2020

WIT

WHATEVER IT TAKES

TRANSMISSION PARTS, INC

2021



TR690

AUTOMATIC TRANSMISSION PARTS CATALOG

@WhateverItTakesTransmission

WWW.WITTRANS.COM

@WITTransmission

1.800.940.0197

SUPERIOR Innovation

Simple 6L80/90 Solutions

GM 6L80/90 Pump Upgrade Kit



PART# STL012

TransLab Engineered® part # STL012 for 6L80/90 Pump Upgrade kit No~Ream™ - "Drop and Go"™ P.R. Valve upgraded seatless design. Addresses over-pressurization which causes major 1234 and 35R drum and piston cracking by lowering failsafe/ brown-out max line to 285 PSI to help prevent high pressure parts breakage! Improved TCC apply, lube and pressure regulation stabilization.

STL-6L80E TransLab Engineered®



PART# STL-6L80

The new TransLab Engineered® 6L80E/6L90E valve body upgrade kit Corrects, Prevents, Upgrades and RETRO-FITS all 6L80/90 GEN1 & GEN2 valve bodies to GEN3 2014- up

•RETRO-FITS GEN1 and GEN2 Type castings to use GEN3 features •Eliminates the need to purchase updated OE style separator plates or castings •Added # 8 check ball and Low-Rev Clutch circuit exhaust control features •Patent pending FLOW~LIMITED™ compensator system circuit technology •Restores integrity to compensator and exhaust backfill circuits thus limits loss of pump volume output "bleed out" •Improves Reverse and Drive engagement especially when HOT •Patent pending compensator valve & circuit design for "NO~YUMP™" 1-2 shift •Includes Corrected* NO~STICK™ Select valves, end plugs and calibrated springs *Superior / TransLab NO~REAM™, Drop~in and GO! ™ Proprietary designed Real~Steel Valves and Sleeves TM

STL010 6L80E/8L90E 14-up Sure-Cool® System

The features and benefits of adding a Sure-Cool® system:

- Full time cooler flow
- Built in safety bypass
- Immediate cooler fill
- Immediate accurate fluid level check without warm-up cycle
- Reduced average operating temperatures
- Increased ATF life
- Reduced risk of overheating
- Reduced risk of planetary damage
- **Patent Pending**



PART# STL010

6L80/6L90 SuperTuff® Shim Kit



PART# K0146

The new K0146 is what you need when finish grinding the 6L family of pump stators. This popular family of GM units includes the 6L45/6L50 and the 6L80/6L90. Our newest Superior Innovation part # K0146 consists of 3 sets of specifically engineered, proprietary design front end play shims to bring your pump back up to specification after being re-cut on a lathe and allows for the total front end play to be adjustable.

Fast install, simple to read and digest charts and instructions for use, make Superior Solutions the builder's choice time and time again. Comes with enough shims to do several units. (3 sets of 3 different sizes) Ask for part# K0146

Our Commitment To Quality & Innovation

At Superior Transmission Parts, we're committed to the continuous development of innovative problem solving products for today's automatic transmissions. From research & development and manufacturing to customer service and shipping, each member of the Superior team is dedicated to providing the best possible quality and service to our customers.

SUPERIOR
TRANSMISSION PARTS, INC.®
THE SIMPLE SOLUTION

VISIT OUR NEW INTERACTIVE WEBSITE:
www.superiortransmission.com

Superior Transmission Parts, Inc. superiortrans1

Phone: 1-800-451-3115 x207 sales
International: 850-574-2369 x207 sales

WIT Branch Locations

To Reach any of our locations toll free, please call

800-940-0197

ARKANSAS

Texarkana
3028 East 19th St.
Texarkana, AR 71854
Phone: (903) 224-7209

ALABAMA

Birmingham
3825 4th Terrace N.
Birmingham, AL 35222
Phone: (205) 592-2309
Fax: (205) 592-2171

Muscle Shoals (Distribution)
2809 Avalon Ave
Muscle Shoals, AL 35661
Phone: (256) 383-9181
Fax: (256) 383-9143

COLORADO

Denver
1221 East 56th/Unit #10
Denver, CO 80216
Phone: (303) 477-2838
Fax: (303) 477-3480

FLORIDA

Ft. Lauderdale
450 W. McNab Road Suite 2
Ft. Lauderdale, FL 33309
Phone: (954) 941-0671
Fax: (954) 941-0674

Orlando
4110 Mercy Industrial Ct.
Orlando, FL 32808
Phone: (407) 522-4417
Fax: (407) 930-5390

Tampa
4771 Distribution Dr.
Tampa, FL 33605
Phone: (813) 247-9202
Fax: (813) 247-9205

GEORGIA

Atlanta
1700B McCoba Drive
Smyrna, GA 30080
Phone: (770) 433-8317
Fax: (770) 433-8931

ILLINOIS

Chicago
5369 Walnut Ave.
Downer's Grove, IL 60515
Phone: (630) 963-1739
Fax: (630) 963-4841

INDIANA

Evansville
509 N. 9th Street
Evansville, IN 47711
Phone: (800) 423-4199
Fax: (812) 426-7382

Indianapolis
1508 S. Keystone Ave.
Indianapolis, IN 46203
Phone: (317) 471-8790
Fax: (317) 426-2683

KENTUCKY

Louisville (Distribution)
300 Hwy 44 East
Shepherdsville, KY 40165
Phone: (502) 955-6035
Fax: (502) 955-6077

LOUISIANA

New Orleans
2631 Delaware Ave
Kenner, LA 70062
Phone: (504) 464-0676

MARYLAND

Baltimore / Washington DC
6700-B Distribution Drive
Beltsville, MD 20705
Phone: (301) 937-3912
Fax: (301) 595-7146

MICHIGAN

Grand Rapids
3765 Broadmoon Ave S.E.
Suite 1
Grand Rapids, MI 49512
Phone: (616) 957-3694
Fax: (616) 957-3928

MINNESOTA

Minneapolis
3765 Dunlap Street N.
Arden Hills, MN 55112
Phone: (651) 484-5080
Fax: (651) 484-5099

MISSISSIPPI

Jackson
618 S. Gallatin St.
Jackson, MS 39204
Phone: (601) 355-0650
Fax: (601) 352-5510

MISSOURI

St. Louis
1525 Fairview Ave.
St. Louis, MO 63132
Phone: (314) 733-0003
Fax: (314) 733-0006

NORTH CAROLINA

Charlotte
1238 Amble Drive
Charlotte, NC 28206
Phone: (704) 716-7272
Fax: (704) 716-7265

Raleigh
6316 J. Richard Dr. Suite B
Raleigh, NC 27617
Phone: (919) 786-2357
Fax: (919) 786-2538

OHIO

Cincinnati
9814 Princeton-Glendale
Cincinnati, OH 45246
Phone: (513) 942-1300
Fax: (513) 942-1334

Cleveland
8515 Freeway Drive Unit A
Macedonia, OH 44056
Phone: (330) 908-1862
Fax: (330) 908-1868

Dayton
1000 Webster St.
Dayton, OH 45404
Phone: (937) 262-7452
Fax: (937) 262-7476

OKLAHOMA

Tulsa
10877 E. 11th Street
Tulsa, OK 74128
Phone: (918) 437-6444
Fax: (918) 437-6446

PENNSYLVANIA

Scranton
220 Clark Road
Duryea, PA 18642
Phone: (570) 655-4200
Fax: (570) 655-0900

TENNESSEE

Knoxville
501 Ambrose Street
Knoxville, TN 37921
Phone: (865) 687-4990
Fax: (865) 687-3745

Nashville
1212 Gallatin Pike
Madison, TN 37115
Phone: (615) 870-0903
Fax: (615) 870-0942

TEXAS

Austin
9503 Brown Lane Building 4
Suite 104
Austin, TX 78754
Phone: (512) 428-6672
Fax: (512) 428-6548

Dallas
9210 King Arthur Drive
Dallas, TX 75247
Phone: (214) 631-1950
Fax: (214) 631-1951

Ft. Worth
6504 Midway Road
Suite 130
Haltom City, TX 76117
Phone: (817) 222-9122
Fax: (817) 222-9709

McAllen
2401 West US Hwy 83
McAllen, TX 78501
Phone:(956)627-0565

Houston
3739 Yale Street
Houston, TX 77018
Phone: (832) 804-9369
Fax: (832) 831-9688

San Antonio
3007 E Commerce Street
San Antonio, TX 78220
Phone: (210) 384-9778
Fax: (210) 384-9104

UTAH

Salt Lake City
788 West 1355 South
Salt Lake City, Utah 84104
Phone: (801) 906-0696

VIRGINIA

Richmond
5383 Glen Alden Drive
Richmond, VA 23231
Phone: (804) 226-7815
Fax: (804) 226-7816

INTERNATIONAL

Samiul Haque
Phone: (502) 955-6035 Ext: 1494
Cell Phone: (502) 489-0141
Email: shaque@wittrans.com

© Whatever It Takes Transmission Parts. Inc.

Welcome to “Whatever It Takes” Transmission Parts

We say **“Whatever It Takes”** is more than our name, it’s our commitment to you! This is why we have spent a lot of time and money in creating what we think is the most complete and the very best looking transmission pictures in our industry. We are proud to offer this catalog to our customers and to our industry. We are also committed to keeping our catalog updated with new transmissions as they come out each year. We hope that you will enjoy using this catalog as much as we have enjoyed developing it.

How To Use This Catalog

Table Of Contents:

Each transmission picture in this catalog is listed in the table of contents. First by the manufacturer, then by the transmission with the page number, description of the transmission and series number.

Pictures:

Most of our transmission pictures are two page layouts with arrows going back and forth, up and down and across pages. The arrows tell you in what direction and how the parts line up in order as they come out of the transmission.

Each picture has a square shaded box on the bottom of the page towards the center of the catalog with a two or three digit number in it. This number is the series number for that transmission. (Example: Allison 1000/2000/2400 has a **116** series number.) Each part has a three digit number with a line from the number to the part. This number is the part number for that part. (Example: Allison 1000/2000/2400 case has a number of **760** for the case.) So, for the Allison 1000/2000/2400 transmission case, the base part number is **116760**.

Part Numbering System:

The number system is the two or three digit series number with the three digit number pointing to the part. (Example: **116760** is the Allison 1000/2000/2400 case.) We also use prefix letters to tell us the manufacturer and suffix letters to tell the different variations of the part.

Disclaimer

All information in this catalog has been checked for accuracy. However, no liability can be assumed for any incomplete or incorrect data.

Copyright

No part of this publication may be reproduced, stored in a retrieval system, transmitted in any form, by any means; electronic, mechanical, photocopying, recording or otherwise, without prior written permission of Whatever It Takes Transmission Parts, Inc.

Table of Contents

General Motors

Transmission	Page#	Description	Series#
Allison 1000/2000/2400	12	RWD 5 & 6 Spd 2001-Up	116000
Aluminum Powerglide	178	RWD 2 Spd 1962-73	103000
Allison AT540/AT543/AT545	194	RWD 4 Spd 1970-Up	111000
AW55-50SN/AW55-51SN (AF23/AF33/RE5F22A)	602	FWD 5 Spd 2000-Up	21000
Cast Iron Powerglide	184	RWD 2 Spd 1950-62	108000
MX17	188	FWD 3 Spd 1985-01	67000
Super Turbine 300	186	RWD 2 Spd 1964-69	105000
125/125C (3T40)	24	FWD 3 Spd 1980-05	64000
180/180C (3L30)	36	RWD 3 Spd 1969-98	24000
200/200C	50	RWD 3 Spd 1976-87	54000
200-4R	52	RWD 4 Spd 1981-90	54000
250/250C/350/350C	66	RWD 3 Spd 1969-86	44000
325	78	FWD 3 Spd 1979-81	54000
325-4L	80	FWD 4 Spd 1982-85	54000
400 (3L80)	90	RWD 3 Spd 1964-Up	34000
4L30E	38	RWD 4 Spd 1989-Up	24000
4L80E / 4L85E	92	RWD 4 Spd 1991-Up	34000
440-T4 (4T60)/4T60E/4T65E	112	FWD 4 Spd 1983-Up	84000
4T40E/4T45E	136	FWD 4 Spd 1995-Up	14000
4T80E	144	FWD 4 Spd 1993-Up	94000
5L40E / 5L50E	200	RWD 5 Spd 2000-Up	144000
6L45/6L50/6L80/6L90	210	RWD 6 Spd 2006-Up	45000
6T40/6T45	522	FWD 6 Spd 2009-Up	46000
6T70/6T75	512	FWD 6 Spd 2007-Up	25000
700R4 (4L60)/4L60E/4L65E/4L70E	152	RWD 4 Spd 1982-Up	74000
8L90	224	RWD 8 Spd 2015-Up	334000

Chrysler

Transmission	Page#	Description	Series#
A340 (AW4)	1144	RWD 4 Spd 1987-Up	97000
A4AF1/A4AF2/A4BF1	784	FWD 4 Spd 1991-Up	42000
A4AF3/A4BF2	782	FWD 4 Spd 1991-Up	42000
A404/A413/A470/A670	282	FWD 3 Spd 1978-Up	32000
A500(40RH/42RH/42RE/44RE)	234	RWD 4 Spd 1988-Up	12000
A518/A618(46RH/46RE/47RH/47RE/48RE)	252	RWD 4 Spd 1990-Up	22000
A604(40TE/41TE)	292	FWD 4 Spd 1989-Up	92000

© Whatever It Takes Transmission Parts. Inc.

Chrysler (Continued)

Transmission	Page#	Description	Series#
A606(42LE)	304	FWD 4 Spd 1995-Up	62000
A727(36RH/37RH)	250	RWD 3 Spd 1962-Up	22000
A904(30RH/31RH/32RH)	232	RWD 3 Spd 1960-Up	12000
AS66RC/AS68RC/AS69RC	334	RWD 6 Spd 2005-Up	172000
F4A33/W4A32/W4A33	786	FWD 4 Spd 1991-Up	42000
KM170-KM177 Series	780	FWD 3 & 4 Spd 1979-Up	42000
ZF4HP18 (Dodge/Eagle)	1332	FWD 4 Spd 1988-92	79000
42RLE	314	RWD 4 Spd 2003-Up	82000
45RFE/5-45RFE/68RFE	270	RWD 4, 5 & 6 Spd 1999-Up	72000
62TE	324	FWD 6 Spd 2007-Up	262000
6F24	842	FWD 6 Spd 2013-Up	211000
722.6	922	RWD 5 Spd 2004-Up	78000
845RE (ZF8HP45)	344	RWD 8 Spd 2011-Up	319000
948TE (ZF9HP48)	350	FWD 9 Spd 2013-Up	339000

Ford

Transmission	Page#	Description	Series#
AOD (FIOD)	426	RWD 4 Spd 1980-93	76000
AODE/4R70W/4R75W/4R70E/4R75E	428	RWD 4 Spd 1992-Up	76000
ATX	446	FWD 3 Spd 1981-Up	66000
AWTF80SC/81SC (AF21/AF40-6)	536	FWD 6 Spd 2005-Up	255000
AXOD/AXODE/AX4S	454	FWD 4 Spd 1986-Up	86000
AX4N/4F50N	456	FWD 4 Spd 1995-Up	86000
A4LD/4R44E/4R55E/5R55E	374	RWD 4 & 5 Spd 1985-Up	56000
CD4E	476	FWD 4 Spd 1994-Up	96000
CFT30	564	FWD CVT	206000
C-3	372	RWD 3 Spd 1974-87	56000
C-4/C-5	362	RWD 3 Spd 1964-86	26000
C-6	404	RWD 3 Spd 1966-Up	36000
E4OD/4R100	406	RWD 4 Spd 1989-Up	36000
FMX/Cruiso/BW 8-12	356	RWD 3 Spd 1951-81	106000
FNR5	488	FWD 5 Spd 2005-Up	138000
Ford 2 Speed	510	RWD 2 Spd 1959-64	146000
F3A	860	FWD 3 Spd 1981-Up	18000
F4A-EL(ECAT-F)	868	FWD 4 Spd 1990-Up	38000
G4A-EL(ECAT-G)	876	FWD 4 Spd 1989-Up	28000
ZF4HP22	1320	RWD 4 Spd 1984-Up	69000
ZF6HP26/26X/28/28X (6R60/6R80)	544	RWD 6 Spd 2005-Up	49000
4F27E (FN4A-EL)	486	FWD 4 Spd 2000-Up	138000
5R110W (Torqshift)	500	RWD 5 & 6 Spd 2003-Up	136000
5R55N/5R55S/5R55W	392	RWD 5 Spd 2000-Up	16000

© Whatever It Takes Transmission Parts. Inc.

6T30/6T40/Hybrid/6T45/6T50/6F35 ..... 522 ..... FWD 6 Spd 2009-Up 46000
6F50/6F55/6T70/6T75 ..... 512 ..... FWD 6 Spd 2007-Up 25000
6R140 ..... 556 ..... RWD 6 Spd 2001-Up 236000

Aisin Warner / Borg Warner

Transmission	Page#	Description	Series#
450-43LE(Aisin Seiki)	582	RWD 4 Spd 1998-Up	141000
AW55-50SN / AW55-51SN (AF23/AF33/RE5F22A)	602	FWD 5 Spd 2000-Up	21000
BW35TB / BW37TB	578	FWD 3 Spd 1968-92	104000
T-35	576	RWD 3 Spd 1962-76	119000
T-65/T-66	570	RWD 3 Spd 1974-Up	29000
50-40 / 50-42LE	588	FWD 4 Spd 1992-Up	89000
60-40LE / 42LE / 41SN	596	FWD 4 Spd 1995-Up	121000
BW8-12	356	RWD 3 Spd 1951-81	106000

Honda / Acura

Transmission	Page#	Description	Series#
AJ/AK	614	FWD 3 Spd 1980-82	150000
AK/AS/CA/F4/G4/K4/L4/L5/P1/ PL5X/MY8A/PY8A	618	FWD 4 Spd 1983-91	60000
AOYA/APXA/APX4/A6VA/BOYA/MP1A/ MPJA/MPOA/MPXA/(MPWA ACCORD) /PX4B	634	FWD 4 Spd 1990-97	80000
S24A / A24A / M24A / MDLA / MDMA / M4TA / MP7A / SP7A / S4XA / SKWA	644	FWD 4 Spd 1992-Up	90000
A4RA/B4RA/B46A/BDRA/BMXA/M4RA/ S4RA/SLXA	646	FWD 4 Spd 1996-Up	90000
BAXA/MAXA/B6VA/M6HA/MDWA/ MPZA	660	FWD 4 Spd 1997-Up	30000
B7TA/B7VA/B7XA/B7YA/M7ZA	672	FWD 4 Spd 1997-Up	20000
BAYA/BDGA-6/BDGA-7/BDGA-8/BGFA/ BGHA/BVGA-5/BVGA-6/BVGA-7/ BYBA/B7WA/MAYA/MFYA/MGFA/ MGHA/MGSA/M7WA	674	FWD 5 Spd 2000-Up	20000
BCLA/BZHA/BZJA/BZKA-1/BZNA/B90A/ GPLA/GPPA-3/GPPA-4/MCLA/MCTA/ MKYA/MKZA/MM7A/MNZA/MRMA/ MZHA/MZJA/MZKA-5/MZKA-6/ MZKA-7/MZKA-8/M91A	746	FWD 5 Spd 2003-Up	160000

© Whatever It Takes Transmission Parts. Inc.

Honda / Acura (Continued)

Transmission	Page#	Description	Series#
BDGA-1/BDGA-9/BDHA/BDKA/BJFA/BK3A/ BK4A/BVGA-8/BVLA/BWEA/BFYA/B36A/ B97A/MDKA/MDPA/MDRA/MJBA/MJFA/ MM2A/MURA/MYFA/PN3A/PN4A/PSFA/ PVGA/PVLA/P34A/P35A/P36A	718	FWD 5 Spd 2003-Up	40000
BZKA-5/BZKA-6/BZKA-7/BZKA-8/GPPA-2/ MCVA/MRVA/MZKA-1/MZKA-2/MZKA-3/ MZKA-4	734	FWD 4 Spd 2002-06	50000
BRZA/GNBA/MP5A/MPCA/M5PA/MZ2A/ SMMA/SPCA/SP5A	766	RWD 5 SPD 2006-11	180000
M4VA/MYLA/SLYA	714	FWD CVT 1996-00	140000
MPRA/RO	706	FWD 4 Spd 1990-93	170000
MPWA (Vigor)/M1WA (INLINE)	694	FWD 4 Spd 1992-95	70000
MPYA/M5DA/M5HA (INLINE)	696	FWD 4 Spd 1991-95	70000
MR9A	716	FWD 4 Spd 1991-01	190000
4L30E	38	RWD 4 Spd 1989-Up	24000
Honda 2 Speed	715	FWD 2 SPD 1973-80	178000
ZF9HP48 (948TE)	350	FWD 9 Spd 2013-Up	339000

Hyundai / Mitsubishi

Transmission	Page#	Description	Series#
42RLE	314	RWD 4 Spd 2003-Up	82000
5-45RFE	270	RWD 4, 5 & 6 Spd 1999-Up	72000
450-43LE(Aisin Seiki)	582	RWD 4 Spd 1998-Up	141000
A4CF1/A4CF2	810	FWD 4 Spd 2006-Up	41000
A4AF3/A4BF2	782	FWD 4 Spd 1991-Up	42000
A4AF1/A4AF2/A4BF1	784	FWD 4 Spd 1991-Up	42000
A500	234	RWD 4 Spd 1988-Up	12000
A6GF/A6LF/A6MF/6F24	842	FWD 6 Spd 2010-Up	211000
A8LR1/A8TR1	854	RWD 8 Spd 2012-Up	331000
Allison 1000/2000/2400	12	RWD 5 & 6 Spd 2001-Up	116000
Allison AT540/AT543/AT545	194	RWD 4 Spd 1970-Up	111000
KM170/171/172/175/177/171-5/172-5/ 175-5/176-5/177-8/F3A21/F3A22/ F4A21/F4A22/F4A23	780	FWD 3 & 4 Spd 1979-Up	42000
F4A33/W4A32/W4A33	786	FWD 4 Spd 1991-Up	42000
F4A41/F4A4B/F4A42/W4A42/F4A51/ W4A51/W4A5A/F5A51/A5HF1	808	FWD 4 & 5 Spd 1997-Up	41000
R4A51/V4A51/R5A51/V5A51	834	RWD 4 & 5 Spd 1999-Up	142000

© Whatever It Takes Transmission Parts. Inc.

Mazda

Transmission	Page#	Description	Series#
6F55	512	FWD 6 Spd 2007-Up	25000
A4LD/4R44E/4R55E/5R55E	374	RWD 4 & 5 Spd 1985-Up	56000
AWTF81SC	536	FWD 6 Spd 2005-Up	255000
CD4E(LA4A-EL)	476	FWD 4 Spd 1994-Up	96000
F3A	860	FWD 3 Spd 1981-Up	18000
F4A-EL (ECAT-F)/F4E/F4EAT	868	FWD 4 Spd 1990-Up	38000
FN4A-EL(4F27E)	486	FWD 4 Spd 1999-Up	138000
FNR5	488	FWD 5 Spd 2005-Up	138000
FW6A-EL	900	FWD 6 Spd 2012-Up	238000
G4A-EL (ECAT-G)/GF4A-EL	876	FWD 4 Spd 1986-Up	28000
JF506E (JA5A-EL / 09A)	888	FWD 5 Spd 2002-Up	183000
JR403E (RG4RO1A)	950	RWD 4 Spd 1988-Up	73000
R4A-EL (RE4RO1A)	948	RWD 4 Spd 1990-Up	73000
3N71B/4N71B(N4A-EL)	938	RWD 3 & 4 Spd 1974-Up	53000

Mercedes

Transmission	Page#	Description	Series#
722.0/722.1/722.2	908	RWD 3 & 4 Spd 1970-80	58000
722.3/722.4/722.5	914	RWD 4 & 5 Spd 1981-97	68000
722.6	922	RWD 5 Spd 1996-Up	78000
722.9	932	RWD 7 Spd 2004-Up	288000

Nissan / Infiniti

Transmission	Page#	Description	Series#
AW55-50SN	602	FWD 5 Spd 2000-Up	21000
RE4FO3V/RE4FO4V/4F20E/JF403E	994	FWD 4 Spd 1992-Up	83000
RE5R05A	964	RWD 5 Spd 2002-Up	173000
RE0F08A (JF009E)	1008	FWD CVT 2007-Up	243000
RE0F08B (JF009E)	1010	FWD CVT 2007-Up	243000
RE0F09A/RE0F09B (JF010E)	1018	FWD CVT 2003-Up	203000
RE0F10A (JF011E)	1026	FWD CVT 2007-14	212000
RE0F10D (JF016E)	1036	FWD CVT 2013-Up	333000
RE0F10E (JF017E)	1044	FWD CVT 2013-Up	343000
RE0F10J (JF019E)	1046	AWD CVT 2014-Up	343000
RE0F11A (JF015E)	1054	FWD CVT 2012-Up	323000
RG4RO1A/JR403E	950	RWD 4 Spd 1988-Up	73000
RL3FO1A/RN3FO1A	976	FWD 3 Spd 1981-92	43000
RL4FO2A/RE4FO2A	982	FWD 4 Spd 1985-Up	93000

© Whatever It Takes Transmission Parts. Inc.

Nissan / Infiniti (Continued)

Transmission	Page#	Description	Series#
RL4FO3A/RE4FO3A/RE4F03B/ RE4FO4A/RE4F04B	992	FWD 4 Spd 1990-Up	83000
RL4RO1A/RE4RO1A/RE4RO3A	948	RWD 4 Spd 1987-Up	73000
L3N71B/L4N71B/E4N71B (Jatco)	938	RWD 3 & 4 Spd 1972-Up	53000

Renault

Transmission	Page#	Description	Series#
AR4	1068	FWD 4 Spd 1988-Up	152000
MB1/MB3/MJ3	1062	FWD 3 Spd 1983-Up	52000

Saturn

Transmission	Page#	Description	Series#
4T40E/4T45E	136	FWD 4 Spd 1995-Up	14000
6T70/6T75	512	FWD 6 Spd 2007-Up	25000
AW55-50SN/AW55-51SN (AF23/AF33/RE5F22A)	602	FWD 5 Spd 2000-Up	21000
TAAT	1070	FWD 4 Spd 1991-Up	10000
VT20/VT25-5	1078	FWD CVT 2004-Up	205000

Subaru

Transmission	Page#	Description	Series#
ECVT	1104	FWD CVT 1989-94	133000
EC8(4EAT)/REAXEL 87-98	1092	FWD 4 Spd 1987-98	23000
EC8(4EAT)/REAXEL 99-Up	1094	FWD 4 Spd 1999-Up	23000
M41/M41A	1084	FWD 3 Spd 1975-94	13000
TR690	1108	FWD CVT 2009-Up	353000
TR580	1116	FWD CVT 2010-Up	163000
5EAT	1124	FWD/AWD 5 Spd 2005-Up	123000

Toyota / Lexus

Transmission	Page#	Description	Series#
A130/A131/A132	1168	FWD 3 Spd 1984-Up	67000
A140/A141/A142	1170	FWD 4 Spd 1983-Up	67000

© Whatever It Takes Transmission Parts. Inc.

A240/A241/A242/A243/A244/A245/ A246/A247	1172	FWD 4 Spd 1985-Up	67000
A340/A341/A343	1144	RWD 4 Spd 1985-Up	97000
A40/A40D/A41/A42D/A42DL/A43/ A43D/A43DE/A43DL/A44D/ A44DL/A45DF/A45DL/A46DE	1132	RWD 3 & 4 Spd 1973-Up	57000
A440F/A442F	1162	RWD 4 Spd 1988-Up	141000
A540/A541E	1184	FWD 4 Spd 1988-Up	87000
A55 (Tercel)	1194	FWD 3 Spd 1979-Up	157000
A650E	1230	RWD 5 Spd 1998-Up	187000
A750	1256	RWD 5 Spd 2002-Up	117000
A761	1258	RWD 6 Spd 2006-Up	117000
A960E	1238	RWD 6 Spd 2006-Up	267000
AB60E	1268	RWD 6 Spd 2007-Up	77000
AW80-40LE/81-40LE/U440E	1220	FWD 4 Spd 2004-Up	137000
R150 (Automatic Transfer Case)	1158	RWD 1985-Up	197000
U140/U240/U241/U250	1196	FWD 4 Spd 1999-Up	167000
U150/U151/U250	1198	FWD 5 Spd 2001-Up	167000
U340E/U340F/U341E/U341F	1212	FWD 4 Spd 1991-98	127000
U660E/U760E	1246	FWD 6 Spd 2007-Up	277000
AA80E/AA80F/AA81E/AA81F	1276	RWD 8 Spd 2007-Up	287000

VW / Audi

Transmission	Page#	Description	Series#
003 (2 Band Type)	1302	Transaxle 3 Spd 1969-75	165000
010(087/089/090)	1284	Transaxle 3 Spd 1975-Up	65000
AG4 (095 / 096 / 01M)(098 / 01P)	1290	FWD 4 Spd 1990-Up	75000
AG4 (097 / 01N)	1292	FWD 4 Spd 1991-98	75000
AWTF60SN (09G/09M/6F21WA)			
AWTF62SN (09K)	1312	FWD 6 Spd 2003-Up	265000
AWTR60SN	1304	FWD 6 Spd 2002-Up	235000
JF506E (JA5A-EL / 09A)	888	FWD 5 Spd 2002-Up	183000
ZF4HP18FLA/FLE	1332	FWD 4 Spd 1986-96	79000
ZF4HP24	1320	RWD 4 Spd 1984-Up	69000
ZF5HP19FL/FLA	1356	FWD/RWD 5 Spd 1996-Up	175000
ZF5HP24A	1368	RWD/AWD 5 Spd 1997-Up	185000
ZF6HP26A / ZF6HP28A	544	RWD 6 Spd 2005-Up	49000
ZF8HP55	1396	RWD/AWD 8 Spd 2010-Up	309000

© Whatever It Takes Transmission Parts. Inc.

ZF

Transmission	Page#	Description	Series#
ZF4HP14 (Puegeot)	1330	FWD 4 Spd 1989-94	79000
ZF4HP16	1344	FWD 4 Spd 2004-06	145000
ZF4HP18 (Eagle/Dodge)	1332	FWD 4 Spd 1986-96	79000
ZF4HP18 (Saab)	1334	FWD 4 Spd 1986-94	79000
ZF4HP22/ZF4HP24	1320	RWD 4 Spd 1984-Up	69000
ZF8HP55AF	1396	RWD/AWD 8 Spd 2010-Up	309000
ZF5HP18	1352	FWD 5 Spd 1991-96	179000
ZF5HP19	1354	FWD/RWD 5 Spd 1996-Up	175000
ZF5HP19FL/ZF5HP19FLA (Audi/VW)	1356	FWD/RWD 5 Spd 1996-Up	175000
ZF5HP24	1368	RWD/AWD 5 Spd 1997-Up	185000
ZF5HP30	1376	RWD 5 Spd 1991-01	159000
ZF6HP19/19X/21	1384	RWD 6 Spd 2004-Up	209000
ZF6HP19X	1386	AWD 6 Spd 2004-Up	209000
ZF6HP26 (6R60)	544	RWD 6 Spd 2005-Up	49000
ZF8HP45 (845RE)	344	RWD 8 Spd 2011-Up	319000
ZF9HP48 (948TE)	350	FWD 9 Spd 2013-Up	339000

Miscellaneous Items

Description	Page#
Assembly Lubricants	1423
Cleaners	1422
Cooler Adapter/Fittings/Accessories	1418
Coolers	1419
Cup/Orifice Plugs	1412
Electrical	1421
Filters (Chrysler Miscellaneous)	1405-1406
Filters (Ford Miscellaneous)	1407
Filter (Foreign Miscellaneous)	1409
Filters (General Motors Miscellaneous)	1404
Filters (Honda Miscellaneous)	1408
Filters (Toyota Miscellaneous)	1408
Gloves	1422
Grommets	1411
Inline Filters	1410
Light Bulbs	1422
Lubeguard Products	1425
Other Products	1426
Output Shaft Seals	1413
Paint / Markers	1421
Pins & Clips	1413
Pressure Riser	1420

© Whatever It Takes Transmission Parts. Inc.

Silicone & Gasket Maker 1420
Smart Blend (Life Automotive) Products 1426
Speed-O's Drive (General Motors) 1415-1416
Speed-O Drive Gear Clips (General Motors) 1416
Speed-O's Driven (General Motors) 1417
Thread Locker & Repair 1423
Tools 1428-1431
Torque Converter Nuts & Bolts 1414
Transfer Case Gaskets 1427
Transmission Fluid 1424
Vaccum T's, Clamps & Hoses 1410
Vent Tubes 1414

Vendor Ads

Description	Page#

Alto 745
Borg Warner 403
Federal Industrial 833
Raybestos Powertrain 23
Raybestos Powertrain 563
Rostra Powertrain 975
Seal Aftermarket Products ..... Inside Back Cover
Seal Aftermarket Products/Toledo 323
Seal Aftermarket Products/TTK 499
Sonnax ..... Back Cover
Superior Transmission Parts ..... Inside Front Cover
Superior Transmission Parts 1452
Teckpak-Fitzall 1432-1438
Transgo 223
Transgo 281
Transgo 333
Transgo 509

© Whatever It Takes Transmission Parts. Inc.

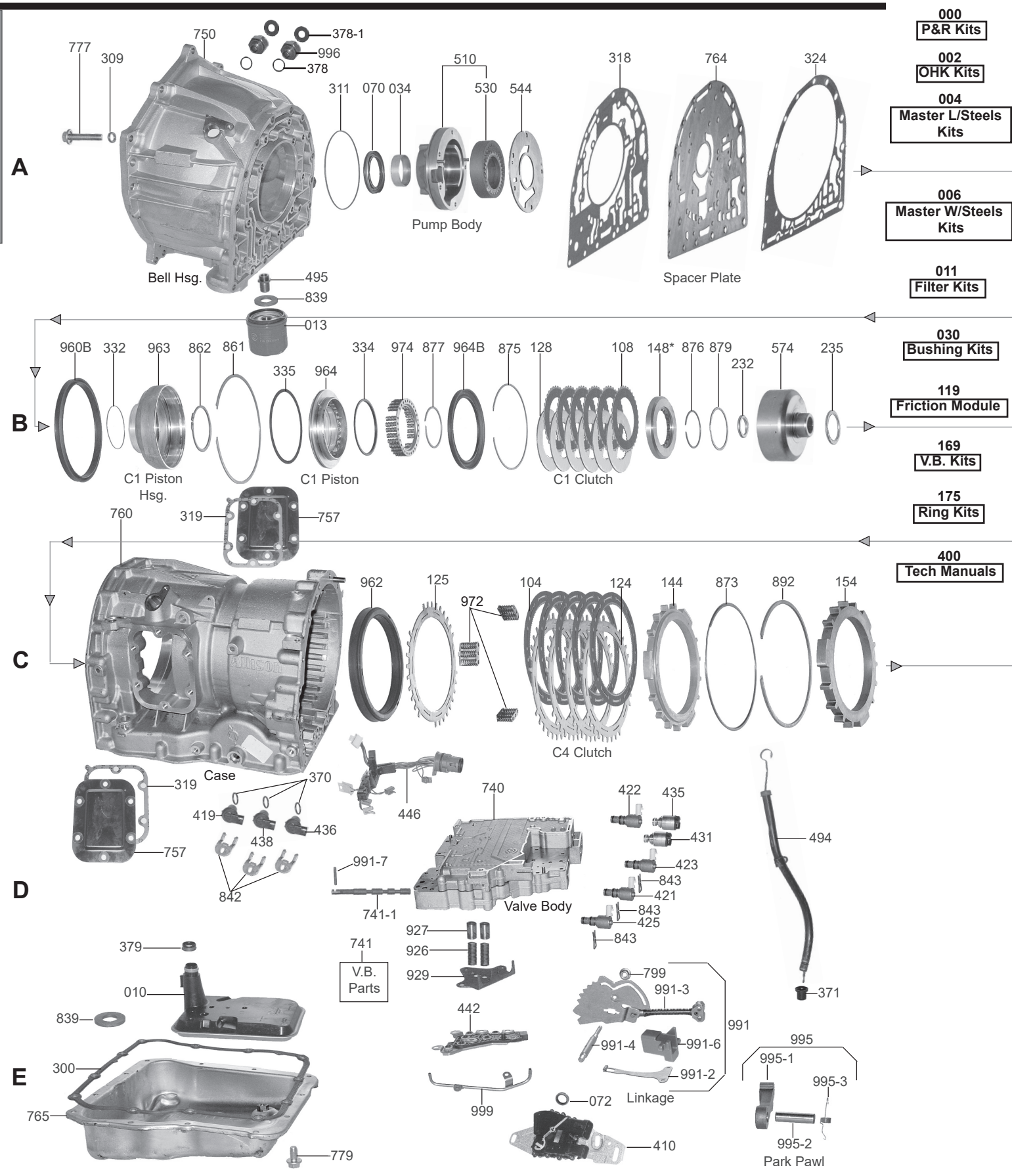

000 P&R Kits

002 OHK Kits

004 Master L/Steels Kits

006 Master W/Steels Kits

011 Filter Kits

030 Bushing Kits

119 Friction Module

169 V.B. Kits

175 Ring Kits

400 Tech Manuals

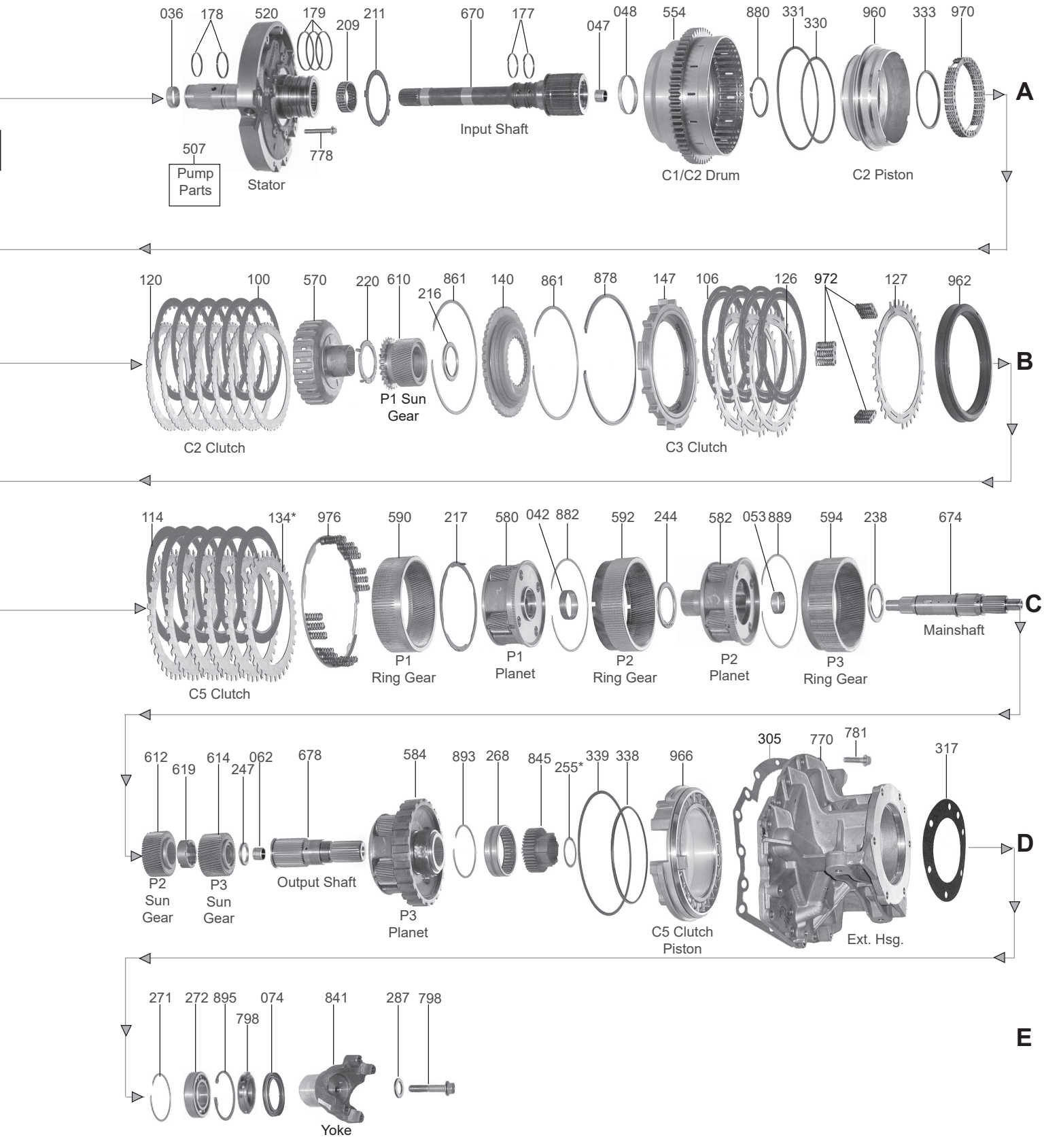

© Whatever It Takes Transmission Parts. Inc.

PART #	PAPER & RUBBER KIT	QTY.	REFERENCE #
116000A	Paper & Rubber Kit, 1000/2000 Allison 5 Speed 2000-Up	1	

PART #	OVERHAUL KITS	QTY.	REFERENCE #
116002A	Overhaul Kit, 1000/2000/2400 Allison (Without Bonded Pistons) 2000-09	1	
116002AHP	Overhaul Kit, 1000/2000/2400 Allison (Without Bonded Pistons) 2000-Up (Hi Performance)	1	
116002AP	Overhaul Kit, 1000/2000/2400 Allison (With Bonded Pistons) 2000-05	1	29541007D
116002AAP	Overhaul Kit, 1000/2000/2400 Allison (4th Generation)(With Bonded Pistons) 2006-09	1	
116002ABP	Overhaul Kit, 1000/2000/2400 Allison (5th Generation)(With Bonded Pistons) 2009-Up	1	

PART #	MASTER L/STEEL KIT	QTY.	REFERENCE #
116004A	Master L/Steels Kit, 1000/2000/2400 Allison (Without Bonded Pistons) 2000-05	1	
116004AP	Master L/Steels Kit, 1000/2000/2400 Allison (With Bonded Pistons) 2000-05	1	
116004AAP	Master L/Steels Kit, 1000/2000/2400 Allison (With Bonded Pistons) 2006-Up	1	
116004ABP	Master L/Steels Kit, 1000/2000/2400 Allison (With Bonded Pistons) 09/2009-Up	1	

PART #	MASTER W/STEEL KIT	QTY.	REFERENCE #
116006A	Master W/Steels Kit, 1000/2000/2400 Allison (Without Bonded Pistons) 2000-Up	1	
116006AP	Master W/Steels Kit, 1000/2000/2400 Allison (With Bonded Pistons) 2000-05	1	
116006AAP	Master W/Steels Kit, 1000/2000/2400 Allison (With Bonded Pistons) 2006-Up	1	
116006ABP	Master W/Steels Kit, 1000/2000/2400 Allison (With Bonded Pistons) 09/2009-Up	1	

PART #	FILTER	QTY.	REFERENCE #
116010A	Filter, 1000/2000 Allison 2WD & 4x4 (Shallow Pan) (Black) 2001-E06	1	29537965
116010AA	Filter, 1000/2000 Allison Shallow Pan (2nd Design) L2006-Up (Black)(Overall Height (Neck & Body) Is 4.630" Tall)	1	
116010B	Filter, 1000/2000 Allison 4x4 2001-09 (Deep Pan)(White)(Overall Height (Neck & Body) Is 5.120" Tall)	1	29537966
116010BA	Filter, 1000/2000 Allison 4x4 2010-Up (White)(2nd Design)(Overall Height (Neck & Body) Is 5.120" Tall)	1	

PART #	FILTER KIT	QTY.	REFERENCE #
116011A	Filter Kit, 1000/2000 Allison 2WD & 4x4 (Shallow Pan) (Black) 2000-Up	1	
116011B	Filter Kit, 1000/2000 Allison 4x4 (Deep Pan) (White) 2000-Up	1	

PART #	MISC. FILTERS	QTY.	REFERENCE #
116013A	Filter, 1000 Allison (Spin On) External 2000-Up	1	29531007

PART #	BUSHINGS	QTY.	REFERENCE #
116030A	Bushing Kit, 1000/2000 Allison (7 Bushings) 2000-Up	1	
116034A	Bushing, 1000/2000 Allison Pump Body 2000-Up	1	29536703
116034AD	Bushing, 1000/2000 Allison Pump Body (Enhanced W/CT-101 Dry Lubricant)(W/Indents For Better Oil Retention) 2000-Up	1	
116036A	Bushing, 1000/2000 Allison Stator (Front) 2000-Up	1	
116042A	Bushing, 1000/2000 Allison P1 Planet (1.990"ID) 2000-Up	1	
116047A	Bushing, 1000/2000 Allison Input Shaft (Rear) (.790"ID) 2000-Up	1	
116048A	Bushing, 1000/2000 Allison C1/C2 Drum 2000-Up	1	
116053A	Bushing, 1000/2000 Allison P2 Planet (1.440"ID) 2000-Up	1	
116062A	Bushing, 1000/2000 Allison Output Shaft Pilot (.793"ID) 2000-Up	1	

PART #	METAL CLAD SEALS	QTY.	REFERENCE #
116070A	Seal, 1000/2000 Allison Front (Pump) 2000-Up	1	29536299
44072	Seal, 1000/2000 Allison Manual Lever 2000-Up	1	8623056
116074A	Seal, 1000/2000 Allison Rear 2WD & 4x4 2000-Up	1	29536379

PART #	FRICTION CLUTCH	QTY.	REFERENCE #
116100A	Friction, 1000/2000 Allison C2 Clutch (.098")(24 Teeth) 2000-Up	6	29530313
116100AH	Friction, 1000/2000 Allison C2 Clutch (GPZ)(.079")(24 Teeth) 2000-Up	6	
116100AHP	Friction, 1000/2000 Allison C2 Clutch (.105")(24 Teeth)(High Performance) 2000-Up	6	
116100AHPPK	Friction/Steel Kit,Allison 1000/2000 C2 Clutch (GPZ) 1999-Up (Raybestos Torqkit)	1	

© Whatever It Takes Transmission Parts. Inc.

116100APPK	Friction/Steel Kit, 1000/2000 Allison C2 Clutch 2000-05 (Alto Powerpack)	1		
116100AAPPK	Friction/Steel Kit, 1000/2000 Allison C2 Clutch 2006-Up (Alto Powerpack)	1		
116100ABHP	Fri, 1000/2000 Allison C2 Clu (.073")(24T)(7.50"OD)(G3 Material)(Internal Spline) 1999-09	6		
116100ABPPK	Friction/Steel Kit, 1000/2000 Allison C2 Clutch 1999-On (Alto G3 Powerpack)	1		
116100AZPK	Friction/Steel Kit, 1000/2000 Allison C2 Clutch "Z Pak" 2000-Up	1		
116104A	Friction, 1000/2000 Allison C4 Clutch (098")(117 Teeth)(8 11/16"OD)(Has 11 Slots In The Lining) 2000-Up (Also Fits C3 Clutch #106)	4-9		29531049
116104AHP	Friction, 1000/2000 Allison C4 Clutch (.098")(8 11/16"OD)(Has 11 Slots In The Lining) (High Performance) 2000-Up (Also Fits C-3 Clutch # 106)	4-9		
116104AHPPK	Friction/Steel Kit, Allison 1000/2000 C4 Clutch (GPZ) 1999-2010 (Raybestos Torqkit)	1		
116104AA	Friction, 1000/2000 Allison C4 Clutch (.072")(117 Teeth)(8.670"OD)(Waved) 2010-On (Also Fits 1000/2000 Allison C3 Clutch)	4-9		
116104AAHP	Friction, 1000/2000 Allison C4 Clutch 1999-Up (GPZ)(Also Fits C3 Clutch #106)	4-9		
116104AAHPPK	Friction/Steel Kit, Allison 1000/2000 C4 Clutch (GPZ) 2011-Up (Raybestos Torqkit)	1		
116104APPK	Friction/Steel Kit, 1000/2000 Allison C4 Clutch 2000-05 (Alto Powerpack)	1		
116104AAPPK	Friction/Steel Kit, 1000/2000 Allison C4 Clutch 2006-Up (Alto Powerpack)	1		
116104APPPK	Friction/SteelKit, Allison 1000/2000 C4 Clutch (GPZ) 1999-2010 (Pro Series)(Raybestos Torqkit)	1		
116104AB	Friction, 1000/2000 Allison C4 Clutch (.070") 12/2009-Up (Also Fits C3 Clutch #106)	4-9		
116104ABHP	Friction, 1000/2000 Allison C4 Clutch (.085"Thick)(24 Teeth)(8.670"OD)(Internal Spline) (Hi Performance G3 Material) 1999-09 (Also Fits 1000/2000 Allison C3 Clutch 1999-09)	4-9		
116104ABPPK	Friction/Steel Kit, 1000/2000 Allison C4 Clutch 1999-Up (G3 Powerpack)	1		
116104BPPK	Friction/Steel Kit, 1000/2000 C4 Clutch (Stage 1) 2000-Up (Frictions Are .078" Thick)(Contains Frictions And Steels)	1		
116104BS1	Friction, 1000/2000 Allison C4 Clutch (.078")(8 11/16"OD) 2000-Up (Stage 1) (Also Fits C3 Clutch #106)	4-9		
116106A	Friction, 1000/2000 Allison C3 Clutch .097" 2000-Up (Use 116104A)	4		29531049
116106AHPPK	Friction/Steel Kit, Allison 1000/2000 C3 Clutch (GPZ) 1999-2010 (Raybestos Torqkit)	1		
116106APPK	Friction/Steel Kit, 1000/2000 Allison C3 Clutch 2000-05 (Alto Powerpack)	1		
116106AAPPK	Friction/Steel Kit, 1000/2000 Allison C3 Clutch 2006-Up (Alto Powerpack)	1		
116106APPPK	Friction/Steel Kit, Allison 1000/2000 C3 Clutch (GPZ) 1999-2010 (Pro Series)(Raybestos Torqkit)	1		
116106AAHPPK	Friction/Steel Kit, Allison 1000/2000 C3 Clutch (GPZ) 2011-Up (Raybestos Torqkit)	1		
116106AAPPPK	Friction/Steel Kit, Allison 1000/2000 C3 Clutch (GPZ)(Pro Series)(Raybestos Torqkit)	1		
116106ABPPK	Friction/Steel Kit, 1000/2000 Allison C3 Clutch 1999-Up (G3 Powerpack)	1		
116106BPPK	Friction/Steel Kit, 1000/2000 Allison C3 Clutch (Stage 1) 2000-Up (Frictions Are .078" Thick) (Contains Frictions And Steels)	1		
116108A	Friction, 1000/2000 Allison C1 Clutch (.098")(36 External Teeth)(3.230"ID) 1999-09	6		29530312
116108AHP	Friction, 1000/2000 Allison C1 Clutch (36 External Teeth) 1999-Up (Must Be Used With 116128AHP)(GPZ)	6		
116108AHPPK	Friction/Steel Kit, Allison 1000/2000 C1 Clutch (GPZ) 1999-Up (Raybestos Torqkit)	1		
116108APPK	Friction/Steel Kit, 1000/2000 Allison C1 Clutch 2000-Up (Alto Powerpack)	1		
116108AAHP	Friction, 1000/2000 Allison C1 Clutch (.071")(36 External Teeth) 2010-Up	7		
116108AAPPK	Friction/Steel Kit, 1000/2000 Allison C1 Clutch 2006-Up (Alto Powerpack)	1		
116108AB	Friction, 1000/2000 Allison C1 Clutch (.070")(36 Teeth)(5.065"OD) 12/09-Up (High Energy)	7		
116108ABPPK	Friction/Steel Kit, 1000/2000 Allison C1 Clutch 1999-On (G3 Powerpack)	1		
116114A	Friction, 1000/2000 Allison C5 Clutch (.105")(115 Teeth)(8 11/16"OD) 2000-Up	6		29537393
116114ABPPK	Friction/Steel Kit, 1000/2000 Allison C5 Clutch 1999-Up (G3 Powerpack)	1		
116114AHP	Friction, 1000/2000 Allison C5 Clutch (.105")(115 Teeth)(8 11/16"OD)(Hi-Performance) 2000-Up.	6		
116114APPK	Friction, 1000/2000 Allison C5 Clutch 2000-Up (Alto Powerpack)	6		
116114AS1	Friction, 1000/2000 Allison C5 Clutch (.105")(115 Teeth)(8 11/16"OD)(Stage 1, Red) 2000-Up	6		
116119A	Friction Module, 1000/2000 Allison 2000-09	1		
116119AB	Friction Module, 1000/2000 Allison 12/2009-Up	1		
116119AS1	Friction Module, 1000/2000 Allison (Stage 1) 2000-Up	1		

PART #	STEEL CLUTCH	QTY.	REFERENCE #
116120	Steel, 1000/2000 Allison C2 Clutch .067" (42 Teeth) 2000-Up	7	29530315
116120A	Steel, 1000/2000 Allison C2 Clutch .086" (42 Teeth) 2000-Up	7	
116124A	Steel, 1000/2000 Allison C4 Clutch .098" (27 Teeth) 7 1/8"ID (Has 11 Slots In Flat Surface 2000-Up (Also Fits 1000/2000 Allison C3 Clutch #126)	3-7	29531048
116124AA	Steel, 1000/2000 Allison C4 Clutch (.079")(Alternate Selective)	1	
116125A	Steel, 1000/2000 Allison C4 Clutch (Front) .125" (27 Narrow Teeth & 3 Wide Teeth) 11 Slots In The Flat Surface) 7 1/8"ID (1st Design) The Return Springs #972 Snap On The Wide Teeth (Also Fits C3 Clutch #127) 2000-Up	1-2	
116125AA	Steel, 1000/2000 Allison C4 Clutch (Front) .125" (27 Narrow Teeth & 3 Wide Teeth) 14 Slots In The Flat Surface (7 1/8"ID) 2nd Design (The Return Springs #972 Snap On The Wide Teeth) Also Fits C3 Clutch #127) 2000-Up	1-2	29532192
116126A	Steel, 1000/2000 Allison C3 Clutch .098" (27 Teeth) 2000-Up (Use 116124A)	3	29531048
116127A	Use 116125A Or 116125AA	1	29532192
116128A	Steel, 1000/2000 Allison C1 Clutch .086" (34 Teeth) (Internal Teeth) 2000-Up	6	29530314

© Whatever It Takes Transmission Parts. Inc.

PART #	STEEL CLUTCH (Continued)	QTY.	REFERENCE #
116128AHP	Friction, 1000/2000 Allison C1 Clutch 1999-Up (Internal Teeth)(Must Be Used With 116108AHP) (GPZ)	6	
116134	Steel, 1000/2000 Allison C5 Clutch .078" (36 Teeth) 2000-Up	6	
116134A	Steel, 1000/2000 Allison C5 Clutch .098" (36 Teeth) 2000-Up	6	
116134AA	Steel, 1000/2000 Allison C5 Clutch .102" (36 Teeth) 2000-Up	6	
116134AB	Steel, 1000/2000 Allison C5 Clutch .108" (36 Teeth) 2000-Up	6	
116134B	Steel, 1000/2000 Allison C5 Clutch .118" (36 Teeth) 2000-Up	6	
116137PPK	Friction/Steel Kit, 1000/2000/2400 Allison 1999-Up (G3 Material)(Contains: C1, C2, C3, C4, And C5 Powerpacks)	1	

PART #	CLUTCH PRESSURE PLATES	QTY.	REFERENCE #
116140A	Pressure Plate, 1000/2000 Allison C2 Clutch (.253" Thick At Edge)(39 Teeth, 3 Are Wider) (26 Inner Splines) 2000-Up	1	29531094
116144A	Pressure Plate, 1000/2000 Allison C4 Clutch (.615" Thick) 12 Narrow Teeth & 3 Wide Teeth 2000-Up	1	29535640
116146A	Pressure Plate, 1000/2000 Allison C3 Clutch (Bottom) 2000-Up	1	
116147A	Pressure Plate, 1000/2000 Allison C3 Clutch (Top) .690" (12 Narrow Teeth & 3 Wide Teeth) 6 Rivits & 3 Plastic Strips 2000-Up	1	29535648
116148AA	Pressure Plate, 1000/2000 Allison C1 Clutch (5.60mm) 17 Internal Teeth (4.725"OD) 2000-Up	1	29542420
116148AB	Pressure Plate, 1000/2000 Allison C1 Clutch (5.90mm) 17 Internal Teeth (4.725"OD) 2000-Up	1	29542421
116148AC	Pressure Plate, 1000/2000 Allison C1 Clutch (6.30mm) 17 Internal Teeth (4.725"OD) 2000-Up	1	29542422
116148AD	Pressure Plate, 1000/2000 Allison C1 Clutch (6.80mm) 17 Internal Teeth (4.725"OD) 2000-Up	1	29542423
116148AE	Pressure Plate, 1000/2000 Allison C1 Clutch (7.30mm) 17 Internal Teeth (4.725"OD) 2000-Up	1	29542424
116154A	Pressure Plate, 1000/2000 Allison C5 Clutch (.707") 12 Narrow Teeth & 3 Wide Teeth 2000-Up	1	29531058

PART #	VALVE BODY KITS	QTY.	REFERENCE #
T116167C	Shift Kit, 1000/2000 Allison (6 Speed)(Junior) 2005-Up (Transgo)	1	
T116169A	Shift Kit, 1000/2000/2400 Allison (Heavy Duty) 2001-04 (Transgo)	1	

PART #	OIL SEALING RINGS	QTY.	REFERENCE #
116175AV	Ring Kit, 1000-2000 Allison (Vespel) 2000-Up	1	
116177AV	Ring, 1000/2000 Allison Input Shaft (Vespel) 2000-Up	2	29536405
116178AV	Ring, 1000/2000 Allison Stator Shaft (Front) (Vespel) 2000-Up	1	
116178BV	Ring, 1000/2000 Allison Stator Shaft (Center) (Vespel) 2000-Up	1	
116179AV	Ring, 1000/2000 Allison Stator To C1/C2 Drum (Rear) (Vespel) 2000-Up	3	29538940

PART #	WASHERS & BEARINGS	QTY.	REFERENCE #
116201A	Bearing Kit, 1000/2000 Allison 2000-Up	1	
116209A	Caged Needle Bearing, 1000/2000 Allison Stator Shaft (Rear) 2000-Up	1	29531013
116211A	Washer, 1000/2000 Allison Stator To C1/C2 Drum (3 Tab) (Plastic) 2000-Up	1	29531035
116216A	Bearing W/Races, 1000/2000 Allison P1 Sun Gear To P1 Planet (.131" Thick, 2.839"OD,2.060"ID) 2000-Up (Also Fits P2 Planet To P2 Sun Gear #238 2000-06)	1-2	29531095
116217A	Washer, 1000/2000 Allison P1 Planet Ring Gear To P2 Planet Ring Gear (2 Tab) Plastic (6 11/16"OD) 2000-Up	1	29536862
116220A	Washer, 1000/2000 Allison C2 Clutch Hub To P1 Sun Gear (.064" Thick, 2.285"ID) First Design 2000-Up	1	
116220AA	Washer, 1000/2000 Allison C2 Clutch Hub To P1 Sun Gear (.107" Thick, 3.095"OD, 2.285"ID) 2nd Design (3.305"OD At Tabs) 2000-Up	1	
116220AB	Washer, 1000/2000 Allison C2 Clutch Hub To P1 Sun Gear (.107" Thick, 3.105"OD, 2.285"ID) 3rd Design (3.425"OD At Tabs) 2000-Up	1	29531089
116232A	Bearing W/Races, 1000/2000 Allison Input Shaft To C1 Clutch Hub (1st Design) 1.705"OD (Also Fits P3 Sun Gear To Output Shaft)	1-2	29537515
116232AA	Bearing W/Races, 1000/2000 Allison Input Shaft To C1 Clutch Hub (2nd Design) 2.120"OD (Also Fits P3 Sun Gear To Output Shaft)	1-2	29539501
116235A	Bearing W/Races, 1000/2000 Allison C1 Clutch Hub To C2 Clutch Hub (.140" Thick, 2.598"OD, 1.916"ID) 2000-Up	1	29533190
116238A	Bearing W/Races, 1000/2000 Allison P2 Planet To P2 Sun Gear 2000-06 (Use 116216A)	1	29531095
116238AA	Bearing W/Races, 1000/2000 Allison P2 Planet To P2 Sun Gear (.142" Thick)(1.892"ID) 2007-Up	1	
116244A	Bearing W/Races, 1000/2000 Allison P1 Planet To P2 Planet (.150" Thick, 3.393"OD, 2.490"ID) 2000-Up	1	29531106
116247A	Bearing W/Races, 1000/2000 Allison P3 Sun Gear To Output Shaft 2000-Up (Use 116232A)	1	29531089
116255AA	Washer, 1000/2000 Allison Output Shaft To Bearing #272 (.275mm) 2000-Up	1	29536850
116255AB	Washer, 1000/2000 Allison Output Shaft To Bearing #272 (.500mm) 2000-Up	1	29536850

© Whatever It Takes Transmission Parts. Inc.

116255AC	Washer, 1000/2000 Allison Output Shaft To Bearing #272 (.725mm) 2000-Up	1	29536850
116255AD	Washer, 1000/2000 Allison Output Shaft To Bearing #272 (.955mm) 2000-Up	1	29536850
116255AE	Washer, 1000/2000 Allison Output Shaft To Bearing #272 (1.200mm) 2000-Up	1	29536850
116255AF	Washer, 1000/2000 Allison Output Shaft To Bearing #272 (1.425mm) 2000-Up	1	29536850
116255AG	Washer, 1000/2000 Allison Output Shaft To Bearing #272 (1.650mm) 2000-Up	1	29536850
116268A	Caged Needle Bearing, 1000/2000 Allison Sets In Extension Housing (.980" Thick, 3.740"OD) (Cast # INA NK8025) 2000-Up	1	29531151
116271A	Shim/Snap Ring, 1000/2000 Allison Extention Housing To Output Shaft Bearing #272	1	
116272A	Ball Bearing, 1000/2000 Allison Extention Housing To Output Shaft (.747" Thick)(3.348"OD) (1.770"ID) (Cast # 6209C350 Slovakia) 2000-Up	1	23047970
116287A	Washer/Seal, 1000/2000 Allison Output Shaft Yoke (2WD) To Bolt (1.065"OD) 2000-Up	1	29536848

PART #	GASKETS & RUBBER COMPONENTS	QTY.	REFERENCE #
116300AW	Gasket, 1000/2000 Allison Bottom Pan (Molded Rubber) 2001-Up	1	29536526
116305A	Gasket, 1000/2000 Allison Extension Housing 2000-Up	1	29536941
116309A	O-Ring, 1000/2000 Allison Bell Housing Bolt (Takes 10) 2000-Up	10	
116311A	O-Ring, 1000/2000 Allison Pump Body 2000-Up	1	29537620
M301317B	Gasket, 1000/2000 Allison Extension Housing To Transfer Case 2000-Up	1	
116318A	Gasket, 1000/2000 Allison Bell Housing To Spacer Plate 2000-Up	1	29536478
116319A	Gasket, 1000/2000 Allison PTO Cover To Case 2000-Up	2	29531325
116324A	Gasket, 1000/2000 Allison Spacer Plate To Case 2000-Up	1	29541030
116330A	Lip Seal, 1000/2000 Allison C2 Piston (Outer) (Small) 2000-Up	1	29542808
116331A	Lip Seal, 1000/2000 Allison C2 Piston (Outer) (Large) 2000-Up	1	29542809
116332A	Lip Seal, 1000/2000 Allison C1 Piston Housing 2000-Up	1	29542812
116333A	Lip Seal, 1000/2000 Allison C2 Piston (Inner) 2000-Up	1	29542812
116334A	Lip Seal, 1000/2000 Allison C1 Piston (Inner) 2000-Up	1	29531293
116335A	Lip Seal, 1000/2000 Allison C1 Piston (Outer) 2000-Up	1	29542809
116338A	Lip Seal, 1000/2000 Allison C5 Piston (Inner) 2000-Up	1	29536859
116339A	Lip Seal, 1000/2000 Allison C5 Piston (Outer) 2000-Up	1	29534894
116370A	O-Ring, 1000/2000 Allison Speed Sensor 2000-Up	3	
116371A	Seal, 1000/2000 Allison Dipstick Tube 2000-Up	1	
116378-1A	O-Ring, 1000/2000 Allison Cooler Line Fitting To Cooler Line	1	
116378A	O-Ring, 1000/2000 Allison Cooler Line Fitting To Case	1	
116379A	Seal, 1000/2000 Allison Filter 2000-Up	1	29535601
116387A	Seal, 1000/2000 Allison Drain Plug 2000-Up	1	

PART #	TECHNICAL MANUALS	QTY.	REFERENCE #
116400A	Technical Manual, 1000/2000 Allison 5 Speed 2000-Up	1	

PART #	ELECTRICAL COMPONENTS	QTY.	REFERENCE #
74410A	Switch, 1000/2000 Allison MPLS/PRNDL (4 & 7 Pin Connectors) (Black Plastic) 2000-02	1	24229422
116410A	Switch, 1000/2000 Allison MPLS/PRNDL (2 Connector) 2000-02 (Tan/White Plastic)(External)	1	29540479
116410AA	Switch, 1000/2000 Allison MPLS/PRNDL (1 Connector) 2003-Up (Black Plastic)(External)	1	29541852
116410AB	Switch, 1000/2000 Allison IMS/PRNDL (Switch Is Made Onto The Rooster Comb)(Internal Mode Switch) 2006-Up	1	
14411E	Pressure Switch Assembly, 1000/2000 Allison Manifold Pressure 2000-Up	1-2	24222079
74418E	Solenoid, 1000/2000 Allison TCC (PWM) 1999-Up (Round Black Connector)	1	8683187
116419A	Sensor, 1000/2000 Allison Engine Speed 2000-Up (Use 116438A)	1	29536408
116421A	Solenoid, 1000/2000 Allison Shift ("D") 2000-Up (Also Fits 1000/2000 Allison "C" & "E" Shift Solenoids)(Also Fits 1000/2000 Allison Modulator Pressure Control G 2004-Up)(Can Use D74418EA)	1-3	29536833
116422A	Solenoid, 1000/2000 Allison Shift ("C") 2000-Up (Use 116421A)	1	29536833
116423A	Solenoid, 1000/2000 Allison Shift ("E") 2000-Up (Use 116421A)	1	29536833
116425A	Solenoid, 1000/2000 Allison TCC 2000-Up (Use 74418E)	1	8683187
116425B	Solenoid, 1000/2000 Allison TCC (Red Connector) 2006-Up	1	
116431A	Solenoid, 1000/2000 Allison Trim ("B") (.665"OD Snout) 2000-05	1	29533075
116431B	Solenoid, 1000/2000 Allison Trim "B" (Brown Connector) 2006-Up	1	
116435A	Solenoid, 1000/2000 Allison Trim ("A") (.645"OD Snout) 2000-05	1	29533074
116435B	Solenoid, 1000/2000 Allison Trim "A" (Black Connector) 2006-Up	1	
116436A	Sensor, 1000/2000 Allison Output Speed 2000-Up (Use 116438A)	1	29536408
116438A	Sensor, 1000/2000 Allison Turbine Shaft Speed 2000-Up (Also Fits Engine(Or Input) & Output Speed Sensor)	1-3	29536408
116442A	Switch, 1000/2000 Allison Manifold Pressure 2000-05 (Use 14442A)	1	
116442B	Switch Assembly, 1000/2000 Allison Manifold Pressure (4 Pin) 2006-Up (Retro Fits 14442A 6 Pin)	1	
14442A	Switch, 1000/2000 Allison Manifold Pressure Switch (6 Pin) 2000-05	1	

© Whatever It Takes Transmission Parts. Inc.

PART #	ELECTRICAL COMPONENTS (Continued)	QTY.	REFERENCE #
74445CK	Repair Kit, 1000/2000 Allison External Wire Harness (7 & 4 Pin Neutral Safety Connector With Wires & Shrink Tubes) 2000-02	1	88987185
84445GH	Wire Harness Repair, Allison 1000 External (20 Pin Connector)(GM Universal)(Rostra)	1	
116446A	Wire Harness, 1000/2000 Allison Internal (6 Solenoids) 1999-03 (20 Pin Main Connector)	1	29541371
116446AK	Repair Kit, 1000/2000 Allison Internal Wire Harness	1	
116446AA	Wire Harness, 1000/2000 Allison Internal (7 Solenoids) 2004-05	1	29539792
116446B	Wire Harness, 1000/2000 Allison Internal (20 Pin Connector) 2006-Up	1	
116446B-1	Wire Harness, 1000/2000 Allison Internal (20 Pin Connector)(With 2 Six Pin Connectors, 3 Two Pin Connectors and 4 Two Blade Connectors) 2011-Up	1	
116446BA	Wire Harness, 1000/2000 Allison Internal (21 Pin Connector) 2006-Up	1	
116495A	Pick-Up Tube, 1000 Allison (Use W/101010 Filter)	1	
116495B	Adapter Tube, 1000/2000 Allison Spin-On Filter To Bell Housing Or Cooler Manifold (1 1/4" Long) 2000-Up	1	29536298

PART #	PUMP COMPONENTS	QTY.	REFERENCE #
S116507C-3	Springs, 1000/2000 Allison Lube Regulator & Converter Relief Valve Springs (2 Springs) 2000-03 (Sonnax)	1	
116507CK	Lock-Up Boost Valve Kit, 1000/2000 Allison 2004-06 (Transgo)(Contains: Valve, Ball, Spring & End Plug)	1	
S116507G-1	Valve, 1000/2000 Allison C1 Clutch Fill & Exhaust Rate Valve With Teflon Seal (Sonnax)	1	
116507PK	Pressure Regulator Assembly, Allison 1000/2000 2000-10 (Contains: Spring, Shim & Drill Bit) (Ratio Tek)	1	
116507PAK	Pressure Regulator Assembly, Allison 1000/2000 2011-Up (For Stock Trucks)(Contains: Springs, Shims, & Drill Bits)(Ratio Tek)	1	
116507PRK	Pressure Regulator Assembly, Allison 1000/2000 2011-Up (For 800HP & Up Trucks)(Contains: Springs, Shims & Drill Bits)(Ratio Tek)	1	

PART #	HARD PARTS	QTY.	REFERENCE #
116510A	Pump Body W/Gears, 1000/2000 Allison (Cast # 29539582 or 29531031 or 29537882) 2000-Up (4.290"OD, 37 Teeth Outer Gear)(.978"Thick, 31 Teeth Inner Gear)	1	29541145
116510AK	Oil Pump Kit, Allison 1000/2000 (Includes: Pump Body, O-Ring, Pump Gears, Wear Plate, Metal Clad Seal, Bushing, And Pins)(This Kit Updates All Versions)	1	
116510A-1	Pump Body W/Gears, 1000/2000 Allison (Cast # 29541147) 2000-Up (37 Teeth Outer Gear, 31 Teeth Inner Gear)	1	
116510AA	Pump Body W/Gears, 1000/2000 Allison (Cast # 26542798) 2000-Up (4.325"OD, 26 Teeth Outer Gear)(.870" Thick, 22 Teeth Inner Gear)	1	
116520A	Stator, 1000/2000 Allison (Cast # 29536681) 1st Design	1	
116520AA	Stator, 1000/2000 Allison (Cast # 29542710) 2nd Design	1	
116520AB	Stator, 1000/2000 Allison (Cast # 29549325)	1	
116520AC	Stator, 1000/2000 Allison (Cast # 29542795)	1	
116530A	Pump Gears, 1000/2000 Allison (.980" Thick) 2000-Up	1	
116544A	Pump Plate, 1000/2000 Allison (1st Design)	1	29539583
116544AA	Pump Plate, 1000/2000 Allison (2nd Design)	1	29539583
116544AB	Pump Plate, 1000/2000 Allison (3rd Design)	1	
116554A	Drum, 1000/2000 Allison C1/C2 Clutch (With 64 Teeth PTO Gear) 2000-04	1	29542802
116554AA	Drum, 1000/2000 Allison C1/C2 Clutch (With 64 Teeth PTO Gear) 2005-Up	1	
116554B	Drum, 1000/2000 Allison C1/C2 Clutch (With Reluctor Ring)(Non PTO Type) 2000-04	1	
116554BA	Drum, 1000/2000 Allison C1/C2 Clutch (With Reluctor Ring)(Non PTO Type) 2005-Up	1	
116570A	Hub, 1000/2000 Allison C2 Clutch (24 Outer Teeth) (3.325"Tall)(2.220"OD Nose) 1st Design (.355" Long Washer Tab Holes)	1	29536962
116570AA	Hub, 1000/2000 Allison C2 Clutch (24 Outer Teeth) (3.325"Tall)(2.260"OD Nose) 2nd Design (.540" Long Washer Tab Holes)	1	
116570AHPK	Hub, 1000/2000 Allison C2 Clutch (24 Outer Teeth)(High Performance Made From 4140HTSR Billet Steel)(Machining Modification Required To P1 Sun Gear)	1	
116574A	Hub, 1000/2000 Allison C1 Clutch (Outer) (3.100" Tall) 1st Design (With Shoulder Where #116232A Rides)	1	
116574AA	Hub, 1000/2000 Allison C1 Clutch (Outer) (3.100" Tall) 2nd Design (No Shoulder Where Bearing #116232AA Rides)	1	29539505
116580A	Planet, 1000/2000 Allison P1 (4 Gear)(1st Design, Flat Where #244 Bearing Rides) 2000-Up	1	29541704
116580AA	Planet, 1000/2000 Allison P1 (4 Gear)(2nd Design, Recessed Where #244 Bearing Rides)00-Up	1	
116582A	Planet, 1000/2000 Allison P2 (4 Gear)(2 5/16" Long Hub)(1st Design)(Uses 116612A Or 116612AA Sun Gear)	1	29539510
116582AA	Planet, 1000/2000 Allison P2 (4 Gear)(2 5/16" Long Hub)(2nd Design)(Uses 116612AB Sun Gear)	1	
116584A	Planet, 1000/2000 Allison P3 (4 Gear, 1 Groove) (With 22 Parking Lugs) (27 Teeth Pinions) (Uses 49 Teeth Sun Gear # 614) 2000-Up	1	29540500

© Whatever It Takes Transmission Parts. Inc.

116584AA	Planet, 1000/2000 Allison P3 (4 Gear, 1 Groove) (Without Parking Lugs) (27 Teeth Pinions) (Uses 49 Teeth Sun Gear # 614) 2000-Up	1		
116584AB	Planet, 1000/2000 Allison P3 (4 Gear, 1 Groove) (Without Parking Lugs) (31 Teeth Pinions) (Uses 41 Teeth Sun Gear # 614) 2000-Up	1		
116584B	Planet, 1000/2000 Allison P3 (4 Gear, 1 Groove) (With 22 Parking Lugs) (29 Teeth Pinions) (Uses 53 Teeth Sun Gear # 614) 2000-Up	1		
116590A	Ring Gear, 1000/2000 Allison P1 Planet (111 Teeth) (117 Outer Clutch Splines) 2000-Up	1		29541008
116592A	Ring Gear, 1000/2000 Allison P2 Planet (111 Teeth, No Groove)(117 Outer Clutch Splines) (2.325” Thick) 2 Notches For Washer #217 (1st Design) 2000-Up	1		29541707
116592AA	Ring Gear, 1000/2000 Allison P2 Planet (111 Teeth, No Groove)(117 Outer Clutch Splines) 2 Notches For Washer # 217 (2nd Design) 2000-Up	1		
116592AB	Ring Gear, 1000/2000 Allison P2 Planet (111 Teeth, 2 Groove) (117 Outer Clutch Splines) (2.355” Thick) 2 Notches For Washer # 217 (1st Design) 2000-Up	1		
116594A	Ring Gear, 1000/2000 Allison P3 Planet (103 Teeth, 2 Groove) (92 Outer Clutch Splines) (2.460” Thick)(.130” Wide Snap Ring Groove)(Uses 49 Teeth Or 41 Teeth Sun Gear # 614) 2000-Up	1		29539499
116594AA	Ring Gear, 1000/2000 Allison P3 Planet (103 Teeth, No Groove)(86 Outer Clutch Splines) (2.400” Thick)(.090” Wide Snap Ring Groove)(Uses 49 Teeth Or 41 Teeth Sun Gear # 614) 2000-Up	1		
116594B	Ring Gear, 1000/2000 Allison P3 Planet (111 Teeth, 1 Groove) (92 Outer Clutch Splines) (2.460” Thick)(.130” Wide Snap Ring Groove)(Uses 53 Teeth Sun Gear # 614) 2000-Up	1		
116610A	Sun Gear, 1000/2000 Allison P1 Planet (Front) 61 Teeth, 26 Lugs (1st Design) Is Flat Where #220 Washer Rides 2000-Up	1		
116610AA	Sun Gear, 1000/2000 Allison P1 Planet (Front) 61 Teeth, 26 Lugs (2nd Design) Is Recessed Where #220 Washer Rides 2000-Up	1		
116612A	Sun Gear, 1000/2000 Allison P2 Planet (57 Teeth) (1.630” Overall Thickness) 1st Design	1		
116612AA	Sun Gear, 1000/2000 Allison P2 Planet (57 Teeth) (1.510” Overall Thickness) 1st Design	1		
116612AB	Sun Gear, 1000/2000 Allison P2 Planet (57 Teeth) (1.555” Overall Thickness) 2nd Design	1		
116614A	Sun Gear, 1000/2000 Allison P3 Planet (49 Teeth) (1.860” Thick) 2000-Up (Uses 116232A Bearing)	1		29541701
116614AA	Sun Gear, 1000/2000 Allison P3 Planet (49 Teeth) (1.828” Thick) 2000-Up (Uses 116232AA Bearing)	1		
116614AB	Sun Gear, 1000/2000 Allison P3 Planet (53 Teeth)(1.828” Thick) (Use 116232AA Bearing) 2000-Up	1		
116619A	Spacer, 1000/2000 Allison P2 Sun Gear To P3 Sun Gear (1st Design) (.669” Thick)	1		
116619AA	Spacer, 1000/2000 Allison P2 Sun Gear To P3 Sun Gear (2nd Design) (.826” Thick)	1		29541728
116619AB	Spacer, 1000/2000 Allison P2 Sun Gear To P3 Sun Gear (.790” Thick) (2.270”OD)	1		
116670A	Input Shaft, 1000/2000 Allison (13 5/8” Long) 1st Design (Uses A Bearing # 116232A) (With 1.705”OD)	1		
116670AA	Input Shaft, 1000/2000 Allison (13 5/8” Long) 2nd Design (Uses A Bearing #116232AA) (With 2.120”OD)	1		29539506
116670AHP	Input Shaft, 1000/2000 Allison (13 5/8” Long)(2nd Design)(Uses Bearing # 116232AA With 2.120”OD)(Will Retro Fit The 1st Design If Machined To Have a Bearing Pocket For The 116574A)	1		
116674A	Mainshaft, 1000/2000 Allison (10 1/8” Long) .790”OD Pilot On Both Ends 2000-Up	1		29536984
116678A	Output Shaft, 1000/2000 Allison 2WD (7 5/16” Long) Uses A Slide-On Type Yoke 2000-Up	1		
116678AA	Output Shaft, 1000/2000 Allison 2WD (Uses A Bolt-On Type Yoke 2000-Up	1		
116678B	Output Shaft, 1000/2000 Allison 4x4 (6 5/8” Long)(Threaded On The Outside Diameter) (29 Splines For Yoke)	1		
116678BA	Output Shaft, 1000/2000 Allison 4X4 (6 5/8”Long)(Threaded On The Outside Diameter) (33 Splines For Yoke)	1		
116678BHD	Output Shaft, 1000 Allison (4x4)(300M Billet Steel)(Heavy Duty) 2001-10	1		
116740A	Valve Body, 1000/2000 Allison (6 Solenoid) 2001-03	1		
116740AA	Valve Body, 1000/2000 Allison (7 Solenoids) (One Tube Type) 2004-05	1		
116740AB	Valve Body, 1000/2000 Allison (7 Solenoids) (Two Tube Type) 2006-09	1		

PART #	VALVE BODY COMPONENTS	QTY	REFERENCE #
116741-1	Manual Valve, 1000/2000 Allison 2000-Up	1	
S116741F-2	End Sleeve, 1000/2000 Allison F-Trim Valve (Sonnax)	1	
S116741H-3	Spring, 1000/2000 Allison E-Shift Valve (Sonnax)	1	37000-02
T-37000-02BST	Bore Sizing Tool, 1000/2000 Allison (Use With S116741H-3)	1	37000-02BST
S116741HK	Valve Kit, Allison 1000/2000/2400 E Shift (Oversized)(Contains Valve, End Plug, & Spring) (Sonnax)(Must Use T-F-37000-TL15)	1	
T-F-37000-TL15	Tool Kit For S116741HK	1	
A116741S-1K	Valve Set, 1000/2000 Allison Shift Valves (Contains: Steel C, D & E Valves) 2000-Up (Transgo)	1	
A116741S-3K	Spring Kit, 1000/2000 Allison C, D & E Shift Valves (3 Pieces)(RatioTek)	1	
S116741VK	Valve & Spring Kit, 1000/2000 Allison Trim Valves 2002-Up (Contains: A & B Trim Valves & Springs & F Trim Spring) (Sonnax) (Must Use T-37000-TL12)	1	
T-37000-TL12	Reamer For S116741VK	1	

© Whatever It Takes Transmission Parts. Inc.

PART #	HARD PARTS (Continued)	QTY	REFERENCE #
116750A	Bell Housing, 1000/2000 Allison (Round Bell 6 1/2" Thick) With 12 Bolt Cooler Manifold & Two 4 Bolt Mount Bosses	1	
116750AA	Bell Housing, 1000/2000 Allison (Round Bell 6 1/2" Thick) With 12 Bolt Cooler Manifold & No 4 Bolt Mount Bosses	1	
116750AC	Bell Housing, 1000/2000 Allison (Round Bell 6 1/2" Thick) No 12 Bolt Cooler Manifold (Cast # 29536610)	1	
116750B	Bell Housing, 1000/2000 Allison (Chevy Bell 8 3/4" Thick) No 12 Bolt Cooler Manifold (Cast # 29537591)	1	29540491
116750BA	Bell Housing, 1000/2000 Allison (Chevy Bell 8 3/4" Thick) No 12 Bolt Cooler Manifold (Cast # 29540491 Or 29542791)	1	
116750BB	Bell Housing, 1000/2000 Allison (Chevy Bell 8 3/4" Thick)(No Speed Sensor)(Cooler Line Fitting Threads Are .800"ID)(Cast # 29544823)	1	
116750BC	Bell Housing, 1000/2000 Allison (Chevy Bell 8 3/4" Thick)(No Speed Sensor)(Cast # 29549481) 2010-Up	1	
116757A	PTO Cover, 1000/2000 Allison (6 Bolt) 2000-Up	2	6774322
116760A	Case, 1000/2000 Allison (With PTO) 2000-Up	1	29536606
116764A	Spacer Plate, 1000/2000 Allison Bell Housing To Case (1st Design) 2000-Up	1	29541148
116764AA	Spacer Plate, 1000/2000 Allison Bell Housing To Case (2nd Design)	1	
116765A	Pan, 1000/2000 Allison Bottom (2 5/8" Deep At Drain Plug End) 2000-Up	1	29536524
116765AA	Pan, 1000/2000 Allison Bottom (4 7/16" Deep At Drain Plug End) 2000-Up	1	
116770A	Extension Housing, 1000/2000 Allison 2WD (6 3/8" Long) With 4 Bolt Flange 2000-Up	1	
116770AC	Extension Housing, 1000/2000 Allison 2WD (5 3/8" Long) Slip-In Yoke 2000-Up	1	
116770B	Extension Housing, 1000/2000 Allison 4x4 (1st Design) 2000-9/23-04 (Aluminum)	1	
116770BA	Extension Housing, 1000/2000 Allison 4x4 (2nd Design) 9/24-04-Up (Aluminum)(Stronger Webbing)(Retro Fits To 2000)(6 Bolts To Transfer Case)	1	29542109
116770BB	Extension Housing, 1000/2000 Allison 4x4 2010-Up (10 Bolts To Transfer Case)	1	
116776AK	Bolt Set, 1000/2000 Allison Bell Housing To Case (20 Pieces)	1	
116777AK	Bolt Set, 1000/2000 Allison Bell Housing To Stator 2000-Up (10 Per Set)	1	
116778AK	Bolt Set, 1000/2000 Allison Stator To Pump Body 2000-Up (5 Per Set)	1	
116779AK	Bolt Set, 1000/2000 Allison Bottom Pan 2000-Up (12 Per Set)	1	
116781AK	Bolt Set, 1000/2000 Allison Extension Housing To Case 2000-Up (16 Per Set)	1	
116782AK	Bolt Set, 1000/2000 Allison Valve Body To Case (33 Pieces) (For 6 Solenoid Valve Body) 2000-03	1	
116782BK	Bolt Set, 1000/2000 Allison Valve Body To Case (39 Pieces) (For 7 Solenoid Valve Body) 2004-Up	1	
116788AK	Bolt Set, 1000/2000 Allison PTO Cover (6 Pieces) 2000-Up	1	
116798A	Bolt, 1000/2000 Allison 2WD Yoke To Output Shaft 2000-Up	1	29536847
116798B	Nut, 1000/2000 Allison Output Shaft (4x4) (With 4 Notches On The Outside Diameter) (1.505"ID Of Threads) 2000-Up	1	29531231
116798BA	Nut, 1000/2000 Allison Output Shaft (4X4)(W/4 Notches On The Outside Diameter)(1.715"ID Of Threads) 2000-Up	1	
T-4500-AAC-KIT	Remover/Installer Tool, 1000/2000 Allison Output Shaft Nut 2WD/4x4	1	
T-100SS	Remover/Installer Tool, 1000/2000 Allison Output Shaft Nut 4x4 Only (1/2" Drive Socket)	1	
116839A	Filter Magnet, 1000/2000/2400 Allison (Screw On Filter) 2000-Up	1	
116841A	Yoke, 1000/2000 Allison Output Shaft (2WD) 2000-Up	1	15004046
116842A	Bracket, 1000/2000 Allison Holds Speed Sensors On 2000-Up	3	
116845A	Reluctor, 1000/2000 Allison 2WD Output (40 Teeth) 1.980" Thick 2000-Up	1	29536591
116845B	Spacer, 1000/2000 Allison 4x4 2000-Up	1	29541013
116861A	Snap Ring, 1000/2000 Allison Holds C2 Clutch Balance Piston In Drum (Also Holds C2 Clutches In C1/C2 Drum) (Also Holds C2 Pressure Plate in C1/C2 Drum) 2000-Up	3	29531079
116862A	Snap Ring, 1000/2000 Allison Holds C1 Piston Housing In Drum (.094" Thick, 3.520"OD, 2 Eyelets)2000-Up	1	29536107
116873A	Snap Ring, 1000/2000 Allison Holds C4 Pressure Plate In Case (1st Design) (Spiral) (9 7/8"OD, .125" Thick) 2000-Up	1	
116873AA	Snap Ring, 1000/2000 Allison Holds C4 Pressure Plate In Case (2nd Design) Not A Spiral (9 11/16"OD, .158" Thick)	1	29544119
116875A	Snap Ring, 1000/2000 Allison Holds C1 Clutch Balance Piston In C1 Clutch Piston Housing (.079" Thick, 6 9/16"OD) 2000-04	1	29541011
116875AA	Snap Ring, 1000/2000 Allison Holds C1 Clutch Balance Piston In C1 Clutch Piston Housing (.115" Thick, 6 13/16"OD) 2005-Up	1	
116876A	Snap Ring, 1000/2000 Allison Holds C1 Clutch Pressure Plate In C1/C2 Drum (.079" Thick, 2.860"OD) 2000-Up	1	29536287
116877A	Snap Ring, 1000/2000 Allison Holds C1 Clutch Spring Retainer To C1/C2 Drum (.078" Thick, 3.120"OD) 2000-Up	1	
116878A	Snap Ring, 1000/2000 Allison Holds C3 Clutch Pressure Plate In Case 2000-Up (Also Holds C5 Clutch Pressure Plate In Case)	1-2	29531054
116879A	Snap Ring, 1000/2000 Allison Holds C1 Clutch Pressure Plate To Input Shaft (Spiral) (3.265"OD) 2000-Up	1	29536288

© Whatever It Takes Transmission Parts. Inc.

116880A.....Snap Ring, 1000/2000 Allison Holds Input Shaft To C1/C2 Drum (2 Eyelets) 2000-Up.....1 .....
116882A.....Snap Ring, 1000/2000 Allison Holds P2 Ring Gear To P1 Planet (.060" Thick) 2000-Up
.....(Also Holds P3 Ring Gear To P2 Planet #889 2000-Up).....1-2.....29541011
116882AA.....Snap Ring, 1000/2000 Allison Holds P2 Ring Gear To P1 Planet (.085" Thick) 2000-Up
.....(Also Holds P3 Ring Gear To P2 Planet # 889) 2000-Up.....1 .....
116889A.....Snap Ring, 1000/2000 Allison Holds P3 Ring Gear To P2 Planet 2000-Up (Use 116882A).....1 29541011
116892A.....Snap Ring, 1000/2000 Allison Holds C4 Clutch Pressure Plate In Case 2000-Up
.....(Use 116878A) 1 29531054
116893A.....Snap Ring, 1000/2000 Allison Holds Bearing # 268 In Extension Housing (.078" Thick,
.....3.990"OD) 2000-Up.....1 29531152
116895A.....Snap Ring, 1000/2000 Allison Holds Bearing # 272 In Extension Housing (.110" Thick,
.....3.705"OD) (With 2 Eyelets) 2000-Up 1 29536981
116926A.....Spring, 1000/2000 Allison Accumulator 2000-Up.....1-2.....
116927A.....Piston, 1000/2000 Allison Accumulator 2000-Up .....1-2.....
116929A.....Cover, 1000/2000 Allison Accumulator 2000-Up.....1 .....
116960A.....Piston, 1000/2000 Allison C2 Clutch (Aluminum) Cast # 29536100 (2.850" Thick) 2000-04.....1 29542807
116960AA.....Piston, 1000/2000 Allison C2 Clutch (Aluminum) Cast # 29542807 (2.880" Thick) 2005-Up .....1 .....
116960B .....Balance Piston, 1000/2000 Allison C2 Clutch (Bonded) 2000-Up (.550" Thick)(7 7/8"OD)(Black) .1 29536105
116960BK.....Piston Set, 1000/2000 Allison (Bonded) 2000-05 (1st, 2nd, 3rd Generation) (Contains: One # 960B,
.....Two # 962A & One #964B).....1 .....
116960BAK.....Piston Set, 1000/2000 Allison (Bonded) 2006-09 (4th Generation) (Contains: One # 960B,
.....Two # 962A & One # 964BA) .....1 .....
116960BBK.....Piston Set, 1000/2000 Allison (Bonded) 2010-Up (5th Generation) (Contains; 1 # 960B,
.....2 # 962A, & 1 # 964BA) .....1 .....
116962A.....Piston, 1000/2000 Allison C3 & C4 Clutch (Bonded) (.840" Thick)(8 3/4"OD)(7 3/16"ID)
.....2000-09 (Black).....2 29543321
116962AA.....Piston, 1000/2000 Allison C3 & C4 Clu(Bonded) 2010-Up (Black).....1 .....
116963A.....Piston Housing, 1000/2000 Allison C1 Clutch (6 3/8"OD) 2000-04 (29536106 Or 29537992) 1 29542811
116963AA.....Piston Housing, 1000/2000 Allison C1 Clutch (6 3/4"OD) 2005-Up (Cast # 2952811) .....1 .....
116964A.....Piston, 1000/2000 Allison C1 Clutch (Aluminum) (Cast # 29536109) (5.925"OD) 2000-04.....1 29543239
116964AA.....Piston, 1000/2000 Allison C1 Clutch (Aluminum) (Cast # 29543239) (6"OD) 2005-Up.....1 .....
116964B .....Balance Piston, 1000/2000 Allison C1 Clutch (Bonded) 2000-Up (.410" Thick)(6.035"OD)
.....(4 5/8"ID)(Black).....1 29537993
116964BA.....Balance Piston, 1000/2000 Allison C1 Clutch (Bonded)(.410" Thick)(6 5/16"OD)(4 3/8" ID)
.....(Black) 2005-Up .....1 .....
116966A.....Piston, 1000/2000 Allison C5 Clutch (Aluminum)(2.165" Thick)(10"OD)(4.550"ID)(2WD Only)
..... 2000-Up 1 29536211
116970A.....Springs W/Retainer, 1000/2000 Allison C2 Clutch Return (32 Springs, 5.775"OD,
.....2 Notches) 2000-04.....1 29542810
116970AA.....Springs W/Retainer, 1000/2000 Allison C2 Clutch Return (24 Springs, 5.650"OD) 2005-Up .....1 .....
116972A.....Springs, 1000/2000 Allison C3 & C4 Clutch Return (1st Design Used With The 11 Slot Steel)
.....(3 Sets Of 3 Springs In Each Set).....2 29542191
116972B .....Springs, 1000/2000 Allison C3/C4 Clutch Return (2nd Design Used With The 14 Slot Steel)
.....(3 Sets Of 3 Springs In Each Set).....2 .....
116972C .....Springs W/Retainer, 1000/2000 Allison C3/C4 Clu Return (3rd Design)(3 Sets Of 3 Springs
.....W/Retainer) 2010-Up .....2 .....
116974A Springs W/Retainer, 1000/2000 Allison C1 Clutch Return (28 Springs) (4.322"OD) 2000-04 1 29542814
116974AA.....Springs W/Retainer, 1000/2000 Allison C1 Clutch Return (32 Springs) (5.750"OD) 2005-Up.....1 .....
116976A.....Springs W/Retainer, 1000/2000 Allison C5 Clutch Return (18 Springs) 9 3/4"OD
.....(1 Tab) 2000-Up 1 29531134
116991A.....Linkage Assembly, 1000/2000 Allison Internal (1st Design) Gold Color Manual Shaft
.....With Hollow Roll Pin (7 Pieces) .....1 .....
116991A-4 .....Manual Shaft, 1000/2000 Allison (1st Design) Gold Color.....1 .....
116991A-5 .....Roll Pin, 1000/2000 Allison Linkage (1st Design) Hollow.....1 .....
1116991AA .....Linkage Assembly, 1000/2000 Allison Internal (2nd Design) Black Manual Shaft With
.....Solid Roll Pin (7 Pieces).....1 .....
116991AA-4....Manual Shaft, 1000/2000 Allison (2nd Design) Black .....1 .....
116991AA-5....Roll Pin, 1000/2000 Allison Linkage (2nd Design) Solid .....1 .....
116995A.....Park Pawl Assembly, 1000/2000 Allison (.709"OD Pin) (3 Pieces).....1 .....
116995A-3 .....Spring, 1000/2000 Allison Parking Pawl 2000-Up.....1 .....
116996A.....Fitting, 1000/2000 Allison Cooler Line (Push-In) 2000-Up (1 1/8" At Flats)(1.375" Long).....1 .....
T116996EL .....Fitting, 1000/2000 Allison Cooler Line (Push-In Line)(Adapter Fitting)(3/4" x 16 Thread)
.....(5/8" Line With 7/8" Barb) 2001-E04 (Allows You To Replace the 2003-Up Bell Housing With
.....The Earlier Style)(Teckpak).....1 .....
T116996FL.....Fitting, 1000/2000 Allison Cooler Line (Push In Line)(Adapter Fitting)(3/4" x 16 Thread)
.....(5/8" Line With 7/8" Flare Ring) 2004-Up (Allows You To Replace The 2003-Up Bell Housing
.....With The Earlier Style)(Teckpak).....1 .....
T116996L.....Fitting, 1000/2000 Allison Cooler Line (Push-In Line)(Steel)(Replaces Aluminum)
.....(7/8" x 14 Thread)(5/8" Line With 21mm Barb) 2004-Up (Teckpak).....1 .....

© Whatever It Takes Transmission Parts. Inc.

PART #	HARD PARTS (Continued)	QTY	REFERENCE #
T116996LA	Fitting, 1000/2000 Allison Cooler Line (Push In Line)(Steel)(Replaces Aluminum)(7/8” x 14 Thread) (5/8” Line With 7/8” Flare Ring) 2001-03 (Teckpak)(Allows You To Replace The 2003-Up Bell Housing With The Earlier Style)	1	
116999A	Oil Tube, 1000/2000 Allison Valve Body (7 7/8” Long)	1	

© Whatever It Takes Transmission Parts. Inc.

Raybestos POWERTRAIN

IT'S OE DEDICATION THAT DRIVES AFTERMARKET INNOVATION



TOW MORE WEIGHT RUN HARDER

Raybestos Powertrain Torqkits feature added capacity GPZ friction and steel reaction plates along with a complete set of installation instructions. With an enhanced shift feel, increased torque capacity, and smooth engagements Raybestos Powertrain drop-in Torqkits are designed to help tear up the drag strip, bust through the mud, and pull towards success.

TORQKIT

ALLISON 1000/2000 PERFORMANCE TORQKITS

C1 DROP-IN TORQKIT 1999-ON | 116108AHPK
C2 DROP-IN TORQKIT 1999-ON | 116100AHPK
C3 DROP-IN TORQKIT 1999-2010 | 116106AHPPK
C3 DROP-IN TORQKIT 2011-ON | 116106AAHPK
C3 TORQKIT (REQUIRES MACHINING) 2011-ON | 116106AMHPK
C4 DROP-IN TORQKIT 1999-2010 | 116104AHPK
C4 DROP-IN TORQKIT 2011-ON | 116104AAHPPK

MADE IN THE USA | OE SUPPLIER

RaybestosPowertrain | RaybestosPower
1.800.686.4729 | RaybestosPowertrain.com

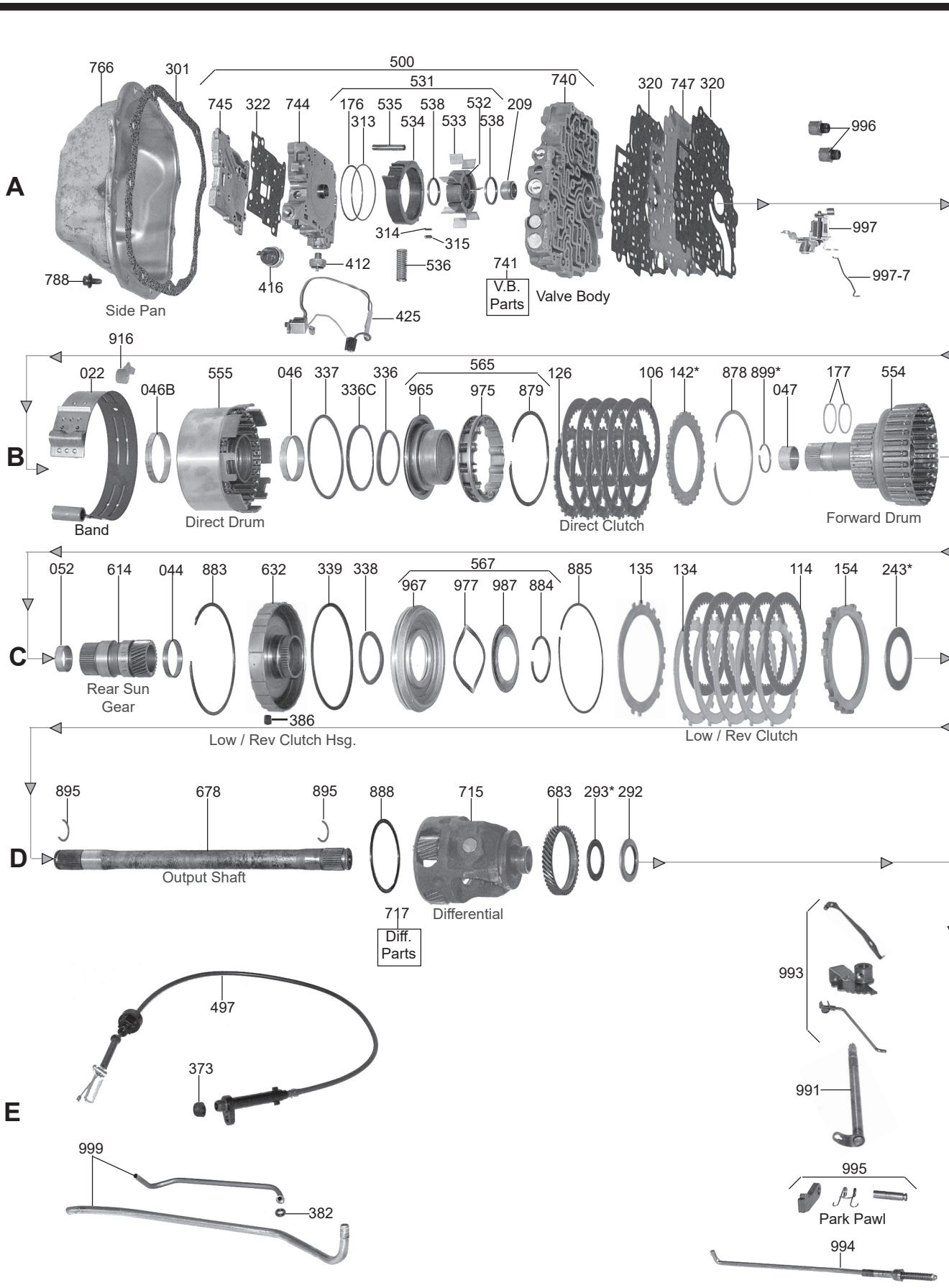

000 P&R Kits
002 OHK Kits
004 Master L/Steels Kit
006 Master W/Steels Kit
011 Filter Kits
030 Bushing Kits
119 Friction Module
139 Steel Module
165 V.B. Kits
175 Ring Kits
200 Washer Kits
201 Bearing Kits
204 Planet Replacement Kits
390 External Seal Kits
400 Tech Manuals

© Whatever It Takes Transmission Parts. Inc.

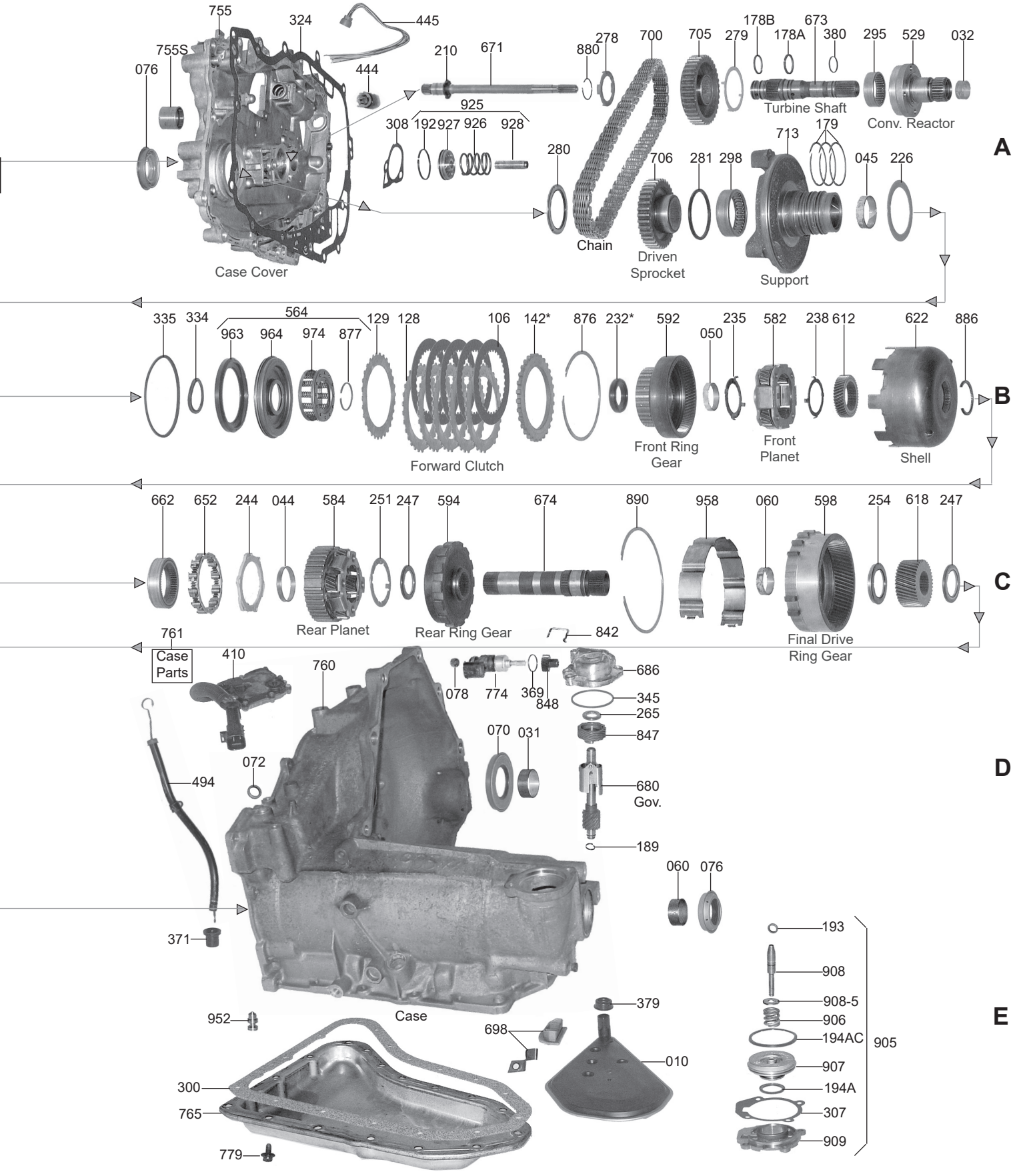

© Whatever It Takes Transmission Parts. Inc.

PART #	PAPER & RUBBER KIT	QTY.	REFERENCE #
64000C	Paper & Rubber Kit, 125/125C Combo 1980-Up	1	

PART #	OVERHAUL KIT	QTY.	REFERENCE #
64002C	Overhaul Kit, 125/125C Combo 1980-Up	1	

PART #	MASTER L/STEEL KIT	QTY.	REFERENCE #
64004	Master L/Steels, 125/125C 1980-E84	1	
64004B	Master L/Steels, 125C L1984-Up	1	

PART #	MASTER W/STEEL KIT	QTY.	REFERENCE #
64006	Master W/Steels, 125/125C 1980-E84	1	
64006B	Master W/Steels, 125C L1984-Up	1	

PART #	FILTER	QTY.	REFERENCE #
64010	Filter, 125/125C 1980-Up	1	8666665

PART #	FILTER KIT	QTY.	REFERENCE #
64011	Filter Kit, 125/125C 1980-Up	1	

PART #	MISC FILTERS	QTY.	REFERENCE #
64014	Screen, 125/125C Governor (In Case) 1980-Up	1	8660770
64015	Filter, 125C Aux. Valve Body 1982-Up	1	8664921
64017	Filter, 125C TCC Solenoid 1982-Up	1	8664811

PART #	BANDS	QTY.	REFERENCE #
64022	Band, 125/125C Flex (Narrow) 1980-81	1	8631030
64022A	Band, 125/125C Flex (Wide) 1982-Up	1	8637623
64022AK	Band, 125/125C Flex (Kevlar) 1982-Up	1	
64022B	Band, 125C Flex (Wide)(High Energy) 1994-Up (Retro Fits To 1982)	1	

PART #	BUSHINGS	QTY.	REFERENCE #
64030	Bushing Kit, 125/125C 1980-Up	1	
64031	Bushing, 125 Converter Hub 1980-81	1	8631907
64031B	Bushing, 125C Converter Hub 1982-Up	1	8637905
64032	Use 54036A	1	
54036A	Bushing, 125/125C Converter Reactor (Stator) 1980-Up	1	8628915
64044	Bushing, 125/125C Center Support (Low/Reverse Clutch Housing) & Rear Planet 1980-Up	2	8631905
64045	Bushing, 125/125C Driven Sprocket Support 1980-Up	1	8631900
64046	Bushing, 125/125C Direct Drum (Rear) 1980-Up	1	8631901
64046B	Bushing, 125/125C Direct Drum (Front) 1980-Up	1	8631902
64047	Bushing, 125/125C Input Shaft 1980-Up	1	8631903
64050	Bushing, 125/125C Front Ring Gear (Input Gear) 1980-Up	1	8631904
64052	Bushing, 125/125C Reaction Sungear Shaft 1980-Up	1	8631906
64060	Bushing, 125/125C Case & Final Drive Gear 1980-Up	2	8631119
64060AK	Bushing Set, 125/125C Case & Final Drive Gear 1980-Up (3 Bushings)(Supertuff Teflon Coated) (Superior)	1	

PART #	METAL CLAD SEALS	QTY.	REFERENCE #
84070	Seal, 125/125C Front (Converter Hub) 1980-Up	1	8664812
64072	Seal, 125/125C Manual Lever 1980-83	1	8637590
84072A	Seal, 125C Manual Lever 1984-Up	1	8644709
64075	Seal, 125/125C Axle Stabilizer 1980-Up	1	
T84075	Seal, 125/125C Axle Stabilizer (Teckpak) 1980-Up	1	
84076	Seal, 125/125C Axle (Both Sides)(2.155"OD) 1980-Up	2	8631156
44078X	Seal, 125/125C Speed-O Shaft 1980-Up	1	1240382
64079	Seal, 125/125C Pump Shaft 1980-5/84	1	8637569
64209A	Bearing W/Seal, 125C Pump Shaft 6/84-Up	1	866375
T64275	Axle Stabilizer, 125/125C Right Axle (Bearing Type)(Teckpak) 1980-Up	1	
64379	Seal, 125C Filter 1986-Up	1	8652898

© Whatever It Takes Transmission Parts. Inc.

PART #	FRICTION CLUTCH	QTY.	REFERENCE #
64106	Friction, 125/125C Forward & Direct Clutch .080" 1980-E84	8	8661380
64106A	Friction, 125/125C Forward & Direct Clutch .069" L1984-Up	8-10	8660168
64114	Friction, 125/125C Low/Reverse Clutch .080" 1980-E84	5	8652029
64114A	Friction, 125C Low/Reverse Clutch .090" L1984-Up	5	8666667
64119	Friction Module, 125/125C 1980-E84	1	8666662
64119B	Friction Module, 125C L1984-Up	1	

PART #	STEEL CLUTCH	QTY.	REFERENCE #
64126	Steel, 125/125C Direct Clutch .090" 1980-Up	4	8661026
64126X	Steel, 125/125C Direct Clutch .100" (Oversize) 1980-Up	AR	
64128	Steel, 125/125C Forward Clutch .076" (Flat) 1980-Up	3-4	8631379
64129	Steel, 125/125C Forward Clutch .050" (Waved) 1980-Up	1-2	8657257
64134	Steel, 125/125C Low/Reverse Clutch .080" 1980-83	5	8631076
64134A	Steel, 125C Low/Reverse Clutch .088" 1984-Up	4	8652027
64135	Steel, 125/125C Low/Reverse Clutch .070" (Waved) 1980-83	1	8637574
64135A	Steel, 125C Low/Reverse Clutch .078" (Waved) 1984-Up	1-2	8664141
64139	Steel Module, 125/125C 1980-E84	1	
64139B	Steel Module, 125C L1984-Up	1	

PART #	CLUTCH PRESSURE PLATES	QTY.	REFERENCE #
64142	Pressure Plate, 125/125C Forward Clutch .193" (Flat) 1980-84	1	8658146
64142A	Pressure Plate, 125C Forward & Direct Clutch .193" (Stepped) 1984-Up	1-2	8652562
64142B	Pressure Plate, 125C Forward & Direct Clutch .170" (Stepped) 1984-Up	1	
64142C	Pressure Plate, 125C Forward & Direct Clutch .150" (Stepped) 1984-Up	1	24200479
64142D	Pressure Plate, 125C Forward & Direct Clutch .130" (Stepped) 1984-Up	1	8664163
64142EB	Pressure Plate, 125C Forward & Direct Clutch .170" (Flat) 1984-Up	1	
64142EC	Pressure Plate, 125C Forward & Direct Clutch .183" (Flat) 1984-Up	1	
64142EE	Pressure Plate, 125C Forward & Direct Clutch .208" (Flat) 1984-Up	1	
64142EG	Pressure Plate, 125C Forward & Direct Clutch .235" (Flat) 1984-Up	1	
64154	Pressure Plate, 125/125C Low/Reverse Clutch 1980-Up	1	8631091

PART #	VALVE BODY KITS	QTY.	REFERENCE #
T64165	Valve Body Kit, 125/125C(Transgo)(Corrects/Prevents 3-2 Clunk, Lock-Up Shudder, Long Soft/No 2-3 Shift) 1980-Up	1	SK 125
S64165	Valve Body Kit, 125/125C(Superior) 1980-Up	1	K-125

PART #	OIL SEALING RINGS	QTY.	REFERENCE #
64175	Ring Kit, 125/125C (Metal) 1980-Up	1	
64175T	Ring Kit, 125/125C (Teflon) 1980-Up	1	
64176T	Ring, 125/125C Pump Slide (Teflon) 1980-Up	1	8631417
64177	Ring, 125/125C Input Shaft (Metal) 1980-Up	2	8631048
64177T	Ring, 125/125C Input Shaft (Teflon) 1980-Up	2	
64178T	Ring, 125 Turbine Shaft (Front & Rear)(Scarf Cut)(Teflon) 1980-81	1-3	8631211
64178AT	Ring, 125C Turbine Shaft (Front)(Solid)(Teflon) 1982-Up	1	8637170
64178BT	Ring, 125/125C Turbine Shaft (Rear)(Solid)(Teflon) 1980-Up	2	8643058
64179	Ring, 125/125C Driven Sprocket Support (Metal) 1980-Up	3	
64179T	Ring, 125/125C Driven Sprocket Support (Teflon) 1980-Up	3	8652535
54189BT	Ring, 125/125C Governor Shaft (Teflon) 1980-Up	1	8632588
64192	Ring, 125/125C 1-2 Accumulator Piston (Metal) 1980-87	1	8631895
64192T	Ring, 125/125C 1-2 Accumulator Piston (Teflon) 1980-87	1	
64352	Lathe Cut Seal, 125C 1-2 Accumulator Piston (Rubber) 1988-Up	1	8665807
64193T	Ring, 125/125C Band Apply Pin (Teflon) 1980-Up	1	8631105
64194T	Ring, 125 Intermediate Servo 1.260"OD (Inner)(Teflon) 1980-81	1	8631468
64194AT	Ring, 125/125C Intermediate Servo 1.676"OD (Inner)(Teflon) 1980-Up	1	8631470
54194ADT	Ring, 125/125C Intermediate Servo Piston (Outer)(Teflon) 1980-85	1	8631473
64194BT	Ring, 125/125C Intermediate Servo 1.500"OD (Inner)(Teflon) 1980-Up	1	8631469
A64538	Ring, 125/125C Pump Rotor (Metal) 1980-Up	2	8631279

PART #	WASHERS & BEARINGS	QTY.	REFERENCE #
64200	Washer Kit, 125/125C (Less Selectives) 1980-Up	1	8665957
64201A	Bearing Kit, 125/125C 1980-Up	1	

© Whatever It Takes Transmission Parts. Inc.

PART #	WASHERS & BEARINGS (Continued)	QTY.	REFERENCE #
64204A	Repair Kit, 125/125C Front Planet (4 Brass, 4 Batwing, & 8 Steel Round Washers)	1	K75904
64204AA	Repair Kit, 125/125C Front Planet (8 Brass Round Washers) 1980-Up	1	
64204B	Repair Kit, 125/125C Rear Planet (8 Brass & 8 Steel Washers) 1980-Up	1	K75905
64204C	Repair Kit, 125 Final Drive Planet (8 Brass & 8 Steel Washers)(Small) 1980-81	1	K75906
64204D	Repair Kit, 125C Final Drive Planet (8 Brass & 8 Steel Washers)(Large) 1982-Up	1	K75906A
64204D-1	Washer, 125C Final Drive Planet .550"ID (Steel) 1982-Up	1	QWS3030
64204D-2	Washer, 125C Final Drive Planet .550"ID (Bronze) 1982-Up	1	
64209	Bearing, 125/125C Pump Shaft (W/Out Seal Type) 1980-E84	1	8631277
64209A	Bearing W/Seal, 125C Pump Shaft L84-Up	1	8666375
64210	Spacer, 125/125C Pump Shaft 1980-E84	1	
64226	Washer, 125/125C Direct Drum to Support 1980-Up	1	8631029
64232	Washer, 125/125C Forward Drum to Hub 1.220"ID (Plastic) 1980-87	1	8652759
64232A	Washer, 125C Forward Drum to Hub 1.270"ID (Brass) 1987-Up	1	8664762
64235	Washer, 125/125C Front Planet to Hub 1980-Up	1	8631063
64238	Washer, 125/125C Front Planet to Sungear 1980-Up	1	8631062
64243	Spacer, 125/125C Low/Reverse Clutch Housing to Inner Race 1.00MM-1.10MM 1980-Up	1	8631241
64243A	Spacer, 125/125C Low/Reverse Clutch Housing to Inner Race 1.42MM-1.52MM 1980-Up	1	8631242
64243B	Spacer, 125/125C Low/Reverse Clutch Housing to Inner Race 1.84MM-1.94MM 1980-Up	1	8631243
64243C	Spacer, 125/125C Low/Reverse Clutch Housing to Inner Race 2.26MM-2.36MM 1980-Up	1	8631244
64243D	Spacer, 125/125C Low/Reverse Clutch Housing to Inner Race 2.68MM-2.78MM 1980-Up	1	8631245
64243E	Spacer, 125/125C Low/Reverse Clutch Housing to Inner Race 3.10MM-3.20MM 1980-Up	1	8631246
64244	Washer, 125/125C Sprag to Rear Planet	1	8631227
64244A	Bearing, 125/125C Sprag to Rear Planet (Late)	1	
54247A	Bearing, 125/125C Rear Sungear & Final Drive Sungear (Rear) 1980-Up	2	8628962
54251A	Washer, 125/125C Rear Planet to Rear Ring Gear 1980-Up	1	8628188
64254	Bearing, 125/125C Final Drive Sungear (Front) 1980-Up	1	8631116
64265	Washer, 125/125C Governor to Cover 1980-Up	1	8631766
64265A	Bearing, 125C Governor to Cover 1982-Up	1	8635490
T64275	Axle Stabilizer, 125/125C Bearing Type (OEM)(Teckpak) 1980-Up	1	
64278	Washer, 125/125C Drive Sprocket to Cover 1980-85	1	
64278A	Washer, 125C Drive Sprocket to Cover 1986-Up	1	8652868
64279A	Washer, 125C Drive Sprocket to Support 1986-Up	1	8652841
64280	Bearing, 125/125C Case Cover to Driven Sprocket (Use 44211C)	1	
44211C	Bearing, 125/125C Case Cover to Driven Sprocket (# 280) 1980-Up	1	9436851
64281	Washer, 125 Driven Sprocket (Rear) (.156" Thick) 1980-81	1	8631738
64281A	Washer, 125C Driven Sprocket (Rear) (.153" Thick) 1982-Up	1	8637227
64292	Bearing, 125/125C Differential to Case (1.443"ID, 2.250"OD) 1980-Up	1	8631362
64293	Spacer, 125/125C Differential to Case 1.45MM 1980-Up	1	8631420
S64293-10	Shim Set, 125 / 125C Differential To Case (10 Per Set) (Sonnax)	1	75410-10
64293A	Spacer, 125/125C Differential to Case 1.55MM 1980-Up	1	8631421
64293B	Spacer, 125/125C Differential to Case 1.65MM 1980-Up	1	8631422
64293C	Spacer, 125/125C Differential to Case 1.75MM 1980-Up	1	8631423
64293D	Spacer, 125/125C Differential to Case 1.85MM 1980-Up	1	8631424
64293E	Spacer, 125/125C Differential to Case 1.95MM 1980-Up	1	8631425
64293F	Spacer, 125/125C Differential to Case 2.05MM 1980-Up	1	8631426
64293G	Spacer, 125/125C Differential to Case 2.15MM 1980-Up	1	8631427
64293H	Spacer, 125/125C Differential to Case 2.25MM 1980-Up	1	8631428
64293J	Spacer, 125/125C Differential to Case 2.35MM 1980-Up	1	8631429
64295	Bearing, 125/125C Converter Reactor (Rear) 1980-Up	1	24214158
64298	Caged Needle Bearing, 125/125C Driven Sprocket Support 1980-Up	1	8631190
BS2030	Qwik Shim, 125/125C Front Planet Replacement Shim .030" (Rear) 1980-Up	AR	
TS2015	Qwik Shim, 125/125C Front Planet Replacement Shim .015" (Front) 1980-Up	AR	
TS2030	Qwik Shim, 125/125C Front Planet Replacement Shim .030" (Front) 1980-Up	AR	
BS4015	Qwik Shim, 125/125C Rear Planet Replacement Shim .015" (Rear) 1980-Up	AR	
BS4030	Qwik Shim, 125/125C Rear Planet Replacement Shim .030" (Rear) 1980-Up	AR	
TS4015	Qwik Shim, 125/125C Rear Planet Replacement Shim .015" (Front) 1980-Up	AR	
TS4030	Qwik Shim, 125/125C Rear Planet Replacement Shim .030" (Front) 1980-Up	AR	

PART #	GASKETS & RUBBER COMPONENTS	QTY.	REFERENCE #
64300	Gasket, 125/125C Bottom Pan 1980-Up	1	8631338
64301	Gasket, 125/125C Side Pan (Valve Body Cover) 1980-Up	1	8643573
64307	Gasket, 125/125C Intermediate Servo Cover 1980-Up	1	8631698
64308	Gasket, 125/125C Case Cover to Case (Small Center Gasket) 1980-Up	1	8660775
64313	O-Ring, 125/125C Pump Slide 1980-Up	1	8631504
54314B	Seal, 125/125C Pump Slide (Rubber) 1980-Up	1	8631283
54315B	Seal, 125/125C Pump Slide (Teflon) 1980-Up	1	8631977
64320	Gasket, 125/125C Valve Body (Upper & Lower) 1980-Up	2	8652065

© Whatever It Takes Transmission Parts. Inc.

64322	Gasket, 125C Aux. Valve Body L1984-Up	1	8643863
64322A	Gasket, 125C Aux. Valve Body 1982-E84	1	8653947
64322B	Gasket, 125C Aux. Valve Body (Orange Stripe) 1987-Up	1	8666380
64322C	Gasket, 125C Aux. Valve Body (Blue Stripe) 1988-Up	1	8666381
64324	Gasket, 125/125C Case Cover to Case (Large Outer Gasket) 1980-Up	1	8631756
64334	Lip Seal, 125/125C Forward Clutch (Inner) 1980-86	1	8652460
64334A	Lip Seal, 125C Forward Clutch (Inner) 1987-Up	1	
64335	Lip Seal, 125/125C Forward Clutch (Outer) 1980-86	1	8631013
64335A	Lip Seal, 125C Forward Clutch (Outer) 1987-Up	1	
64336	Lip Seal, 125/125C Direct Clutch (Inner) 1980-Up	1	8631403
64336C	Lip Seal, 125/125C Direct Clutch (Center) 1980-Up	1	8631014
64337B	Lip Seal, 125/125C Direct Clutch (Outer)(Long Lip) 1980-Up	1	8631592
64338	Lip Seal, 125/125C Low/Reverse Clutch (Inner) 1980-86	1	8631074
64338A	Lip Seal, 125C Low/Reverse Clutch (Inner) 1987-Up	1	
64339	Lip Seal, 125/125C Low/Reverse Clutch (Outer) 1980-Up	1	8631547
84345	Lathe Cut Seal, 125/125C Governor Cover 1980-Up	1	8660545
64352	Lathe Cut Seal, 125C 1-2 Accumulator Piston 1988-Up	1	8665807
64361A	Lip Seal, 125C Intermediate Servo (Outer) 1986-Up	1	8652446
64361AB	Lip Seal, 125C Intermediate Servo .856"ID (Inner) 1985-96	1	8652445
64361AC	Lip Seal, 125C Intermediate Servo 1.089"ID (Inner) 1985-Up	1	8652444
64361AD	Lip Seal, 125C Intermediate Servo 1.261"ID (Inner) 1985-Up	1	8652443
64361K	Lip Seal Set, 125/125C Intermediate Servo (Contains All Sizes) 1980-Up	1	
103368	O-Ring, 125/125C Speed-O Sleeve (Inner) 1980-Up	1	1240382
64369	O-Ring, 125/125C Speed-O Housing 1980-Up	2	
64369K	Seal Kit, 125C Speed-O Sensor (Gasket & 2 O-Rings) 1982-Up	1	
44371A	O-Ring, 125/125C Filler Tube 1980-Up	1	6264902
44371B	Boot, 125C Filler Tube 1980-Up	1	1259475
54373A	O-Ring, 125/125C Detent 1980-Up	1	358424
54373B	Boot, 125C Detent 1980-Up	1	255118260
64375	O-Ring, 125/125C Right Axle Stabilizer (OE Type) 1980-Up	1	
64379	Seal, 125/125C Filter (Late) 1986-Up	1	8652898
64380	O-Ring, 125/125C Turbine Shaft (Goes Behind Splines) 1982-Up	1	8662686
64382	O-Ring, 125/125C Reverse Oil Pipe to Case 1980-Up	1	8631331
64382W	Washer, 125/125C Reverse Oil Pipe O-Ring to Case 1980-Up	1	8631944
54386A	Seal/Cup Plug, 125/125C Low/Reverse Clutch Housing 1980-Up	1	8631577
64386B	Seal/Cup Plug, 125/125C Low/Reverse Clutch Housing (Long)(Updated) 1980-Up	1	
64386K	Seal Kit, 125/125C Low/Reverse Clutch Oil Pipe (O-Ring, Washer, & Seal/Cup Plug)	1	
64390	External Seal Kit, 125/125C	1	

PART #	TECHNICAL MANUALS	QTY.	REFERENCE #
64400	Tech Manual, 125C 1982-86	1	83-125TM
64400H	Update Handbook, 125C	1	83-125TM-U1

PART #	ELECTRICAL COMPONENTS	QTY.	REFERENCE #
64410	Switch, 125/125C Neutral Safety (Cast # 255) 1980-Up	1	
64410A	Switch, 125/125C Neutral Safety (Cast # 256) 1980-Up	1	
54411B	Switch, 125C 3rd Clutch Pressure (1 Prong) 1982-Up	1	8683502
64412	Switch, 125C 3rd Clutch Pressure (2 Prong) 1982-Up	1	8643710
64412A	Switch, 125C 3rd Clutch Pressure (1 Prong) 1982-Up (Use 54411B)	1	8683502
64412B	Switch, 125C 3rd Clutch Pressure (1 Button Prong) 1989-Up	1	8665355
64412C	Switch, 125C 3rd Clutch Pressure (1 Prong Push-In) 1989-Up	1	8666603
64416	Switch, 125C Governor Pressure 34 PSI 1982-Up	1	
64416A	Switch, 125C Governor Pressure 40 PSI (Purple) 1982-Up	1	8637296
64416AA	Switch, 125C Governor Pressure 42-46 PSI (2 Blade) 1982-Up	1	8643367
64416B	Switch, 125C Governor Pressure 46-50 PSI (2 Blade) 1982-Up	1	8643369
64416BA	Switch, 125C Governor Pressure 46 PSI (Silver) 1982-Up	1	8643368
64416C	Switch, 125C Governor Pressure (3 Blade) 1988-89	1	8664388
64416D	Switch, 125C Governor Pressure 50-54 PSI 1982-Up	1	8643362
84425	Solenoid, 125C TCC (Universal) 1982-Up (Rostra)	1	52-0210
T84425	Solenoid, 125C TCC (Universal) 1982-Up (Teckpak)	1	K84856U
64425A	Solenoid, 125C TCC (1 Wire to Case Connector)(1 Blade Connector) 1982-Up	1	8689903
64425B	Solenoid, 125C TCC (2 Wire to Case Connector)(2 Blade Connector) 1982-Up	1	8689901
64425C	Solenoid, 125C TCC (4 Wire to Case Connector)(3 Blade, 1 Round) 1982-Up	1	8665016
64425D	Solenoid, 125C TCC (4 Wire to Case Connector)(4 Blade Connector) 1982-Up	1	8689902
64425E	Solenoid, 125C TCC (3 Wire to Case Connector)(2 Blade Connector) 1982-Up	1	8665377
64425G	Solenoid, 125C TCC (Pt, Lg 1, W/Ground) 1982-Up	1	8652378
64425H	Solenoid, 125C TCC (3 Wire to Case Connector)(4 Blade Connector) 1982-Up	1	8652376
T84425K	Solenoid, 125C TCC (6 Pack With Free Posi-Twist Travel Pack) 1982-Up (Teckpak)	1	K84856U

© Whatever It Takes Transmission Parts. Inc.

PART #	ELECTRICAL COMPONENTS (Continued)	QTY.	REFERENCE #
64437A	Switch, 125C Temperature Control 1989-Up	1	8666603
64441	Element Plate Kit, 125/125C Thermostatic Element (Goes on Channel Plate) 1980-Up	1	8631956
64441-2	Pin, 125/125C Thermostatic Element 1980-Up	1	8631687
44442A	Universal Adjustment Vacuum Switch, 180C (1" to 6" Of Vacuum)(Superior)	1	
44442B	Universal Adjustment Vacuum Switch, 180C (6" to 22" Of Vacuum)(Superior)	1	
64444A	Connector, 125C Case (Round 5 Wire) 1983-Up	1	8665015
74444	Connector, 125C Case (2 Prong) 1982-Up	1	12300205
74444A	Connector, 125C Case (3 Prong) 1982-Up	1	8634383
84444	Connector, 125C Case (4 Prong Square) 1989-Up	1	8662395
44445	Wire Harness, 125C External (2 Wire) 1982-Up	1	
64445	Wire Harness, 125C External (4 Wire) 1989-Up	1	24202567
74445	Wire Harness, 125C External (3 Wire) 1982-Up	1	
84445	Wire Harness, 125C External (5 Wire) 1983-Up	1	8662425
64445K	Repair Kit, 125C External Wire Harness (Square 4 Prong)(Plugs Into Connector) 1989-Up	1	
84445K	Repair Kit, 125C External Wire Harness (Square 5 Prong)(Plugs Into Connector) 1983-Up	1	
64446C	Wire Harness, 125C Aux. Valve Body 1982-Up	1	8637264
LU1	Lock-Up Delay Module For Vehicle W/Speed Sensor 1982-Up	1	LU1
LU1-4226	LU1 Sensor, GM FWD W/Extension Cable	1	LU1-4226

PART #	MISC. COMPONENTS	QTY.	REFERENCE #
M462F	Union, 5/16"	1	
64480	Capsule W/Ck Ball, 125/125C Forward Drum 1980-Up	1	8633748
74482P	Capsule W/Ck Ball, 125/125C Direct Drum 1980-Up	1	8628732
64483A	Cup Plug, 125/125C Valve Body (Orifice)(Between Solenoid & Aux. Valve Body) 1982-Up	1	8624826
64483C	Cup Plug, 125/125C Park Pawl Shaft 1980-Up	1	8631016
64483T	Cup Plug, 125/125C 3rd Oil 1980-Up	1	
64484A	Cup Plug, 125/125C Servo (Orifice)(in Case) 1980-Up	1	8611710
44487	E-Clips, GM	1	
T54497D	Detent Cable, 125 (2.8L) & 125/125C (3.1L) (Overall Length 58") 1980-85 (Techpak)	1	K65553
T54497U	Detent Cable, 125/125C (Universal) 1980-Up (Techpak)	1	K65940U
T54497UA	Detent Cable, 125C Self Adjusting Universal (Teckpak)	1	
T74497C-1	Repair End, 125/125C Detent Cable 1980-Up (Teckpak)	1	K77909U

PART #	HARD PARTS	QTY.	REFERENCE #
64500	Pump, 125 W/Valve Body (W/Out Tube) 1980-81	1	
64500A	Pump, 125 W/Valve Body (With Tube) 1980-81	1	
64500B	Pump, 125C W/Valve Body 1982-84	1	
64500C	Pump, 125C W/Valve Body (1 Solenoid & 1 Switch) 1985-Up (Square 2 Wire Connector at End of Solenoid Wire Harness)	1	
64500D	Pump, 125C W/Valve Body (1 Solenoid & 2 Switches) 1987-Up (Round 4 Wire Connector at End of Solenoid Wire Harness)(All 1987-Up Pumps Will Interchange if The Original Solenoid Wiring is Used)	1	
64500DA	Pump, 125C W/Valve Body (1 Solenoid & 2 Switches) 1987-Up (W/Screw-in 3rd Pressure Switch)(Round 4 Wire Connector at End of Solenoid Wire Harness)(All 87-Up Pumps Will Interchange if The Original Solenoid Wiring Is Used)	1	24200514
64500DB	Pump, 125C W/Valve Body (1 Solenoid & 2 Switches) 1987-Up (Square 3 Wire Connector at End of Solenoid Wire Harness)(All 1987-Up Pumps Will Interchange if The Original Solenoid Wiring is Used)	1	
64500DC	Pump, 125C W/Valve Body (1 Solenoid)(With 1 Screw-In & 1 Push-In Switch) 1987-Up (This Pump Will Retro Fit All 1987-Up Pumps)	1	

PART #	PUMP COMPONENTS	QTY.	REFERENCE #
64209	Bearing, 125/125C Pump Shaft (W/Out Seal Type) 1980-E84	1	8631277
64209A	Bearing W/Seal, 125/125C Pump Shaft L84-Up	1	8666375
54314B	Seal, 125/125C Pump Slide (Rubber) 1980-Up	1	8631283
54315B	Seal, 125/125C Pump Slide (Teflon) 1980-Up	1	8631877
64541	Sleeve, 125/125C Pump Cover (Tin) 1980-Up	1	

PART #	HARD PARTS (Continued)	QTY.	REFERENCE #
64529	Converter Reactor, 125 1980-81	1	8637415
64529A	Converter Reactor, 125C 1982-Up	1	8644036
64531	Rotor Kit, 125 (20 Spline Rotor)(.708") 1980-81	1	
64531B	Rotor Kit, 125C (15 Spline Rotor)(.708") 1982-Up	1	

© Whatever It Takes Transmission Parts. Inc.

64531BK	Rotor Kit Conversion, 125 (Contains; Pump Shaft, 15 Spline Rotor, & Vanes) (Converts 20 Spline to 15 Spline Rotor) 1980-82	1	
64532	Rotor, 125 (20 Spline)(.708") 1980-81	1	8631497
64532A	Rotor, 125C (15 Spline)(.708") 1982-Up	1	8652247
64533	Vane, 125/125C 1980-Up	7	8631280
64533K	Vane & Ring Kit, 125/125C 1980-Up	1	
64534	Pump Slide, 125/125C 1980-Up	1	8631802
64535	Pivot Pin, 125/125C Pump Slide 1980-Up	1	8628273
64536	Spring, 125/125C Pump Slide 1980-Up	1	
64538	Ring, 125/125C Pump Rotor to Vanes 1980-Up	2	8631279
64541	Sleeve, 125/125C Pump Cover (Tin) 1980-Up	1	
64547	Apply Ring, 125/125C Forward Clutch 1980-Up	1	8631376
64549	Apply Ring, 125/125C Reverse Clutch 1980-Up	1	8643490
64554	Drum, 125 Forward Clutch (Uses Washer # 232 W/1.220"ID) 1980-81	1	8653977
64554A	Drum, 125/125C Forward Clutch (Uses Washer # 232 W/1.220"ID) 1981-84	1	8664982
64554B	Drum, 125C Forward Clutch (Uses Washer # 232 W/1.220"ID) 1985-86	1	
64554C	Drum, 125C Forward Clutch (Uses Washer # 232 W/1.270"ID) 1987-Up	1	9664982
64555	Drum, 125 Direct Clutch (Narrow)1980-81	1	
64555A	Drum, 125/125C Direct Clutch (Wide)(Can Use 64555B) 1980-84	1	8653983
64555AK	Drum & Band Kit, 125/125C Direct Clutch (W/Piston & Lip Seals) 1980-84	1	8653978
64555B	Drum, 125C Direct Clutch (Wide)(4 & 5 Clutch)(Can Use 64555A) 1985-Up	1	8653971
64564	Piston Kit, 125/125C Forward Drum 1980-Up	1	
64565	Piston Kit, 125/125C Direct Drum 1980-Up	1	
64567	Piston Kit, 125/125C Low/Reverse Clutch (Center Support)(Steel Piston) 1980-92	1	8653916
64567A	Piston Kit, 125C Low/Reverse Clutch (Center Support)(Aluminum Piston) 1993-Up	1	
64582	Planet, 125/125C Front (Input) 1980-Up	1	8686142
64584	Planet, 125/125C Rear (Reaction) 1980-Up	1	8660048
64592	Ring Gear, 125/125C Front Planet 1980-Up	1	8631049
64594	Ring Gear, 125/125C Rear Planet 1980-Up	1	8652236
64598	Ring Gear, 125/125C Differential 1980-Up	1	8652701
64612	Sun Gear, 125/125C Front Planet 1980-Up	1	8652644
64614	Sun Gear, 125/125C Rear Planet 1980-Up	1	8631845
84618	Sun Gear, 125/125C Differential (38 Teeth) 1980-Up	1	8658040
84618A	Sun Gear, 125/125C Differential (34 Teeth) 1980-Up	1	24209169
84618B	Sun Gear, 125/125C Differential (30 Teeth) 1980-Up	1	8644114
64622	Shell, 125 Input 1980-E81	1	
64622A	Shell, 125/125C Input (W/Scoops & Roll Pins) L1981-Up	1	8652435
64622B	Shell, 125/125C Input (W/Scoops, No Roll Pins) L1981-86	1	
64632	Center Support, 125 Low/Reverse Clutch Housing 1980-81	1	
64632A	Center Support, 125C Low/Reverse Clutch Housing 1982-84	1	8653915
64632B	Center Support, 125C Low/Reverse Clutch Housing 1985-Up	1	8666656
64652	Sprag, 125/125C Low Roller Clutch 1980-Up	1	8652403
64662	Inner Race, 125/125C Low Roller Clutch 1980-Up	1	8641093
64671A	Shaft, 125 Pump (20 Spline) 1980-81	1	8643768
64671AA	Shaft, 125 Pump (Conversion)(15 Spline) 1980-81	1	
64671B	Shaft, 125C Pump (15 Spline W/Thick Steel Race) 1982-E84	1	8643627
64671C	Shaft, 125C Pump (15 Spline W/Thin Steel Race) L1984-Up	1	8643764
64673	Shaft, 125 Turbine 1980-81	1	8631207
63673A	Shaft, 125C Turbine 1982-Up	1	8637166
64674	Shaft, 125/125C Intermediate Sungear (Final Drive) 1980-Up	1	8652388
64678	Shaft, 125/125C Output 1980-Up	1	8631640
64680	Governor, 125 1980-81	1	8631931
64680A	Governor, 125C Electronic (13 Tooth Pick-Up) 1982-Up	1	8652927
64680B	Governor, 125C Electronic (14 Tooth Pick-Up) 1982-Up	1	8637949
64680C	Governor, 125C Electronic (8 Tooth Pick-Up) 1982-Up	1	
64680D	Governor, 125C Electronic (15 Tooth Pick-Up) 1982-Up	1	
64680E	Governor, 125C Electronic (11 Tooth Pick-Up) 1982-Up	1	
64683A	Gear, 125/125C Governor Drive 1980-Up	1	8631571
64686	Cover, 125/125C Governor (Washer Type) 1980-82	1	8632985
64686A	Cover, 125C Governor (Bearing Type) 1982-Up	1	8652919
64686B	Cover, 125C Governor (Bearing Type W/Needles) 1982-Up	1	8652920
64686E	Cover, 125C Governor (Electronic Type) 1982-Up	1	
64698A	Oil Weir, 125 W/Bracket 1980-81	1	
64700	Chain, 125/125C Drive (Narrow) 1980-83	1	8643337
84700	Chain, 125C Drive (Wide)(With D Type Pins) 1984-Up	1	8660099
84700A	Chain, 125C Drive (Wide)(Round Pins) 1984-Up	1	
64701	Chain Snubber, 125/125C 1980-Up	1	

© Whatever It Takes Transmission Parts. Inc.

PART #	HARD PARTS (Continued)	QTY.	REFERENCE #
64705	Sprocket, 125/125C Drive (33 Narrow Teeth) 1980-83	1	8631197
64705A	Sprocket, 125/125C Drive (33 Wide Teeth) 1984-Up	1	8637172
64705D	Sprocket, 125/125C Drive (35 Narrow Teeth) 1980-83	1	8631740
64705E	Sprocket, 125C Drive (35 Wide Teeth) 1984-Up	1	8643210
64705F	Sprocket, 125/125C Drive (37 Narrow Teeth) 1980-83	1	8631741
64705G	Sprocket, 125C Drive (37 Wide Teeth) 1984-Up	1	8643211
64706	Sprocket, 125/125C Driven (35 Teeth) (Narrow .655” Thick) 1980-83	1	8643446
64706A	Sprocket, 125C Driven (35 Teeth) (Wide .780” Thick) 1984-Up	1	8643223
64706B	Sprocket, 125/125C Driven (37 Teeth) (Narrow .655” Thick) 1980-83	1	8643447
64706C	Sprocket, 125C Driven (37 Teeth) (Wide .780” Thick) 1984-Up	1	8643224
64706D	Sprocket, 125/125C Driven (32 Teeth) (Narrow .655” Thick) 1980-83	1	8643444
64706E	Sprocket, 125C Driven (32 Teeth) (Wide .780” Thick) 1984-Up	1	8643221
64706F	Sprocket, 125/125C Driven (33 Teeth) (Narrow .655” Thick) 1980-83	1	8643445
64706G	Sprocket, 125C Driven (33 Teeth) (Wide ..780” Thick) 1984-Up	1	8643222
64713	Support, 125 Driven Sprocket 1980-81	1	8631954
64713A	Support, 125C Driven Sprocket 1982-84	1	8637224
64713B	Support, 125C Driven Sprocket 1985-Up	1	8652564
64715	Differential, 125/125C (38T)(.705”OD Chrome Cross Pin)(2”OD Brg # 247) 2.84 Ratio	1	8653941
64715A	Differential, 125/125C (38T)(.705”OD Chrome Cross Pin)(2 1/8”OD Brg # 247) 2.84 Ratio	1	
64715B	Differential, 125/125C (38T)(.705”OD Black Cross Pin) 2.84 Ratio	1	
64715C	Differential, 125/125C (34T)(.705”OD Chrome Cross Pin) 3.06 Ratio	1	8643990
64715D	Differential, 125/125C (30T)(.705”OD Black Cross Pin) 3.33 Ratio	1	8643963

PART #	VALVE BODY COMPONENTS	QTY.	REFERENCE #
64741C-3	Spring, 125C Lock-Up 1982-Up	1	8637888
64741E-6	Plug, 125C Aux. Valve Body 1982-Up	1	
64741M-1	Valve, 125 Manual 1980-81	1	8666494
64741MA-1	Valve, 125C Manual 1982-Up	1	
64741M-6	Plug, 125/125C Manual Valve	1	8631165
64741M-6A	Plug, 125/125C Manual Valve	1	8637091
A64741S-1	Valve, 125/125C 2-3 Shift 1980-Up	1	
A64741SK	Valve Kit, 125/125C 2-3 Shift (W/Spring) 1980-Up	1	
A64741T-4	Pin, 125/125C TV Boost (Hardened) 1980-Up	1	

PART #	HARD PARTS (Continued)	QTY.	REFERENCE #
64744	Aux. Valve Body, 125C 1982-89	1	
64744A	Aux. Valve Body, 125C 1990-Up	1	
64745	Cover, 125C Valve Body 1982-84	1	
64745A	Cover, 125C Valve Body 1985-Up	1	8643645
64745B	Cover, 125 Valve Body 1980-81	1	8631938
64747	Plate, 125/125C Valve Body Separator 1980-Up	1	8643044
64755	Case Cover, 125 1980-E81	1	8631996
64755A	Case Cover, 125C (W/Flat Raised Boss)(1 Bolt Cable)(The Flat Boss is 2” to The Right of The Axle Seal W/1 Threaded Hole) 1982-up	1	8631997
64755B	Case Cover, 125C (W/Flat Raised Boss)(2 Bolt Cable)(The Flat Boss is 2” to The Right of The Axle Seal W/1 Threaded Hole) 1982-up	1	
64755C	Case Cover, 125C (W/Angled Raised Boss)(1 Bolt Cable)(The Angled Boss is 2” to The Right of The Axle Seal W/1 Threaded Hole) 1982-Up	1	
64755D	Case Cover, 125C (W/Angled Raised Boss)(2 Bolt Cable)(The Angled Boss is 2” to The Right of The Axle Seal W/1 Threaded Hole) 1982-Up	1	
64755S	Sleeve, 125/125C Case Cover (Channel Plate) 1980-Up	1	
64760	Case, 125 Flat Top Bell 1980-81	1	8631974
64760A	Case, 125C Flat Top Bell (Starter at 4:00)(No Neutral Safety Mounting Holes) 1982-Up	1	8653917
64760B	Case, 125C Flat Top Bell (Starter at 4:00)(W/Neutral Safety Mounting Holes) 1982-Up	1	
64760C	Case, 125C Round Bell (Starter at 10:00)(No Neutral Safety Mounting Holes) 1984-Up	1	8631975
64760D	Case, 125C Round Bell (Starter at 10:00)(W/Neutral Safety Mounting Holes) 1984-Up	1	8653918
64760E	Case, 125C Round Bell (Starter at 1:00)(No Neutral Safety Mounting Holes) 1984-Up	1	
64760F	Case, 125C Round Bell (Starter at 1:00)(W/Neutral Safety Mounting Holes) 1984-Up	1	

PART #	CASE COMPONENTS	QTY.	REFERENCE #
64090	Axle Stabilizer, 125/125C Right Axle (Bushing Type) 1980-Up	1	
T64275	Axle Stabilizer, 125/125C Right Axle (Bearing Type)(Teckpak) 1980-Up	1	
64698A	Oil Weir, 125 W/Bracket 1980-82	1	
64701	Chain Snubber, 125/125C 1980-Up	1	
64761-4	Nail, 125/125C Holds Manual Valve in Case 1980-Up	1	8631532

© Whatever It Takes Transmission Parts. Inc.

PART #	HARD PARTS (Continued)	QTY.	REFERENCE #
64916-5	Anchor Plug, 125/125C Band (Plactic) 1980-Up	1	8637640
64765	Pan, 125/125C Bottom 1980-83	1	8653942
64765A	Pan, 125C Bottom 1984-Up	1	8643574
64766	Pan, 125 Side 1980-81	1	
64766A	Pan, 125/125C Side 1982-83	1	8653943
64766B	Pan, 125C Side 1984-Up	1	8643575
64774	Housing, 125/125C Driven Speed-O Gear (1” Aluminum Bullitt) 1980-Up	1	25519848
64775	Bolt, 125/125C Converter (Metric) 1980-Up	3	
34797B	Nut, 125/125C Holds External Shift Lever (Metric) 1980-Up	1	
64842	Clip, 125/125C Holds Speed-O Housing to Cover 1980-Up	1	3708148
64847	Gear, 125/125C Speed-O Drive (10 Teeth)(Green) 1980-Up	1	
64847D	Gear, 125/125C Speed-O Drive (27 Teeth)(Blue) 1980-Up	1	
64847E	Gear, 125/125C Speed-O Drive (28 Teeth)(Yellow) 1980-Up	1	
64847P	Reluctor, 125C 8 Teeth	1	8666642
64847PA	Reluctor, 125C 11 Teeth	1	8666643
64847PB	Reluctor, 125C 14 Teeth	1	8666644
64848	Gear, 125/125C Speed-O Driven (28 Teeth)(Yellow) 1980-Up	1	
64848A	Gear, 125/125C Speed-O Driven (29 Teeth)(Green) 1980-Up	1	
64848B	Gear, 125/125C Speed-O Driven (30 Teeth)(Blue) 1980-Up	1	
64848C	Gear, 125/125C Speed-O Driven (31 Teeth)(White) 1980-Up	1	
64848D	Gear, 125/125C Speed-O Driven (27 Teeth) (Black)	1	
64848E	Gear, 125/125C Speed-O Driven (28 Teeth) (Yellow)	1	
64876	Snap Ring, 125/125C Holds Forward & Direct Clutch Pressure Plate in Drum 1980-Up	1-3	8652055
64877	Snap Ring, 125/125C Holds Forward Clutch Spring Retainer in Drum 1980-Up	1	8631948
64877K	Snap Ring Kit, 125/125C (Contains; # 877, 880, 884, & 887) 1980-Up	1	
64878	Snap Ring, 125/125C Holds Direct Clutch Pressure Plate in Drum (Use 64876) 1980-Up	1	8652055
64879	Snap Ring, 125/125C Holds Direct Clutch Retainer in Drum (Use 64876) 1980-Up	1	8652055
64880	Snap Ring, 125/125C Holds Drive Sprocket to Turbine Shaft 1980-Up	1	8631210
64883	Snap Ring, 125/125C Holds Low/Reverse Clutch Housing in Case 1980-Up	1	8631078
64884	Snap Ring, 125/125C Holds Low/Reverse Clutch Retainer In 1980-92	1	
64884A	Snap Ring, 125/125C Holds Low/Reverse Clutch Housing Retainer in (Spiral) 1993-Up	1	8631948
64885	Snap Ring, 125/125C Holds Low/Reverse Clutches in Case 1980-Up	1	8631549
64886A	Snap Ring, 125/125C Holds Input Shell to Sungear .091” 1980-Up	1	8631602
64886B	Snap Ring, 125/125C Holds Input Shell to Sungear .098” 1980-Up	1	8631603
64886C	Snap Ring, 125/125C Holds Input Shell to Sungear .106” 1980-Up	1	8631604
64886D	Snap Ring, 125/125C Holds Input Shell to Sungear .111” 1980-Up	1	8631605
64886E	Snap Ring, 125/125C Holds Input Shell to Sungear .118” 1980-Up	1	8631606
64886F	Snap Ring, 125/125C Holds Input Shell to Sungear .125” 1980-Up	1	8631607
64886G	Snap Ring, 125/125C Holds Input Shell to Sungear .132” 1980-Up	1	8631608
64886H	Snap Ring, 125/125C Holds Input Shell to Sungear .138” 1980-Up	1	8631609
44887	Snap Ring, 125/125C Holds Speed-O Seal in Speed-O Housing 1980-Up	1	
64887	Snap Ring, 125/125C Holds Output Shaft to Differential 1980-Up	2	8631948
64888	Snap Ring, 125/125C Holds Pinion Pins to Differential Housing (Spiral)(Use 76874A)	1	11501326
76874A	Snap Ring, 125/125C Holds Pinion Pins to Differential Housing (Spiral) 1980-Up	1	11501326
64890	Snap Ring, 125/125C Holds Final Drive Ring Gear in Case (Use 64883) 1980-Up	1	
84895	Snap Ring, 125/125C Output Shaft To Differential (Flat) 1983-Up	1	
64899A	Snap Ring, 125/125C Forward Drum to Driven Sprocket Support 1.83-1.93MM 1980-Up	1	8631258
64899B	Snap Ring, 125/125C Forward Drum to Driven Sprocket Support 2.03-2.13MM 1980-Up	1	8631259
64899C	Snap Ring, 125/125C Forward Drum to Driven Sprocket Support 2.23-2.33MM 1980-Up	1	8631260
64899D	Snap Ring, 125/125C Forward Drum to Driven Sprocket Support 2.43-2.53MM 1980-Up	1	8631261
64899E	Snap Ring, 125/125C Forward Drum to Driven Sprocket Support 2.63-2.73MM 1980-Up	1	8631262
64905	Servo Assembly, 125/125C Intermediate 1.260”ID 1980-Up	1	
64905A	Servo Assembly, 125/125C Intermediate 1.495”ID 1980-Up	1	8652901
64905B	Servo Assembly, 125/125C Intermediate 1.672”ID 1980-Up	1	
64906	Spring, 125/125C Intermediate Servo Cushion 1980-Up	1	8652057
64906A	Spring, 125/125C Intermediate Servo Cushion (Red) 1980-Up	1	8631463
64907	Piston, 125/125C Intermediate Servo 1980-Up	1	8652900
64908	Pin, 125/125C Intermediate Servo (No Groove) 1980-Up	1	8631923
64908A	Pin, 125/125C Intermediate Servo (1 Groove) 1980-Up	1	8631924
64908B	Pin, 125/125C Intermediate Servo (2 Groove) 1980-Up	1	8631925
64909	Cover, 125/125C Intermediate Servo 1.260”ID 1980-Up	1	8631702
64909A	Cover, 125/125C Intermediate Servo 1.495”ID 1980-Up	1	8631703
64909B	Cover, 125/125C Intermediate Servo 1.672”ID 1980-Up	1	8631704
64916-5	Anchor Plug, 125/125C Band 1980-Up	1	
64925C	Accumulator Assembly, 125C 1-2 Accumulator 1980-Up	1	

© Whatever It Takes Transmission Parts. Inc.

PART #	HARD PARTS (Continued)	QTY.	REFERENCE #
64926	Spring, 125/125C 1-2 Accumulator 1980-85 (Purple) 1980-Up	1	8631168
64926A	Spring, 125C 1-2 Accumulator 1985-Up (Purple) 1980-Up	1	
64927	Piston, 125/125C 1-2 Accumulator 1980-Up	1	8665920
64928	Pin, 125/125C 1-2 Accumulator 1980-Up	1	8665840
64952	Valve, 125/125C 2-3 Shift (Accumulator) 1980-Up	1	8643964
64952K	Valve & Spring Kit, 125/125C 2-3 Shift Fix (Accumulator) 1980-Up	1	
64958	Spacer, 125/125C Final Drive (Tin) 1980-Up	1	8652022
64963	Insert, 125/125C Under The Forward Piston 1980-Up	1	8643606
64964	Piston, 125/125C Forward Clutch 1980-Up	1	8637973
64965	Piston, 125/125C Direct Clutch 1980-Up	1	8631009
64967	Piston W/Insert, 125/125C Low/Reverse Clutch (Steel) 1980-92	1	
64967A	Piston W/Insert, 125C Low/Reverse Clutch (Aluminum) 1993-Up	1	
64974	Spring, 125/125C Forward Clutch Return 1980-Up	1	
64975	Spring W/Retainer, 125/125C Direct Clutch 1980-Up	1	8664636
54977A	Spring, 125/125C Low/Reverse Clutch Return (Waved) 1980-92	1	8628222
64977	Spring, 125/125C Low/Reverse Clutch Return (Diaphragm)(Update) 1993-Up	1	8683616
64987	Retainer, 125/125C Low/Reverse Clutch 1980-92	1	8631075
64991	Manual Shaft, 125 (11 3/4” Long) 1980-81	1	8637970
64991A	Manual Shaft, 125C (12” Long) 1982-Up	1	
64993	Linkage Assembly, 125/125C Internal 1980-Up	1	8682973
64994	Park Rod Actuator, 125/125C 1980-Up	1	
64995	Park Pawl Assembly, 125/125C 1980-Up	1	
44996A	Fittings, 125/125C Cooler Line 1980-Up	2	
64997	T.V. Bracket, 125/125C 1980-Up	1	8631685
64997-7	Wire Link, 125/125C Linkage Assembly to T.V. Cable 1980-Up	1	
64999	Oil Tube Set, 125/125C 1980-Up	1	8664493

© Whatever It Takes Transmission Parts. Inc.

© Whatever It Takes Transmission Parts. Inc.

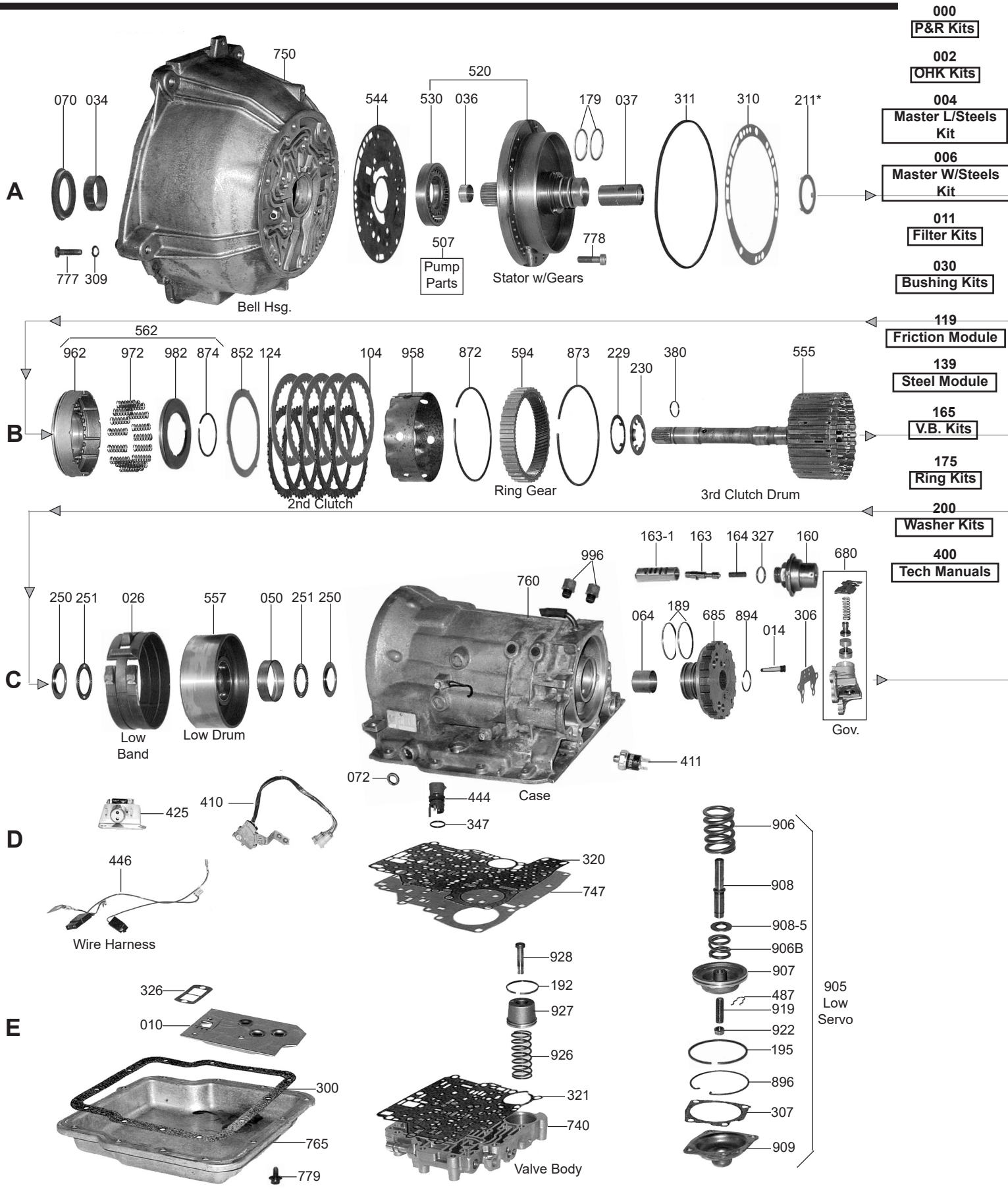

000 P&R Kits
002 OHK Kits
004 Master L/Steels Kit
006 Master W/Steels Kit
011 Filter Kits
030 Bushing Kits
119 Friction Module
139 Steel Module
165 V.B. Kits
175 Ring Kits
200 Washer Kits
400 Tech Manuals

© Whatever It Takes Transmission Parts. Inc.

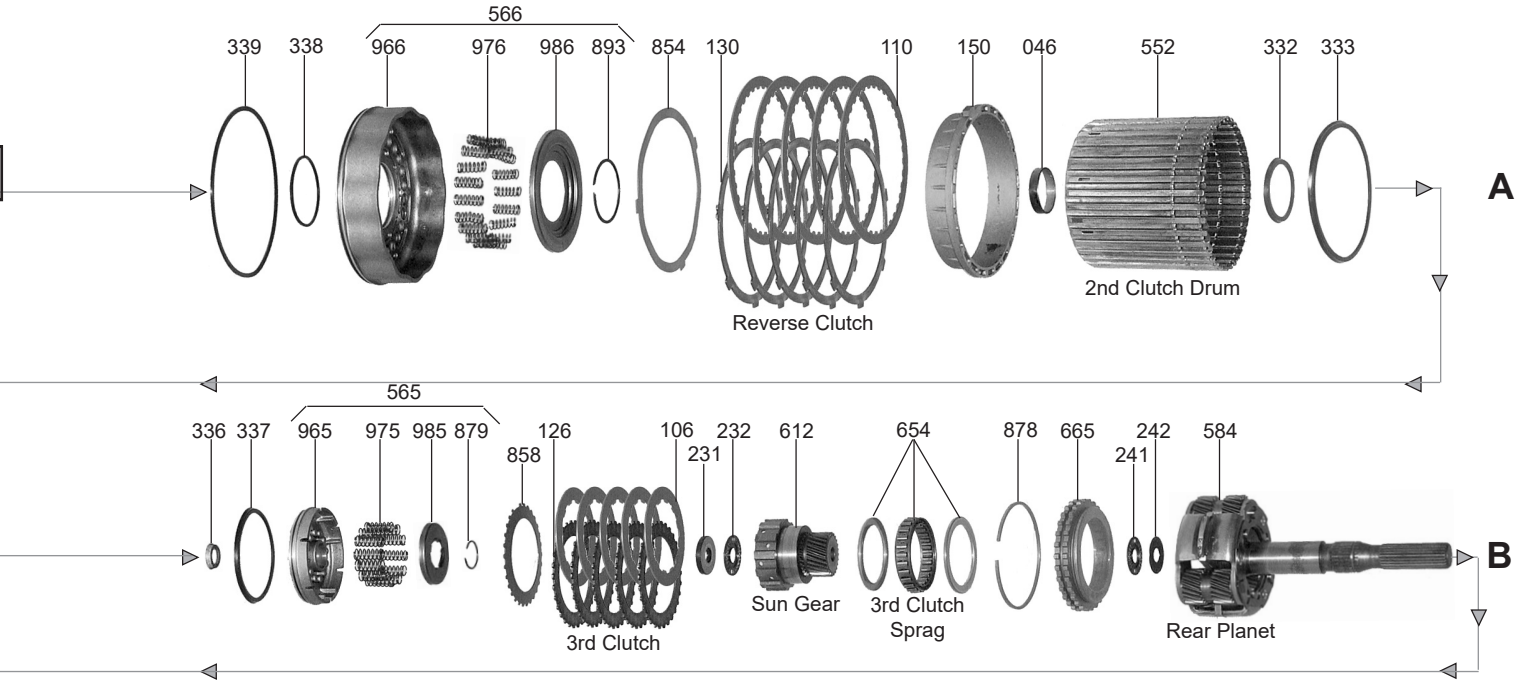

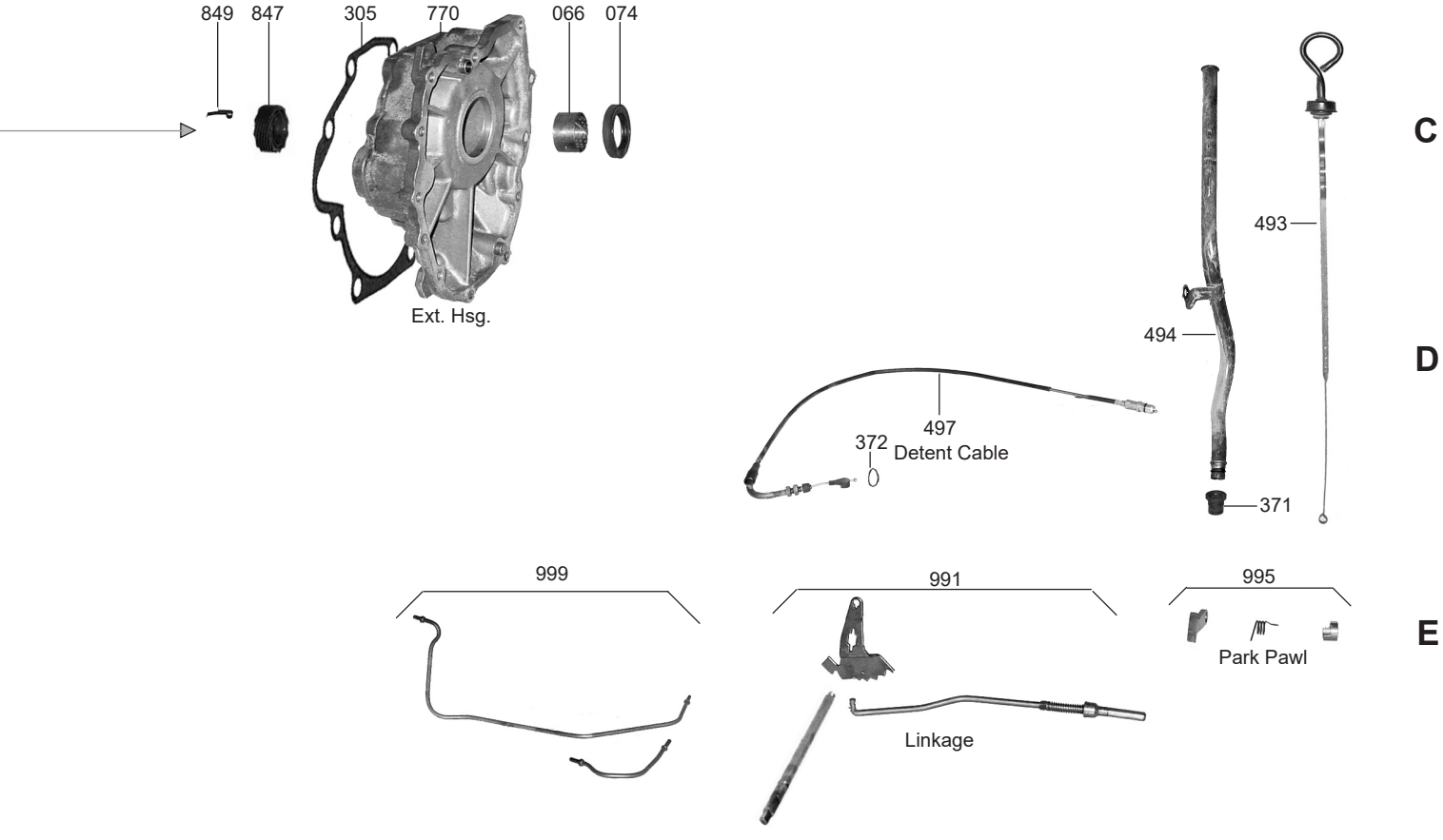

© Whatever It Takes Transmission Parts. Inc.

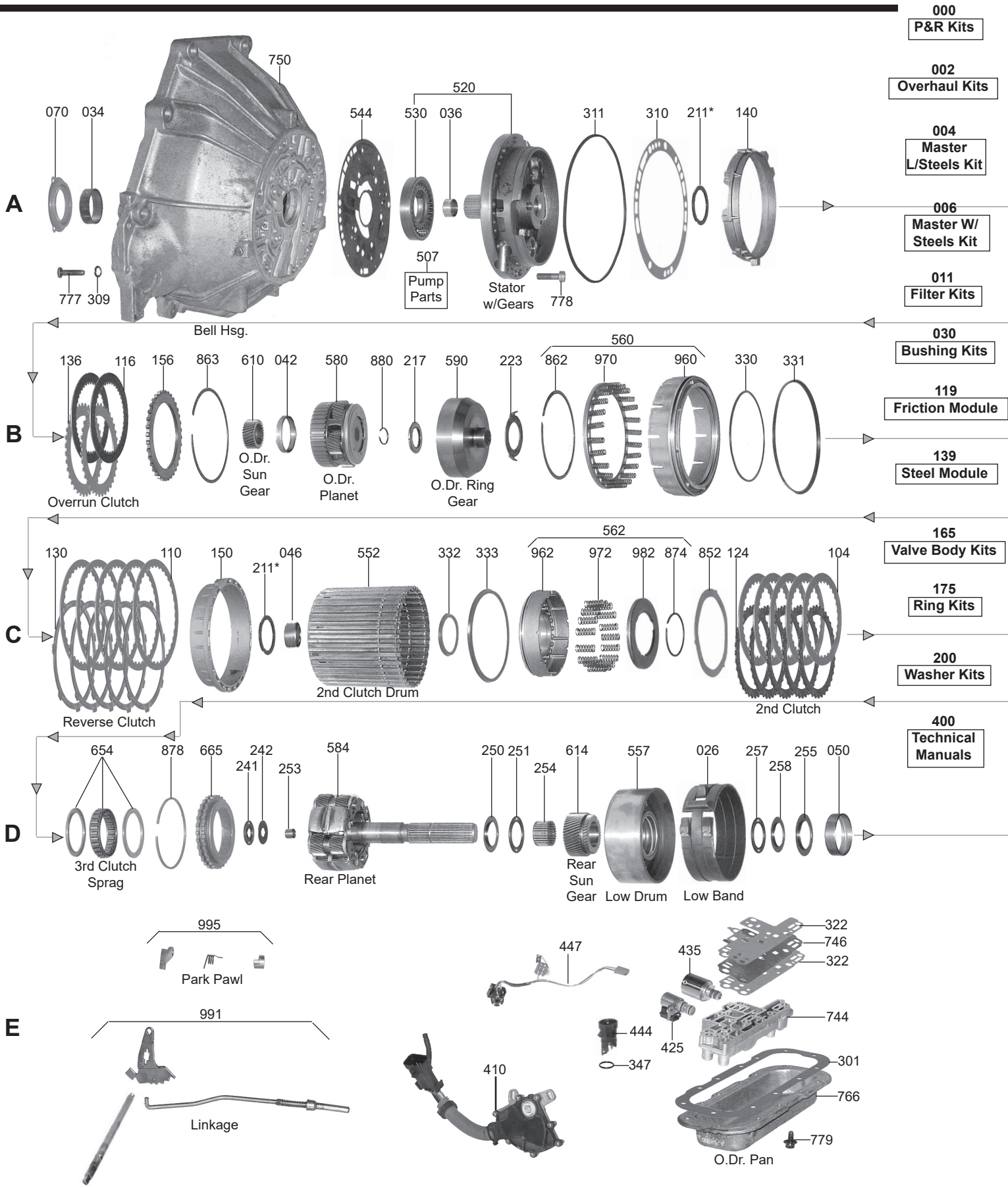

000 P&R Kits

002 Overhaul Kits

004 Master L/Steels Kit

006 Master W/ Steels Kit

011 Filter Kits

030 Bushing Kits

119 Friction Module

139 Steel Module

165 Valve Body Kits

175 Ring Kits

200 Washer Kits

400 Technical Manuals

© Whatever It Takes Transmission Parts. Inc.

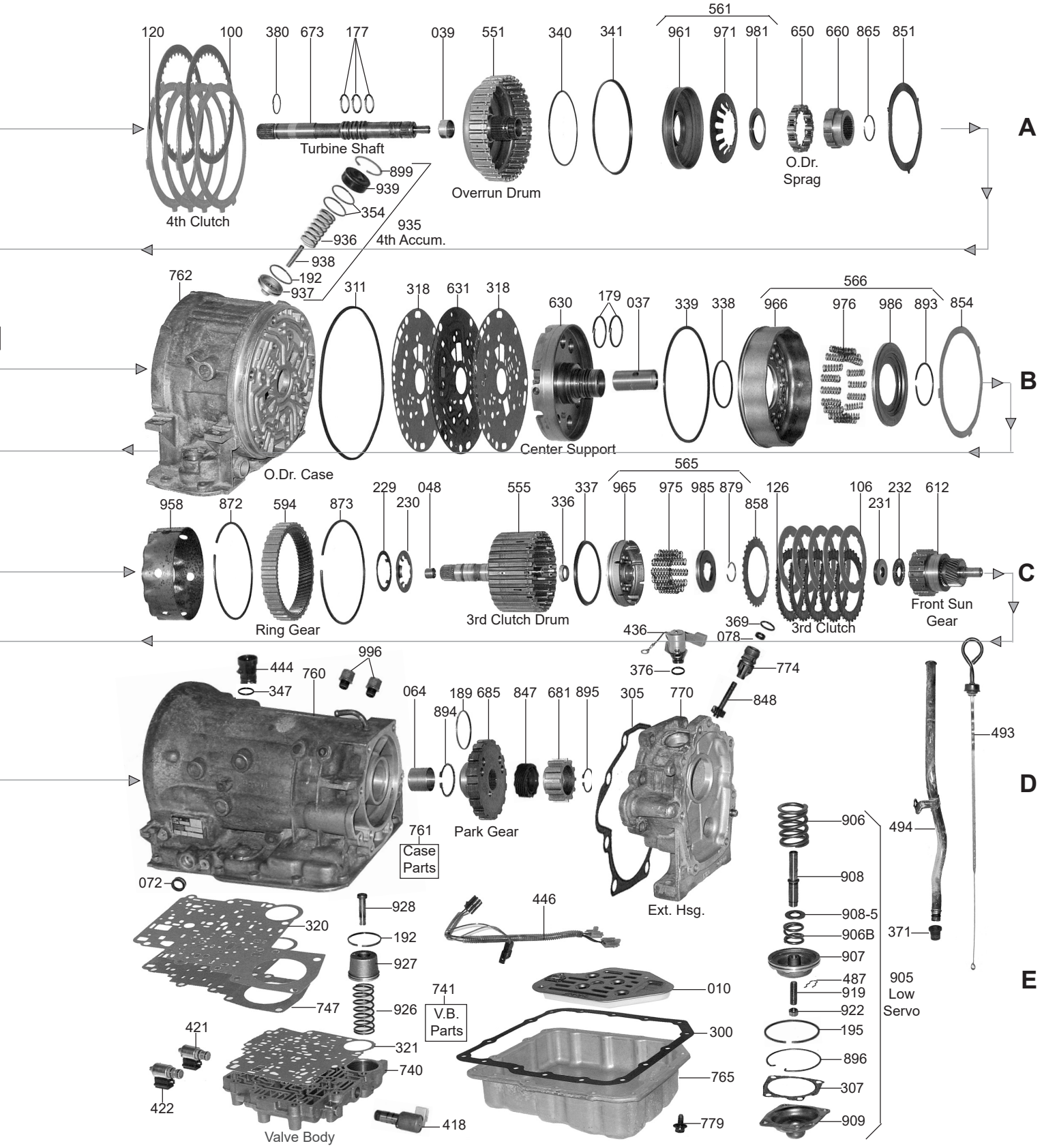

© Whatever It Takes Transmission Parts. Inc.

PART #	PAPER & RUBBER KIT	QTY.	REFERENCE #
24000	Paper & Rubber Kit, 180/180C Combo 1969-Up	1	
24000A	Paper & Rubber Kit, 180C (Post Office & Luv) 1987-Up	1	
24000EF	Paper & Rubber Kit, 4L30E 1989-Up (Farpak)	1	

PART #	OVERHAUL KIT	QTY.	REFERENCE #
24002	Overhaul Kit, 180/180C Combo 1969-Up	1	
24002A	Overhaul Kit, 180C (Post Office, Luv & Tracker) 1987-Up (For Tracker 2WD You Must Sell 24074A & For 4x4 Sell 67076A Also)	1	
24002B	Overhaul Kit, 180C (3L30) (Holden Only) 1969-87	1	
24002EF	Overhaul Kit, 4L30E 1989-Up (Farpak)(For BMW Sell 69074 Also)(With The Overrun Bonded Piston)	1	

PART #	MASTER L/STEEL KIT	QTY.	REFERENCE #
24004	Master L/Steel Kit, 180/180C Combo 1969-Up	1	
24004A	Master L/Steel Kit, 180C (Post Office, Luv & Tracker) 1987-Up (For Tracker 2WD You Must Sell 24074A & For 4x4 Sell 67076A Also)	1	
24004EF	Master L/Steel Kit, 4L30E 1989-97 (Farpak) (For BMW Sell 69074 Also) (With Overrun Clutch Bonded Piston)	1	
24004EAF	Master L/Steel Kit, 4L30E 1998-Up (Farpak) (With Overrun Clutch Bonded Piston)	1	

PART #	MASTER W/STEEL KIT	QTY.	REFERENCE #
24006	Master W/Steel Kit, 180/180C Combo 1969-Up	1	
24006A	Master W/Steel Kit, 180C (Post Office, Luv & Tracker) 1987-Up (For Tracker 2WD You Must Sell 24074A & For 4x4 Sell 67076A Also)	1	
24006EF	Master W/Steel Kit, 4L30E 1989-97 (Farpak)(For BMW Sell 69074 Also)(With Overrun Clutch Bonded Piston)	1	
24006EAF	Master W/Steel Kit, 4L30E 1998-Up (Farpak) (With Overrun Clutch Bonded Piston)	1	

PART #	FILTER	QTY.	REFERENCE #
24010	Filter, 180/180C 1969-Up	1	5258130
24010E	Filter, 4L30E (1/2” Tall Pick-Up)(Tan) 1989-Up	1	8-96041-011-0
24010EA	Filter, 4L30E (11/16” Tall Pick-Up) 1991-Up	1	

PART #	FILTER KIT	QTY.	REFERENCE #
24011	Filter Kit, 180/180C 1969-Up	1	
24011E	Filter Kit, 4L30E Isuzu 1989-Up (Clear Cover)	1	
24011EA	Filter Kit, 4L30E BMW 1991-Up (Black Cover)	1	
24011EB	Filter Kit, 4L30E Sidekick 1991-92	1	

PART #	MISC FILTERS	QTY.	REFERENCE #
24015	Filter, 4L30E PWM Solenoid Screen (3 3/4” Long)(In Valve Body) 1989-Up	1	94014437
54016B	Filter, 180/180C Governor (Tapered)	1	8627509
24018	Filter, 4L30E Force Motor Screen (In Auxillary Valve Body) 1989-Up	1	96014345

PART #	BANDS	QTY.	REFERENCE #
24026	Band, 180/180C/4L30E Low 1969-Up	1	5463805

PART #	BUSHINGS	QTY.	REFERENCE #
24030	Bushing Kit, 180/180C 1969-Up	1	
24030B	Bushing Kit, 4L30E 1989-Up (Contains: 9 Bushing)	1	
S24034	Bushing, 4L30E Converter Housing (Sonnax)	1	54253-01
24034	Bushing, 180/180C/4L30E Bell Housing (Pump Body)	1	
44034	Bushing, 180/180C Pump Body	1	
24034D	Bushing, 180/180C/4L30E Bell Housing (Pump Body)(Dry Film Lubricant)	1	
54036A	Bushing, 180/180C/4L30E Pump Stator (Front) 1969-Up	1	8628915
24037	Bushing, 180/180C Pump Stator (Rear) 1969-Up	1	8958621
24037B	Bushing, 4L30E Center Support 1989-Up	1	
54039B	Bushing, 4L30E Overrun Drum 1989-Up	2	8634908
24042	Use 64044	1	8631905
64044	Bushing, 4L30E Overdrive Planet #042	1	

© Whatever It Takes Transmission Parts. Inc.

24046	Bushing, 180/180C/4L30E 2nd Clutch Drum 1969-Up	1	5258128
24046	Bushing, 4L30E 2nd Clutch Drum 1989-Up	1	
54048B	Bushing, 4L30E 3rd Clutch Drum Shaft (Pilot) 1989-Up	1	8634925
24050	Bushing, 180/180C Rear Band Drum (Also Fits 4L30E Input Sungear/Rear Band Drum)	1	5258075
24064	Bushing, 180/180C/4L30E Case 1969-Up	1	5258191
24064B	Bushing, 180/180C/4L30E Case (No Walk) 1969-Up	1	
24064S	Bushing/Sleeve, 180/180C Governor Bore (Chrome-Moly) 1969-Up	1	
24066	Bushing, 4L30E Extention Housing (Plain) 1989-Up	1	
24066A	Bushing, 180/180C/4L30E Extension Housing (Tracker Only) 1989-98	1	
44066B	Bushing, 180/180C/4L30E Extension Housing (Bronze)1969-Up	1	6260048
24066C	Bushing, 4L30E Extention Housing (Coated) 1989-Up	1	

PART #	METAL CLAD SEALS	QTY.	REFERENCE #
44070	Seal, 180/180C Front (Converter Housing) 1969-Up	1	8626916
24070A	Seal, 4L30E Front (Converter Housing) 1989-Up	1	8-96015-187-0
44072	Seal, 180/180C Linkage Shaft 1969-Up	1	8623056
84072A	Seal, 4L30E Linkage Shaft 1989-Up	1	8644709
24074	Seal, 180 Rear (Fiat)	1	
24074A	Seal, 180/180C/4L30E Rear (Sidekick, Tracker 2wd) 1990-Up	1	96040762
44074	Seal, 180/180C/4L30E Rear 1969-Up	1	1243402
44074C	Seal, 180/180C/4L30E Rear (With Flange) With Short Boot	1	
69074	Seal, 4L30E (BMW) Extension Housing Seal (2.292"OD) 1989-02	1	
67076A	Seal, 180/180C/4L30E Rear (2.145"OD) (Sidekick, Tracker 4x4)	1	96054039
44078X	Seal, 180/180C Speed-O Shaft 1969-Up	1	1240382

PART #	FRICTION CLUTCH	QTY.	REFERENCE #
24100	Friction, 4L30E 4th Clutch .086" 1989-Up	3	8-96014-459-0
24104	Friction, 180/180C/4L30E 2nd Clutch .097" 1969-Up	3-5	96013664
24106	Friction, 180/180C/4L30E 3rd Clutch .100" 1969-Up	2-5	90064281
24106A	Friction, 4L30E 3rd Clutch .063" 1998-Up	2-6	
24110	Friction, 180/180C/4L30E Reverse Clutch .095" 1969-Up	2-5	96013665
24116	Friction, 4L30E Overrun Clutch .086" 1989-Up	2	8-96014-195-0
24119	Friction Module, 180/180C 1969-Up	1	
24119E	Friction Module, 4L30E 1989-97	1	
24119EB	Friction Module, 4L30E 1998-Up	1	

PART #	STEEL CLUTCH	QTY.	REFERENCE #
24120	Steel, 4L30E 4th Clutch .080" 1989-Up	4	8-96014-187-0
24124	Steel, 180/180C/4L30E 2nd Clutch .083" 1969-Up	3-6	96040118
24124A	Steel, 180/180C/4L30E 2nd Clutch .070" 1969-Up	3-6	5258057
24126	Steel, 180/180C/4L30E 3rd Clutch .083" 1969-Up	3-6	5258955
24126A	Steel, 180/180C/4L30E 3rd Clutch .070" 1969-Up	3-6	5258086
24130	Steel, 180 Reverse Clutch .070" 1969-Up	3-6	5258019
24130A	Steel, 180/180C/4L30E Reverse Clutch .083" 1969-Up	3-6	96040135
24136	Steel, 4L30E Overrun Clutch .082" 1989-Up	2	8-9604-194-0
24139	Steel Module, 180/180C 1969-Up	1	
24139E	Steel Module, 4L30E 1989-Up	1	

PART #	CLUTCH PRESSURE PLATES	QTY.	REFERENCE #
24140	Spacer Plate, 4L30E 4th Clutch (Aluminum) 1989-Up	1	
24150	Spacer Plate, 180/180C Reverse Clutch (3/4" Thick)(Aluminum) 1969-Up	1	8958733
24150E	Spacer Plate, 4L30E Reverse Clutch (1 3/16" Thick)(Aluminum) 1989-Up	1	
24156	Pressure Plate, 4L40E Overrun Clutch .200" 1989-Up	1	

PART #	MODULATORS	QTY.	REFERENCE #
24160	Modulator, 180/180C (1 Green Stripe) (Non-Broached Style) (Non-Adjustable) 1969-Up	1	51-0302-02-00
24160B	Modulator, 180/180C (1 Blue Stripe) (Broached Style) (Non-Adjustable) 1969-Up	1	8958947
24160C	Modulator, 180/180C (2 Green Stripes) (Adjustable) 1969-Up	1	96013866
24160CA	Modulator, 180/180C (1 Green Stripe) (Non-Adjustable) (Post Office) (Can Use 24160)	1	51-0302-06-00
24160E	Modulator, 180/180C (2 Blue Stripes) (Cheverolet Round Hole)(Adjustable) 1969-Up	1	96013028
24160G	Modulator, 180/180C (1 Purple Stripe) (Suzuki, GEO Tracker) (Adjustable) 1989-Up	1	96040434
44162	Hose, 180/180C Modulator (Elbow) 1969-Up	1	C1AZ-7B087-E
24163	Valve, 180/180C Under Modulator 1969-Up	1	96040265
24163-1	Sleeve, 180/180C (Aluminum, For Valve Under Modulator) 1969-Up	1	5258921
24164	Pin, 180/180C Modulator 1969-Up	1	5258244

© Whatever It Takes Transmission Parts. Inc.

PART #	VALVE BODY KITS	QTY.	REFERENCE #
T24165	Valve Body Kit, 180C (Post Office, Luv) 1982-Up (Transgo)	1	SK-180-C
A24165E	Valve Body Kit, 4L30E (Translab)	1	TL-4L30
S24165E	Valve Body Kit, 4L30E (Superior)	1	
T24165EA	Shift Kit, 4L30E (Contains: Center Support Bushing, Driver, Turbine Shaft Ball & Capsule, TCC Spring In Stator, Pump Alignment Tool, Drill Bit For Valve Body) 1991-04 (Transgo)	1	

PART #	OIL SEALING RINGS	QTY.	REFERENCE #
24175	Ring Kit, 180/180C 1969-Up	1	
24175B	Ring Kit, 180/180C (For Holden Only)	1	
24175E	Ring Kit, 4L30E 1989-Up	1	
54177AT	Ring, 4L30E Turbine Shaft (Scarf Cut)(Teflon) 1989-Up	3	8628090
54177BT	Ring, 4L30E Turbine Shaft (Solid) (Teflon) 1989-Up	3	
24179	Ring, 180/180C Stator 1969-Up (4L30E Center Support 1989-Up)	2-4	5258106
24189	Ring, 180/180C/4L30E Governor Hub 1969-Up	3	5258837
24189B	Ring, 180C Governor Hub (For Holden Only)	3	
34192	Ring, 180/180C/4L30E Accumulator Piston 1969-Up	1	8623653
24195	Ring, 180/180C/4L30E Low Servo Piston 1969-Up	1	5258159

PART #	WASHERS & BEARINGS	QTY.	REFERENCE #
24200	Washer Kit, 180/180C 1969-86	1	
24200B	Washer Kit, 180/180C/4L30E 1987-Up	1	
24211AB	Washer, 180/180C/4L30E Pump/Center Support .070" (No Tab) 1969-Up	1	5258202
24211AC	Washer, 180/180C/4L30E Pump/Center Support .078" (No Tab) 1969-Up	1	5258203
24211AD	Washer, 180/180C/4L30E Pump/Center Support .083" (No Tab) 1969-Up	1	5258204
24211AE	Washer, 180/180C/4L30E Pump/Center Support .088" (No Tab) 1969-Up	1	5258205
24211AG	Washer, 180/180C/4L30E Pump/Center Support .094" (No Tab) 1969-Up	1	5258206
24211AH	Washer, 180/180C/4L30E Pump/Center Support .100" (No Tab) 1969-Up	1	5258207
24211AK	Washer Kit, 180/180C/4L30E Pump/Center Support (6 Selectives)(No Tab) 1969-Up	1	
24211B	Washer, 180C/4L30E Pump/Center Support .059" (3 Tab) 1987-Up	1	94040561
24211BA	Washer, 180C/4L30E Pump/Center Support .067" (3 Tab) 1987-Up	1	94040562
24211BB	Washer, 180C/4L30E Pump/Center Support .075" (3 Tab) 1987-Up	1	94040563
24211BC	Washer, 180C/4L30E Pump/Center Support .082" (3 Tab) 1987-Up	1	94040564
24211BD	Washer, 180C/4L30E Pump/Center Support .090" (3 Tab) 1987-Up	1	94040565
24211BE	Washer, 180C/4L30E Pump/Center Support .098" (3 Tab) 1987-Up	1	94040566
S24211BBK	Washer & Shim Kit, 180C/4L30E Pump/Center Support (With 2- .075" 3 Tab Washers, 4- .010" Shims & 2- .030" Shims) (Sonnax)	1	54701-03K
54217B	Bearing W/Race, 4L30E Overdrive Planet to Overdrive Ring Gear 1989-Up	1	8634035
54223B	Washer, 4L30E Overdrive Ring Gear to Overdrive Case 1989-Up	1	8-96014-390-0
24229	Washer, 180/180C/4L30E 2nd Drum to 3rd Drum (Front)(5 Tab Metal) 1969-Up	1	5258945
24229A	Washer, 180/180C/4L30E 2nd Drum to 3rd Drum (Front)(Plastic) 1969-Up	1	96040241
24230	Washer, 180/180C/4L30E 2nd Drum to 3rd Drum (Rear) 1969-Up	1	5258945
24231	Race, 180/180C/4L30E 3rd Drum to Sun Gear (Front) 1969-Up	1	
24232	Bearing, 180/180C/4L30E 3rd Drum to Sun Gear (Rear) 1969-Up	1	96040078
24233	Race, 4L30E 3rd Drum to Sun Gear (Rear)(.076") 1989-Up	1	
24241	Bearing, 180/180C Sun Gear to Planet (.520"ID) 1969-Up	1	
24241E	Bearing, 4L30E Sun Gear to Planet (.715"ID) 1989-Up	1	8-96014-602-0
24242	Race, 180/180C Sun Gear to Planet (.520"ID) 1969-Up	1	5258555
24242E	Race, 4L30E Sun Gear to Planet (.725"ID) 1989-Up	1	
24250	Race, 180/180C Sun Gear to Low Drum & Low Drum to Case 1969-Up	2	
24251	Bearing, 180/180C Sun Gear to Low Drum & Low Drum to Case 1969-Up	2	5686837
24251E	Bearing, 4L30E Planet to Low Drum (Stays in Planet) 1989-Up	1	
24254E	Caged Bearing, 4L30E (Stays in Output Shaft) 1989-Up	1	
24257	Bearing W/Race, 4L30E Low Drum to Case 1989-Up	1	8-96014-084-0

PART #	GASKETS & RUBBER COMPONENTS	QTY.	REFERENCE #
24300	Gasket, 180/180C Bottom Pan 1969-Up	1	14050668
24300A	Gasket, 4L30E (GM & Holden) Bottom Pan 1989-Up	1	8-9014-234-0
24300B	Gasket, 4L30E (BMW) Bottom Pan 1990-Up	1	98091
24301A	Gasket, 4L30E Front Overdrive Pan 1989-Up	1	8-9014-235-0
24305	Gasket, 180/180C/4L30E Extension Housing 1969-Up	1	96040534
24305E	Gasket, 4L30E Extension Housing 1989-Up	1	
24307	Gasket, 180/180C Servo Cover 1969-Up	1	
44309	Gasket, 180/180C Pump Bolt Washer 1969-Up	12	3884683
24310	Gasket, 180/180C Pump 1969-Up	1	5258939
24310E	Gasket, 4L30E Pump 1989-Up	1	
24311	O-Ring, 180/180C/4L30E Pump OD Housing To Case 1969-Up	1-2	5258119

© Whatever It Takes Transmission Parts. Inc.

24318B	Gasket, 4L30E Center Support To Plate 1989-91 (Takes 2)	2	
24318BA	Gasket, 4L30E Center Support To Plate 1992-Up (Takes 2)	2	96016514
24320	Gasket, 180/180C Valve Body(Upper)(Exc 1987-Up P.O., Luv, Tracker & Sidekick) 1969-Up	1	96040729
24320A	Gasket, 180/180C Valve Body(Upper)(Post Office, Luv, Tracker & Sidekick) 1987-Up	1	
24320B	Gasket, 4L30E Valve Body (Upper) 1989-11/93	1	
24320BA	Gasket, 4L30E Valve Body (Upper) 12/93-Up	1	
24321	Gasket, 180/180C Valve Body(Lower)(Exc 1987-Up P.O., Luv, Tracker & Sidekick) 1969-Up	1	5258443
24321A	Gasket, 180/180C Valve Body(Lower)(Post Office, Luv, Tracker & Sidekick) 1987-Up	1	
24321B	Gasket, 4L30E Valve Body (Lower) 1989-Up	1	
24326	Gasket, 180/180C Filter 1969-Up	1	5258245
24327	Gasket, 180/180C Modulator 1969-Up	1	
24336	Lip Seal, 180/180C/4L30E 3rd Clutch (Inner)	1	
24354	O-Ring, 4L30E 4th Accumulator Cover (For Aluminum Cover)	2	
103368	O-Ring, 180/180C Speed-O Sleeve 1969-Up	1	10054241
44371A	O-Ring, 180/180C Filler Tube 1969-Up	1	6264902
44371B	Boot, 180/180C/4L30E Filler Tube 1969-Up	1	
24372	O-Ring, 180/180C Detent Cable 1969-Up	1	5258404
64380	O-Ring, 180C/4L30E Turbine Shaft (Goes Behind Splines) 1982-Up	1	

PART #	TECHNICAL MANUALS	QTY.	REFERENCE #
24400E	Tech Manual, 4L30E 1989-Up		4L30-E

PART #	ELECTRICAL COMPONENTS	QTY.	REFERENCE #
24410EA	Neutral Safety Switch, 4L30E (10 Blade Connector)(17 1/2” Long Wire Harness) 1989-Up	1	
24411	Switch, 180/180C 2nd Clutch Pressure 1969-Up	1	
44416A	Switch, 180/180C Governor Pressure 40 PSI 1969-Up	1	8648062
44416B	Switch, 180/180C Governor Pressure 46 PSI 1969-Up	1	8648063
44416C	Switch, 180/180C Governor Pressure 48 PSI 1969-Up	1	8648064
44416D	Switch, 180/180C Governor Pressure 50 PSI 1969-Up	1	8648065
44416DA	Switch, 180/180C Governor Pressure 52 PSI 1969-Up	1	8648066
44416E	Switch, 180/180C Governor Pressure 54 PSI 1969-Up	1	8648067
24418	Solenoid, 4L30E PWM (Band Control) 1989-Up	1	52-0248
34418	Solenoid, 4L30E TCC 2000-Up	1	
24421E	Solenoid, 4L30E 1-2 & 3-4 Shift 1989-Up	1	4394722
24422E	Solenoid, 4L30E 2-3 Shift 1989-Up	1	4394243
24425	Solenoid, 180C TCC Lock-Up 1980-81	1	
24425B	Solenoid, 180C TCC Lock-Up 1982-Up	1	52-0233
24425E	Solenoid, 4L30E TCC Lock-Up 1989-00 (With 2 Prong Connector)	1	4394177
24425F	Solenoid, 4L30E TCC Lock-Up 2000-Up (With 2 Prong Oval Connector)(Can Use 34418)	1	8-96042-666-0
34435A	Solenoid, 4L30E Pressure Control (Force Motor) 1989-97 (Has 2 Flat Blades On End Of Solenoid)	1	24220158
24435EA	Solenoid, 4L30E Pressure Control (Force Motor) 1997-Up (Has 2 Flat Blades On End)(1.396”OD) (This Is The Bosch)	1	8677314
24436	Sensor, 4L30E Output Speed (Except BMW) 1989-Up	1	8-96014-442-0
44442A	Universal Adjustment Vaccum Switch, 180C (1” To 6” Of Vaccum) (Superior)	1	
44442B	Universal Adjustment Vaccum Switch, 180C (6” To 22” Of Vaccum) (Superior)	1	
64444A	Connector, 4L30E Case (Round 5 Wire) 1989-Up	1	8665015
74444A	Connector, 180C Case (3 Prong)	1	8634383
84444	Connector, 180C Case (4 Prong) Square	1	
84444C	Connector, 4L30E Case (7 Prong)	1	8651620
24445E	Wire Harness, 4L30E External (Round 5 Wire) 1989-Up	1	
84445K	Repair Kit, 4L30E External Wire Harness (Round 5 Wire Type) 1989-Up	1	
24446	Wire Harness, 4L30E Internal (4 Wire Connector That Plugs Into The Case Connector With 3 Two Wire Connectors) 1989-Up	1	
24446A	Wire Harness, 4L30E Internal (4 Wire Connector That Plugs Into The Case Connector With 2 Two Wire Connectors) 1989-Up	1	
24446AA	Wire Harness, 4L30E Internal (4 Wire Connector That Plugs Into The Case Connector With 2 Two Wire & 1 One Wire & 1 Ground Connector) 1989-Up	1	
24446B	Wire Harness, 4L30E Internal (6 Wire Round Connector That Plugs Into The Case Connector With 3 Two Wire Connectors) 1989-Up	1	
24446D	Wire Harness, 4L30E Internal (9 Pin Round Case Connector Made To The Wire Harness With 4 Two Wire And 2 One Wire Connectors)	1	

© Whatever It Takes Transmission Parts. Inc.

PART #	ELECTRICAL COMPONENTS	QTY.	REFERENCE #
24447	Wire Harness, 4L30E Internal Auxillary (5 Prong Round Connector That Plugs Into The Auxillary Case Connector With 2 One Wire, 1 Two Wire Connectors And 1 Blade Ground Connector) 1989-Up	1	
24447A	Wire Harness, 4L30E Internal Auxillary (4 Wire Square Connector That Plugs Into The Auxillary Case Connector With 2 One Wire And 1 Two Wire Connector With Side Locking Tabs) 1989-Up	1	
24447AA	Wire Harness, 4L40E Internal Auxillary (4 Wire Square Connector That Plugs Into The Auxillary Case Connector With 2 One Wire, 1 Two Wire Blue Connector Without Side Locking Tabs) 1989-Up	1	
24447C	Wire Harness, 4L30E Internal Auxillary (2 Wire Square Connector That Plugs Into The Auxillary Case Connector With 5 One Blade Connectors) 1989-Up	1	
24447EC	Interceptor, 4L30E 1989-Up	1	
34447	Recalibrator, 4L30E (Electronic Speedometer)	1	RECAL-GM
24449	E-Place, 4L30E Electronic Controller Kit (ATG)	1	EP54-A

PART #	MISC. COMPONENTS	QTY.	REFERENCE #
M465F	Union, 5/16”	1	
44487	E-Clip, GM	1	9431762
44490	Vent, GM Case (Plastic)	1	
T44494R	Filler Tube & Dip Stick, GM (Fitz All, Teckpak)	1	

PART #	HARD PARTS	QTY.	REFERENCE #
24520	Stator W/Gears, 180 Opel W/Valve 1969-Up	1	90064214
24520A	Stator W/Gears, 180 Chevy W/Out Valve 1969-80	1	
24520B	Stator W/Gears, 180 Non Lock-Up 1981	1	
24520C	Stator W/Gears, 180C Lock-Up (Uses A No Tab Washer # 211) 1982-86	1	96040245
24520CA	Stator W/Gears, 180C Lock-Up (Uses A 3 Tab Washer # 211) 1987-Up	1	
24520CB	Stator W/Gears, 180C Lock-Up (Uses A 3 Tab Washer) 1987-Up (Has A Stepped Hole For A Tube & Capsule With Checkball In The Gasket Surface Area)	1	
24520E	Stator W/Gears, 4L30E (2 Valve Type)(Less Valves) 1989-99 (Cast # 96016689)(Pressure Regulator Valve Is .515”OD)	1	8-96041-018-0
24520EA	Stator W/Gears, 4L30E (4 Vlave Type)(Less Valves)(PWM) 2000-Up (Can Use 24520EK With BU40 Converter)	1	
24520EB	Stator W/Gears, 4L30E (2 Valve Type)(Less Valves) 1989-99 (Cast # 96014994)(Pressure Regulator Valve Is .595”OD)	1	
24520EK	Pump Conversion Kit, 4L30E (For Axiom & Trooper 2000-04) (Contains: 24750EB, 24520E, 24544E & 24673A)(Must Use BU40 Converter)	1	

PART #	PUMP COMPONENTS	QTY.	REFERENCE #
S24507C-2	Sleeve, 4L30E TCC Regulator Valve Sleeve (Sonnax)(For PWM Only, Does Not Require Machining)	1	
S24507PK	Valve & Sleeve Kit, 4L30E Pressure Regulator Boost (Large Ratio) (Sonnax)	1	54200-06K
S24507PAK	Valve & Sleeve Kit, 4L30E Pressure Regulator Boost (Small Ratio) (Sonnax)	1	54200-12K
S24507PAAK	Valve & Sleeve Kit, 4L30E Pressure Regulator Boost (Small/Medium Ratio)(Sonnax)	1	
S24507PBK	Valve & Sleeve Kit, 4L30E Pressure Regulator Boost (Medium Ratio) (Sonnax)	1	54200-01K
24530A	Pump Gears, 180/180C/4L30E .628” Thick 1969-Up	1	
24530AX	Pump Gear Set, 180/180C/4L30E (Oversized) 1969-Up	1	

PART #	HARD PARTS (Continued)	QTY.	REFERENCE #
24544	Plate, 180 Pump 1969-80	1	5258850
24544B	Plate, 180 Pump Non Lock/Up 1981	1	
24544C	Plate, 180C Pump Lock-Up (056 Ink Letters) 1982-Up	1	96013212
24544CA	Plate, 180C Pump Lock-Up (272 Ink Letters) 1982-Up	1	
24544E	Plate, 4L30E Pump (069 Ink Letters) 1989-Up	1	8-96015-519-0
24544EA	Plate, 4L30E Pump (506 Ink Letters) 1989-Up	1	
24544EAA	Plate, 4L30E Pump (507 Ink Letters) 1989-Up	1	
24544EB	Plate, 4L30E Pump (519 Ink Letters) 1989-Up	1	
24544EC	Plate, 4L30E Pump (521 Ink Letters) 1989-Up	1	
24544ED	Plate, 4L30E Pump (548 Ink Letters) 1989-Up	1	
24544EE	Plate, 4L30E Pump (492 Ink Letters) 1989-Up	1	
24544EH	Plate, 4L30E Pump (630 Ink Letters) 1989-Up	1	
24544EL	Plate, 4L30E Pump (926 Ink Letters) 1989-Up	1	
24544ELA	Plate, 4L30E Pump (923 Ink Letters) 1989-Up	1	
24544EN	Plate, 4L30E Pump (995 Ink Letters) 1989-Up	1	
24551	Drum, 4L30E Overrun Clutch (2 Clutch) 1989-Up	1	8-96015-290-0

© Whatever It Takes Transmission Parts. Inc.

24552	Drum, 180 2nd Clutch 1969-78	1	5258129
24552A	Drum, 180/180C 2nd Clutch (.100” From Snap Ring #874 To Surface Where Washer #229 Rides) 1979-Up (Can Use 24552EK)	1	
24552E	Drum, 4L30E 2nd Clutch (.160” From Snap Ring #874 To Surface Where Washer #229 Rides) 1989-Up	1	
245552EK	Drum Kit, 4L30E 2nd Clutch (With Piston Kit) 1989-Up (This Will Retro Fit 24552A)	1	
24555	Drum W/Shaft, 180 3rd Clutch (Shaft Has A Pilot) 1969-80	1	8958686
24555A	Drum W/Shaft, 180C 3rd Clutch (Lock-Up) 1981-Up	1	
24555AA	Drum W/Shaft, 180 3rd Clutch (Non-Lock-Up) 1981(No Ck Ball in Shaft)	1	
24555E	Drum W/Shaft, 4L30E 3rd Clutch (W/3 1/2” Long Shaft) 1989-Up	1	8-96041-002-0
24557	Drum, 180/180C Low Band W/Sun Gear Assembly (35 Teeth) 1969-Up	1	8958865
24557B	Drum, 180/180C/4L30E Low Band W/Sun Gear Assembly (42 Teeth) 1969-Up	1	
24557E	Drum, 4L30E Low Band (Less Rear Sun Gear But Uses A 42 Teeth Sun Gear # 614) 1989-Up	1	8-96014-581-0
24557EA	Drum, 4L30E Low Band With Sun Gear Assembly (46 Teeth) 1989-Up	1	
24560	Piston Kit, 4L30E 4th Clutch 1989-Up	1	
24561	Piston Kit, 4L30E Overrun Clutch 1989-Up	1	
24562	Piston Kit, 180/180C/4L30E 2nd Clutch (1.450” Overall Thickness) 1969-Up	1	
24562A	Piston Kit, 180/180C/4L30E 2nd Clutch (1.250” Overall Thickness) 1969-Up	1	
24565	Piston Kit, 180/180C 3rd Clutch (15/16” Thick) 1969-Up	1	
24565E	Piston Kit, 4L30E 3rd Clutch (9/16” Thick) 1989-Up	1	
24566	Piston Kit, 180/180C Reverse Clutch (1 1/2” Thick) 1969-Up	1	
24566A	Piston Kit, 180/180C Reverse Clutch (1 5/8” Thick) 1969-Up	1	
24566E	Piston Kit, 4L30E Reverse Clutch (1 5/16” Thick) 1989-Up	1	
24580	Planet, 4L30E Overdrive (31 Teeth Sun Gear # 610) 1989-Up	1	8-96014-376-0
24584	Planet, 180/180C W/13 3/4” Output Shaft (3 Gear)(25 Teeth Sun Gear # 612) 1969-Up	1	715007
24584K	Planet Kit, 180/180C W/13 3/4” Output Shaft (3 Gear)(25 Teeth Sun Gear # 612) 1969-Up (Contains; # 584,612,614, & 594)	1	
24584A	Planet, 180/180C W/13 3/4” Output Shaft (4 Gear)(25 Teeth Sun Gear # 612) 1969-Up	1	
24584AA	Planet, 180/180C W/12” Output Shaft (3 Gear)(30 Teeth Sun Gear # 612) 1969-Up	1	
24584AB	Planet, 180/180C W/13 3/4” Output Shaft (3 Gear)(30 Teeth Sun Gear # 612) 1969-Up	1	
24584AG	Planet, 180C W/8” Output Shaft (3 Gear)(30 Teeth Sun Gear # 612)(Geo Tracker 4x4)	1	
24584AT	Planet, 180/180C W/8 1/2” Output Shaft (3 Gear)(30 Teeth Sun Gear # 612) 1969-UP	1	
24584B	Planet, 180 W/Output Shaft (Fiat)	1	
24584C	Planet, 180 W/Output Shaft (Peugeot)	1	
24584DA	Planet, 4L30E With 10 1/8” Long Output Shaft (4 Gear)(46 Teeth Sun Gear # 614)(No Pilot On Rear Of Shaft)(Without Splines For Reluctor) 1989-Up	1	
24584DB	Planet, 4L30E With 10 1/8” Long Output Shaft (4 Gear)(46 Teeth Sun Gear # 614)(No Pilot On Rear Of Shaft)(With Splines For Reluctor) 1989-Up	1	
24584E	Planet, 4L30E W/8” Output Shaft 4X4 (4 Gear)(46 Teeth Sun Gear # 614) 1989-Up	1	8-94450-758-0
24584EK	Planet Kit, 4L30E W/8” Output Shaft 4X4 (4 Gear)(46 Teeth Sun Gear # 614) 1989-Up (Contains; # 584,612,614, & 594)	1	
24584EA	Planet, 4L30E W/8 3/8” Output Shaft 4X4 (4 Gear)(42 Teeth Sun Gear # 614) 1989-Up	1	
24584G	Planet, 4L30E W/11 1/2” Output Shaft (4 Gear)(42 Teeth Sun Gear # 614) 1989-Up (With .550”OD Pilot On Raer Of Shaft)(Bolt On Yoke)	1	
24584GA	Planet, 4L30E W/11 1/2” Output Shaft (4 Gear)(46 Teeth Sun Gear # 614) 1989-Up (.550”OD Pilot On Rear Of Shaft)(Bolt On Yoke)	1	
24584GB	Planet, 4L30E W/11 1/2” Long Output Shaft (4 Gear)(46 Teeth Sun Gear # 614)(.630”OD Pilot On Rear Of Shaft)(Bolt On Yoke)(Without Splines For Reluctor) 1989-Up	1	
24584GC	Planet, 4L30E With 11 1/2” Long Output Shaft (4 GEAr)(46 Teeth Sun Gear # 614)(.630”OD Pilot On Rear Of Shaft)(Bolt On Yoke)(With Splines For Reluctor) 1989-Up	1	
24590	Ring Gear, 4L30E Overdrive Planet (31 Teeth Sun Gear # 610) 1989-Up	1	8-96014-202-0
24594	Ring Gear, 180/180C Planet (73 Teeth)(25 Teeth Sun Gear # 612) 1969-Up	1	8958696
24594E	Ring Gear, 180C/4L30E Rear Planet (90 Teeth)(30 Teeth Sun Gear # 612) 1989-Up	1	8-96014-576-0
24610	Sun Gear, 4L30E Overdrive Planet (31 Teeth) 1989-Up	1	8-96014-199-0
24612	Sun Gear, 180/180C W/Inner Race (25 Teeth) 1969-86	1	8958866
24612E	Sun Gear, 4L30E W/Inner Race (30 Teeth) W/Pilot 1989-Up	1	8-96014-073-0
24612EA	Sun Gear, 180C W/Inner Race (30 Teeth) No Pilot 1987-Up	1	
24614E	Sun Gear, 4L30E Rear (46 Teeth, W/Out Low Drum) 1989-Up	1	8-96016-037-0
24614EA	Sun Gear, 4L30E Rear (42 Teeth, W/Out Low Drum) 1989-Up	1	
24630	Center Support, 4L30E (Cast # 069 DD2)(W/1 Valve)(Uses a No Tab Washer # 211)	1	8-96041-121-0
24630A	Center Support, 4L30E (Cast # 069 DD1)(W/2 Valves)(Uses a 3 Tab Washer # 211)	1	
24630AA	Center Support, 4L30E (Cast # 069)(W/1 Valve)(Uses a 3 Tab Washer # 211)	1	
24630B	Center Support, 4L30E (Cast # 513 FU)(W/2 Valves)(Uses a No Tab Washer # 211)	1	
24630BA	Center Support, 4L30E (Cast # 513 FU)(W/1 Valve)(Uses a No Tab Washer # 211)	1	
24630BC	Center Support, 4L30E (Cast # 513 FU)(W/1 Valve)(Uses a 3 Tab Washer # 211)	1	
24630BD	Center Support, 4L30E (Cast # 513)(W/2 Valves)(Uses a 3 Tab Washer # 211)	1	
24631	Plate, 4L30E Overdrive Case to Center Support 1989-Up	1	8-96041-091-0

© Whatever It Takes Transmission Parts. Inc.

PART #	SPRAGS & ROLLER CLUTCHES	QTY.	REFERENCE #
54650B	Sprag, 4L30E Overdrive 1989-Up	1	8634049
24654	Sprag, 180 3rd Clutch (16 Elements) 1969-Up	1	5258546
24654A	Sprag, 180/180C/4L30E 3rd Clutch (26 Elements)(Use 74658) 1969-Up	1	
74658	Sprag, 180/180C/4L30E 3rd Clutch (26 Elements) 1969-Up	1	10121024

PART #	HARD PARTS (Continued)	QTY.	REFERENCE #
24660	Inner Race, 4L30E Overdrive Sprag 1989-Up	1	8-08634-038-0
24665	Outer Race, 180/180C 3rd Clutch Sprag (.505” Thick) 1969-Up	1	5258351
24665E	Outer Race, 4L30E 3rd Clutch Sprag (.555” Thick) 1989-Up	1	
24665EA	Outer Race, 4L30E 3rd Clutch Sprag (.530” Thick) 1989-Up	1	
24673	Turbine Shaft, 4L30E (10 1/8” Long) (Without Check Valve) 2000-Up	1	8-96014-366-0
24673A	Turbine Shaft, 4L30E (10 1/8” Long) (With Check Valve) 1989-99	1	
24680	Governor, 180/180C 2 Bolt Type 1969-Up	1	
24680A	Governor, 180/180C 4 Bolt Type 1969-Up	1	8-96013-408-0
24681E	Electric Pick-Up, 4L30E (12 Lug) 1989-Up	1	8-96015-053-0
24681EA	Electric Pick-Up, 4L30E (12 Lug) With Hub & 2 Slots In Hub	1	
24685	Support, 180/180C Governor (W/Park Gear) 1969-Up	1	
24685E	Support, 4L30E Rear (1 Ring) 1989-Up	1	8-96015-410-0
24698E	Oil Baffle, 4L30E (Goes In The Overdrive Case Under The #631 Plate) (Plastic, Looks Like A Cork Screw)	1	
24740	Valve Body, 180 1969-80	1	
24740A	Valve Body, 180 Non Lock-Up (Chevy) 1981	1	
24740B	Valve Body, 180C Lock-Up 1982-Up	1	96040327
24740BA	Valve Body, 180C Lock-Up (W/out Plate)82-Up(Seperator Plate Bolts To The Transmission)	1	
24740E	Valve Body, 4L30E (W/3 Solenoids) 1989-Up	1	8-96015-467-0
24744	Auxillary Valve Body, 4L30E (Cast Iron) 1989-Up	1	
24744B	Auxillary Valve Body, 4L30E (Alum) 1989-Up	1	
24744C	Auxillary Valve Body, 4L30E (Aluminum)(Cast # 96023377) 1989-Up	1	
24750	Bell Housing, 180 (Chevette) 1969-80	1	
24750A	Bell Housing, 180/180C (Chevette) 1981-Up	1	96013240
24750B	Bell Housing, 180C (Isuzu, Trooper) 1981-Up	1	
24750C	Bell Housing, 4L30E (Top Bolts 4 7/8”)(Passenger Side Starter) 1989-Up	1	
24750E	Bell Housing, 4L30E (Top Bolts 5 1/8”)(Drivers Side Starter)(W/1 Threaded Boss Under Starter, With A 2” X 4 1/2” Window At The Bottom)	1	8-96016-611-0
24750EA	Bell Housing, 4L30E (Top Bolts 5 1/8”)(Drivers Side Starter)(W/1 Threaded Boss Under Starter & 1 Threaded Boss on Bottom Towards Center of Bell)	1	
24750EB	Bell Housing, 4L30E (Top Bolts 5 1/8”) Drivers Side Starter (With 1 Threaded Boss Under Starter)(With A 2” x 4 1/2” Window At The Bottom)(Cast # N.EX. On Pump Side)(Uses A Two Valve Pump)	1	
24750EC	Bell Housing, 4L30E (Top Bolts 5 1/8”) Drivers Side Starter (With 1 Threaded Boss Under Starter)(With A 2” x 4 1/2” Window At The Bottom)(Cast # N.EX. On Pump Side)(Uses A Four Valve Pump)	1	
24750G	Bell Housing, 4L30E (Top Bolts 4 7/16”)(Drivers Side Starter At 1:00)(BMW)(Cast # 96016284)	1	
24750GA	Bell Housing, 4L30E (Top Bolts 4 7/16”)(Drivers Side Starter At 1:00)(BMW)(Cast # 96017562)	1	
24760	Case, 180 (Opel & Chevette) 1969-80	1	
24760A	Case, 180 Non Lock-Up (Chevette) 1981	1	
24760B	Case, 180C Lock-Up (Chevette)1982-Up (Shift Lever Is On The Drivers Side)	1	96013451
24760BA	Case, 180C Lock-Up (Post Office Vehicle)	1	
24760BB	Case, 180C Lock-Up (Tracker/Rodeo)(Shift Lever Is On The Passengers Side)(With 3 Bolt Shield Around Governor Bore)	1	
24760D	Case, 4L30E (Case Connector Hole Is .870”ID On Drivers Side)(No Dipstick Hole) 1989-Up	1	
24760E	Case, 4L30E (Case Connector Hole Is .870”ID On Drivers Side)(With Dipstick Hole On Passengers Side) 1989-Up	1	8-96041-007-0
24760EA	Case, 4L30E (Case Connector Hole Is 1.040”ID On Passengers Side)	1	
24760EC	Case, 4L30E (Case Connector Hole Is 1.040”ID On Drivers Side) (Has No Dipstick Hole) (Linkage Is On Drivers Side)	1	
24760EF	Case, 4L30E (Case Connector Hole Is 1.060”ID On Drivers Side)(Has No Dipstick Hole) (Linkage Is On Drivers Side)	1	
T-Servo-Fix	Servo Pin Bore Reaming Fixture, 180/180C/4L30E (Sonnax)	1	
24762	Overdrive Case, 4L30E (Cast # 96014955) 1989-Up	1	8-96041-192-0
24762A	Overdrive Case, 4L30E (Cast # 96017506)(W/Hole For Electrical Connector) 1989-Up	1	
24762AA	Overdrive Case, 4L30E (Cast # 96017506)(No Electrical Connector Hole) 1989-Up	1	
24762B	Overdrive Case, 4L30E (BMW)(Uses A 3-4 Accumulator Cover That Has No O-Ring Grooves) (Has 2 O-Ring Grooves In The Accumulator Bore)(Cast # 95014955)	1	
24765	Pan, 180/180C Bottom 1969-up	1	
24765E	Pan, 4L30E Bottom (Rear)(No Drain Plug) 1989-Up	1	8-96016-562-0
24765EA	Pan, 4L30E Bottom (Rear)(W/2 Drain Plugs)(Isuzu)	1	

© Whatever It Takes Transmission Parts. Inc.

24765EB	Pan, 4L30E Bottom (Rear)(W/2 Drain Plugs)(BMW)	1	
24766	Pan, 4L30E Overdrive Case (Front) 1989-Up	1	8-96014-186-0
24770	Extension Housing, 180/180C (Chevette) 1969-Up	1	96013753
24770A	Extension Housing, 180C (9” Long)(Post Office Vehicle)	1	
24770AG	Extension Housing, 180C (7 3/8” Long)(1 Bolt Mount)(Tracker)	1	
24770D	Extension Housing, 4L30E 2WD (4 5/8” Long)(Bearing Type, W/Speed Sensor on Top)	1	
24770DA	Extension Housing, 4L30E 2WD (4 5/8” Long)(Bearing Type, W/Speed Sensor on Drivers Side)	1	
24770E	Extension Housing, 4L30E 4X4 (Isuzu)(Cast # 9601527G) 1989-Up	1	
24770EA	Extension Housing, 4L30E 4X4 (2 13/16” Thick)(Cast # 98015270) 1989-Up	1	
24770EB	Extension Housing, 4L30E 4X4 (2 1/2” Thick)(Cast # 96014096) 1989-Up	1	
44774	Speed-O Housing, 180/180C 7/8” Steel (For Metal Clad Seal) 1969-Up	1	25513247
44774A	Speed-O Housing, 180/180C 7/8” Aluminum (For Rubber Seal) 1970-Up	1	345215
34797B	Nut, 180/180C Holds External Shift Lever On (Metric) 1969-Up	1	
24842	Bracket, 180/180C Speed-O Gear Housing 1969-Up	1	
24847	Gear, 180/180C Speed-O Drive 1969-Up	1	90064073
24847EA	Gear, 4L30E Speed-O Drive (7 Teeth) Plastic (With 2 Ears) Drives Off Of The 24681EA	1	
24848	Gear, 180/180C Speed-O Driven 1969-Up	1	
24849	Clip, 180/180C Speed-O Gear 1969-Up	1	1373122
24851	Cushion, 4L30E Overrun Clutch 1989-Up	1	
24852	Cushion, 180/180C/4L30E 2nd Clutch 1969-Up	1	5258990
24854	Cushion, 180/180C/4L30E Reverse Clutch 1969-Up	1	5258989
24858	Cushion, 180/180C 3rd Clutch 1969-Up	1	8958678
24858E	Cushion, 4L30E 3rd Clutch 1989-Up	1	
24862	Snap Ring, 4L30E Holds 4th Clutch Retainer to Overdrive Case 1989-Up	1	8-08634-023-0
24863	Snap Ring, 4L30E Holds Overrun Pressure Plate in Drum 1989-Up	1	8-08634-056-0
24865	Snap Ring, 4L30E Holds Overdrive Sprag Inner Race To Overrun Drum 1989-Up	1	8-08634-274-0
24872	Snap Ring, 180/180C/4L30E Holds Apply Ring to 2nd Drum 1969-Up	1	8958619
24874	Snap Ring, 180/180C/4L30E Holds Retainer to 2nd Drum 1969-Up	1	5258093
24878	Snap Ring, 180/180C/4L30E Holds Outer Race to 3rd Drum 1969-Up	1	8958684
24879	Snap Ring, 180/180C/4L30E Holds Retainer to 3rd Drum 1969-Up	1	5258094
24880	Snap Ring, 4L30E Holds Overdrive Planet to Turbine Shaft 1989-Up	1	8-96014-389-0
44887	Snap Ring, 180/180C Holds Seal to Speed-O Housing 1969-Up	1	
24893	Snap Ring, 180/180C Holds Reverse Spring Retainer to Stator 1969-Up	1	5258093
24893E	Snap Ring, 4L30E Holds Reverse Spring Retainer to Overdrive Case 1989-Up	1	
24894	Snap Ring, 180/180C Holds Governor Support to Output Shaft 1969-Up	1	5258116
24894E	Snap Ring, 4L30E Holds Governor Support To Output Shaft 1989-Up	1	
24895	Snap Ring, 4L30E Holds Electric Pick-Up to Output Shaft 1989-Up	1	8-96015-123-0
24896	Snap Ring, 180/180C Holds Low Servo Piston In 1969-Up	1	
24896E	Snap Ring, 4L30E Holds Low Servo Piston In 1989-Up	1	
24899E	Snap Ring, 4L30E Holds 4th Accumulator In Overdrive Case 1989-Up	1	
24905	Servo Assembly, 180/180C Low Band 1969-up	1	96040116
24905E	Servo Assembly, 4L30E Low Band 1989-up	1	
24906	Spring, 180/180C Low Servo 1969-Up	1	
24906E	Spring, 4L30E Low Servo 1989-Up	1	
24907	Piston, 180/180C Low Servo 1969-Up	1	5258569
24907E	Piston, 4L30E Low Servo 1989-Up	1	8-08958-796-0
24909	Cover, 180/180C Low Servo 1969-Up	1	5258153
24909E	Cover, 4L30E Low Servo 1989-Up	1	8-96014-413-0
S24928-1K	Accumulator Pin Kit, 180/180C/4L30E 1-2 (Contains: 4 Oversized Pins & 8 E-Clips (Sonnax)(No Reamer)	1	
S24928K	Accumulator Pin Kit, 180/180C/4L30E 1-2 (Contains: 1 Reamer, 10 Oversized Pins & 20 E-Clips) (Sonnax)	1	
24935	Accumulator Assembly, 4L30E 3-4 (With Aluminum Cover With O-Ring Groove)	1	
24935A	Accumulator Assembly, 4L30E 3-4 (With Bonded Cover)	1	
24935B	Accumulator Asembly, 4L30E (BMW) 3-4 (With Aluminum Cover With No O-Ring Grooves)	1	
24939A	Cover, 4L30E 3-4 Accumulator (Bonded Rubber) 1994-Up	1	
24958	Apply Ring, 180/180C 2nd Clutch (2 1/8” Tall) 1969-Up	1	5258965
24958D	Apply Ring, 4L30E 2nd Clutch (1 3/8” Tall) 1989-Up	1	
24958E	Apply Ring, 4L30E 2nd Clutch (1 1/2” Tall) 1989-Up	1	8-08958-937-0
24958EA	Apply Ring, 4L30E 2nd Clutch (1 7/8” Tall) 1989-Up	1	
24960	Piston, 4L30E 4th Clutch 1989-Up	1	8-96014-928-0
24961	Piston, 4L30E Overrun Clutch (Bonded) 1989-Up	1	8-96014-577-0
24962	Piston, 180/180C 2nd Clutch (1.540” Overall Thickness)1969-Up	1	5258109
24962A	Piston, 180/180C/4L30E 2nd Clutch (1.250” Overall Thickness) 1969-Up	1	
24965	Piston, 180/180C 3rd Clutch 1969-Up	1	96040423
24966	Piston, 180/180C Reverse Clutch (1 1/2” Thick) 1969-Up	1	5258971
24966A	Piston, 180/180C Reverse Clutch (1 5/8” Thick) 1969-Up	1	
24966E	Piston, 4L30E Reverse Clutch (1 5/16” Thick) 1989-Up	1	96040355
24970	Retainer W/Spring, 4L30E 4th Clutch Return 1989-Up	1	8-08635-244-0

© Whatever It Takes Transmission Parts. Inc.

PART #	HARD PARTS (Continued)	QTY.	REFERENCE #
24971	Spring, 4L30E Overrun Clutch Return 1989-Up	1	8-96014-902-0
24972	Spring, 180/180C/4L30E 2nd Clutch Return 1969-Up	1	8958719
24975	Spring, 180/180C/4L30E 3rd Clutch Return 1969-Up	1	
24976	Spring, 180/180C Reverse Clutch Return 1969-Up	1	
24976E	Spring, 4L30E Reverse Clutch Return 1989-Up	1	8-08958-719-0
24981	Retainer, 4L30E Overrun Clutch Spring 1989-Up	1	8-96014-901-0
24982	Retainer, 180/180C/4L30E 2nd Clutch Spring 1969-Up	1	5258038
24985	Retainer, 180/180C/4L30E 3rd Clutch Spring 1969-Up	1	5258039
24986	Retainer, 180/180C Reverse Clutch Spring 1969-Up	1	96040351
24986E	Retainer, 4L30E Reverse Clutch Spring 1989-Up	1	
24991	Linkage Assembly, 180/180C Internal 1969-Up	1	
24991E	Linkage Assembly, 4L30E Internal 1989-Up	1	
24995	Park Pawl W/Spring, 180/180C 1969-Up	1	90064258
24995E	Park Pawl W/Spring, 4L30E 1989-Up	1	
24999	Oil Tube Set, 180/180C 1969-Up	1	

© Whatever It Takes Transmission Parts. Inc.

228 4L30E

Input Sprag Rotation

No Reverse, No Drive Engagement, Bind in 2nd Gear

If you install the Input Sprag incorrectly or if the sprag has failed; the symptoms that will follow are no reverse, no drive engagement and a bind in 2nd gear. Check the transmission in all ranges, if you have Manual Low, look for the Sprag as the root of the problem.

Sun Gear Freewheels
Counter Clockwise

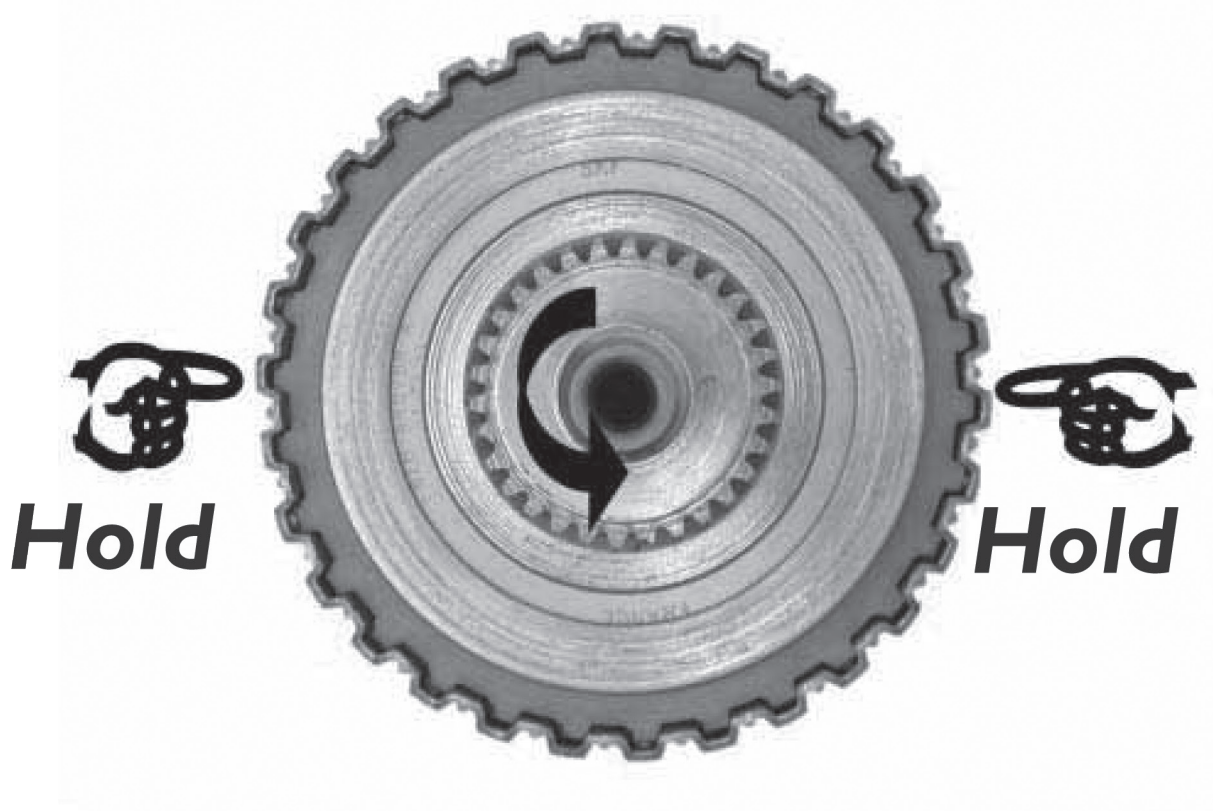

© Whatever It Takes Transmission Parts. Inc.

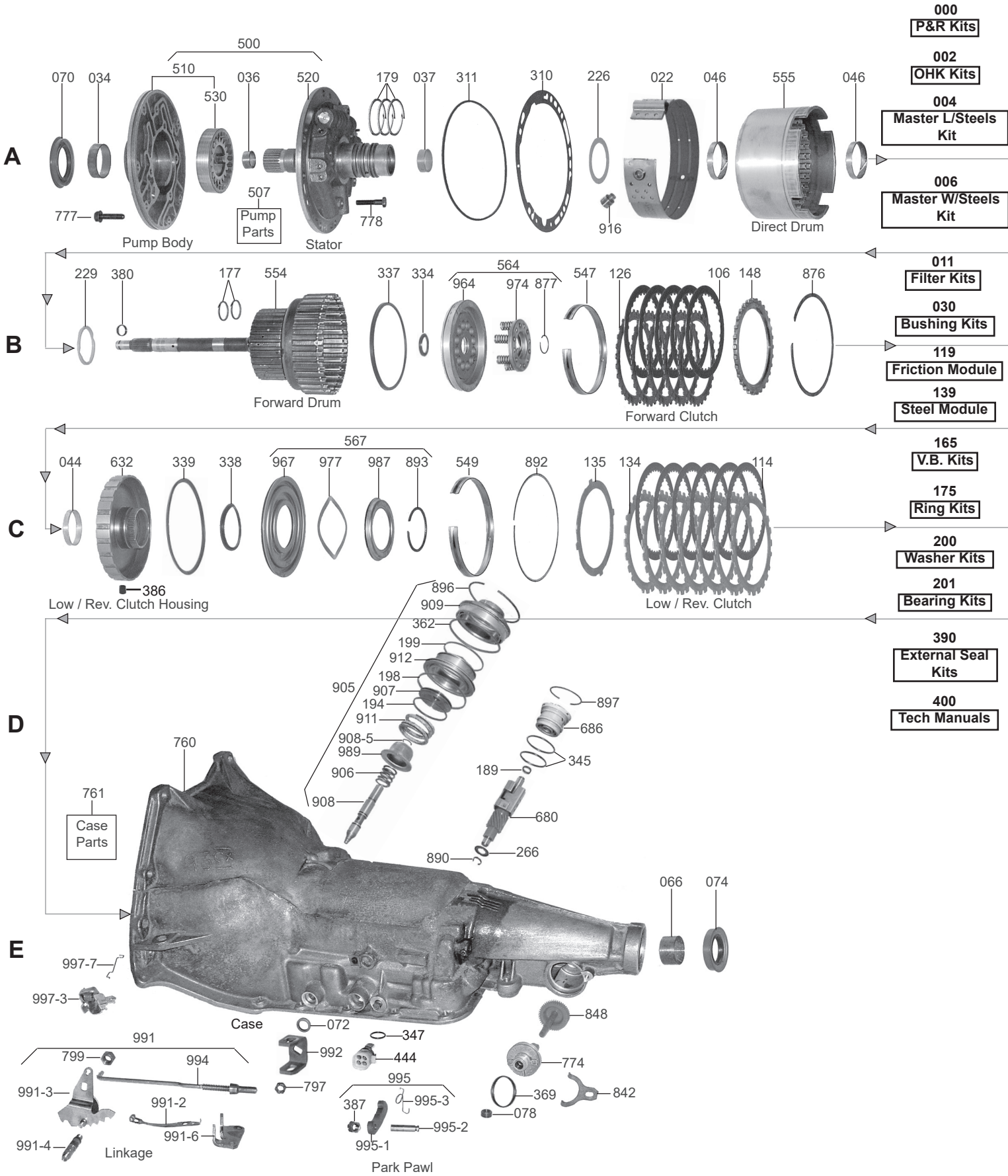

000 P&R Kits

002 OHK Kits

004 Master L/Steels Kit

006 Master W/Steels Kit

011 Filter Kits

030 Bushing Kits

119 Friction Module

139 Steel Module

165 V.B. Kits

175 Ring Kits

200 Washer Kits

201 Bearing Kits

390 External Seal Kits

400 Tech Manuals

© Whatever It Takes Transmission Parts. Inc.

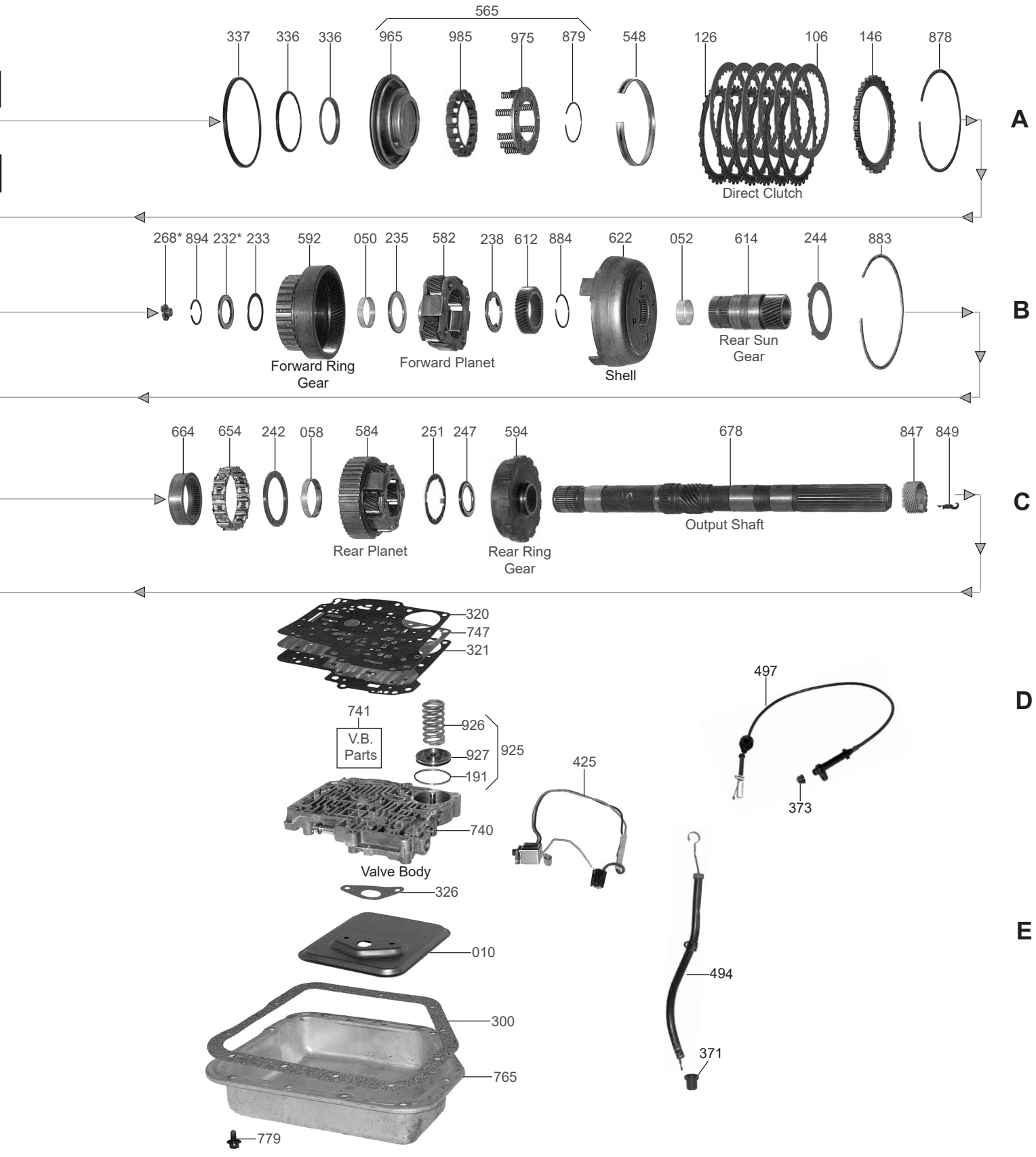

© Whatever It Takes Transmission Parts. Inc.

GM

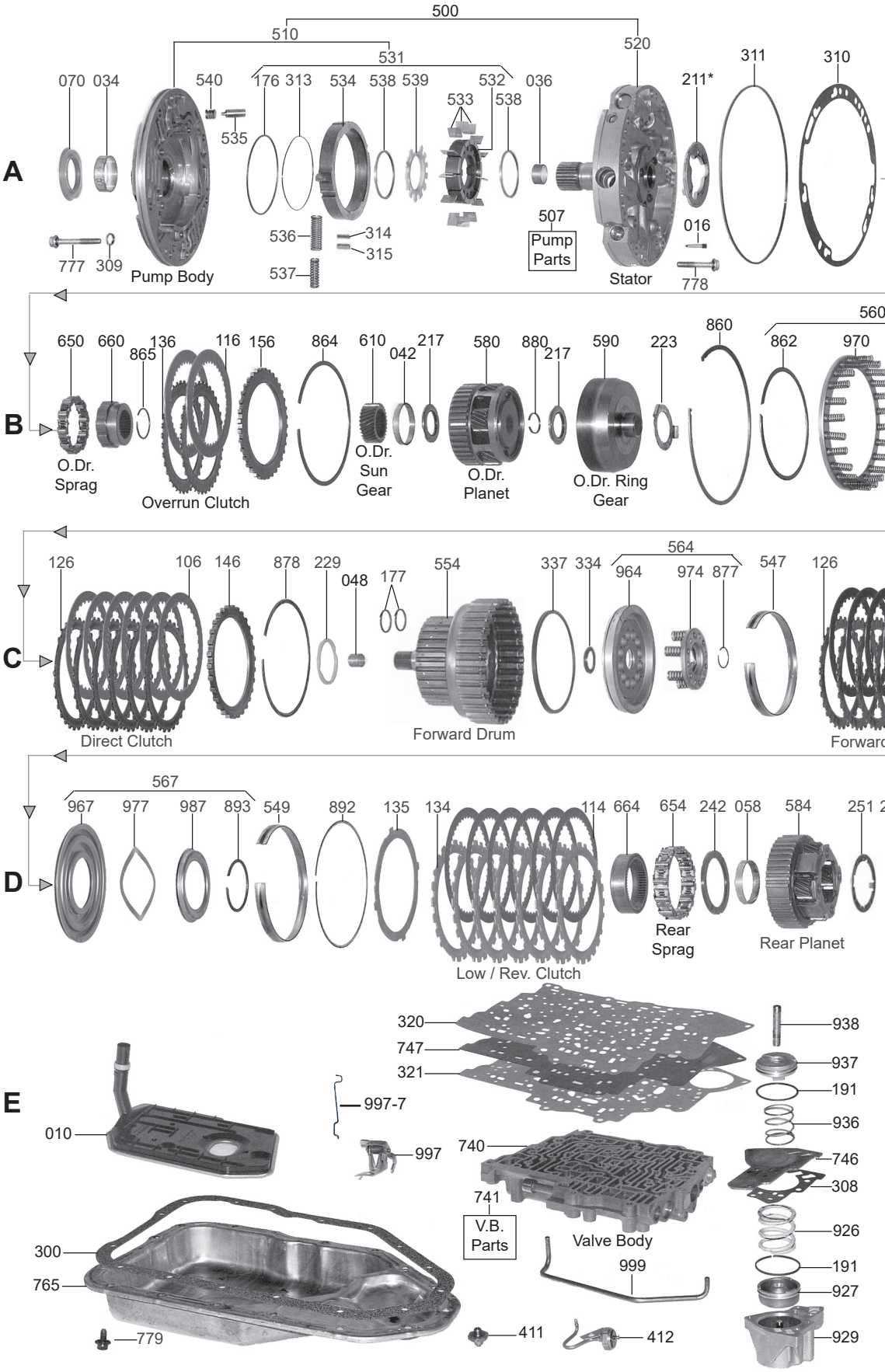

000 P&R Kits
002 OHK Kits
004 Master L/Steels Kit
006 Master W/Steels Kit
011 Filter Kits
030 Bushing Kits
119 Friction Module
139 Steel Module
165 V.B. Kits
175 Ring Kits
200 Washer Kits
201 Bearing Kits
390 External Seal Kits
400 Tech Manuals

© Whatever It Takes Transmission Parts. Inc.

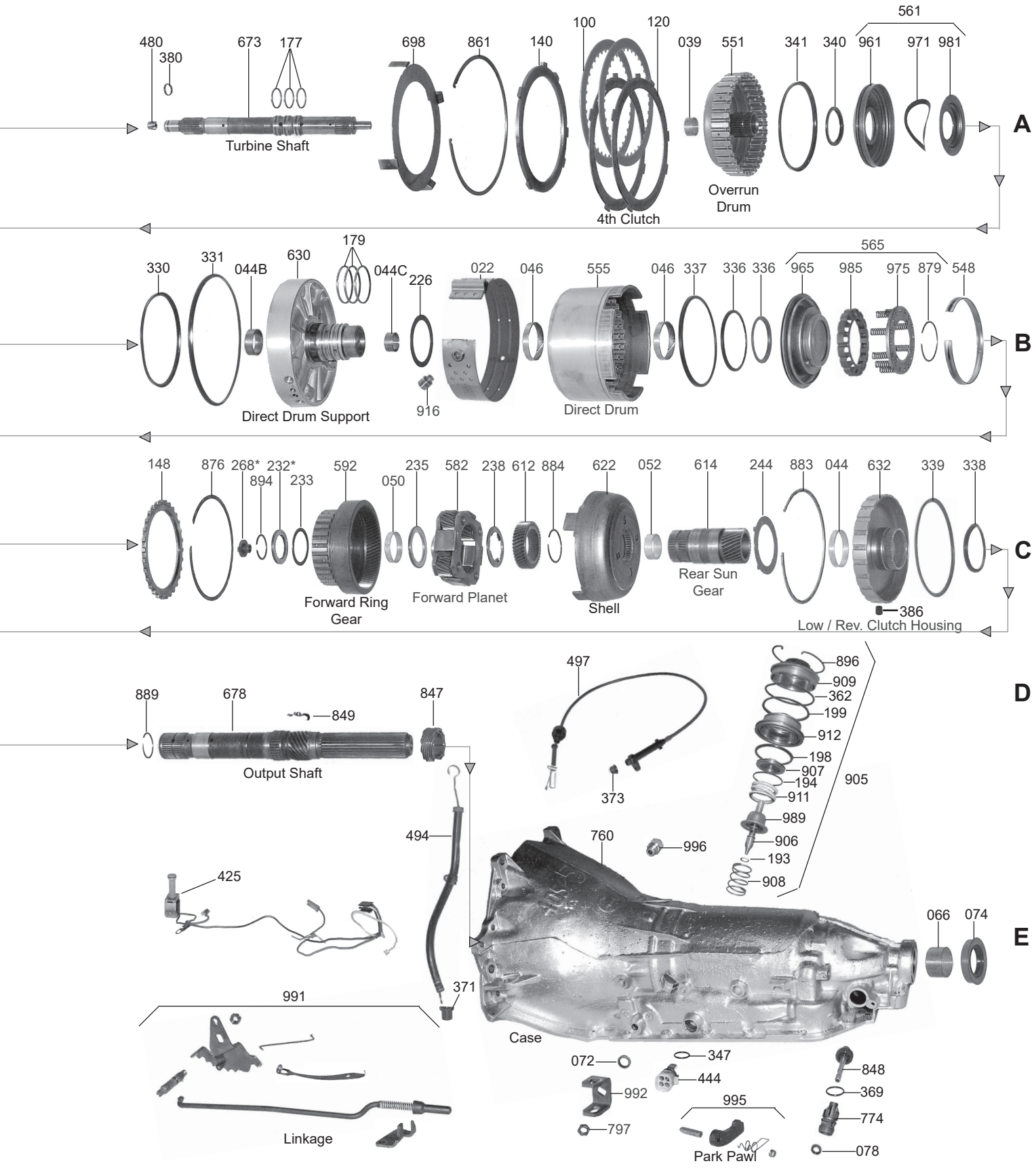

© Whatever It Takes Transmission Parts. Inc.

PART #	PAPER & RUBBER KIT	QTY.	REFERENCE #
54000A	Paper & Rubber Kit, 200/200C 1976-1987	1	
54000B	Paper & Rubber Kit, 200-4R 1981-1990	1	

PART #	OVERHAUL KIT	QTY.	REFERENCE #
54002A	Overhaul Kit, 200/200C 1976-1987	1	
54002B	Overhaul Kit, 200-4R 1981-1990	1	

PART #	MASTER L/STEEL KIT	QTY.	REFERENCE #
54004A	Master L/Steels, 200/200C 1976-1987	1	
54004B	Master L/Steels, 200-4R 1981-1990	1	

PART #	MASTER W/STEEL KIT	QTY.	REFERENCE #
54006A	Master W/Steels, 200/200C 1976-1987	1	
54006B	Master W/Steels, 200-4R 1981-1990	1	

PART #	FILTER	QTY.	REFERENCE #
54010A	Filter, 200 Brass (Shallow Pan) 1976-E79	1	8628935
54010AA	Filter, 200 Nylon (Deep Pan) L1979-87	1	8632949
54010B	Filter, 200-4R 1981-90	1	8634223

PART #	FILTER KIT	QTY.	REFERENCE #
54011A	Filter Kit, 200 Brass (Shallow Pan) 1976-E79	1	
54011AA	Filter Kit, 200 Nylon (Deep Pan) L1979-87	1	
54011B	Filter Kit, 200-4R 1981-90	1	

PART #	MISC. FILTERS	QTY.	REFERENCE #
54016B	Filter, 200-4R Pump Solenoid (Tapered) 1981-90	1	8627509
54019A	Filter, 200 Grit Eater 1981-90	1	

PART #	BANDS	QTY.	REFERENCE #
54022A	Band, 200/200C/200-4R Flex (1.885” Wide) 1976-Up	1	8657210
54022AK	Band, 200/200C/200-4R Flex (1.885” Wide)(Kevlar Lining) 1976-Up	1	
54022B	Band, 200/200C/200-4R Flex (2.300” Wide) 1976-Up	1	

PART #	BUSHINGS	QTY.	REFERENCE #
54030A	Bushing Kit, 200/200C 1976-87	1	
54030B	Bushing Kit, 200-4R 1981-90	1	
54034A	Bushing, 200/200C/200-4R/325-4L Pump Body (Babbit) 1976-90	1	8649963
54036A	Bushing, 200/C/200-4R/325-4L Stator Support(Front)(Also 125/125C/440-T4/4T60E/4T65E/ 4T40E/4T45E Converter Reactor 180/180C/4L30E/700R4/4L60E Stator(Front)(.900” ID) 1976-Up	1	8628915
54036AC	Bushing, 200/C/200-4R/325-4L Stator Support(Front)(Also 125/125C/440-T4/4T60E/4T65E/ 4T40E/4T45E Conv Reactor 180/180C/4L30E/700R4/4L60E Stator(Frt)(.900”ID)(Coated)	1	
54037A	Bushing, 200/200C Stator Support (Rear) 1976-87	1	8628916
54039B	Bushing, 200-4R Overrun Drum 1981-90	1	8634908
54042B	Bushing, 200-4R Overdrive Planet (Use 64044) 1981-90	1	
64044	Bushing, 200-4R Overdrive Planet 1981-90	1	
54044A	Bushing, 200/200C/200-4R Low/Reverse Clutch Housing (Center Support) 1976-90	1	8628929
54044B	Bushing, 200-4R Direct Drum Support (Rear) 1981-90	1	8634913
54044C	Bushing, 200-4R Direct Drum Support (Front) 1981-90	1	
54046A	Bushing, 200/200C Direct Drum (Rear)(1.880”OD) 1976-87	1	8628917
54046AA	Bushing, 200/200C Direct Drum (Front) (2.110”OD) 1976-87	1	8628918
54046B	Bushing, 200-4R Direct Drum (Front) 1981-90	1	8634919
54046BA	Bushing, 200-4R Direct Drum (Babbit)(Rear) 1981-90	1	8634917
54048B	Bushing, 200-4R Forward Drum (Pilot) 1981-90	1	8634925
54050A	Bushing, 200/200C/200-4R Front Ring Gear 1976-90	1	8630990
54052A	Bushing, 200/200C/200-4R Rear Sun Gear 1976-90	1	8628928
54058A	Bushing, 200/200C/200-4R Rear Planet 1976-90	1	8628947
44066	Bushing, 200/200C/200-4R Extension Housing (1.500”ID)(Babbit) 1976-90	1	6260048
44066B	Bushing, 200/200C/200-4R Extension Housing (1.500”ID)(Bronze) 1976-90	1	

© Whatever It Takes Transmission Parts. Inc.

PART #	METAL CLAD SEALS	QTY.	REFERENCE #
74070	Seal, 200/200C/200-4R Front 1976-90	1	8648394
44072	Seal, 200/200C/200-4R Linkage Shaft 1976-90	1	8623056
44074	Seal, 200/200C/200-4R Rear (With Flange)(No Boot) 1976-90	1	1243402
44074C	Seal, 200/200C/200-4R Rear (With Flange)(With Short Boot) 1969-86	1	
T44075	Seal, 200/200C/200-4R Drive Shaft Yoke (Teckpak)	1	35746YS
44078X	Seal, 200/200C/200-4R Speed-O Shaft 1976-90	1	1240382
74089	Retainer, 200-4R Front Seal Lock 1981-90	1	8654491

PART #	FRICTION CLUTCH	QTY.	REFERENCE #
54100B	Friction, 200-4R 4th Clutch .080” 1981-90	2	8657170
54100BHP	Friction, 200-4R 4th Clutch .080” (Hi-Perf.) 1981-90	2	
A54100BHPK	Friction Kit, 200-4R 4th Clutch .080” (Hi-Perf.)(2 Per Kit) 1981-90 (Alto)	1	
54106A	Friction, 200/200C/200-4R Forward & Direct Clutch .078” 1976-90	9-11	8657168
A54106AHD	Friction, 200/200C/200-4R Forward & Direct Clutch .078” (Heavy Duty) 1976-90 (Alto)	9-11	
54106AHP	Friction, 200/200C/200-4R Forward & Direct Clutch .078” (Hi-Perf.) 1976-90	9-11	
A54106AHPK	Friction Kit, 200/200C/200-4R Forward & Direct Clutch .078” (Hi-Perf.)(5 Per Kit) 1976-90 (Alto)	1-2	
54106AS1	Friction, 200/200C/200-4R Forward & Direct Clutch (.078”)(Stage 1)	9-11	
54106BHP	Friction, 200/200C/200-4R Forward & Direct Clutch (.061”) (Red Eagle)	9-11	
54106BS1	Friction, 200/200C/200-4R Forward & Direct Clutch (.061”)(Stage 1)	9-11	
54114A	Friction, 200/200C/200-4R Low/Reverse Clutch .078” 1976-90	4-6	8669069
A54114AHD	Friction, 200/200C/200-4R Low/Reverse Clutch .078” (Heavy Duty) 1976-90 (Alto)	4-6	
54114AHP	Friction, 200/200C/200-4R Low/Reverse Clutch .078” (Hi-Perf.) 1976-90	4-6	
A54114AHPK	Friction Kit, 200/200C/200-4R Low/Reverse Clutch .078” (Hi-Perf.)(6 Per Kit) 1976-90 (Alto)	1	
54116B	Friction, 200-4R Overrun Clutch .080” 1981-90	2	8657031
A54116BHPK	Friction Kit, 200-4R Overrun Clutch .080” (Hi-Perf.)(2 Per Kit) 1981-90 (Alto)	1	
54119A	Friction Module, 200/200C 1976-87	1	
54119B	Friction Module, 200-4R 1981-90	1	
54119BAHP	Friction Module, 200-4R (High Performance) Red Eagle (Alto)	1	
54119BS1	Friction Module, 200-4R (Stage 1) 1981-90	1	

PART #	STEEL CLUTCH	QTY.	REFERENCE #
54120B	Steel, 200-4R 4th Clutch .080” 1981-90	3	8634026
54126A	Steel, 200/200C/200-4R Direct Clutch .090” 1976-90	5-6	8628484
54126AA	Steel, 200/200C/200-4R Forward Clutch .077” (Flat) 1976-90	5-6	8678902
54126AB	Steel, 200/200C/200-4R Forward Clutch .060” (Waved) 1976-90	1	8678901
54126AC	Steel, 200/200C/200-4R Forward & Direct Clutch .060” (Flat) 1976-90 (Use With 54106BSI Friction)	AR	
54126AX	Steel, 200-4R Direct Clutch .100” (Oversize) 1981-90	AR	
54126BX	Steel, 200-4R Forward Clutch .088” (Oversize) 1976-90	AR	
54134A	Steel, 200/200C/200-4R Low/Reverse Clutch .076” 1976-90	6	8628224
54134AX	Steel, 200/200C/200-4R Low/Reverse Clutch .092” (Oversize) 1976-90	AR	
54135A	Steel, 200/200C/200-4R Low/Reverse Clutch .078” (Waved) 1976-90	1	8633371
54136B	Steel, 200-4R Overrun Clutch .080” 1981-90	2	8634050
54139A	Steel Module, 200/200C 1976-87	1	
54139B	Steel Module, 200-4R 1981-90	1	
54139BHP	Steel Module, 200-4R 1981-90 (Kolene)	1	

PART #	CLUTCH PRESSURE PLATES	QTY.	REFERENCE #
54140B	Pressure Plate, 200-4R 4th Clutch (Top) 1981-90	1	8634864
54146A	Pressure Plate, 200/200C Direct Clutch (.245” Thick)(Beveled)(Also Fits 200/200C/200-4R Forward Clutch)	1-2	8678925
54146AB	Pressure Plate, 200/200C/200-4R Direct Clutch (.170” Thick)(Powerpack Component)	1	
54146AC	Pressure Plate, 200-4R Direct Clutch (.180”Thick)(Flat)	1-2	
54148B	Pressure Plate, 200-4R Forward Clutch (Use 54146A)	1	
54156B	Pressure Plate, 200-4R Overrun Clutch 1981-90	1	8634052

PART #	VALVE BODY KITS	QTY.	REFERENCE #
T54165A	Valve Body Kit, 200 (Transgo) 1976-78	1	SK@ 200
T54165AA	Valve Body Kit, 200/200C (Transgo) 1979-87	1	SK@ 279
S54165A	Valve Body Kit, 200/200C (Superior) 1976-87	1	K-200C
T54165B	Valve Body Kit, 200-4R (Transgo) 1981-90	1	SK@ 200/4R
S54165B	Valve Body Kit, 200-4R (Superior) 1981-90	1	K-200-4R

© Whatever It Takes Transmission Parts. Inc.

PART #	VALVE BODY KITS (Continued)	QTY.	REFERENCE #
T54165BA	Valve Body Kit, 200-4R 1981-Up (Contains: Springs & Valves Necessary To Fix An Already Bored Valve Body And Install Hydraulic Lock-Up In Valve Body With Dummy Plug)(Transgo) (This Is A Refill For T54165BAK)	1	
T54165BAK	Valve Body Kit, 200-4R 1981-Up (Contains: All Tools, Springs And Valves Necessary To Bore And Install Hydraulic Lock Up In Valve Body With Dummy Plug)(Transgo)	1	
S54165BS	Valve Body Kit, 200-4R (With Steel Boost Valve & Sleeve)(Superior) 1981-90	1	K-200-4R-V
T74165B	Pump Ring Kit, 200-4R No Yo Yo (Transgo) 1981-90	1	700PK
T74165HP	Pump Ring Kit, 200-4R No Yo Yo (Hi-Perf.)(Transgo) 1981-90	1	700PKH
T54171B	Valve Body Kit, 200-4R (Crisp to Full Race)(Transgo) 1981-90	1	200/4R-HD2
S54171B	Valve Body Kit, 200-4R (Hi-Perf.)(Superior) 1981-90	1	K-200-4R-HP
T54171BA	Valve Body Kit, 200-4R (New DEsign Crisp To Full Race)(Transgo) 1981-90	1	

PART #	OIL SEALING RINGS	QTY.	REFERENCE #
54175A	Ring Kit, 200/200C (Metal) 1976-87	1	
54175AT	Ring Kit, 200/200C (Teflon) 1976-87	1	
54175AAT	Ring Kit, 200 (Teflon) 1976-78	1	
54175ABT	Ring Kit, 200C (Teflon) 1979-87	1	
54175AC	Ring Kit, 200 (Metal) 1976-78	1	
54175AD	Ring Kit, 200C (Metal) 1979-87	1	
54175B	Ring Kit, 200-4R (Metal) 1981-90	1	
54175BT	Ring Kit, 200-4R (Teflon) 1981-90	1	
54176B	Ring, 200-4R Pump Slide (Metal) 1981-90	1	8634079
54177A	Ring, 200/200C/200-4R Turbine Shaft & Forward Drum Shaft (Metal) 1976-90	2-4	8628090
54177AT	Ring, 200/200C/200-4R Turbine Shaft & Forward Drum Shaft (Teflon, Scarf Cut) 1976-90	2-4	
54177BT	Ring, 200-4R Turbine Shaft (Teflon, Solid) 1981-90	1	8634598
54179AT	Ring, 200/200C Stator (Teflon) 1976-87	3	8628055
54179B	Ring, 200-4R Direct Drum Support (Metal) 1981-90	3	8634156
54189AAT	Ring, 200/200C Governor (Teflon) 1976-87	1	8633455
54189BT	Ring, 200-4R Governor (Teflon) 1981-90	1	8632588
54191A	Ring, 200/200C Accumulator (Metal) 1976-87	1	8634161
54191AT	Ring, 200/200C Accumulator 1976-87 & 200-4R 3-4 Accumulator (Teflon) 1981-90	1-2	
54191BT	Ring, 200-4R 1-2 Accumulator (Teflon) 1981-90	1	8634390
54352A	Lathe Cut Seal, 200-4R 1-2 Accumulator 1981-90	1	
54354B	Lathe Cut Seal, 200-4R 3-4 Accumulator 1981-90	1	8635568
54193BT	Ring, 200/200C/200-4R Intermediate Servo Pin (Teflon) 1976-90	1	8630120
54194AD	Ring, 200/200C Intermediate Servo Piston (Inner) 2.79” (Metal) 1976-87	1	8631473
54194ADT	Ring, 200/200C Intermediate Servo Piston (Inner) 2.79” (Teflon) 1976-87	1	
54194AE	Ring, 200/200C/200-4R Intermediate Servo Piston (Inner) 2.28” (Metal) 1976-90	1	8632150
54194AET	Ring, 200/200C/200-4R Intermediate Servo Piston (Inner) 2.28” (Teflon) 1976-90	1	
54194AF	Ring, 200/200C Intermediate Servo Piston (Inner) 1.96” (Metal) 1976-87	1	8630568
54194AFT	Ring, 200/200C Intermediate Servo Piston (Inner) 1.96” (Teflon) 1976-87	1	
54194AG	Ring, 200/200C Intermediate Servo Piston (Inner) 2.15” (Metal) 1976-87	1	8632149
54195AGT	Ring, 200/200C Intermediate Servo Piston (Inner) 2.15” (Teflon) 1976-87	1	
54194AH	Ring, 200/200C/200-4R Intermediate Servo Piston (Inner) 2.41” (Metal) 1976-90	1	8632151
54194AHT	Ring, 200/200C/200-4R Intermediate Servo Piston (Inner) 2.41” (Teflon) 1976-90	1	
54198A	Ring, 200/200C/200-4R Intermediate Servo Piston (Outer)(Large, Metal) 1976-90	1	8628123
54198AT	Ring, 200/200C/200-4R Intermediate Servo Piston (Outer)(Large, Teflon) 1976-90	1	
54361AA	Lip Seal, 200/200C/200-4R Servo 64.5MM (Outer) 1976-90	1	
54361AK	Lip Seal Set, 200/200C/200-4R Servo 1976-90	1	
54199A	Ring, 200/200C/200-4R Intermediate Servo Piston (Outer) 2.67” (Small, Metal) 1976-90	1	8628124
54199AT	Ring, 200/200C/200-4R Intermediate Servo Piston (Outer) 2.67” (Small, Teflon) 1976-90	1	
54199AA	Ring, 200/200C Intermediate Servo Piston (Outer) 2.35” (Small, Metal) 1976-87	1	8628697
54199AAT	Ring, 200/200C Intermediate Servo Piston (Outer) 2.35” (Small, Teflon) 1976-87	1	
54199AB	Ring, 200/200C/200-4R Intermediate Servo Piston (Outer) 2.89” (Small, Metal) 1976-90	1	8628125
54199ABT	Ring, 200/200C/200-4R Intermediate Servo Piston (Outer) 2.89” (Small, Teflon) 1976-90	1	
54199AC	Ring, 200/200C Intermediate Servo Piston (Outer) 2.53” (Small, Metal) 1976-87	1	8630080
54199ACT	Ring, 200/200C Intermediate Servo Piston (Outer) 2.53” (Small, Teflon) 1976-87	1	
54538B	Ring, 200-4R Pump Vane (Steel) 1981-90	2	8657692
54538BK	Ring & Spring Kit, 200-4R (2 Vane Rings, Inner & Outer Springs For The Pump Slide, & Pressure Regulator Spring) 1981-90	1	

PART #	WASHERS & BEARINGS	QTY.	REFERENCE #
54200A	Washer Kit, 200/200C (W/Out Selectives) 1976-87	1	
54200AA	Washer Kit, 200/200C/200-4R Forward Drum to Hub (Selective) 1976-90	1	
54200AB	Washer Kit, 200/200C/200-4R Forward Drum to Output Shaft (Selective) 1976-90	1	
54200B	Washer Kit, 200-4R (W/Out Selectives) 1981-90	1	

© Whatever It Takes Transmission Parts. Inc.

54201A	Bearing Kit, 200/200C 1976-87	1	
54201B	Bearing Kit, 200-4R 1981-90	1	
54211B	Washer, 200-4R Stator .169” (# 1) 1981-90	1	8634120
54211BA	Washer, 200-4R Stator .174” (# 2) 1981-90	1	8634121
54211BB	Washer, 200-4R Stator .178” (# 3) 1981-90	1	8634122
54211BC	Washer, 200-4R Stator .184” (# 4) 1981-90	1	8634123
54211BD	Washer, 200-4R Stator .188” (# 5) 1981-90	1	8634124
54211BE	Washer, 200-4R Stator .193” (# 6) 1981-90	1	8634125
54211BF	Washer, 200-4R Stator .198” (# 7) 1981-90	1	8634386
54211BG	Washer, 200-4R Stator .202” (# 8) 1981-90	1	8634387
54211BH	Washer, 200-4R Stator .207” (# 9) 1981-90	1	8634388
54217B	Bearing, 200-4R Overdrive Planet to Overdrive Ring Gear 1981-90	1	8634035
54223B	Washer, 200-4R Overdrive Ring Gear to Direct Drum Support 1981-90	1	8634146
54226A	Washer, 200/200C Pump to Direct Drum 1976-87	1	8628056
54226B	Washer, 200-4R Direct Drum Support to Direct Drum 1981-90	1	8634157
54229A	Washer, 200/200C/200-4R Direct Drum to Forward Drum 1976-90	1	8628091
54232-1	Shim, 200/200C/200-4R (.007) (Use With 54232 To Adjust Front Planet Inplay)	AR	
54232	Washer, 200/200C/200-4R Forward Drum to Hub .100” 1976-90	1	
54232A	Washer, 200/200C/200-4R Forward Drum to Hub .117” (# 1) 1976-90	1	8630891
54232AA	Washer, 200/200C/200-4R Forward Drum to Hub .124” (# 2) 1976-90	1	8630892
54232B	Washer, 200/200C/200-4R Forward Drum to Hub .131” (# 3) 1976-90	1	8630893
54232C	Washer, 200/200C/200-4R Forward Drum to Hub .138” (# 4) 1976-90	1	8630894
54232D	Washer, 200/200C/200-4R Forward Drum to Hub .145” (# 5) 1976-90	1	8630895
54232E	Washer, 200/200C/200-4R Forward Drum to Hub .152” (# 6) 1976-90	1	8630896
54232F	Washer, 200/200C/200-4R Forward Drum to Hub .159” (# 7) 1976-90	1	8630897
54232G	Washer, 200/200C/200-4R Forward Drum to Hub .166” (# 8) 1976-90	1	8630898
54232H	Washer, 200/200C/200-4R Forward Drum to Hub .173” (# 9) 1976-90	1	8630899
54233A	Washer, 200/200C/200-4R Forward Hub to Spacer 1976-90	1	8628765
54235A	Bearing, 200/200C/200-4R Front Planet to Hub 1976-90	1	8628202
54238A	Bearing, 200/200C/200-4R Front Planet to Sun Gear 1976-90	1	8633875
54242A	Washer, 200/200C/200-4R Rear Planet to Sprag Race 1976-90	1	8628182
54242AA	Bearing, 200/200C/200-4R Rear Planet to Sprag Race 1976-90 (Use 84286B)	1	8648389
84286B	Bearing, 200/200C/200-4R Rear Planet To Sprag Race 1976-90	1	
54244A	Washer, 200/200C/200-4R Shell to Low/Reverse Clutch Hsg .060” (Plastic) 1976-90	1	8628766
54244AA	Washer, 200/200C/200-4R Shell to Low/Reverse Clutch Hsg .080” (Plastic) 1976-90	1	
54244AB	Washer, 200/200C/200-4R Shell to Low/Reverse Clutch Hsg (Metal) (Use 34268) 1976-90	1	8628549
34268	Washer, 200/200C/200-4R Low/Reverse Clutch Housing (4 Tab) (Metal)	1	
54247A	Bearing, 200/200C/200-4R Sun Gear to Rear Ring Gear 1976-90	1	8628962
54251A	Washer, 200/200C/200-4R Rear Planet to Rear Ring Gear 1976-90	1	8628188
54266A	Washer, 200/200C/200-4R Driven Governor Gear to Case 1976-90	1	8628584
54268	Washer, 200/200C/200-4R Forward Drum to Output Shaft .068” (# 1) 1976-90	1	8639291
54268A	Washer, 200/200C/200-4R Forward Drum to Output Shaft .073” (# 2) 1976-90	1	8639292
54268B	Washer, 200/200C/200-4R Forward Drum to Output Shaft .078” (# 3) 1976-90	1	8639293
54268C	Washer, 200/200C/200-4R Forward Drum to Output Shaft .083” (# 4) 1976-90	1	8639294
54268D	Washer, 200/200C/200-4R Forward Drum to Output Shaft .088” (# 5) 1976-90	1	8639295
54268E	Washer, 200/200C/200-4R Forward Drum to Output Shaft .093” (# 6) 1976-90	1	8639296
54268F	Washer, 200/200C/200-4R Forward Drum to Output Shaft .098” (# 7) 1976-90	1	8639297
54268G	Washer, 200/200C/200-4R Forward Drum to Output Shaft .103” (# 8) 1976-90	1	8639298
54268H	Washer, 200/200C/200-4R Forward Drum to Output Shaft .108” (# 9) 1976-90	1	8639299
54268J	Washer, 200/200C/200-4R Forward Drum to Output Shaft .113” (# 10) 1976-90	1	8639300
54268K	Washer, 200/200C/200-4R Forward Drum to Output Shaft .118” (# 11) 1976-90	1	8639301
54268L	Washer, 200/200C/200-4R Forward Drum to Output Shaft .123” (# 12) 1976-90	1	8639302
54268M	Washer, 200/200C/200-4R Forward Drum to Output Shaft .128” (# 13) 1976-90	1	8639303
54268N	Washer, 200/200C/200-4R Forward Drum to Output Shaft .133” (# 14) 1976-90	1	8639304
54268P	Washer, 200/200C/200-4R Forward Drum to Output Shaft .138” (# 15) 1976-90	1	8639305

PART #	GASKETS & RUBBER COMPONENTS	QTY.	REFERENCE #
54300A	Gasket, 200/200C Pan 1976-87	1	8633380
54300B	Gasket, 200-4R Pan 1981-90	1	8634198
54306B	Gasket, 200-4R Governor Cover 1981-90	1	8634477
54308B	Gasket, 200-4R Accumulator Housing to Plate 1981-90	1	8634166
44309	Gasket, 200/200C/200-4R Pump Bolt 1976-90	6	8626281
54310A	Gasket, 200 Pump to Case 1976-78	1	8633899
54310AB	Gasket, 200/200C Pump to Case 1979-87	1	
54310B	Gasket, 200-4R Pump to Case 1981-90	1	8634047
54311A	O-Ring, 200/200C Pump 1976-87	1	8628052
54311B	O-Ring, 200-4R Pump 1981-90	1	8634046
54313B	O-Ring, 200-4R Pump Slide 1981-90	1	8634088
54314B	Seal, 200-4R Pump Slide (Rubber) 1981-90	1	8631283

© Whatever It Takes Transmission Parts. Inc.

PART #	GASKETS & RUBBER COMPONENTS	QTY.	REFERENCE #
54315B	Seal, 200-4R Pump Slide (Teflon) 1981-90	1	8631877
54320A	Gasket, 200 Valve Body (Upper) 1976-78	1	8630445
54320AB	Gasket, 200C Valve Body (Upper) 1979-87	1	8633624
54320B	Gasket, 200-4R Valve Body (Upper) 1981-90	1	8634653
54321A	Gasket, 200 Valve Body (Lower) 1976-78	1	8628870
54321AB	Gasket, 200C Valve Body (Lower) 1979-87	1	8633623
54321B	Gasket, 200-4R Valve Body (Lower) 1981-90	1	8634654
54326A	Gasket, 200/200C Filter 1979-87	1	8628300
54328A	O-Ring, 200C Lock/Up Solenoid 1978-87	1	8630052
54328B	O-Ring, 200-4R Lock/Up Solenoid 1981-90	1	8630049
54330B	Lip Seal, 200-4R 4th Clutch (Inner) 1981-90	1	8635562
54331B	Lip Seal, 200-4R 4th Clutch (Outer) 1981-90	1	8634024
54334A	Lip Seal, 200/200C/200-4R Forward Clutch Piston (Inner) 1976-90	1	8630102
54336A	Lip Seal, 200/200C/200-4R Direct Clutch Piston (Inner) 1976-90	1	8628079
54336AC	Lip Seal, 200/200C/200-4R Direct Clutch Piston (Center) 1976-90	1	8630295
54337A	Lip Seal, 200/200C/200-4R Forward & Direct Clutch Piston (Outer) 1976-90	2	8628078
54338A	Lip Seal, 200/200C/200-4R Low/Reverse Clutch Piston (Inner) 1976-90	1	8628246
54338AK	Lip Seal Set, 200/200C/200-4R Low/Reverse Clutch Piston 1976-90	1	
54339A	Lip Seal, 200/200C/200-4R Low/Reverse Clutch Piston (Outer) 1976-90	1	8628364
54340B	Lip Seal, 200-4R Overrun Clutch Piston (Inner) 1981-90	1	8634054
54341B	Lip Seal, 200-4R Overrun Clutch Piston (Outer) 1981-90	1	8634053
54345A	O-Ring, 200/200C Governor Cover (Outer) 1976-87	1	8628955
54345AA	O-Ring, 200/200C Governor Cover (Inner) 1976-87	1	8628248
54352A	Lathe Cut Seal, 200-4R 1-2 Accumulator 1981-90	1	
54354B	Lathe Cut Seal, 200-4R 3-4 Accumulator 1981-90	1	8635568
54361A	Lip Seal, 200/200C/200-4R Servo 68MM (Outer) 1976-90	1	
54361AA	Lip Seal, 200/200C/200-4R Servo 64.5MM (Outer) 1976-90	1	
54361AB	Lip Seal, 200/200C/200-4R Servo 51MM (Inner) 1976-90	1	8639782
54361AC	Lip Seal, 200/200C/200-4R Servo 55MM (Inner) 1976-90	1	8639783
54361AD	Lip Seal, 200/200C/200-4R Servo 57MM (Inner) 1976-90	1	8639784
54361AK	Lip Seal Set, 200/200C/200-4R Servo 1976-90	1	
54362A	O-Ring, 200/200C/200-4R Servo Cover 1976-87	1	8628136
54362BK	Seal Set, 200-4R Servo (Fits Superiors Super Servo # 54907BS)(Contains: 2 Lip Seals & 1 O-Ring)	1	
103368	O-Ring, 200/200C/200-4R Speed-O Sleeve (Inner) 1976-87	1	1240382
34369A	O-Ring, 200/200C/200-4R Speed-O Sleeve (Outer)(BPO Case Only) 1976-87	1	
64369	O-Ring, 200-4R Speed-O Housing 1982-Up	1	
44371A	O-Ring, 200/200C/200-4R Filler Tube 1969-79	1	6264902
44371B	Boot, 200C/200-4R Filler Tube 1980-86	1	1259475
54373A	O-Ring, 200/200C/200-4R Detent 1976-90	1	358424
54373B	Boot, 200/200C/200-4R Detent 1976-90	1	25518260
74379	Seal, 200-4R Filter 1982-92	1	
44380	O-Ring, 200/200C/200-4R Input Shaft 1976-90	1	8630049
64380	O-Ring, 200C Turbine Shaft (Goes Behind Splines) 1982-Up (4 & 6 Cylinder Type)	1	
54386A	Cup Plug Seal, 200/200C/200-4R Low/Reverse Clutch Housing 1976-90	1	8631577
54390A	External Seal Kit, 200/200C 1976-Up	1	
54390B	External Seal Kit, 200-4R 1981-90	1	

PART #	TECHNICAL MANUALS	QTY.	REFERENCE #
54400A	Manual, 200C Technical 1979-87	1	THM200C
54400B	Manual, 200-4R Technical 1981-90	1	200-4R

PART #	ELECTRICAL COMPONENTS	QTY.	REFERENCE #
54411A	Switch, 200C Pressure 1983-87	1	24200843
54411B	Switch, 200-4R 4th Clutch Pressure (1 Prong) 1981-90	1	8683502
64412	Switch, 200-4R Pressure (2 Prong) 1981-90	1	8643710
54416A	Switch, 200C/200-4R Lock/Up Delay (50-54 PSI) 1981-90	1	8635869
44416A	Switch, 200C/200-4R Governor (40 PSI) 1979-90	1	8648062
44416B	Switch, 200C/200-4R Governor (46 PSI) 1979-90	1	8648063
54416B	Switch, 200-4R Governor (36 PSI) 1981-90	1	8644658
54416BA	Switch, 200-4R 4-3 Pressure Switch W/Tube 1981-90	1	8634463
54416BB	Switch, 200-4R 4-3 Pressure Switch W/Tube (2 Prong) 1981-90	1	8634853
44416C	Switch, 200C/200-4R Governor (48 PSI) 1979-90	1	8648064
44416D	Switch, 200C/200-4R Governor (50 PSI) 1979-90	1	8648065
44416DA	Switch, 200C/200-4R Governor (52 PSI) 1979-90	1	8648066
44416E	Switch, 200C/200-4R Governor (54 PSI) 1979-90	1	8648067

© Whatever It Takes Transmission Parts. Inc.

84425	Solenoid, 200C TCC (Universal) 1979-87	1	8646419
T84425K	Solenoid, 200C Lock-Up (6 Pack With Free Posi-Twist Travel Pack)(Teckpak)	1	K84856U
54425A	Solenoid, 200C TCC (W/Closed Loop) 1979-87	1	8633945
54425AA	Solenoid, 200C TCC (3 Wire) 1979-87	1	8633947
54425AB	Solenoid, 200C TCC (PT, 1G2, W/Gr) 1979-87	1	8633946
54425AC	Solenoid, 200C TCC (PT, 1G2, W/3) 1979-87	1	8638931
54425B	Solenoid, 200-4R TCC (Universal) 1981-90 (On Early One Wire Types A Ring Terminal & 1/4" Washer Is Needed And Not Included In This)	1	
54425BA	Solenoid, 200-4R TCC (W/259, 262, 305, 307 CI) 1982-86	1	8634967
54425BB	Solenoid, 200-4R TCC (W/231 CI V-6) 1984-86	1	8639900
54425BC	Solenoid, 200-4R TCC (W/305 CI V-8) 1984-86	1	8639901
54425BE	Solenoid, 200-4R TCC (W/350N) 1984-86	1	8634961
S54425-2	Snout With O-Ring, 200-4R TCC Solenoid (Aluminum)(Sonnax)	1	
54434A	Switch, 200C TCC Vacuum Control (On Engine) 1979-Up	1	14014519
44442A	Universal Adjustment Vacuum Switch, 200-4R (Superior) (1" to 6" Of Vaccum)(Superior)	1	
44442B	Universal Adjustment Vaccum Switch, 200-4R (Superior) (6" to 22" Of Vaccum)(Superior)	1	
74444	Connector, 200C Case (2 Prong) 1979-Up	1	12300205
84444	Connector, 200C/200-4R Case (4 Prong) Square	1	
74444A	Connector, 200C/200-4R Case (3 Prong) 1979-Up	1	8634383

PART #	MISC. COMPONENTS	QTY.	REFERENCE #
54480A	Ball & Capsule, 200-4R Input Drum 1981-90	1	8685839
74480C	Ball & Capsule, 200-4R In Case by Servo 1981-90	1	8634400
74483B	Cup Plug, 200/200C Park Pawl Shaft (.385"OD)	1	8620318
74484C	Orifice Plug, 200C Holds Screen In Pump)	1	8630529
54487A	Grommet, 200/200C/200-4R Shift Lever (Black, Oval) 1976-Up	1	
T44489	Dust Cover, 200/200C/200-4R Universal (Teckpak) 1976-Up	1	K35803U
34490	Vent, 200/200C/200-4R Case (Front, Plastic) 1978-90	1	8633408
54490A	Vent, 200 Case (Rear) 1976-77	1	8630470
S44497-1	Detent Cable End, 200C/200-4R (5 Per Kit) (Sonnax)	1	
T44494U	Filler Tube & Dip Stick Kit, 200/200C/200-4R Fitz All (Teckpak) 1976-Up	1	K35999U
T44494UL	Filler Tube & Dip Stick, 200/200C/200-4R (Fitz All) With Lockdown Stick 1969-86 (Teckpak)	1	
T54497BHP	Detent Cable, 200/200C/200-4R (Hi-Performance)(Overall Length Is 86") 1979-92 (Teckpack)	1	
S74497CR-1	TV Cable Rebuild Kit, 200/200-4R (Cabel With Ends)(Customer Uses His Housing)(Sonnax)	1	
S74497CR-3	Cable Bracket, 200C/200-4R Throttle Cable And TV Cable (Sonnax)	1	
T54497C	Detent Cable, 200C/200-4R (Overall Length 45")	1	
T54497U	Detent Cable, 200/200C/200-4R Universal 1976-Up	1	K65940U
T44497UA	Detent Cable, 200/200C Self Adjusting Universal 1976-80 (Teckpak)	1	
T54497UA	Detent Cable, 200/200C/200-4R Self Adjusting Universal (Teckpak)	1	

PART #	HARD PARTS	QTY.	REFERENCE #
54500A	Pump, 200 Complete 1976	1	
54500AA	Pump, 200 Complete 1977-78	1	
54500AB	Pump, 200C Complete 1979-87 (Body Cast # 527)(Stator Cast # 414/536)(Can Use 54500AF)	1	
54500AC	Pump, 200 Complete 1979-80	1	
54500AD	Pump, 200 Complete (Chevette)	1	
54500AF	Pump, 200C Complete (Body Cast # 159)(Stator Cast # 149) 1979-87	1	
54500B	Pump, 200-4R Complete (Stator Cast # 150; Body Cast # 149)	1	
54500BA	Pump, 200-4R Complete (Stator Cast # 088; Body Cast # 082 or 690)	1	

PART #	PUMP COMPONENTS	QTY.	REFERENCE #
74089	Retainer, 200-4R Front Seal Lock 1981-90	1	8654491
54176B	Ring, 200-4R Pump Slide (Metal) 1981-90	1	8634079
54313B	O-Ring, 200-4R Pump Slide 1981-90	1	
54314B	Seal, 200-4R Pump Slide (Rubber) 1981-90	1	8631283
54315B	Seal, 200-4R Pump Slide (Teflon) 1981-90	1	8631877
54507A-5	Check Ball, 200/200C Pump 1976-87	1	7808541
54507AC-1	Valve, 200C Converter Clutch Valve (Inside Pump) 1979-87	1	8633877
54507AC-2	Sleeve, 200C Converter Clutch Valve (Inside Pump) 1979-87	1	8620539
54507ACK	Valve Kit, 200C Lock-Up Valve (Transgo) 1979-87	1	200-LU
54507AP-3	Spring, 200C Pressure Regulator	1	8630093
54507ARK	Valve, 200C Reverse Boost Valve W/Sleeve 1981-87	1	8634939
54507B-4	Pin, 200-4R Stator Tube Locator Pin 1981-90	1	
54507BC-6	Stop, 200-4R Lock-Up Valve 1981-90	1	8634705
54507BP-3	Spring, 200-4R Pressure Regulator Valve (Orange) 1981-90	1	8639002
54507BP-3A	Spring, 200-4R Pressure Regulator Valve (Green) 1981-90	1	8639164
S74507C-1	Valve, 200-4R TCC Apply Valve	1	

© Whatever It Takes Transmission Parts. Inc.

PART #	PUMP COMPONENTS (Continued)	QTY.	REFERENCE #
S54507PAK	Valve Kit, 200/200C Pressure Regulator With O-Rings & End Plug (Sonnax)	1	
74507P-1	Valve, 200-4R Pressure Regulator 1981-90	1	
74507P-3	Spring, 200-4R Pressure Regulator 1981-90	1	8634490
74507R-4	C-Clip, 200-4R Holds Reverse Boost Valve In 1981-90	1	
74507RCK	Valve & Sleeve Assembly, 200-4R Reverse Boost (.336"OD Large Land & .246"OD Small Land)	1	
S74507RDK	Valve & Sleeve Assembly, 200-4R Reverse Boost (.363"OD Large Land & .283"OD Small Land) (With O-Rings)(Sonnax)	1	
74507RGK	Valve & Sleeve Assembly, 200-4R Reverse Boost (.374"OD Large Land & .296"OD Small Land)	1	
S74507T	Valve & Sleeve Assembly, 200-4R TV Boost (.500"OD) (Sonnax) (Factory Style)	1	
74507TK	Valve & Sleeve, 200-4R TV Boost (.500"OD Valve) 1981-90 (O-Ring Type)	1	
S74507TA	Valve & Sleeve Assembly, 200-4R TV Boost (.471"OD) (Sonnax) (Factory Style)	1	
74507TAK	Valve & Sleeve, 200-4R TV Boost (.471"OD Valve) 1981-90 (O-Ring Type)	1	
S74507TB	Valve & Sleeve Assembly, 200-4R TV Boost (.423"OD)(Sonnax) (Factory Style)	1	
S74507TBK	Valve & Sleeve Assembly, 200-4R TV Boost (.423"OD)(Sonnax)(O-ring Type)	1	
54529B	Stator Shaft Tube, 200-4R 1981-90	1	

PART #	HARD PARTS (Continued)	QTY.	REFERENCE #
54510A	Pump Body, 200 1976	1	
54510AA	Pump Body, 200 1977-78	1	
54510AB	Pump Body, 200C (Cast # 527) 1979-87	1	
54510AC	Pump Body, 200 1979-80	1	
54510AD	Pump Body, 200C (Cast # 159) 1979-87	1	
54510B	Pump Body, 200-4R (Cast # 149) 1981-82	1	
54510BA	Pump Body, 200-4R (Cast # 082 or 690) 1982-90	1	
54510BB	(Use 54510BA)	1	
54520A	Pump Stator, 200 1976	1	
54520AA	Pump Stator, 200 (No Vent) E1977	1	
54520AB	Pump Stator, 200 (W/Vent) L1977-79	1	
54520AC	Pump Stator, 200C (Cast # 414 or 536) 1979-87	1	
54520AD	Pump Stator, 200 (Chevette)	1	
54520AE	Pump Stator, 200 (Cast # 738)(W/Vent) 1979-80	1	
54520AF	Pump Stator, 200C (Cast # 149) 1979-87	1	
54520B	Pump Stator, 200-4R (Cast # 150) 1981-82	1	
54520BA	Pump Stator, 200-4R (Cast # 088) 1982-90	1	
54529B	Shaft, 200-4R Stator Tube 1981-90	1	
54530A	Pump Gear Set, 200 (.677") 1976-78	1	
54530AA	Pump Gear Set, 200 (.776") 1976-78	1	
54530AB	Pump Gear Set, 200 (.777") 1976-78	1	
54530AC	Pump Gear Set, 200C (.778") 1979-87	1	
54532B	Rotor, 200-4R Pump (7 Vane) 1981-90	1	
54532BA	Rotor, 200-4R Pump (10 Vane Type) 1981-90	1	
64533	Vane, 200-4R Pump 1981-90	7-10	
74533AK	Vane & Ring Kit, 200-4R Pump (7 Vane) 1981-90	1	
74533K	Vane & Ring Kit, 200-4R Pump (10 Vane) 1981-90	1	
54534A	Pump Slide, 200-4R (.7069") 1981-90	1	8634081
54534B	Pump Slide, 200-4R (.7074") 1981-90	1	8634082
54534BA	Pump Slide, 200-4R (.7079") 1981-90	1	8634083
54534BB	Pump Slide, 200-4R (.7084") 1981-90	1	8634084
54534BC	Pump Slide, 200-4R (.7089") 1981-90	1	8634085
54535B	Pin, 200-4R Pump Slide Pivot 1981-90	1	8634097
74536	Spring, 200-4R Pump Slide (Outer) 1981-90	1	8639563
74536K	Spring Set, 200-4R Pump Slider (Inner & Outer) 1981-90	1	
74537	Spring, 200-4R Pump Slide (Inner) 1981-90	1	8639562
54538B	Ring, 200-4R Pump Vane (Steel) 1981-90	2	8678127
54538BK	Ring & Spring Kit, 200-4R (2 Vane Rings, Inner & Outer Springs For The Pump Slide, & Pressure Regulator Spring) 1981-90	1	
54539B	Rotor Guide, 200-4R Pump (7 Vane) 1981-90	1	8654733
54539BA	Rotor Guide, 200-4R Pump (10 Vane) 1981-90	1	12337830
54540B	Spring, 200-4R Pivot Pin 1981-90	1	8634098
54547A	Apply Ring, 200/200C/200-4R Forward Clutch (V-8) 1976-90	1	8628458
54548A	Apply Ring, 200/200C/200-4R Direct Clutch (V-8) 1976-90	1	8628459
54549	Apply Ring, 200/200C/200-4R Low/Reverse Clutch (V-8) 1976-90	1	8678939
54551B	Drum, 200-4R Overrun Clutch 1981-90	1	8634107
54554A	Drum, 200 Forward Clutch (4 & 6 Cyl) 1976-E79	1	8638944
54554AA	Drum, 200 Forward Clutch (V-8) 1976-E79	1	8632953

© Whatever It Takes Transmission Parts. Inc.

54554AB	Drum, 200C Forward Clutch (V-8) L1979-87	1	8632969
54554AC	Drum, 200C Forward Clutch (V-6) 1982-87	1	8633948
54554B	Drum, 200-4R Forward Clutch (With Check Ball In Drum) 1981-90	1	8634926
54554BA	Drum, 500-4R Forward Clutch (No Check Ball In Drum) 1981-90	1	
54555A	Drum, 200/200C Direct Clutch 1976-87	1	8630922
54555B	Drum, 200-4R Direct Clutch 1981-90	1	8677993
54560B	Piston Kit, 200-4R 4th Clutch 1981-90	1	
54561B	Piston Kit, 200-4R Overrun Clutch 1981-90	1	
54564A	Piston Kit, 200/200C/200-4R Forward Clutch (Steel Piston) 1976-90	1	
54564AA	Piston Kit, 200/200C/200-4R Forward Clutch (Aluminum Piston) 1979-90	1	
54565A	Piston Kit, 200/200C/200-4R Direct Clutch 1976-90	1	
54567A	Piston Kit, 200/200C/200-4R Low/Reverse Clutch 1976-90	1	
54580B	Planet, 200-4R Overdrive 1981-90	1	8678912
54582A	Planet, 200/200C/200-4R Forward 1976-90	1	8677982
54584A	Planet, 200/200C/200-4R Rear 1976-90	1	8677999
54590B	Ring Gear, 200-4R Overdrive Planet 1981-90	1	8634037
54592A	Ring Gear, 200/200C/200-4R Forward Planet 1976-90	1	8678944
54594A	Ring Gear, 200/200C/200-4R Rear Planet 1976-90	1	8678904
54610B	Sun Gear, 200-4R Overdrive Planet 1981-90	1	8677983
54612A	Sun Gear, 200/200C/200-4R Forward Planet 1976-90	1	8628190
54614A	Sun Gear, 200/200C/200-4R Rear Planet 1976-90	1	8678905
54622A	Shell, 200/200C/200-4R Input Drum 1976-90	1	8648484
54622AH	Shell, 200/200C/200-4R Input Drum (Hardened) 1976-90	1	
54630B	Support, 200-4R Direct Drum (Aluminum) 1981-90	1	8677987
54632A	Housing, 200/200C/200-4R Low/Reverse Clutch (Steel) 1976-90	1	8678906

PART #	SPRAGS & ONE WAY CLUTCHES	QTY.	REFERENCE #
54650B	Sprag, 200-4R Overdrive 1981-90	1	8634049
54654A	Sprag, 200/200C/200-4R Low Clutch (Narrow, Early)	1	8628183
54654AA	Sprag, 200/200C/200-4R Low Clutch (Wide, Late)	1	
54660B	Inner Race, 200-4R Overdrive Sprag 1981-90	1	8634038
54664A	Inner Race, 200/200C/200-4R Low Clutch Sprag 1976-90	1	8628184

PART #	HARD PARTS (Continued)	QTY.	REFERENCE #
54673B	Shaft, 200-4R Turbine 1981-90	1	8677998
54678	Shaft, 200 Output (1st Design) 14 Teeth Governor Gear 1976-77 (Uses A Metal Speed-O Gear)	1	
54678A	Shaft, 200 Output (2nd Design) 16 Teeth Governor Gear 1977-78 (Uses A Metal Speed-O Gear) (16 1/4” Long)	1	
54678AA	Shaft, 200C Output (3rd Design) 16 Teeth Governor Gear 1979-Up (Uses A Plastic Speed-O Gear) (16 1/4” Long)	1	8648472
54678B	Shaft, 200-4R Output (12 1/4” Long)(14 Teeth Governor Gear) 1981-90	1	8677997
54680A	Governor, 200/200C (14 Teeth, 1 Spring) 1976-87	1	8655982
54680AA	Governor, 200/200C (14 Teeth, 2 Spring) 1976-87	1	8638921
54680AB	Governor, 200/200C (13 Teeth, 2 Spring) 1976-87	1	8633942
54680AC	Governor, 200/200C (13 Teeth, 1 Spring) 1976-87	1	8633940
54680B	Governor, 200-4R (13 Teeth Speed-O Gear)(Small Weight Is .750” Tall) 1981-90	1	8655962
54680BA	Governor, 200-4R (12 Teeth Speed-O Gear) 1981-90	1	8655963
54680BB	Governor, 200-4R (11 Teeth Speed-O Gear) 1981-90	1	8655976
54680BC	Governor, 200-4R (10 Teeth Speed-O Gear) 1981-90	1	
54680BD	Governor, 200-4R (13 Teeth Speed-O Gear)(Small Weight Is .657” Tall) 1981-90	1	8655965
54680BE	Governor, 200-4R (14 Teeth Speed-O Gear)(Natural) 1981-90	1	8655964
54680BF	Governor, 200-4R (14 Teeth Speed-O Gear)(Green) 1981-90	1	24200558
54681A-6	Check Ball, 200/200C Governor Shaft 1976-87	2	8622757
54684A	Gear Kit, 200/200C Governor (14 Teeth) 1976-87	1	
54684AA	Gear Kit, 200/200C Governor (13 Teeth) 1976-87	1	8638924
54684B	Gear Kit, 200-4R Governor (12 Teeth) 1981-90	1	8634935
54684BA	Gear Kit, 200-4R Governor (11 Teeth) 1981-90	1	8634965
54684BB	Gear Kit, 200-4R Governor (13 Teeth) 1981-90	1	8634934
54684BC	Gear Kit, 200-4R Governor (10 Teeth) 1981-90	1	8639906
54686A	Cover, 200/200C Governor 1976-87	1	8628933
54686B	Cover, 200-4R Governor 1981-90	1	
54698B	Plate, 200-4R Oil Deflector (4 Legs) 1981-90	1	8634701
54740A	Valve Body, 200 1976-78	1	
54740AA	Valve Body, 200C (All Except 1984 W/3rd Clutch Oil Switch) 1979-87	1	
54740AB	Valve Body, 200C (W/3rd Clutch Oil Switch) 1984	1	
54740B	Valve Body, 200-4R 1981-90	1	

© Whatever It Takes Transmission Parts. Inc.

PART #	VALVE BODY COMPONENTS	QTY.	REFERENCE #
106680A-3	Spring, 200/200C/200-4R Throttle Valve (Anti-Stick) 1976-90	1	
S54741ANK	Valve & Sleeve Kit, 200/200C/200-4R Throttle Valve (.357")(Sonnax) 1976-Up	1	65754-01K
S54741AANK	Valve & Sleeve Kit, 200/200C/200-4R Throttle Valve (.390")(Sonnax) 1976-Up	1	65754-02K
S54741ABNK	Valve & Sleeve Kit, 200/200C/200-4R Throttle Valve (.430")(Sonnax) 1976-Up	1	65754-03K
54741B-1	Valve, 200-4R Manual 1981-90	1	
S74741N-3A	Spring, 200-4R TV Plunger Valve (5 Per Pack) 1982-86 (Sonnax)	1	

PART #	HARD PARTS (Continued)	QTY.	REFERENCE #
54746B	Plate, 200-4R Accumulator 1981-90	1	
54747BA	Plate, 200-4R Valve Body (Monte Carlo SS) 1981-90	1	8639554
54747BB	Plate, 200-4R Valve Body (Square, Wide U, Square, UVV) 1981-90	1	8657010
54747BE	Plate, 200-4R Valve Body (Code X) 1981-90	1	8657309
54760A	Case, 200 Chevy 1976-78	1	
54760AA	Case, 200 Chevy 1979-81	1	
54760AB	Case, 200C Chevy 1981-Up	1	
54760AC	Case, 200 Buick, Olds, Pontiac 1976-78	1	
54760AD	Case, 200 Buick, Olds, Pontiac 1979-81	1	
54760AE	Case, 200C Buick, Olds, Pontiac 1981-Up	1	
54760AF	Case, 200 Chevette 1976-78	1	
54760AG	Case, 200 Chevette 1979-Up	1	
54760AH	Case, 200 Chevy Luv 1976-78	1	
54760AK	Case, 200 Monza (4 Bolt Holes on Extension Housing) 1976-78	1	
54760AL	Case, 200 Monza (3 Bolt Holes on Extension Housing) 1976-78	1	
54760AM	Case, 200 Monza 1979-80	1	
54760AN	Case, 200C Monza 1980-Up	1	
54760AP	Case, 200C Chevy S-10 V-6 1981-Up	1	
54760AR	Case, 200 Sunbird 1979-81	1	
54760AS	Case, 200C Sunbird 1981-Up	1	
54760B	Case, 200-4R 1981-Up	1	8634950

PART #	CASE COMPONENTS	QTY.	REFERENCE #
54386A	Cup Plug Seal, 200/200C/200-4R Low/Reverse Clutch Housing 1976-Up	1	8682481
54761A	Low/Reverse Clutch Housing Fix, 200/200C/200-4R 1976-Up	1	M20706

PART #	HARD PARTS (Continued)	QTY.	REFERENCE #
54765A	Pan, 200 1976-78	1	
54765AA	Pan, 200C Deep 1979-Up	1	8648349
54765B	Pan, 200-4R 1981-Up	1	8639950
44774	Housing, 200/200C Speed-O 7/8" Steel (Use in Place of 7/8" Aluminum) 1976-Up	1	25513247
44774A	Speed-O Housing, 200/200C (7/8") Aluminum (For Rubber Seal)	1	
54774B	Housing, 200-4R Speed-O (15/16") (Steel)(Rubber Seal Type) 1981-Up	1	
54779B	Bolt, 200-4R Pan to Case 1981-Up	15	
34797B	Nut, 200/200C/200-4R Holds External Shift Lever On 1976-Up	1	
44842	Bracket, 200-4R Holds Small Speed-O Housing In Place 1981-Up	1	
54847A	Gear, 200/200C Speed-O Drive (7 Teeth) Red (1/2" Slot)	1	
54847AB	Gear, 200/200C Speed-O Drive (15 Teeth) Gray (1/2" Slot)	1	
44847B	Gear, 200-4R Speed-O Drive (9 Teeth) Green (5/16" Slot)	1	
44847BD	Gear, 200/200C Speed-O Drive (10 Teeth) Blue (5/16" Slot)	1	
44847C	Gear, 200/200C Speed-O Drive (17 Teeth) Red (7/16" Slot)	1	
44847CA	Gear, 200/200C Speed-O Drive (17 Teeth) Red (5 /16" Slot)	1	
44847DW	Gear, 200/200C Speed-O Drive (18 Teeth) Blue (1/2" Slot)	1	
34848A	Gear, 200/200C Speed-O Driven (34 Teeth) Green (With Plastic Shaft)	1	
44848A	Gear, 200-200C Speed-O Driven (20 Teeth) Blue	1	
54848A	Gear, 200/200C Speed-O Driven (18 Teeth) Brown	1	
44848B	Gear, 200-200C Speed-O Driven (21 Teeth) Red	1	
44848C	Gear, 200-200C Speed-O Driven (22 Teeth) Gray	1	
44848D	Gear, 200-200C Speed-O Driven (23 Teeth) Black	1	
44848E	Gear, 200-200C Speed-O Driven (24 Teeth) Yellow	1	
34848B	Gear, 200/200C Speed-O Driven (35 Teeth) Orange (With Plastic Shaft)	1	
34848C	Gear, 200/200C Speed-O Driven (36 Teeth) White (With Plastic Shaft)	1	
34848D	Gear, 200/200C Speed-O Driven (37 Teeth) Red (With Plastic Shaft)	1	
34848E	Gear, 200/200C Speed-O Driven (38 Teeth) Blue (With Plastic Shaft)	1	
34848F	Gear, 200/200C Speed-O Driven (39 Teeth) Brown (With Plastic Shaft)	1	
34848G	Gear, 200/200C Speed-O Driven (40 Teeth) Black (With Plastic Shaft)	1	
34848H	Gear, 200/200C Speed-O Driven (41 Teeth) Yellow (With Plastic Shaft)	1	
34848HA	Gear, 200/200C Speed-O Driven (42 Teeth) Green (With Plastic Shaft)	1	

© Whatever It Takes Transmission Parts. Inc.

34848J	Gear, 200/200C Speed-O Driven (43 Teeth) Purple (With Plastic Shaft)	1	
34848K	Gear, 200/200C Speed-O Driven (44 Teeth) Gray (With Plastic Shaft)	1	
34848L	Gear, 200/200C Speed-O Driven (45 Teeth) Blue (With Plastic Shaft)	1	
54849A	Clip, 200/200C Speed-O Gear (Short) 1976-Up	1	8628557
54860B	Snap Ring, 200-4R Under 4th Clutch Pack 1981-Up	1	8634029
54861B	Snap Ring, 200-4R Holds 4th Clutch Pressure Plate in Case 1981-Up	1	9634158
54862B	Snap Ring, 200-4R Holds 4th Clutch Retainer to Center Support 1981-Up	1	8634023
54864B	Snap Ring, 200-4R Holds Overrun Clutch in Drum 1981-Up	1	8634056
54865B	Snap Ring, 200-4R Holds Overdrive Sprag Inner Race to Overrun Drum 1981-Up	1	8634274
54867B	Snap Ring, 200-4R Holds Overdrive Planet Pins in Planet 1981-Up	1	8634143
54874A	Snap Ring, 200 Servo Rod Retainer 1976-79	1	9414874
54874AA	Snap Ring, 200C Servo Rod Retainer 1980-Up	1	8628122
54876A	Snap Ring, 200/200C/200-4R Holds Pressure Plate in Forward Drum 1976-Up	1	8628089
54877A	Snap Ring, 200/200C/200-4R Holds Spring & Retainer in Forward Drum 1976-Up	1	8628153
54878A	Snap Ring, 200/200C/200-4R Holds Pressure Plate in Direct Drum (Use 54876A)	1	8628089
54879A	Snap Ring, 200/200C/200-4R Holds Retainer in Direct Drum 1976-Up	1	8628059
54880B	Snap Ring, 200-4R Holds Overdrive Planet to Turbine Shaft 1981-Up	1	8634039
54883A	Snap Ring, 200/200C/200-4R Holds Low/Reverse Clutch Housing to Case 1976-Up	1	8628210
54884A	Snap Ring, 200/200C/200-4R Holds Shell to Sun Gear 1976-Up	1	8623105
44887	Snap Ring, 200/200C/200-4R Speed-O Housing to Seal 1976-Up	1	
54892A	Snap Ring, 200/200C/200-4R Holds Low/Reverse Pressure Plate to Case 1976-Up	1	8628184
54893A	Snap Ring, 200/200C/200-4R Holds Low/Reverse Clutch Retainer in 1976-Up	1	8628404
54894A	Snap Ring, 200/200C/200-4R Holds Front Planet to Output Shaft 1976-Up	1	8628170
54896A	Snap Ring, 200/200C/200-4R Holds Servo Cover in Case 1976-Up	1	8657213
54897A	Snap Ring, 200/200C Holds Governor Cover in Case 1976-Up	1	8628244
54905A	Servo Assembly, 200 1976-78	1	8678942
54905AA	Servo Assembly, 200C/200-4R 1979-Up	1	
54905B	Servo Assembly, 200-4R (Hi-Performance)(Non-Anodized Cover)(Sonnax)	1	
S54905B-9K	Seal Kit, 200-4R Servo (For S54904B) (Sonnax)	1	
54906A	Spring, 200/200C/200-4R Intermediate Servo (Inner) 1976-Up	1	8632147
54907A	Piston, 200/200C Intermediate Servo W/Seal 1.93"OD (Inner) 1976-Up	1	8632980
S54907AF	Nylon Bushing, 200/200C Intermediate (Stops Leaks & Band Failure)(Sonnax)(15 Per Kit)	1	6578-01
54907B	Piston, 200-4R Intermediate Servo W/Seal 2.25"OD (Inner) 1981-Up	1	8678935
54907BB	Piston, 200-4R Intermediate Servo W/O-Ring (Inner) 1981-Up	1	8678941
54907BS	Super Servo, 200-4R (Superior)	1	
T54908A	Pin, 200/200C/200-4R Servo (Extendo Pin)(Teckpak)	1	
54908AA	Pin, 200/200C/200-4R Servo (1 Ring) 1976-Up	1	8630125
54908AB	Pin, 200/200C/200-4R Servo (2 Ring) 1976-Up	1	8630126
54908AC	Pin, 200/200C/200-4R Servo (3 Ring) 1976-Up	1	8630127
54908AD	Pin, 200/200C/200-4R Servo (1 Wide Band) 1976-Up	1	8630128
54909A	Cover, 200/200C Servo 2.374"OD 1976-Up	1	8628939
54909AA	Cover, 200/200C Servo 2.421"OD 1976-Up	1	8628989
54909AB	Cover, 200/200C Servo 2.561"OD 1976-Up	1	8691900
54909AC	Cover, 200/200C Servo 2.789"OD 1976-Up	1	8632902
54909B	Cover, 200-4R Servo 1981-Up	1	8678932
54909BA	Piston, 200-4R Intermediate Servo (Outer) 1981-Up	1	8678934
54911A	Spring, 200/200C/200-4R Intermediate Servo Cushion (Purple) 1976-Up	1	8628109
54911AA	Spring, 200/200C/200-4R Intermediate Servo Cushion (No Color) 1976-Up	1	8628110
54911AB	Spring, 200/200C/200-4R Intermediate Servo Cushion (Blue) 1976-Up	1	8628114
54911AC	Spring, 200/200C/200-4R Intermediate Servo Cushion (White) 1976-Up	1	8630117
54911B	Spring, 200-4R Intermediate Servo Cushion 1981-Up	1	8639264
54912A	Piston, 200 Intermediate Servo (Outer)(Uses 2.89"OD Ring) 1976-78	1	8628950
54912AB	Piston, 200/200C/200-4R Intermediate Servo (Outer)(W/Seal) 1979-Up	1	8638937
54912AC	Piston, 200 Intermediate Servo (Outer)(Uses 2.35"OD Ring) 1979-Up	1	8678943
54912AD	Piston, 200 Intermediate Servo (Outer)(Uses 2.54"OD Ring) 1976-78	1	8638935
54912AE	Piston, 200 Intermediate Servo (Outer)(Uses 2.67"OD Ring) 1976-78	1	8638936
54912B	Piston, 200/200C/200-4R Intermediate Servo (Outer)(Uses 2.67"OD Ring) 1979-Up	1	8638941
54916B	Band Anchor, 200/200C/200-4R 1976-81	1	8634159
54919A	Shim, 200/200C/200-4R Front Servo Pin (To Adjust Band) 1976-81	1	
54925A	Accumulator Assembly, 200/200C 1-2 Accumulator 1976-Up	1	8678941
54925B	Accumulator Assembly, 200-4R 1-2 Accumulator 1981-Up	1	
54926A	Spring, 200/200C 1-2 Accumulator (Purple) 1976-Up	1	8634391
54926AA	Spring, 200/200C 1-2 Accumulator (No Color) 1976-Up	1	8628276
54926B	Spring, 200-4R 1-2 Accumulator (White)(1.650"OD)(2.470"Long)(.135"OD Wire) 1981-Up	1	8657012
54926BA	Spring, 200-4R 1-2 Accumulator (Plain)(1.645"OD)(1.635"Long)(.142"OD Wire) 1981-Up	1	
54927A	Piston, 200/200C 1-2 Accumulator 1976-Up	1	8628318
54927B	Piston, 200-4R 1-2 Accumulator 1981-Up	1	8634923
S74927K	Piston Kit, 200-4R 3-4 Accumulator (With Seals And Balls)(Pinless) (Sonnax)	1	
54929B	Housing, 200-4R 1-2 Accumulator 1981-Up	1	8678913
54937B	Piston, 200-4R 3-4 Accumulator 1981-Up	1	8634956

© Whatever It Takes Transmission Parts. Inc.

PART #	HARD PARTS (Continued)	QTY.	REFERENCE #
54938B	Pin, 200-4R 3-4 Accumulator 1981-Up	1	
54960B	Piston, 200-4R 4th Clutch 1981-Up	1	
54961B	Piston, 200-4R Overrun Clutch 1981-Up	1	8635028
54964A	Piston, 200/200C/200-4R Forward Drum (Steel) 1976-Up	1	8628971
54964AA	Piston, 200/200C/200-4R Forward Drum (Aluminum) 1976-Up	1	
54964BB	Piston, 200-4R Forward Drum (Aluminum) 1981-Up	1	
54965A	Piston, 200/200C/200-4R Direct Clutch 1976-Up	1	8678931
54967A	Piston, 200/200C/200-4R Low/Reverse Clutch 1976-Up	1	8678938
54970B	Springs W/Retainer, 200-4R 4th Clutch Return 1981-Up	1	
54971B	Wave Spring, 200-4R Overrun Clutch Return 1981-Up	1	
54974A	Springs W/Retainer, 200/200C/200-4R Forward Clutch Return 1976-Up	1	8628492
54975A	Springs W/Retainer, 200/200C/200-4R Direct Clutch Return 1976-Up	1	8630096
54977A	Return Spring, 200/200C/200-4R Low/Reverse Clutch 1976-Up	1	8628222
54981B	Retainer, 200-4R Overrun Spring	1	
54985A	Spring Guide, 200/200C/200-4R Direct Clutch Return 1976-Up	1	8630195
54987A	Spring Retainer, 200/200C/200-4R Low/Reverse Clutch 1976-Up	1	8678907
54989A	Retainer, 200/200C/200-4R Inner Servo Spring 1976-Up	1	8632146
54991A	Linkage Assembly, 200/200C Internal 1976-Up	1	
54991A-2	Detent Spring W/Roller, 200 1976-78	1	8628032
54991AA-2	Detent Spring W/Roller, 200C 1979-Up	1	8630460
54991AM-4	Nail, 200/200C Manual Lever Retainer 1976-Up	1	8628480
54991B	Linkage Assembly, 200-4R Internal 1981-Up	1	
54991B-5	Link, 200-4R Rooster Comb to Manual Valve 1981-Up	1	8634326
54991B-7	Clip, 200-4R Rooster Comb to Z Link 1981-Up	1	8634332
34992	Shift Lever, 200/200C External 1976-Up	1	8679990
54995A	Park Pawl Assembly, 200/200C 1976-Up	1	
54995B	Park Pawl Assembly, 200-4R 1981-Up	1	
54997A-3	Spring, 200/200C/200-4R T.V. Wire Lifter 1976-Up	1	8628834
54997A-5	Wire Lifter, 200/200C/200-4R T.V. Bracket to Check Ball 1976-Up	1	8628326
54997A-7	Wire Link, 200 Detent Cable (1.416” Between Bends) 1976-78	1	8628706
54997A-7A	Wire Link, 200 Detent Cable (1.963” Between Bends)(Yellow) 1976-78	1	8630767
54997A-7B	Wire Link, 200C/200-4R Detent Cable 1979-Up	1	8657304
54997BK	T.V. Bracket Assembly, 200/200C/200-4R 1976-Up	1	8648670
54999B	Tube, 200-4R Oil Signal Pipe 1981-Up	1	8634313

© Whatever It Takes Transmission Parts. Inc.

Technical Bulletin #201

If there is a radius in the bottom corner or the pump pocket, it will interfere with the slide operation in the areas shown by the arrows.

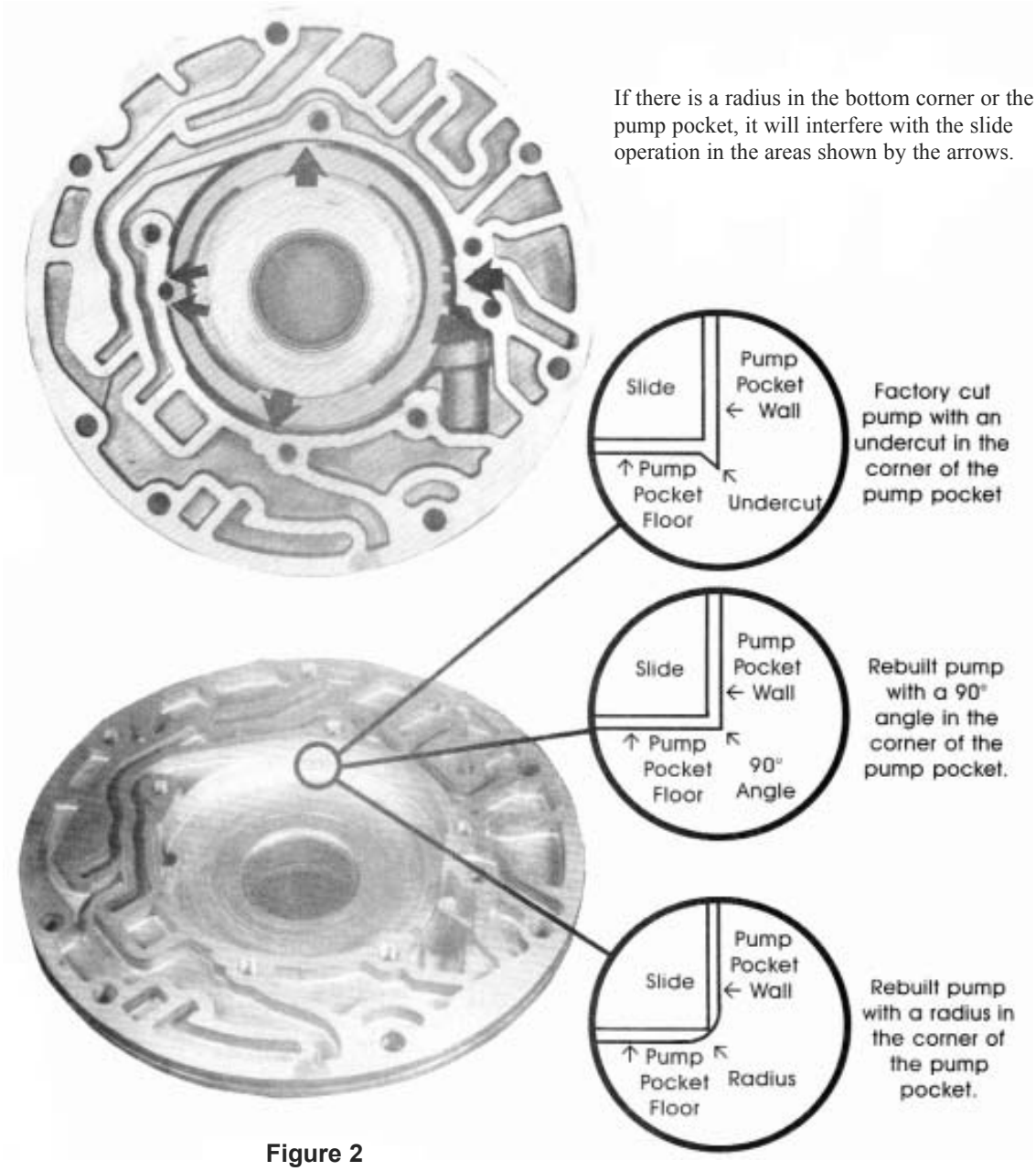

Figure 2

Copyright © 2003 ATRA. All Rights Reserved.

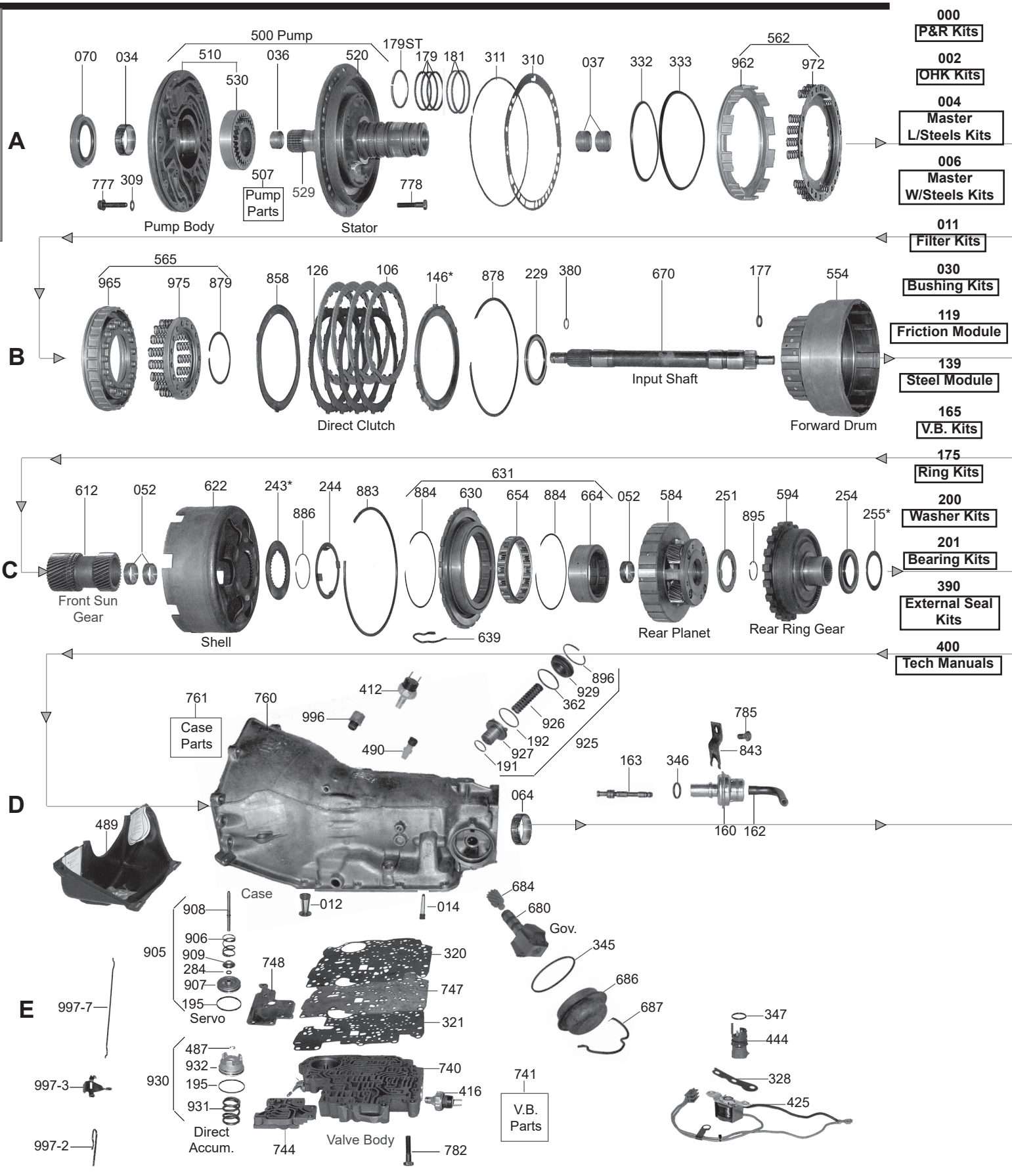

000 P&R Kits
002 OHK Kits
004 Master L/Steels Kits
006 Master W/Steels Kits
011 Filter Kits
030 Bushing Kits
119 Friction Module
139 Steel Module
165 V.B. Kits
175 Ring Kits
200 Washer Kits
201 Bearing Kits
390 External Seal Kits
400 Tech Manuals

© Whatever It Takes Transmission Parts. Inc.

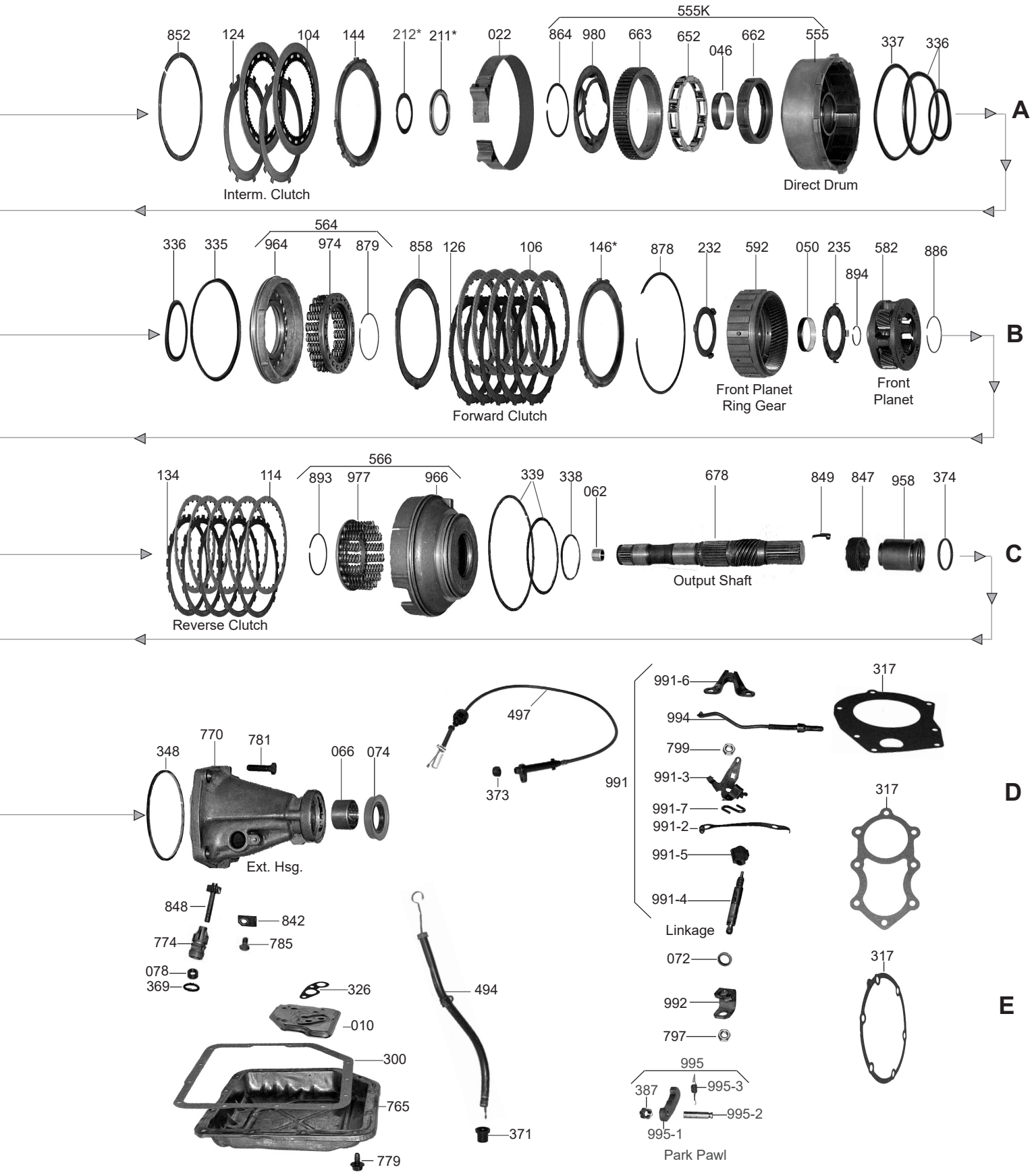

© Whatever It Takes Transmission Parts. Inc.

PART #	PAPER & RUBBER KIT	QTY.	REFERENCE #
44000	Paper & Rubber Kit, 250/350 1969-79	1	
44000B	Paper & Rubber Kit, 250C/350C 1980-86	1	
44000D	Paper & Rubber Kit, 250/250C/350/350C Combo 1969-86	1	

PART #	OVERHAUL KIT	QTY.	REFERENCE #
44002	Overhaul Kit, 250/350 (Short Ring Kit) 1969-79	1	
44002A	Overhaul Kit, 250/350 (Full Ring Kit) 1969-79	1	
44002B	Overhaul Kit, 250C/350C (Short Ring Kit) 1980-86	1	
44002C	Overhaul Kit, 250C/350C (Full Ring Kit) 1980-86	1	
44002D	Overhaul Kit, 250/250C/350/350C Combo (Full Ring Kit) 1969-86	1	

PART #	MASTER L/STEEL KIT	QTY.	REFERENCE #
44004	Master L/Steel Kit, 250/350 (Short Ring Kit) 1969-79	1	
44004A	Master L/Steel Kit, 250/350 (Full Ring Kit) 1969-79	1	
44004B	Master L/Steel Kit, 350C (Short Ring Kit) 1980-86	1	
44004C	Master L/Steel Kit, 350C (Full Ring Kit) 1980-86	1	
44004D	Master L/Steel Kit, 250/350/350C Combo (Full Ring Kit) 1969-86	1	
44004E	Master L/Steels Kit, 250/350/350C Combo (Short Ring Kit) 1969-86	1	
44004H	Master L/Steel Kit, 250C (Full Ring Kit) 1980-86	1	

PART #	MASTER W/STEEL KIT	QTY.	REFERENCE #
44006	Master W/Steel Kit, 250/350 (Short Ring Kit) 1969-79	1	
44006A	Master W/Steel Kit, 250/350 (Full Ring Kit) 1969-79	1	
44006B	Master W/Steel Kit, 350C (Short Ring Kit) 1980-86	1	
44006C	Master W/Steel Kit, 350C (Full Ring Kit) 1980-86	1	
44006D	Master W/Steel Kit, 250/350/350C Combo (Full Ring Kit) 1969-86	1	
44006H	Master W/Steel Kit, 250C (Full Ring Kit) 1980-86	1	

PART #	FILTER	QTY.	REFERENCE #
44010	Filter, 250/250C/350/350C Brass 1969-86	1	8638816
44010A	Filter, 250/250C/350/350C Felt 1969-86	1	8641443
44010B	Filter, 250/250C/350/350C Nylon 1969-86	1	8640848

PART #	FILTER KIT	QTY.	REFERENCE #
44011	Filter Kit, 250/250C/350/350C Brass 1969-86	1	
44011A	Filter Kit, 250/250C/350/350C Felt 1969-86	1	
44011B	Filter Kit, 250/250C/350/350C Nylon 1969-86	1	

PART #	MISC. FILTERS	QTY.	REFERENCE #
44012	Screen, 250/250C/350/350C Pump 1969-86	1	6261323
44014	Screen, 250/250C/350/350C Governor 1969-86	1-2	8642423

PART #	BANDS	QTY.	REFERENCE #
44022	Band, 350/350C 1969-86	1	6261132
44022G	Band, 250/250C (Rigid) 1969-86	1	8641196
44022H	Band, 250/250C (Flex) 1969-86	1	
44022HD	Band, 350/350C (Heavy Duty) 1969-86	1	
44022K	Band, 350/350C (Kevlar) 1969-86	1	

PART #	BUSHINGS	QTY.	REFERENCE #
44030	Bushing Kit, 250/350 1969-79	1	
44030A	Bushing Kit, 250C/350C 1980-86	1	
44034	Bushing, 250/250C/350/350C Pump Body (Babbit) 1969-86	1	8623940
44034D	Bushing, 250/250C/350/350C Pump Body (Enhanced W/CT-101 Dry Lubricant)(W/Indents For Better Oil Retention) 1969-86	1	
44036	Bushing, 250/350 Stator (Front) (Narrow) 1969-79	1	1381366
44036B	Bushing, 250C/350C Stator (Front) 1980-86	1	8641073
44037	Bushing, 250/250C/350/350C Stator (Rear) 1969-86	2	6261022
44046	Bushing, 250/250C/350/350C Direct Drum (Babbit, Narrow) 1969-86	1	
44046B	Bushing, 250/250C/350/350C Direct Drum (Bronze, Narrow) 1969-86	1	8640099

© Whatever It Takes Transmission Parts. Inc.

44046C	Bushing, 250/250C/350/350C Direct Drum (Wide, No Oil Groove) 1969-86	1	
44046CA	Use 106034B	1	
106034B	Bushing, 350 Direct Drum Bushing (Wide With Oil Groove)	1	
44050	Bushing, 250/250C/350/350C Input Ring Gear (Babbit) 1969-86	1	8641117
44052	Bushing, 250/250C/350/350C Sun Gear & Rear Planet 1969-86	3	6261033
44062	Bushing, 250/250C/350/350C Output Shaft 1969-86	1	3789034
44062B	Bushing, 250/250C/350/350C Output Shaft (Long, Heavy Duty) 1969-86	1	
44062C	Bushing, 250/250C/350/350C Output Shaft (Plastic) 1969-86	1	8641058
44064	Bushing, 250/250C/350/350C Case 1969-86	1	8641118
44064B	Bushing, 250/250C/350/350C Governor Bore (Use W/T-107 Tool) 1969-86	1	
44066	Bushing, 250/250C/350/350C Extension Housing (1.500"ID)(Babbit) 1969-86	1	6260048
44066B	Bushing, 250/250C/350/350C Extension Housing (1.500"ID)(Bronze) 1969-86	1	3717682

PART #	METAL CLAD SEALS	QTY.	REFERENCE #
44070	Seal, 250/250C/350/350C Front 1969-86	1	8641826
44072	Seal, 250/250C/350/350C Manual Shaft (.188" Thick)(.755"OD) 1965-Up	1	8623056
44072AK	Seal Kit, 250/250C/350/350C Manual Shaft (Dual Lip)(Contains 5 Seals) 1960-Up	1	
44074	Seal, 250/250C/350/350C Rear (W/Flange, W/Out Boot) 1969-86	1	1243402
44074A	Seal, 250/250C/350/350C Rear (No Flange, W/Out Boot) 1969-86	1	
44074B	Seal, 250/250C/350/350C Rear (W/Flange, W/Long Boot) 1969-86	1	
44074C	Seal, 250/250C/350/350C Rear (W/Flange, W/Short Boot) 1969-86	1	
44074D	Seal, 350 Rear (For 205 Transfer Case)	1	
T44075	Seal, 250/250C/350/350C Drive Shaft Yoke Seal (Teckpak)	1	
T44075K	Yoke Seal Tool Kit & Shaft Yoke Installation Tool (Teckpak)	1	
44078	Seal, 250/250C/350/350C Speed-O Shaft (Metal Clad) 1969-86	1	
44078A	Seal, 250/250C/350/350C Speed-O Shaft (Rubber, W/Spring) 1969-86	1	255119078
44078X	Seal, 250/250C/350/350C Speed-O Shaft (Rubber, W/Out Spring) 1969-86	1	1240382

PART #	FRICTION CLUTCH	QTY.	REFERENCE #
44104	Friction, 350/350C Intermediate Clutch .098" 1969-86	2-3	8647522
44104C	Friction, 350/350C Intermediate Clutch (.098") 1969-86 (Graphite)	2-3	
44104HP	Friction, 350/350C Intermediate Clutch .098" (Hi-Perf.) 1969-86	2-3	
44104HPK	Friction Kit, 350/350C Intermediate Clutch .098" (Hi-Perf.)(3 Per Kit) 1969-86	1	
44104S1	Friction, 350/350C Intermediate Clutch (.098") (Stage 1) 1969-86	2-3	
44106	Friction, 250/350/350C Forward & Direct Clutch .098" 1969-86	7-9	6261278
44106B	Friction, 250C Forward & Direct Clutch .088" 1980-86	7-9	
44106C	Friction, 350/350C Forward & Direct Clutch (.098") 1969-86 (Graphite)	7-9	
44106HP	Friction, 350/350C Forward & Direct Clutch .098" (Hi-Perf.) 1969-86	7-9	
44106HPK	Friction Kit, 350/350C Forward & Direct Clutch .098" (Hi-Perf.)(9 Per Kit) 1969-86	1	
44106S1	Friction, 250/350/350C Forward & Direct (.098") (Stage 1) 1969-86	7-9	
44114	Friction, 250/350/350C Low/Reverse Clutch .098" 1969-86	4-5	8641512
74114	Friction, 250C Low/Reverse Clutch .087" 1980-86	4-5	
44114HP	Friction, 350/350C Low/Reverse Clutch .098" (Hi-Perf.) 1969-86	4-5	
44114HPK	Friction Kit, 350/350C Low/Reverse Clutch .098" (Hi-Perf.)(5 Per Kit) 1969-86	1	
44114S1	Friction, 250/350/350C Low/Reverse Clutch (.098")(Stage 1) 1960-86	4-5	
44119	Friction Module, 250/350/350C 1969-86	1	
44119H	Friction Module, 250C 1980-86	1	
44119HP	Friction Module, 350/350C (HI Performance Indy Reds) 1969-86	1	
44119S1	Friction Module, 350/350C (Stage 1) 1969-86	1	

PART #	STEEL CLUTCH	QTY.	REFERENCE #
44124	Steel, 350/350C Intermediate Clutch .068" 1969-86	2-3	8640672
44124AX	Steel, 350/350C Intermediate Clutch .078" (Oversize) 1969-86	AR	
44124HP	Steel, 350/350C Intermediate Clutch .068" (Kolene) 1969-86	2-3	8640672K
44124X	Steel, 350/350C Intermediate Clutch .079" (Oversize) 1969-86	AR	
44126	Steel, 250/250C/350/350C Forward & Direct Clutch .068" 1969-86	7-9	6261071
44126HP	Steel, 250/250C/350/350C Forward & Direct Clutch .068" (Kolene) 1969-86	7-9	6261071K
44126HPK	Steel Kit, 250/250C/350/350C Forward & Direct Clutch .068" (Kolene) 1969-86 (9 Per Kit)	1	
44126X	Steel, 250/250C/350/350C Forward & Direct Clutch .090" (Oversize) 1969-86	AR	
44134	Steel, 250/250C/350/350C Low/Reverse Clutch .068" 1969-86	4-5	6261120
44134HP	Steel, 250/250C/350/350C Low/Reverse Clutch .068" (Kolene) 1969-86	4-5	6261120K
44134X	Steel, 250/250C/350/350C Low/Reverse Clutch .080" (Oversize) 1969-86	AR	
44139	Steel Module, 250/350/350C 1969-86	1	
44139H	Steel Module, 250C 1980-86	1	

© Whatever It Takes Transmission Parts. Inc.

PART #	CLUTCH PRESSURE PLATES	QTY.	REFERENCE #
44144	Pressure Plate, 350/350C Intermediate Clutch 1969-86	1	8640673
44146	Pressure Plate, 250/250C/350/350C Forward & Direct Clutch .245"-.255" 1969-86	1-2	6261072
44146A	Pressure Plate, 250/250C/350/350C Forward & Direct Clutch .275"-.285" 1969-86	1-2	6261349
44146B	Pressure Plate, 250/250C/350/350C Forward & Direct Clutch .310" 1969-86	1-2	6261350

PART #	VACUUM MODULATORS	QTY.	REFERENCE #
44160B	Modulator, 250/250C/350/350C Black/Red Stripe 1969-86	1	3035518
44160D	Modulator, 250/250C/350/350C Dual Red Stripe 1969-86	1	
44160R	Modulator, 250/250C/350/350C Single Red Stripe 1969-86	1	3035519
84160R	Modulator, 250/250C/350/350C Universal Dual Red Stripe 1969-86	1	8646956
44160X	Modulator, 250/250C/350/350C Large Can Black (Can Use 44160R) 1969-86	1	
44161	Spring, 250/250C/350/350C Modulator Valve to Case (Lowers Upshift Speeds) 1969-86	1	
44162	Hose, 250/250C/350/350C Modulator (Elbow) 1969-86	1	C1AZ-7B087-E
44163	Valve, 250/250C/350/350C Under Modulator 1969-86	1	

PART #	VALVE BODY KITS	QTY.	REFERENCE #
S44165	Valve Body Kit, 350 1969-79 (Superior)	1	K350
T44165	Valve Body Kit, 350/350C 1969-86 (With Plate) (Transgo)	1	SK350
S44165P	Valve Body Kit, 350 (Hi-Perf.) 1969-79 (Superior)	1	K350-HP
A44169	Valve Body Kit, 350 (2 Stage Pac) 1969-79 (Fairbanks)	1	31001-2
T44171	Reprogramming Kit, 350 (Heavy Duty & Competition) 1969-79 (Transgo)	1	350-1&2
T44171A	Reprogramming Kit, 350C (Heavy Duty & Competition) 1980-86 (Transgo)	1	350C-1&2
T44173	Reprogramming Kit, 350 (Competition Stick Shift) 1969-79 (Transgo)	1	350-3

PART #	OIL SEALING RINGS	QTY.	REFERENCE #
44175	Ring Kit, 250/250C/350/350C Short (Pump Rings Only)(Metal) 1969-86	1	
44175A	Ring Kit, 350/350C Full (Metal) 1969-86	1	
44175AA	Ring Kit, 350 Full (Metal) 1969-73	1	
44175B	Ring Kit, 350/350C Full (Metal) 1974-86	1	
44175BC	Ring Kit, 350/350C Full (Metal & Teflon) 1969-86	1	
44175BT	Ring Kit, 350/350C Full (Teflon) 1969-86	1	
44175H	Ring Kit, 250C Full (Metal) 1980-84	1	
44175T	Ring Kit, 250/250C/350/350C Short (Pump Rings Only)(Teflon) 1969-86	1	
44177T	Ring, 250/250C/350/350C Input Shaft (Teflon) 1969-86	1	8640186
44179	Ring, 250/250C/350/350C Stator (Direct Clutch)(Metal) 1969-86	3	6261746
44179A	Ring, 250/250C/350/350C Stator (Direct Clutch) Metal 1969-86 (Chamfered On The Outside Diameter)	3	
44179ST	Ring, 250/250C/350/350C Stator (Support For Direct Clutch)(Teflon) 1969-86	1	
44179T	Ring, 250/250C/350/350C Stator (Direct Clutch)(Teflon) 1969-86	3	8640468
44181	Ring, 250/250C/350/350C Stator (Forward Clutch)(Metal) 1969-86	2	6261570
44181T	Ring, 250/250C/350/350C Stator (Forward Clutch)(Teflon) 1969-86	2	8640469
44191	Ring, 350/350C Intermediate Accumulator Piston (Inner)(Metal) 1969-86	1	6261138
44191T	Ring, 350/350C Intermediate Accumulator Piston (Inner)(Teflon) 1969-86	1	6260257
S44191UTK	Ring Set, 350/350C Intermediate Accumulator Piston (10 Inner/10 Outer Rings) (Teflon)(Sonnax)	1	35719-SK
44192	Ring, 350 Intermediate Accumulator Piston (Outer)(.090"Wide)(Metal) 1969-73	1	6261139
44192A	Ring, 350/350C Intermediate Accumulator Piston (Outer)(.052"Wide)(Metal) 1974-86	1	6260258
44192T	Ring, 350/350C Intermediate Accumulator Piston (Outer)(Teflon) 1974-86	1	
44195	Ring, 350 Intermediate Servo 1969-73	1	6261151
44195A	Ring, 350 Intermediate Servo (Replaces Teflon)(Metal) 1974-79	1	6260320
44195B	Ring, 350 Intermediate Servo (Early, Metal) 1969-73	1	
44195C	Ring, 250/250C Servo Apply (1.986"OD)(Metal) 1969-86	1	8641472
44195T	Ring, 350/350C Intermediate Servo (Teflon) 1969-86	1	

PART #	WASHERS & BEARINGS	QTY.	REFERENCE #
44200	Washer Kit, 250/350 (W/44211,A,B & 2 Shims) 1969-79	1	
44200B	Washer Kit, 250C/350C (W/44211,A,B, 44232A & 2 Shims) 1980-86	1	
44200F	Washer Kit, 250/250C/350/350C Pump Shim Kit (6 Shims) 1969-86	1	
44200R	Washer Kit, 250/250C/350/350C Pump Shim Kit (4 Shims) 1969-86	1	
44201A	Bearing Kit, 250/250C/350/350C 1969-86	1	
44211	Washer, 250/250C/350/350C Stator .066" (# 1) 1969-86	1	6261015
44211A	Washer, 250/250C/350/350C Stator .083" (# 2) 1969-86	1	6261013
44211B	Washer, 250/250C/350/350C Stator .100" (# 3) 1969-86	1	6261014
44211C	Bearing, 250/250C/350/350C Stator 1969-86	1	9436851

© Whatever It Takes Transmission Parts. Inc.

44212A	Shim, 250/250C/350/350C Stator .010” (# 1) 1969-86	AR	
44212B	Shim, 250/250C/350/350C Stator .015” (# 2) 1969-86	AR	
44212C	Shim, 250/250C/350/350C Stator .020” (# 3) 1969-86	AR	
44212D	Shim, 250/250C/350/350C Stator .025” (# 4) 1969-86	AR	
44212E	Shim, 250/250C/350/350C Stator .030” (# 5) 1969-86	AR	
44212F	Shim, 250/250C/350/350C Stator .035” (# 6) 1969-86	AR	
44229	Bearing, 250/250C/350/350C Direct Drum to Forward Drum 1969-86	1	8641936
44232	Washer, 250/250C/350/350C Forward Drum to Hub (Metal) 1969-86	1	6261027
44232A	Washer, 250/250C/350/350C Forward Drum to Hub (Plastic) 1969-86	1	8640060
44235	Washer, 250/250C/350/350C Front Planet to Hub 1969-86	1	6260374
44235A	Bearing, 250/250C/350/350C Front Planet to Hub 1969-86	1	9436852
44243	Race, 350 Sun Shell (Rear)(.105” Thick) 1969	1	
44243A	Race, 250/250C/350/350C Sun Shell (Rear)(.210” Thick) 1970-86	1	6261034
44244	Washer, 250/250C/350/350C Sun Shell to Inner Race (Metal) 1969-86	1	6261184
44244A	Washer, 250/250C/350/350C Sun Shell to Inner Race (Plastic) 1969-86	1	8642331
44251	Washer, 250/250C/350/350C Rear Planet to Support 1969-86	1	6261124
44251A	Bearing, 250/250C/350/350C Rear Planet to Support 1969-86	1	1256852
44254	Bearing, 250/250C/350/350C Rear Ring Gear to Case 1969-86	1	8640228
44255	Shim, 250/250C/350/350C Rear .010” (# 1) 1969-86	AR	
44255A	Shim, 250/250C/350/350C Rear .020” (# 2) 1969-86	AR	
44255B	Shim, 250/250C/350/350C Rear .030” (# 3) 1969-86	AR	
44255C	Shim, 250/250C/350/350C Rear .035” (# 4) 1969-86	AR	
44255D	Shim, 250/250C/350/350C Rear .040” (# 5) 1969-86	AR	
44255E	Shim, 250/250C/350/350C Rear .045” (# 6) 1969-86	AR	
44255K	Shim Kit, 250/250C/350/350C Rear .010” 1969-86 (10 Per Kit)(Sonnax)	1	77406-10

PART #	GASKETS & RUBBER COMPONENTS	QTY.	REFERENCE #
44300	Gasket, 250/250C/350/350C Pan 1969-86	1	6261649
44309	Gasket, 250/250C/350/350C Pump Bolt Washer 1969-86	8	3884683
44310	Gasket, 250/250C/350/350C Pump 1969-86	1	8640671
44311	O-Ring, 250/250C/350/350C Pump 1969-86	1	6261413
M301317A	Gasket, 350/350C Extension Housing (Adapter) to 203 Transfer Case 1973-80	1	
M302317A	Gasket, 350/350C Extension Housing (Adapter) to 205 Transfer Case 1969-86	1	
M304317B	Gasket, 350C Extension Housing (Adapter) to 208 Transfer Case 1981-86	1	
44320	Gasket, 250/350 Upper Valve Body 1969-79	1	330189
44320A	Gasket, 250C/350C Upper Valve Body 1980-86	1	8641470
44321	Gasket, 250/350 Lower Valve Body 1969-79	1	330190
44321A	Gasket, 250C/350C Lower Valve Body 1980-86	1	8641421
44326	Gasket, 250/250C/350/350C Filter 1969-86	1	6261235
44328	Gasket, 250C/350C Solenoid 1980-86	1	8641824
44332	Lip Seal, 350/350C Intermediate Clutch (Inner) 1969-86	1	6261079
44332K	Lip Seal Set, 350/350C Intermediate Clutch 1969-86	1	
44333	Lip Seal, 350/350C Intermediate Clutch (Outer) 1969-86	1	6261080
44334K	Lip Seal Set, 250/250C/350/350C Forward Clutch 1969-86	1	
34335	Lip Seal, 250/250C/350/350C Forward Clutch (Outer) 1969-86	1	8623101
44336	Lip Seal, 250/250C/350/350C Forward & Direct Clutch (Inner) 1969-86	2	6261053
44336C	Lip Seal, 250/250C/350/350C Direct Clutch (Center) 1969-86	1	6261055
44336K	Lip Seal Set, 250/250C/350/350C Direct Clutch 1969-86	1	
44337	Lip Seal, 250/250C/350/350C Direct Clutch (Outer) 1969-86	1	6261054
44338	Lip Seal, 250/250C/350/350C Low/Reverse Clutch (Inner) 1969-86	1	3812830
44338K	Lip Seal Set, 250/250C/350/350C Low/Reverse Clutch 1969-86	1	
44339	Lip Seal, 250/250C/350/350C Low/Reverse Clutch (Outer) 1969-86	1	3812831
44339C	Lip Seal, 250/250C/350/350C Low/Reverse Clutch (Center) 1969-86	1	8637772
44345	O-Ring, 250/250C/350/350C Governor Cover 1969-86	1	1241734
44346	O-Ring, 250/250C/350/350C Modulator (Use 103368) 1969-86	1	
44347	O-Ring, 250C/350C Electrical Connector (Use 103368) 1969-86	1	
44348	O-Ring, 250/250C/350/350C Extension Housing 1969-86	1	1358899
44362	O-Ring, 350/350C Intermediate Accumulator Cover (For Steel Cover) 1969-86	1	338926
44362A	O-Ring, 350/350C Intermediate Accumulator Cover (Small)(For Aluminum Cover) 1969-86	1	
103368	O-Ring, 250/250C/350/350C Modulator, Speed-O Housing, & Electrical Conn. 1969-86	3	
44368	O-Ring, 250/250C/350/350C Speed-O Housing (1.750”OD)(Black) 1969-86	1	6264904
44369	O-Ring, 250/250C/350/350C Speed-O Housing (2.000”OD)(Black) 1969-86	1	1359319
44369A	O-Ring, 250/250C/350/350C Speed-O Housing (2.000”OD)(Purple) 1969-86	1	25501478
44369B	O-Ring, 250/250C/350/350C Speed-O Housing (.750”OD)(Use 103368) 1969-86	1	

© Whatever It Takes Transmission Parts. Inc.

PART #	GASKETS & RUBBER COMPONENTS (Continued)	QTY.	REFERENCE #
44371A	O-Ring, 250/350 Filler Tube 1969-79	1	6264902
44371B	Boot, 250C/350C Filler Tube 1980-86	1	1259475
44371BA	Boot, 250C/350C Filler Tube With Outer Grooves 1980-86	1	
44373A	O-Ring, 250/350 Detent Cable 1969-79	1	6264901
44373B	Boot, 250C/350C Detent Cable 1980-86	1	1262475
44374	Seal, 350/350C to 203/205/208 Spline Seal 1969-86	1	
44374B	O-Ring, 250/250C/350/350C Output Shaft Yoke Sleeve to Yoke 1969-86	1	
44376	O-Ring, 350C Solenoid to Valve Body 1980-86	1	
44380	O-Ring, 250C/350C Input Shaft (Pilot) 1980-86	1	8630049
44387	Gasket, 250/250C/350/350C Drain Plug 1969-86	1	
44390	External Seal Kit, 250/250C/350/350C W/Pan Gasket 1969-86	1	

PART #	TECHNICAL MANUALS	QTY.	REFERENCE #
44400	Tech Manual, 350/350C	1	
44401	Tech Manual On CD, 350/350C	1	

PART #	ELECTRICAL COMPONENTS	QTY.	REFERENCE #
44412	Switch, 350C 3rd Clutch Pressure 1980-86	1	14035121
44416	Switch, 250C/350C Governor 34 PSI 1980-86	1	8648060
44416A	Switch, 250C/350C Governor 40 PSI 1980-86	1	8648062
44416AA	Switch, 250C/350C Governor 44 PSI 1980-86	1	
44416B	Switch, 250C/350C Governor 46 PSI 1980-86	1	8648063
44416C	Switch, 250C/350C Governor 48 PSI 1980-86	1	8648064
44416D	Switch, 250C/350C Governor 50 PSI 1980-86	1	8648065
44416DA	Switch, 250C/350C Governor 52 PSI 1980-86	1	8648066
44416E	Switch, 250C/350C Governor 54 PSI 1980-86	1	8648067
44416G	Switch, 250C/350C Governor (Non-Grounding) 1980-86	1	
44416X	Switch, 250/250C/350/350C Spark Control 1 Prong 1969-86	1	6462514
44416Y	Switch, 250/250C/350/350C Spark Control 3 Prong 1969-86	1	3996287
44416Z	Switch, 250/250C/350/350C Spark Control 2 Prong 1969-86	1	6462549
44425	Solenoid, 250C/350C TCC (Universal) 1980-86	1	1997588
44425A	Solenoid, 250C/350C TCC 1980-86	1	1997585
44425B	Solenoid, 350C TCC (4 Wire) 1980-86	1	1997583
44425C	Solenoid, 350C TCC (3 Wire) 1980-86	1	1997584
44425D	Solenoid, 350C TCC 1980-86	1	1997592
44425E	Solenoid, 350C TCC (2 Wire, Closed Loop) 1980-86	1	1997590
44425G	Solenoid, 350C TCC (4 Wire) 1980-86	1	1997587
44425H	Solenoid, 350C TCC (W/ECM & 3rd Pressure Switch) 1980-86	1	
44434	Switch, 350C TCC (Diesel) 1980-86	1	22507713
44442A	Universal Adjustment Vaccum Switch, 350C (1” to 6” Of Vaccum)(Superior)	1	
44442B	Universal Adjustment Vaccum Switch, 350C (6” to 22” Of Vaccum)(Superior)	1	
74444	Connector, 250C/350C Case (2 Prong) 1980-86	1	12300205
74444A	Connector, 250C/350C Case (3 Prong) 1980-86	1	
84444	Connector, 350C Case (4 Prong) Square	1	
44445	Wire Harness, 350C External (2 Wire) 1980-86	1	
44449	Ground Strap, 250/250C/350/350C 14” Long 1969-86	1	
44449A	Ground Strap, 250/250C/350/350C 42” Long 1969-86	1	

PART #	MISC. COMPONENTS	QTY.	REFERENCE #
74483B	Cup Plug, 350/350C Park Pawl Shaft	1	
44487	E-Clip, GM	2	
54487A	Grommet, Some 350/350C Shift Lever (Black, Oval) 1976-Up	1	
44487B	Grommet, GM Linkage (Round, Plastic)	1	
44487C	M Hitch Pins	1	
44487D	Plastic T (3 Way) (3/16”)	AR	
44487E	Plastic T (3 Way) (1/4”)	AR	
44487F	Plastic T (3 Way) (5/16”)	AR	
T44489	Dust Cover, 350 Universal (Teckpak) 1969-86	1	K35908U
44490	Vent Tube, GM Plastic	1	8640496
44494	Filler Tube & Dip Stick, 350 (OE Style) 1969-86	1	
44494D	Filler Tube Repair Kit, 350 1969-86	1	
T44494R	Filler Tube Repair End, 350 (Techpak)	1	K35999RB
T44494U	Filler Tube & Dip Stick, 350 (Fitz All) 1969-86 (Teckpak)	1	K35999U
T44494UL	Filler Tube & Dip Stick, 350 (Fitz All) With Lockdown Stick 1969-86 (Teckpak)	1	
44497	Detent Cable, 250/250C/350/350C (43” Wire) 1969-86	1	

© Whatever It Takes Transmission Parts. Inc.

44497A	Detent Cable, 250/250C/350/350C (40 1/2" Wire)	1	
S44497-1	Detent Cable Corrector Kit, 250/250C/350/350C Teardrop Style Connector 1969-86 (Sonnax)	1	
T44497B-1	Detent Cable Repair End, Teardrop Style Connector-Bulk (With Slot) (Teckpak)	1	
44497BC-1	Repair End, 350 Detent Cable & 250 Conversion End	1	
S74497CR-1	TV Cable Rebuild Kit, 350 (Cable With Ends)(Customer Uses His Housing) (Sonnax)	1	
74497E-4	Linkage Plate, 350 TV Bracket For Edelbrock Carburator	1	
74497H-4	Linkage Plate, 350 TV Bracket For Holley Carburator	1	
T44497U	Detent Cable, 250/250C/350/350C Universal 1969-86 (Teckpak)	1	
T44497UA	Detent Cable, 250/250C/350/350C Self Adjusting Universal 1969-86 (Teckpak)	1	

PART #	HARD PARTS	QTY.	REFERENCE #
44500	Pump, 350 Washer Type 1969-79	1	6264919
44500A	Pump, 350 Bearing Type (W/5 Ring Stator) 1969-79	1	
44500B	Pump, 350 Bearing Type (W/6 Ring Stator) 1969-79	1	
44500C	Pump, 350C 1980-86	1	
44500D	Pump, 250 1969-79	1	
44500E	Pump, 250C 1980-86	1	
44510	Pump Body, 350 1969 Only	1	
44510A	Pump Body, 350 L1969-79	1	8641911
44510B	Pump Body, 350 (Uses Lock-Up Gears) L1969-79	1	
44510C	Pump Body, 250C/350C 1980-86	1	8641590
44510D	Pump Body, 250 1969-79	1	
44520	Stator, 350 Washer Type 1969-79	1	14033581
44520A	Stator, 350 Bearing Type (5 Rings) 1969-79	1	
44520B	Stator, 350 Bearing Type (6 Rings) 1969-79	1	
44520C	Stator, 350C 1980-86	1	14022147
44520D	Stator, 250 1969-79	1	
44520E	Stator, 250C 1980-86	1	

PART #	PUMP COMPONENTS	QTY	REFERENCE #
44530A	Pump Gear Set, 250/350 (.721" Thick) 1969-79	1	
44530AA	Pump Gear Set, 250/350 (.723" Thick) 1969-79	1	
44530AB	Pump Gear Set, 250/350 (.725" Thick) 1969-79	1	
44530AC	Pump Gear Set, 250/350 (.727" Thick) 1969-79	1	
44530ACBX	Pump Gear Set, 250/350 (.724" Thick) (Oversized) 1969-79	1	
44530AD	Pump Gear Set, 250C/350C (.841" Thick) 1980-86	1	8641422
44530AE	Pump Gear Set, 250C/350C (.843" Thick) 1980-86	1	8641426
44530AG	Pump Gear Set, 250C/350C (.845" Thick) 1980-86	1	8641429
444530AHX	Pump Gear Set, 250C/350C (.850" Thick) Oversized 1980-86	1	
44540A-3	Spring, 350 Cooler By-Pass Valve 1969	1	
44540A-7	Plunger, 350 Cooler By-Pass Valve 1969	1	

PART #	HARD PARTS (Continued)	QTY	REFERENCE #
44554	Drum, 350/350C Forward Clutch (W/Out Input Shaft) 1969-86	1	360943
44554A	Drum, 250/250C Forward Clutch (W/Out Input Shaft) 1969-86	1	
44555	Drum, 350/350C Direct Clutch (W/Out Sprag) 1969-86	1	8640307
44555A	Drum, 250/250C Direct Clutch (W/Out Sprag) 1969-86	1	14019950
44555K	Drum, 350/350C Direct Clutch (W/Sprag) 1969-86	1	
44562	Piston Kit, 350/350C Intermediate Clutch (3 Clutch Type) 1969-86	1	356826
44564	Piston Kit, 250/250C/350/350C Forward Clutch (5 Clutch Type) 1969-86	1	
44565	Piston Kit, 350/350C Direct Clutch (5 Clutch Type) 1969-86	1	
44565A	Piston Kit, 250/250C/350/350C Direct Clutch (4 Clutch Type) 1969-86	1	
44566	Piston Kit, 250/250C/350/350C Low/Reverse Clutch (5 Clutch Type) 1969-86	1	
44582	Planet, 250/250C/350/350C Front (Washer Type) 1969-86	1	1250023
44582A	Planet, 250/250C/350/350C Front (Bearing Type) 1969-86	1	
44584	Planet, 250/250C/350/350C Rear 1969-86	1	6261645
44592	Ring Gear, 250/250C/350/350C Front Planet (Washer Type) 1969-86	1	6261401
44592A	Ring Gear, 250/250C/350/350C Front Planet (Bearing Type) 1969-86	1	
44594	Ring Gear, 250/250C/350/350C Rear Planet (Washer Type) 1969-86	1	1250022
44594A	Ring Gear, 250/250C/350/350C Rear Planet (Bearing Type) 1969-86	1	
44612	Sun Gear, 250/250C/350/350C 1969-86	1	6260185
44622	Shell, 250/250C/350/350C Sun Gear Driving (.167" Thick Wal) 1969-86	1	1241726
44622A	Shell, 250/250C/350/350C Sun Gear Driving (.116" Thick Wall) 1970-86	1	8641954
44630	Center Support, 250/250C/350/350C Outer Race 1969-86	1	8663094
44631	Center Support Assembly, 250/250C/350/350C 1969-86	1	
74639	Clip, 250/250C/350/350C Center Support (Anti-Clunk Spring) 1969-86	1	6261415

© Whatever It Takes Transmission Parts. Inc.

PART #	SPRAGS & ONE WAY CLUTCHES	QTY.	REFERENCE #
44652	Sprag, 350/350C Intermediate 1969-86	1	7471025
44654	Sprag, 250/250C/350/350C Low/Reverse (Metal) 1969-86	1	7471020
44654A	Sprag, 250/250C/350/350C Low/Reverse (Metal) 1969-86 (36 Element) (Lug Type) (Borg Warner)	1	
44662	Inner Race, 350/350C Intermediate Sprag 1969-86	1	
44663	Outer Race, 350/350C Intermediate Sprag (OE Type) 1969-86	1	6261021
44663HD	Outer Race, 350/350C Intermediate Sprag (Heavy Duty) 1969-86	1	
44664	Inner Race, 250/250C/350/350C Low/Reverse Sprag 1969-86	1	8673300

PART #	HARD PARTS (Continued)	QTY.	REFERENCE #
44670A	Input Shaft, 250/350 (Bushing Type) 1969-79	1	14033579
44670B	Input Shaft, 250/350 (Teflon Ring Type) 1977-79	1	25505774
44670C	Input Shaft, 250C/350C 1980-86	1	14024301
44678	Output Shaft, 250/250C/350/350C 15 1/2” Long 1969-86	1	8641076
44678A	Output Shaft, 250/250C/350/350C 18 1/2” Long 1969-86	1	8641084
44678B	Output Shaft, 250/250C/350/350C 22” Long 1969-86	1	
44678C	Output Shaft, 350 4x4 9 5/8” Long 1969-79	1	8641088
44678D	Output Shaft, 350C 4x4 12” Long 1983-86	1	
44678E	Output Shaft, 350C 4x4 14” Long 1980-82	1	8641440
44680	Governor, 250/250C/350/350C 1969-86	1	464200
44681-4K	Governor Kit, 250/250C/350/350C (Springs & Weights) 1969-86 (Superior)	1	
44684	Gear Kit, 250/250C/350/350C Governor (1.230” Overall Length) 1969-86	1	6261660
44686	Cover, 250/250C/350/350C Governor 1969-86	1	8667827
74687	Retainer, 250/250C/350/350C Governor Cover 1969-86	1	6260040
44740	Valve Body, 350 1969-79	1	
44740A	Valve Body, 350C 1980-86	1	
44740B	Valve Body, 250C 1980-86	1	

PART #	VALVE BODY COMPONENTS	QTY.	REFERENCE #
44741-5	Check Ball 250/205C/350/350C Valve Body .250” (Steel) 1969-86	4	6261179
44741G-5	Check Ball 250/205C/350/350C Valve Body .250” (Torlon) 1969-86	4	
44741M-1	Valve, 350 Manual 1969-79	1	1394763
S44741RK	Reverse Boost Valve Kit, 350 (Valve & Sleeve) 1969-86 (Sonnax)	1	
44741T-1	Valve, 350 Detent Regulator 1969-79	1	6260153
44741V-5	Check Ball 250/205C/350/350C Valve Body .250” (Viton) 1969-86	4	

PART #	HARD PARTS (Continued)	QTY.	REFERENCE #
44744	Aux. Valve Body, 350C 1980-86	1	8641068
44747	Plate, 350 Valve Body 1969-79	1	14008963
44747A	Plate, 350 Valve Body (Stamped E) 1969-79	1	8641418
44747AA	Plate, 350 Valve Body (Stamped UUU) 1969-79	1	8641467
44747B	Plate, 350C Valve Body 1980-86	1	
44748	Support, 350 Valve Body Seperator Plate 1969-79	1	1256695
44748A	Support, 350C Valve Body Seperator Plate 1980-86	1	
44760	Case, 350 Chevy 1969-79	1	
44760A	Case, 350 Buick, Olds, Pontiac 1969-79	1	
44760B	Case, 350 Chevy 4x4 (Uses 6 Bolt Aluminum Dust Cover) 1969-79	1	
44760C	Case, 350C Chevy 4x4 (Uses 6 Bolt Aluminum Dust Cover) 1980-86	1	
44760D	Case, 350 Unibell 1969-79	1	
44760E	Case, 350C Chevy 1980-86	1	
44760EA	Case, 350C Buick, Olds, Pontiac 1980-86	1	
44760G	Case, 350C Unibell 1980-86	1	
44760H	Case, 350 Monza 1969-75	1	
44760J	Case, 250C Unibell 1980-84	1	
44760JA	Case, 250C Chevy 1980-84	1	
44760L	Case, 250C Buick, Olds, Pontiac 1980-84	1	
44760V	Case, 250 Vega 1972-75	1	

PART #	CASE COMPONENTS	QTY.	REFERENCE #
44761A	Case Saver, 250/250C/350/350C (4 Piece Type) 1969-86 (4 Per Kit)	1	
44761B	Case Saver, 250/250C/350/350C (1 Piece Type) 1969-86	1	
44761D	Use 74761DAC	1	K77010S
74761DAC	Case SAver, 350/350C (Center Support Modification)(Contains: Center Support Outer Race (Wide Sprag Type), Retainer Plate, & 6 Allen Head Screws)(Adapt-A-Case)	1	

© Whatever It Takes Transmission Parts. Inc.

PART #	HARD PARTS (Continued)	QTY.	REFERENCE #
44765	Pan, 250/250C/350/350C W/Out Drain Plug 1969-86	1	8641376
44765A	Pan, 250/250C/350/350C W/Drain Plug 1969-86	1	8641537
44765HP	Pan, 250/250C/350/350C (Deep Aluminum With Spacer & Bolts)(High Performance)	1	
44770	Extension Housing, 250/250C/350/350C 2wd 6” Long (W/2” Speed-O Hole) 1969-86	1	
44770A	Extension Housing, 250/250C/350/350C 2wd 6” Long (W/7/8” Speed-O Hole) 1969-86	1	
44770B	Extension Housing, 350/350C 2wd 6” Long (W/7/8” Speed-O Hole)(W/2 Mounting Holes For Differential Support Bracket)(To Change 200 to 350)	1	
44770C	Extension Housing, 250/250C/350/350C 2wd 9” Long (W/7/8” Speed-O Hole) 1969-86	1	
44770D	Extension Housing, 350/350C 2wd 12 1/4” Long (W/2” Speed-O Hole) 1969-86	1	
44770E	Extension Housing, 350/350C 2wd 12 1/4” Long (W/7/8” Speed-O Hole) 1969-86	1	
44770G	Extension Housing, 350/350C 4x4 (Fits 208 Transfer Case) 1969-86	1	
44770H	Extension Housing, 350/350C 4x4 (Fits 203 Transfer Case) 1973-80	1	
44770J	Extension Housing, 350/350C 4x4 (Fits 205 Transfer Case) 1969-80	1	
44774	Speed-O Housing, 250/250C/350/350C 7/8” Steel (For Metal Clad Seal) 1969-70	1	25513247
44774A	Speed-O Housing, 250/250C/350/350C 7/8” Aluminum (For Rubber Seal) 1970-86	1	345215
44774B	Speed-O Housing, 250/350 2” Aluminum (For 36T-39T Plastic Shaft Gear) 1969-79	1	
44774BA	Speed-O Housing, 250C/350C 2” Plastic (For 34T-39T Plastic Shaft Gear) 1980-86	1	
44774BAHD	Speed-O Housing, 250C/350C (2” Aluminum)(.315”ID Bore)(For 34-39 Teeth Plastic Shaft Gear) 1980-86	1	
44774C	Speed-O Housing, 250C/350C 2” Plastic (For 40T-45T Plastic Shaft Gear) 1980-86	1	
44774CA	Speed-O Housing, 250/350 2” Aluminum (For 40T-43T Plastic Shaft Gear) 1969-79	1	
44774CHD	Speed-O Housing, 250C/350C (2” Aluminum)(.338”ID Bore)(For 40-45 Teeth Plastic Shaft Gear) 1969-86 (The Gear Shaft Hole Is Off Center)(The Housing Is Casted 40-43 Teeth But Also Works For 44-45 Teeth)	1	
44774CK	Speed-O Housing Kit, 250C/350C 2” Plastic (W/34T Plastic Shaft Gear) 1980-86	1	
44775A	Converter Nut, 250/250C/350/350C Coarse Thread (No Flange) 1969-86	3	
44775AA	Converter Nut, 250/250C/350/350C Fine Thread (Self Locking) 1969-86	3	
44775AK	Converter Bolt & Nut Set, 250/250C/350/350C 1969-86	3	
44775B	Converter Bolt, 250/250C/350/350C Coarse Thread (With Flange) 1969-86	3	
44775BA	Converter Bolt, 250/250C/350/350C Fine Thread (No Flange) 1969-86	3	
44775C	Converter Bolt, 250C/350C Metric 1980-86	3	
44775D	Converter Bolt, 250/250C/350/350C Coarse Thread (No Flange) 1979-86	3	
44777K	Bolt Set, 250/250C/350/350C Pump to Case 1969-86 (8 Per Set)	1	
44779	Bolt, 250/250C/350/350C Bottom Pan to Case 1969-86	13	
44779K	Bolt Set, 250/250C/350/350C Bottom Pan to Case 1969-86 (13 Per Set)	1	
44781K	Bolt Set, 250/250C/350/350C Case to Extension Housing 1969-86 (4 Per Set)	1	
44782K	Bolt Set, 250/250C/350/350C Valve Body to Case 1969-86 (18 Per Set)	1	
34785K	Bolt Set, 250/250C/350/350C Modulator & Speed-O Bracket 1969-86 (4 Per Set)	1	
44793K	Bolt Set, 250/250C/350/350C Filter To Valve Body (2 Pieces)	1	
34797	Bolt, 250/350 Holds External Shift Lever On (SAE) 1969-79	1	
34797B	Bolt, 250C/350C Holds External Linkage on (Metric) 1969-79	1	
44839	Magnet, 250/250C/350/350C Pan (Rectangular) 1969-86	1	
44839A	Magnet, 250/250C/350/350C Pan (Round) 1969-86	1	
44842	Bracket, 250/250C/350/350C Holds Small Speed-O Housing in 1969-86	1	1254856
74842	Bracket, 250/250C/350/350C Holds Large Speed-O Housing in 1969-86	1	12338069
44843A	Bracket, 250/250C/350/350C Holds Modulator in 1969-86	1	6261285
44843B	Bracket, 250/250C/350/350C Modulator Repair Bracket 1969-86	1	
44846	Bracket, 250/250C/350/350C 4x4 (For Use of a 6 Bolt Cover on 4 Bolt Case) 1969-86	1	
44847	Bushing, 250/250C/350/350C Extension Housing (1.500”ID)(Bronze) 1969-86	1	
44847A	Gear, 350 Speed-O Drive (8 Teeth) Orange (5/16” Slot) (Smooth ID)	1	
44847AA	Gear, 350 Speed-O Drive (8 Teeth) Orange (5/16” Slot) (Stepped ID)	1	
44847AD	Gear, 350 Speed-O Drive (8 Teeth) Black (5/16” Slot)	1	
44847B	Gear, 350 Speed-O Drive (9 Teeth) Green (5/16” Slot)	1	
44847BD	Gear, 350 Speed-O Drive (9 Teeth) Blue (5/16” Slot)	1	
44847BW	Gear, 350 Speed-O Drive (9 Teeth) Green (1/2” Slot)	1	
44847C	Gear, 350 Speed-O Drive (17 Teeth) Red (7/16” Slot)	1	
44847CA	Gear, 350 Speed-O Drive (17 Teeth) Red (5/16” Slot)	1	
44847CW	Gear, 350 Speed-O Drive (17 Teeth) Red (7/16” Slot)	1	
44847D	Gear, 350 Speed-O Drive (18 Teeth) Light Green (5/16” Slot)	1	
44847DD	Gear, 350 Speed-O Drive (18 Teeth) Blue (1/2” Slot)	1	
44847DW	Gear, 350 Speed-O Drive (18 Teeth) Blue (1/2” Slot)	1	
44847DY	Gear, 350 Speed-O Drive (19 Teeth) Natural (7/16” Slot)	1	
44847DZ	Gear, 350 Speed-O Drive (19 Teeth) Yellow (5/16” Slot)	1	
34848A	Gear, 200/200C/350/350C Speed-O Driven (34 Teeth) Green (With Plastic Shaft)	1	
44848A	Gear, 250/250C/350/350C Speed-O Driven (20 Teeth)	1	
34848B	Gear, 200/200C/350/350C Speed-O Driven (35 Teeth) Orange (With Plastic Shaft)	1	
44848B	Gear, 250/250C/350/350C Speed-O Driven (21 Teeth) Red	1	
34848C	Gear, 200/200C/350/350C Speed-O Driven (36 Teeth) White (With Plastic Shaft)	1	

© Whatever It Takes Transmission Parts. Inc.

PART #	HARD PARTS (Continued)	QTY.	REFERENCE #
44848C	Gear, 250/250C/350/350C Speed-O Driven (22 Teeth) Gray	1	
34848D	Gear, 200/200C/350/350C Speed-O Driven (37 Teeth) Red (With Plastic Shaft)	1	
44848D	Gear, 250/250C/350/350C Speed-O Driven (23 Teeth) Black	1	
34848E	Gear, 200/200C/350/350C Speed-O Driven (38 Teeth) Blue (With Plastic Shaft)	1	
44848E	Gear, 250/250C/350/350C Speed-O Driven (24 Teeth) Yellow	1	
34848F	Gear, 200/200C/350/350C Speed-O Driven (39 Teeth) Brown (With Plastic Shaft)	1	
34848G	Gear, 200/200C/350/350C Speed-O Driven (40 Teeth) Black (With Plastic Shaft)	1	
34848H	Gear, 200/200C/350/350C Speed-O Driven (41 Teeth) Yellow (With Plastic Shaft)	1	
34848HA	Gear, 200/200C/350/350C Speed-O Driven (42 Teeth) Green (With Plastic Shaft)	1	
34848J	Gear, 200/200C/350/350C Speed-O Driven (43 Teeth) Purple (With Plastic Shaft)	1	
34848K	Gear, 200/200C/350/350C Speed-O Driven (44 Teeth) Gray (With Plastic Shaft)	1	
34848L	Gear, 200/200C/350/350C Speed-O Driven (45 Teeth) Blue (With Plastic Shaft)	1	
44849A	Clip, 250/250C/350/350C Speed-O Drive Gear (Long Narrow Type) 1969-86	1	2513329
44849B	Clip, 250/250C/350/350C Speed-O Drive Gear (Short Wide Type) 1969-86	1	
44852	Cushion, 350/350C Intermediate Clutch 1969-86	1	1243139
44858	Cushion, 350/350C Direct Clutch 1969-81 (No Outer Tabs) (Can Fit 250/250C Forward Clutch)	2	8640176
44858A	Cushion, 350/350C/250/250C Forward Clutch (3 Outer Tabs) 1982-86	2	
44864	Snap Ring, 350/350C Holds Intermediate Sprag to Direct Drum 1969-86	1	6261038
44878	Snap Ring, 250/250C/350/350C Holds Forward & Direct Pressure Plate in Drum 1969-86	2	6261048
44879	Snap Ring, 250/250C/350/350C Holds Retainer to Forward & Direct Drum 1969-86	2	6261037
44883	Snap Ring, 250/250C/350/350C Holds Center Support to Case 1969-86 (Use 74883)	1	6261416
74883	Snap Ring, 250/250C/350/350C Holds Center Support to Case 1969-86	1	
44884	Snap Ring, 250/250C/350/350C Holds Sprag to Center Support 1969-86	2	6261051
44886	Snap Ring, 250/250C/350/350C Holds Sun Gear to Shell 1969-86	2	6261066
44887	Snap Ring, 250/250C/350/350C Holds Seal to Speed-O Housing 1969-86	1	
44893	Snap Ring, 250/250C/350/350C Holds Reverse Clutch Retainer to Case 1969-86	1	6261041
44894	Snap Ring, 250/250C/350/350C Holds Front Planet to Output Shaft 1969-86	1	6261039
44895	Snap Ring, 250/250C/350/350C Holds Rear Planet to Output Shaft 1969-86	1	6261040
44896	Snap Ring, 350/350C Holds Intermediate Accumulator Cover on 1969-86	1	6260138
44905	Servo Assembly, 250/250C Intermediate 1969-86	1	
44905A	Servo Assembly, 350/350C Intermediate 1969-86	1	
44906	Spring, 250/250C Intermediate Servo (No Color) 1969-86	1	6261229
44906A	Spring, 250/250C Intermediate Servo (Pink) 1969-86	1	8640738
44906B	Spring, 250/250C Intermediate Servo (White) 1969-86	1	8640745
44906C	Spring, 350/350C Intermediate Servo (Orange) 1969-86	1	6261140
44906D	Spring, 350/350C Intermediate Servo (Purple) 1969-86	1	6261629
44906E	Spring, 350/350C Intermediate Servo (Green) 1969-86	1	6261231
44906W	Spring, 250C Intermediate Servo (Waved Cushion) 1980-86	1	8641012
44907	Piston, 250/250C Intermediate Servo 1969-86	1	342494
44908	Pin, 250/250C Intermediate Servo 1969-86	1	8640740
44909	Spring Seat, 350/350C Intermediate Servo 1969-86	1	6261178
44925	Accumulator Assembly, 350/350C Intermediate 1969-86	1	
44926	Spring, 350/350C Intermediate Accumulator 1969-86	1	6261140
44926A	Spring, 250 Intermediate Accumulator (No Color) 1969-79	1	6261333
44927	Piston, 350/350C Intermediate Accumulator 1969-86	1	1239836
44929	Cover, 350/350C Intermediate Accumulator (Steel) 1969-86	1	1243476
44930	Accumulator Assembly, 350/350C Direct 1969-86	1	
44931	Spring, 350/350C Direct Accumulator 1969-86	1	6261612
44932	Piston, 350/350C Direct Accumulator 1969-86	1	1243383
S44933AK	Pin Kit, 350/350C Direct Accumulator 1969-86 (Sonnax)(4 Per Kit)	1	35718-01K
S44933BK	Starter Pin Kit, 350/350C Direct Accumulator 1969-86 (Sonnax)	1	35718-02K
44958	Yoke Tube, 250/250C/350/350C (Tin) 1969-86	1	6261062
44962	Piston, 350/350C Intermediate Clutch (3 Clutch) 1969-86	1	
44964	Piston, 250/250C/350/350C Forward Clutch (5 Clutch) 1969-86	1	8640071
44965	Piston, 350/350C Direct Clutch (5 Clutch) 1969-86	1	
44965A	Piston, 250/250C/350/350C Direct Clutch (4 Clutch) 1969-86	1	6260196
44966	Piston, 250/250C/350/350C Low/Reverse Clutch (5 Clutch) 1969-86	1	344212
44966A	Piston, 250/250C/350/350C Low/Reverse Clutch (4 Clutch) 1969-86	1	
44972	Retainer W/Spring, 350/350C Intermediate Clutch 1969-86	1	1243139
44974	Retainer W/Spring, 250/250C/350/350C Forward Clutch 1969-86	1	1242722
44975	Retainer W/Spring, 250/250C/350/350C Direct Clutch 1969-86	1	8640005
44977	Retainer W/Spring, 250/250C/350/350C Low/Reverse Clutch 1969-86	1	6260382
74977	Retainer W/Springs, 350/350C Low/Reverse Clutch	1	
44980	Retainer, 350/350C Intermediate Sprag 1969-86	1	6261143
44991	Linkage Assembly, 250/250C/350/350C Internal 1969-86 (Uses “S” Type Link)	1	
44991A	Linkage Assembly, 250/250C/350/350C Internal 1969-86 (Uses “Z” Type Link)	1	
44991-3	Rooster Comb, 250/250C/350/350C Internal (Range Selector) 1969-86	1	330136
44991-4	Shift Lever Shaft, 250/250C/350/350C (Goes Thru Case) 1969-86	1	470107

© Whatever It Takes Transmission Parts. Inc.

S44991-4K	Shift Lever Shaft & Seal Kit, 350/350C (Goes Thru Case) 1969-86 (Sonnax)	1	
44991-6	Bracket, 250/250C/350/350C Parking Lock Reaction 1969-86	1	1377861
34992	Shift Lever, 250/250C/350/350C External 1969-86	1	
44994	Park Rod, 250/250C/350/350C Actuator 1969-86	1	8641818
44995	Park Pawl Assembly, 350 (With Coil Spring)	1	
44995A	Park Pawl Assembly, 350 (With Wire Type Spring)	1	
44995-1	Park Pawl, 250/250C/350/350C Hinges Inside Case 1969-86	1	6261657
44995-2	Shaft, 250/250C/350/350C Parking Pawl Release W/Cup Plug 1969-86	1	3977619
44995-3	Spring, 250/250C/350/350C Parking Pawl Release (Hinges Inside Case) 1969-86	1	6260253
44996	Fitting, 250/250C/350/350C Cooler Line (Pipe Thread) 1969-77	2	
44996A	Fitting, 250/250C/350/350C Cooler Line (Machine Thread) 1978-86	2	
44997-2	Hair Pin, 350/350C Detent Lever Actuator 1969-86	1	6161288
44997-3	Detent Lever Actuator, 250/250C/350/350C From Rod to Actuator 1969-86	1	6261186
44997-7	Link, 250/250C/350/350C Detent Wire 1969-86	1	1243133

© Whatever It Takes Transmission Parts. Inc.

GM

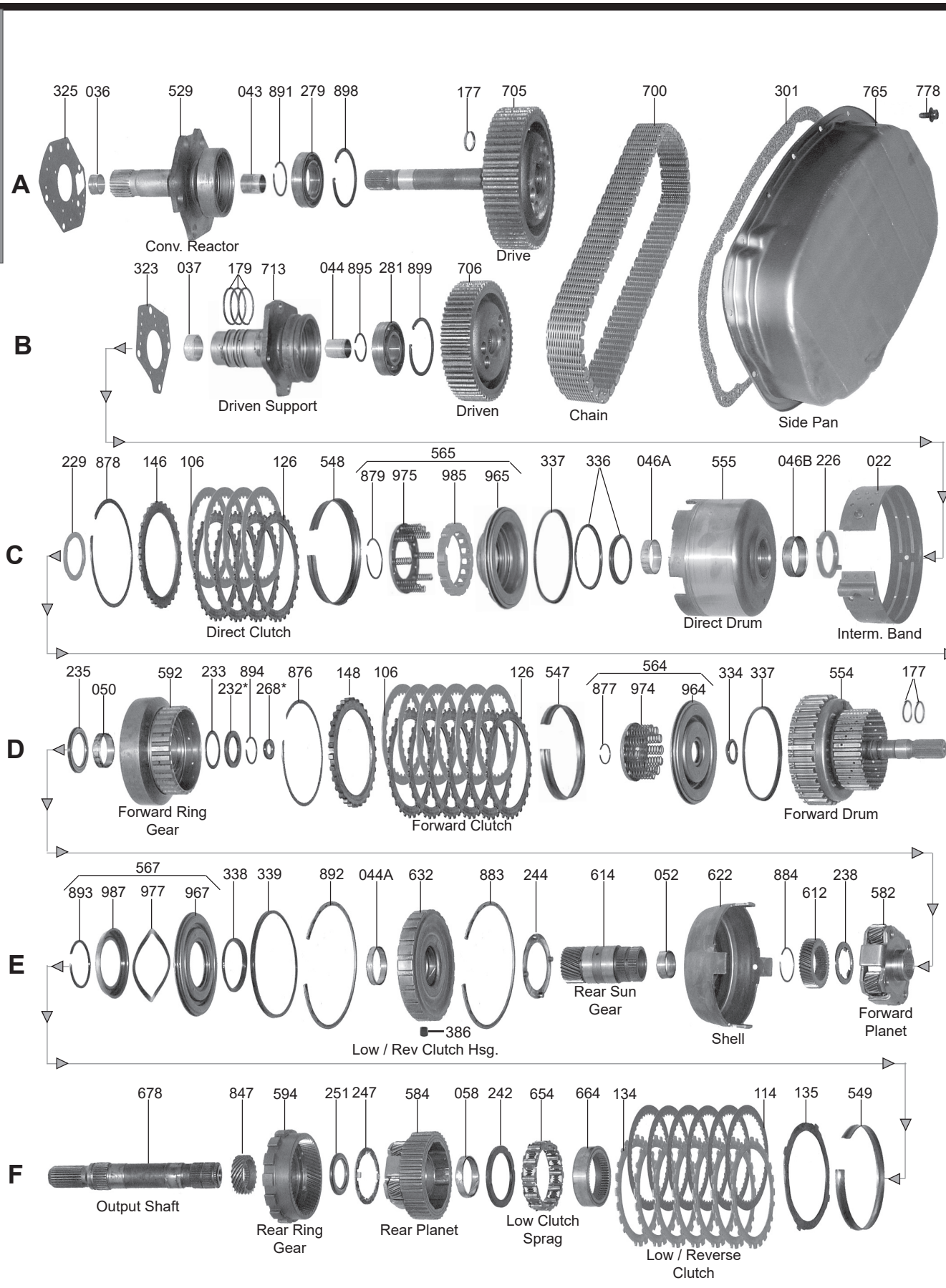

000 P&R Kit
002 OHK Kit
004 Master L/Steels Kit
006 Master W/Steels Kit
011 Filter Kit
030 Bushing Kit
119 Friction Module
139 Steel Module
165 V.B. Kit
175 Ring Kit
200 Washer Kit
201 Bearing Kit
400 Tech Manuals

© Whatever It Takes Transmission Parts. Inc.

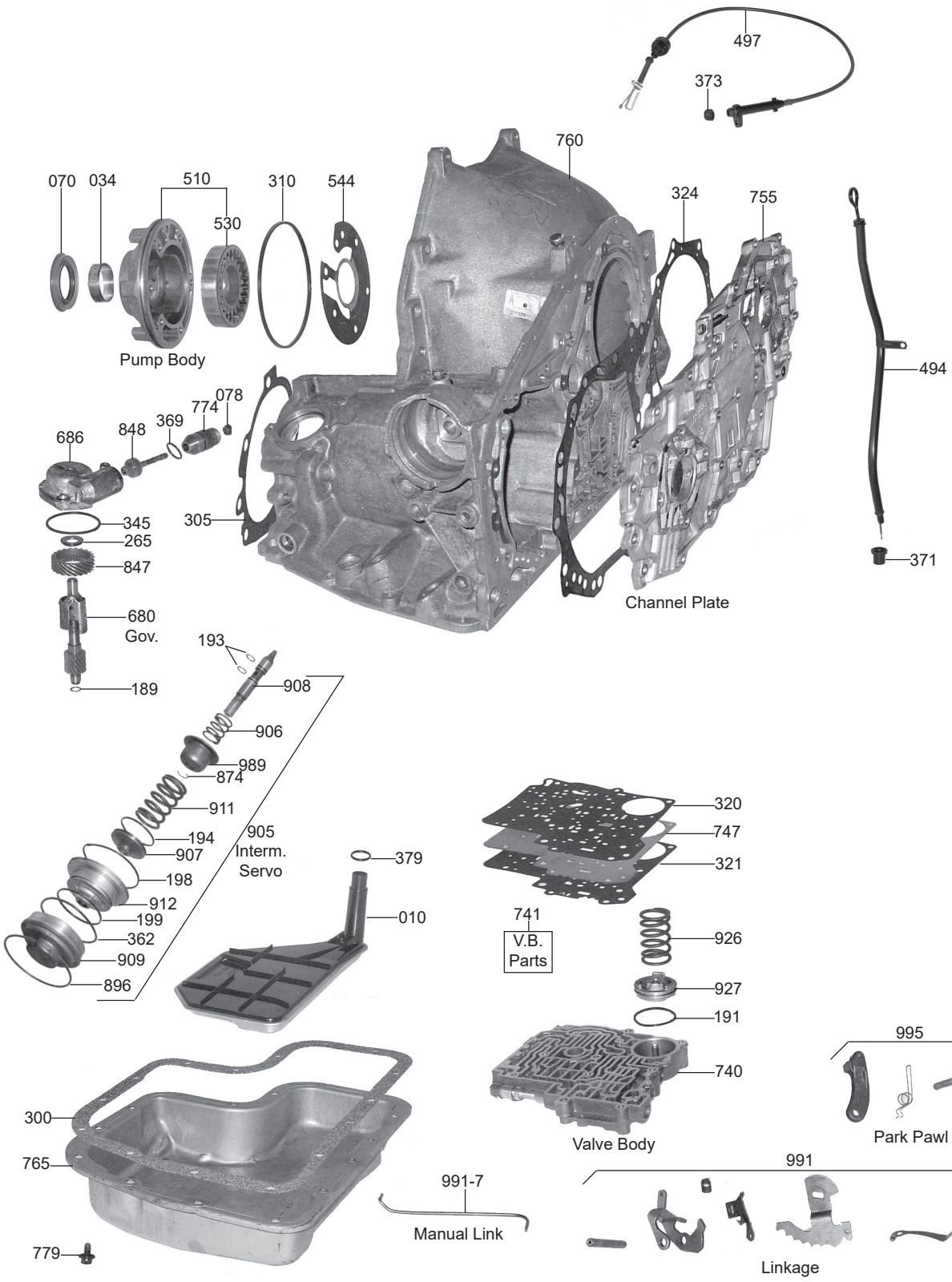

© Whatever It Takes Transmission Parts. Inc.

GM

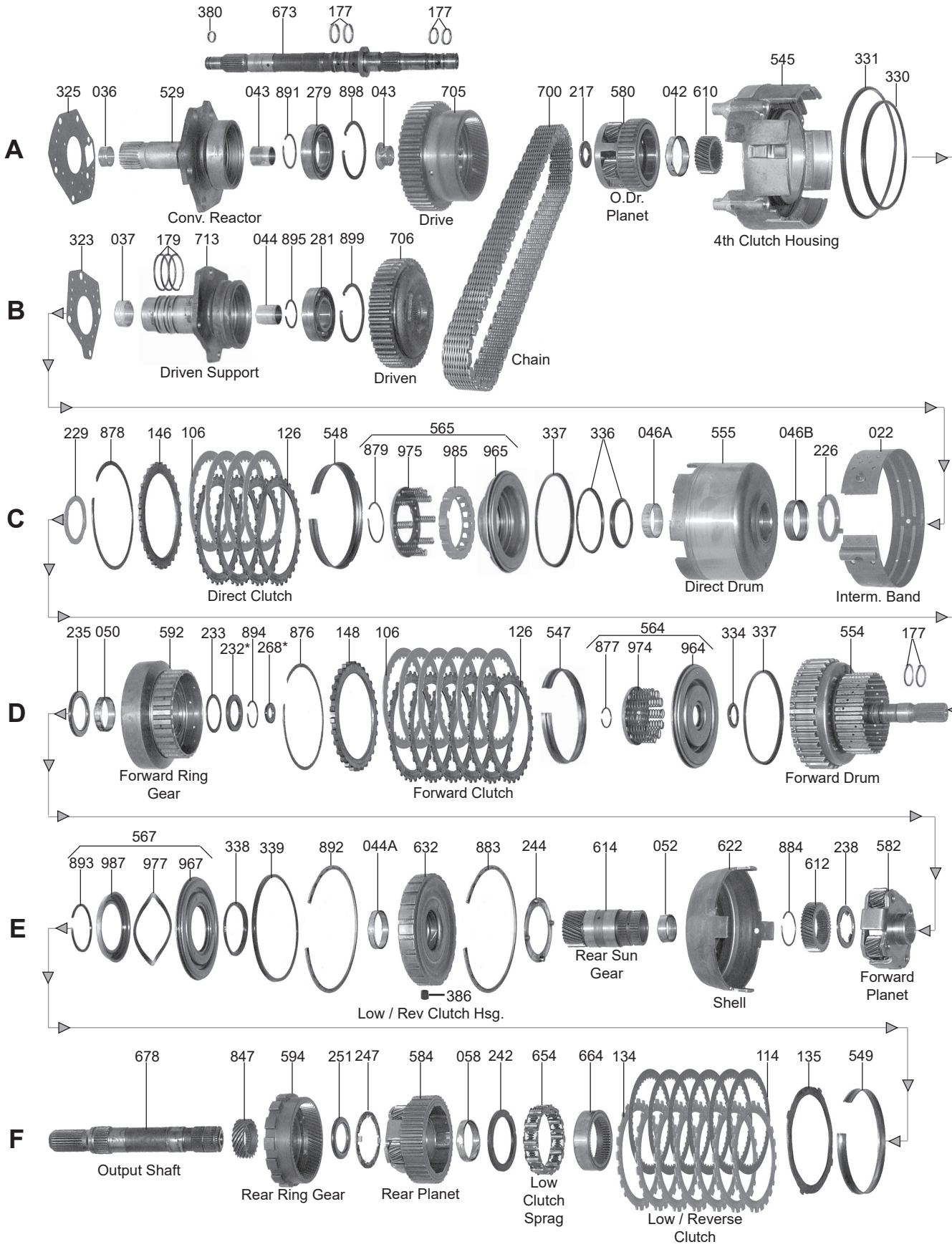

000 P&R Kits

002 Overhaul Kits

004 Master L/Steels Kit

006 Master W/Steels Kit

011 Filter Kits

030 Bushing Kits

119 Friction Module

139 Steel Module

165 Valve Body Kits

175 Ring Kits

200 Washer Kits

201 Bearing Kits

400 Technical Manual

© Whatever It Takes Transmission Parts. Inc.

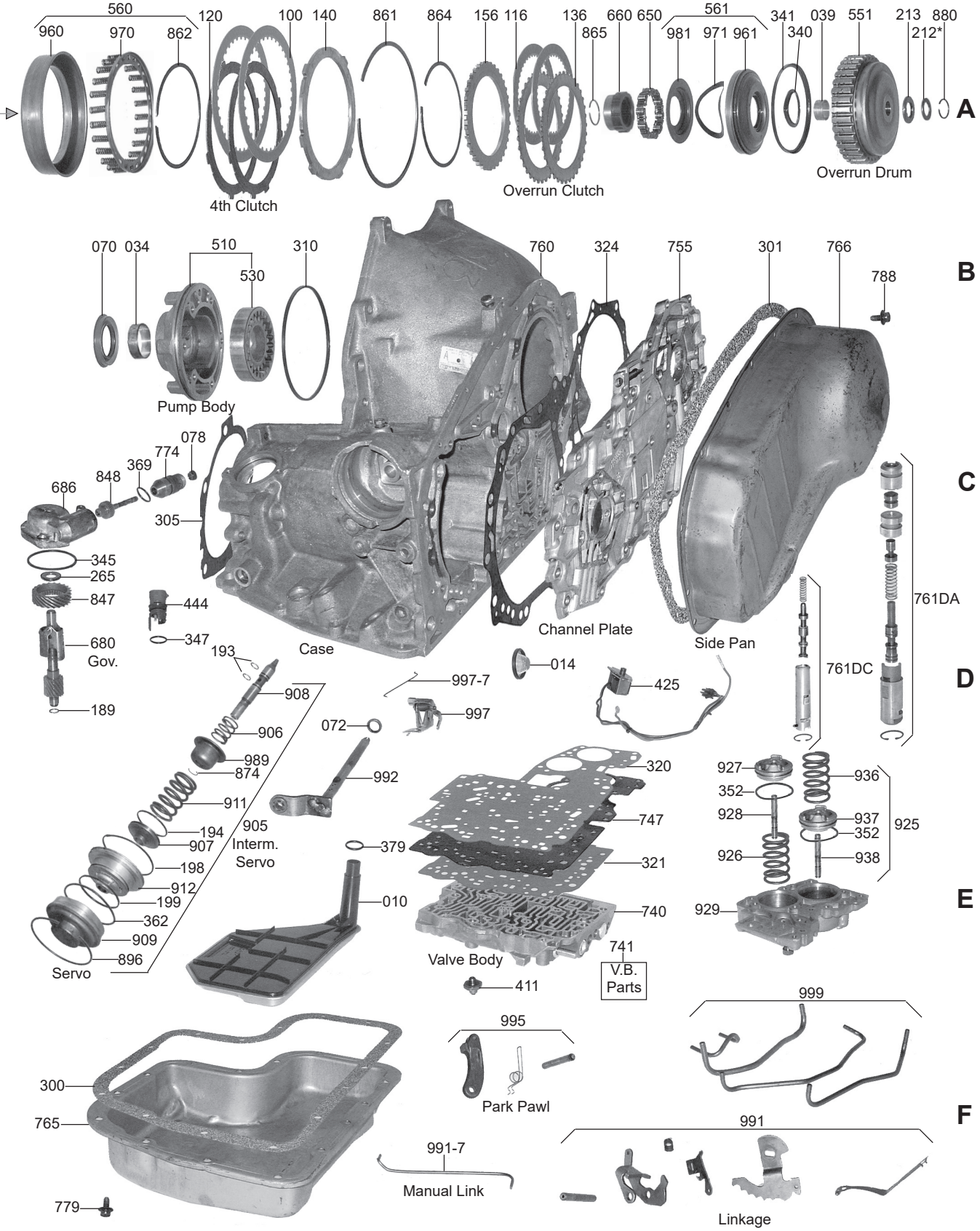

1-800-940-0197

© Whatever It Takes Transmission Parts. Inc.

PART #	PAPER & RUBBER KIT	QTY.	REFERENCE #
54000C	Paper & Rubber Kit, 325 1979-81	1	
54000D	Paper & Rubber Kit, 325-4L 1982-85	1	

PART #	OVERHAUL KIT	QTY.	REFERENCE #
54002C	Overhaul Kit, 325 1979-81	1	
54002D	Overhaul Kit, 325-4L 1982-85	1	

PART #	MASTER L/STEEL KIT	QTY.	REFERENCE #
54004C	Master L/Steels, 325 1979-81	1	
54004D	Master L/Steels, 325-4L 1982-85	1	

PART #	MASTER W/STEEL KIT	QTY.	REFERENCE #
54006C	Master W/Steels, 325 1977-81	1	
54006D	Master W/Steels, 325-4L 1982-85	1	

PART #	FILTER	QTY.	REFERENCE #
54010C	Filter, 325 1979-81	1	8632997
54010D	Filter, 325-4L 1982-85	1	8635166

PART #	FILTER KIT	QTY.	REFERENCE #
54011C	Filter Kit, 325 1979-81	1	
54011D	Filter Kit, 325-4L 1982-85	1	

PART #	MISC. FILTERS	QTY.	REFERENCE #
54014D	Filter, 325-4L Governor Screen 1982-85	1	8635111

PART #	BANDS	QTY.	REFERENCE #
54022A	Band, 325/325-4L Flex 1979-85	1	8657210
54022AK	Band, 325/325-4L Flex (Kevlar Lining) 1979-85	1	

PART #	BUSHINGS	QTY.	REFERENCE #
54030C	Bushing Kit, 325 1979-81	1	
54030D	Bushing Kit, 325-4L 1982-85	1	
44034	Bushing, 325 Pump Body 1979-81	1	8629961
54034A	Bushing, 325-4L Pump Body 1982-85	1	8649963
54036A	Bushing, 325-4L Converter Reactor (Stator) 1982-85	1	8628915
34037	Bushing, 325 Converter Reactor (Stator) 1979-81	1	8623944
54037A	Bushing, 325-4L Driven Sprocket Support 1982-85	1	8628916
54039B	Bushing, 325-4L Overrun Drum 1982-85	1	8634908
54042B	Bushing, 325-4L Overdrive Planet 1982-85 (Use 64044)	1	
64044	Bushing, 325-4L Overdrive Planet 1982-85	1	
54043D	Bushing, 325-4L Drive Sprocket 1982-85	1	
54044A	Bushing, 325/325-4L Low/Reverse Clutch Housing (Center Support) 1976-90	1	8628929
54044B	Bushing, 325/325-4L Direct Drum Support (Rear)	1	
54044C	Bushing, 325/325-4L Direct Drum Support (Front) 1979-85	1	
54046AA	Bushing, 325/325-4L Direct Drum (Large) (2.110"OD) 1979-85	1	8628918
54046BA	Bushing, 325/325-4L Direct Drum (Small) (Babbit) 1979-85	1	8634917
54050A	Bushing, 325/325-4L Forward Ring Gear 1979-85	1	8630990
54052A	Bushing, 325/325-4L Rear Sun Gear 1979-85	1	8628928
54058A	Bushing, 325/325-4L Rear Planet 1979-85	1	8628947

PART #	METAL CLAD SEALS	QTY.	REFERENCE #
44070	Seal, 325 Front (Converter) 1979-81	1	8641826
74070	Seal, 325-4L Front (Converter) 1982-85	1	8648394
44072	Seal, 325/325-4L Linkage Shaft 1979-85	1	8623056
44078A	Seal, 325/325-4L Speed-O Shaft W/Spring 1979-85	1	25519078
44078X	Seal, 325/325-4L Speed-O Shaft W/Out Spring 1979-85	1	1240382

© Whatever It Takes Transmission Parts. Inc.

PART #	FRICTION CLUTCH	QTY.	REFERENCE #
54100B	Friction, 325-4L 4th Clutch .080" 1982-85	2	8657170
54100BHP	Friction, 325-4L 4th Clutch .080" (Hi-Perf.) 1982-85	2	
54106A	Friction, 325/325-4L Forward & Direct Clutch .078" 1979-85	6-11	8657168
54106AHD	Friction, 325/325-4L Forward & Direct Clutch .078" (Heavy Duty) 1979-85	6-11	
54106AHP	Friction, 325/325-4L Forward & Direct Clutch .078" (Hi-Perf.) 1979-85	6-11	
54106AHPK	Friction Kit, 325/325-4L Forward & Direct Clutch .078" (Hi-Perf.)(5 Per Kit) 1979-85	1-2	
54106AS1	Friction, 325/325-4L Forward & Direct Clutch (.078")(Stage 1)	6-11	
54114A	Friction, 325/325-4L Low/Reverse Clutch .078" 1979-85	4-6	8669069
54114AHD	Friction, 325/325-4L Low/Reverse Clutch .078" (Heavy Duty) 1979-85	4-6	
54114AHP	Friction, 325/325-4L Low/Reverse Clutch .078" (Hi-Perf.) 1979-85	4-6	
54114AHPK	Friction Kit, 325/325-4L Low/Reverse Clutch .078" (Hi-Perf.)(6 Per Kit) 1979-85	1	
54116B	Friction, 325-4L Overrun Clutch .080" 1982-85	2	8657031
54116BHPK	Friction Kit, 325-4L Overrun Clutch .080" (Hi-Perf.)(2 Per Kit) 1982-85	1	
54119A	Friction Module, 325 1979-81	1	
54119B	Friction Module, 325-4L 1982-85	1	
54119BAHP	Friction Module, 325-4L (Hi-Performance) (Red Eagle) (Alto)	1	
54119BS1	Friction Module, 325-4L (Stage 1) 1981-90	1	

PART #	STEEL CLUTCH	QTY.	REFERENCE #
54120B	Steel, 325-4L 4th Clutch .080" 1982-85	3	8634026
54126A	Steel, 325/325-4L Direct Clutch .090" 1979-85	5-6	8628484
54126AA	Steel, 325/325-4L Forward Clutch .077" (Flat) 1979-85	3-5	8678902
54126AB	Steel, 325/325-4L Forward Clutch .060" (Waved) 1979-85	1	8678901
54126AC	Steel, 325/325-4L Forward Clutch .060" (Flat)(Commercial) 1979-85	AR	
54126AX	Steel, 325/325-4L Direct Clutch .100" (Oversize) 1979-85	AR	
54134A	Steel, 325/325-4L Low/Reverse Clutch .076" 1979-85	5-7	8628224
54134AX	Steel, 325/325-4L Low/Reverse Clutch .092" (Oversize) 1979-85	AR	
54135A	Steel, 325/325-4L Low/Reverse Clutch .078" (Waved) 1979-85	1	8633371
54136B	Steel, 325-4L Overrun Clutch .080" 1982-85	2	8634050
54139C	Steel Module, 325 1979-81	1	
54139D	Steel Module, 325-4L 1982-85	1	

PART #	CLUTCH PRESSURE PLATES	QTY.	REFERENCE #
54140B	Pressure Plate, 325-4L 4th Clutch (Top) 1982-85	1	8634866
54146A	Pressure Plate, 325 Direct Clutch (.245"Thick)(Also Fits 325/325-4L Forward Clutch)	1-2	8628088
54146AB	Pressure Plate, 325/325-4L Direct Clutch (.170"Thick)(Powerpack Component)	1	
54146AC	Pressure Plate, 325-4L Direct Clutch (.180"Thick)(Flat)	1	
54148B	Pressure Plate, 325/325-4L Forward Clutch (Use 54146A) 1979-85	1	
54156B	Pressure Plate, 325-4L Overrun Clutch 1982-85	1	8634052

PART #	VALVE BODY KITS	QTY.	REFERENCE #
T54165C	Valve Body Kit, 325 (Transgo) 1979-81	1	SK@ 325
T54165D	Valve Body Kit, 325-4L (Transgo) 1982-85	1	SK@ 325-4L

PART #	OIL SEALING RINGS	QTY.	REFERENCE #
54175C	Ring Kit, 325-4L (Metal) 1979-81	1	
54175CT	Ring Kit, 325-4L (Teflon) 1979-81	1	
54175D	Ring Kit, 325-4L (Metal) 1982-85	1	
54175DT	Ring Kit, 325-4L (Teflon) 1982-85	1	
54177A	Ring, 325/325-4L Forward Drum Shaft (Metal) 1979-85	2	8628090
54177AT	Ring, 325/325-4L Forward Drum Shaft (Teflon, Scarf Cut) 1979-85	2	
54177BT	Ring, 325/325-4L Forward Drum Shaft (Teflon, Solid) 1979-85	2	8634598
54177DT	Ring, 325 Drive Sprocket (Teflon) 1979-81	1	
54177DAT	Ring, 325-4L Turbine Shaft (Front)(Teflon, Scarf Cut) 1982-85	1	8635043
54177DBT	Ring, 325-4L Turbine Shaft (Front)(Teflon, Solid) 1982-85	1	8635497
54177DCT	Ring, 325-4L Turbine Shaft (Rear)(Teflon) 1982-85	2	8635042
34178	Ring, 325 Turbine Shaft (Metal) 1979-81	1	8623296
54179AT	Ring, 325/325-4L Driven Sprocket Support (Teflon) 1979-85	3	8628055
54179C	Ring, 325/325-4L Driven Sprocket Support (Metal) 1979-85	3	
54189AT	Ring, 325/325-4L Governor Stem (Teflon) 1979-85	1	8632588
54191A	Ring, 325 Accumulator (Metal) 1979-81	1	8634161
54191AT	Ring, 325-4L Accumulator (Metal) 1982-85	1	
54193BT	Ring, 325/325-4L Band Apply Pin (Teflon) 1979-85	2	8630120

© Whatever It Takes Transmission Parts. Inc.

PART #	OIL SEALING RINGS (Continued)	QTY.	REFERENCE #
54194AE	Ring, 325/325-4L Intermediate Servo Piston (Inner) 2.28” (Metal) 1979-85	1	8632150
54194AET	Ring, 325/325-4L Intermediate Servo Piston (Inner) 2.28” (Teflon) 1979-85	1	
54194AF	Ring, 325/325-4L Intermediate Servo Piston (Inner) 1.96” (Metal) 1979-85	1	8630568
54194AFT	Ring, 325/325-4L Intermediate Servo Piston (Inner) 1.96” (Teflon) 1979-85	1	
54194AH	Ring, 325/325-4L Intermediate Servo Piston (Inner) 2.41” (Metal) 1979-85	1	8632151
54194AHT	Ring, 325/325-4L Intermediate Servo Piston (Inner) 2.41” (Teflon) 1979-85	1	
54198A	Ring, 325/325-4L Intermediate Servo Piston (Outer)(Large, Metal) 1979-85	1	8628123
54198AT	Ring, 325/325-4L Intermediate Servo Piston (Outer)(Large, Teflon) 1979-85	1	
54199A	Ring, 325/325-4L Intermediate Servo Piston (Outer) 2.67” (Small, Metal) 1979-85	1	8628124
54199AT	Ring, 325/325-4L Intermediate Servo Piston (Outer) 2.67” (Small, Teflon) 1979-85	1	
54199AB	Ring, 325/325-4L Intermediate Servo Piston (Outer) 2.89” (Small, Metal) 1979-85	1	8628125
54199ABT	Ring, 325/325-4L Intermediate Servo Piston (Outer) 2.89” (Small, Teflon) 1979-85	1	

PART #	WASHERS & BEARINGS	QTY.	REFERENCE #
54200D	Washer Kit, 325/325-4L 1979-85	1	
54201A	Bearing Kit, 325/325-4L 1979-85	1	
54212D	Washer, 325-4L Overdrive Clutch Housing .065” (# 1) 1982-85	1	8635225
54212DA	Washer, 325-4L Overdrive Clutch Housing .073” (# 2) 1982-85	1	8635226
54212DB	Washer, 325-4L Overdrive Clutch Housing .079” (# 3) 1982-85	1	8635227
54212DC	Washer, 325-4L Overdrive Clutch Housing .086” (# 4) 1982-85	1	8635228
54212DD	Washer, 325-4L Overdrive Clutch Housing .093” (# 5) 1982-85	1	8635229
54212DE	Washer, 325-4L Overdrive Clutch Housing .100” (# 6) 1982-85	1	8635230
54212DF	Washer, 325-4L Overdrive Clutch Housing .107” (# 7) 1982-85	1	8635231
54212DG	Washer, 325-4L Overdrive Clutch Housing .114” (# 8) 1982-85	1	8635232
54212DH	Washer, 325-4L Overdrive Clutch Housing .121” (# 9) 1982-85	1	8635233
54212DJ	Washer, 325-4L Overdrive Clutch Housing .128” (# 10) 1982-85	1	8635234
54212DK	Washer, 325-4L Overdrive Clutch Housing .135” (# 11) 1982-85	1	8635235
54212DL	Washer, 325-4L Overdrive Clutch Housing .142” (# 12) 1982-85	1	8635236
54213D	Washer, 325-4L Overrun Clutch Housing 1982-85	1	8635058
54217B	Washer, 325-4L Overdrive Planet 1982-85	2	8634035
54226C	Washer, 325/325-4L Direct Drum to Case Cover 1979-85	1	8632020
54229C	Washer, 325/325-4L Direct Drum to Forward Drum 1979-85	1	8632504
54232-1	Shim, 325/325-4L (.007”) (Use With 54232 To Adjust Front Planet Inplay)	AR	
54232	Washer, 325/325-4L Forward Drum to Hub .100” 1979-85	1	
54232A	Washer, 325/325-4L Forward Drum to Hub .117” (# 1) 1979-85	1	8630891
54232AA	Washer, 325/325-4L Forward Drum to Hub .124” (# 2) 1979-85	1	8630892
54232B	Washer, 325/325-4L Forward Drum to Hub .131” (# 3) 1979-85	1	8630893
54232C	Washer, 325/325-4L Forward Drum to Hub .138” (# 4) 1979-85	1	8630894
54232D	Washer, 325/325-4L Forward Drum to Hub .145” (# 5) 1979-85	1	8630895
54232E	Washer, 325/325-4L Forward Drum to Hub .152” (# 6) 1979-85	1	8630896
54232F	Washer, 325/325-4L Forward Drum to Hub .159” (# 7) 1979-85	1	8630897
54232G	Washer, 325/325-4L Forward Drum to Hub .166” (# 8) 1979-85	1	8630898
54232H	Washer, 325/325-4L Forward Drum to Hub .173” (# 9) 1979-85	1	8630899
54233A	Washer, 325/325-4L Forward Hub to Spacer 1979-85	1	8628765
54235A	Bearing, 325/325-4L Front Planet to Hub 1979-85	1	8628202
54238A	Bearing, 325/325-4L Front Planet to Sun Gear 1979-85	1	8633875
54242AA	Bearing, 325/325-4L Rear Planet to Sprag Race 1979-85 (Use 84286B)	1	8648389
84286B	Bearing, 325/325-4L Rear Planet To Sprag Race 1979-85	1	
54244A	Washer, 325/325-4L Shell to Low/Reverse Clutch Housing .060” (Plastic) 1979-85	1	8628766
54244AA	Washer, 325/325-4L Shell to Low/Reverse Clutch Housing .080” (Plastic) 1979-85	1	
54244AB	Washer, 325/325-4L Shell to Low/Reverse Clutch Housing (Metal) 1979-85 (Use 34268)	1	8628549
34268	Washer, 325/325-4L Low/Reverse Clutch Housing	1	
54247A	Bearing, 325/325-4L Sun Gear to Rear Ring Gear 1979-85	1	8628962
54251A	Washer, 325/325-4L Rear Planet to Rear Ring Gear 1979-85	1	8628188
54265A	Bearing, 325/325-4L Governor Cap to Speed-O Gear 1979-85	1	8635490
64265A	Bearing, 325/325-4L Governor To Cover 1980-Up	1	
54268	Washer, 325/325-4L Forward Drum to Output Shaft .068” (# 1) 1979-85	1	8639291
54268A	Washer, 325/325-4L Forward Drum to Output Shaft .073” (# 2) 1979-85	1	8639292
54268B	Washer, 325/325-4L Forward Drum to Output Shaft .078” (# 3) 1979-85	1	8639293
54268C	Washer, 325/325-4L Forward Drum to Output Shaft .083” (# 4) 1979-85	1	8639294
54268D	Washer, 325/325-4L Forward Drum to Output Shaft .088” (# 5) 1979-85	1	8639295
54268E	Washer, 325/325-4L Forward Drum to Output Shaft .093” (# 6) 1979-85	1	8639296
54268F	Washer, 325/325-4L Forward Drum to Output Shaft .098” (# 7) 1979-85	1	8639297
54268G	Washer, 325/325-4L Forward Drum to Output Shaft .103” (# 8) 1979-85	1	8639298
54268H	Washer, 325/325-4L Forward Drum to Output Shaft .108” (# 9) 1979-85	1	8639299
54268J	Washer, 325/325-4L Forward Drum to Output Shaft .113” (# 10) 1979-85	1	8639300
54268K	Washer, 325/325-4L Forward Drum to Output Shaft .118” (# 11) 1979-85	1	8639301

© Whatever It Takes Transmission Parts. Inc.

54268L	Washer, 325/325-4L Forward Drum to Output Shaft .123" (# 12) 1979-85	1	8639302
54268M	Washer, 325/325-4L Forward Drum to Output Shaft .128" (# 13) 1979-85	1	8639303
54268N	Washer, 325/325-4L Forward Drum to Output Shaft .133" (# 14) 1979-85	1	8639304
54268P	Washer, 325/325-4L Forward Drum to Output Shaft .138" (# 15) 1979-85	1	8639305
54279D	Ball Bearing, 325-4L Drive Sprocket 1982-85	1	
54281D	Ball Bearing, 325-4L Driven Sprocket 1982-85	1	
BS1015	Qwik Shim, 325/325-4L Front Planet Replacement Shims (Bottom) .015" 1979-85	AR	
BS1030	Qwik Shim, 325/325-4L Front Planet Replacement Shims (Bottom) .030" 1979-85	AR	
TS1015	Qwik Shim, 325/325-4L Front Planet Replacement Shims (Top) .015" 1979-85	AR	
TS1030	Qwik Shim, 325/325-4L Front Planet Replacement Shims (Top) .030" 1979-85	AR	
BS5015	Qwik Shim, 325/325-4L Rear Planet Replacement Shims (Bottom) .015" 1979-85	AR	
BS5030	Qwik Shim, 325/325-4L Rear Planet Replacement Shims (Bottom) .030" 1979-85	AR	
TS5015	Qwik Shim, 325/325-4L Rear Planet Replacement Shims (Top) .015" 1979-85	AR	
TS5030	Qwik Shim, 325/325-4L Rear Planet Replacement Shims (Top) .030" 1979-85	AR	

PART #	GASKETS & RUBBER COMPONENTS	QTY.	REFERENCE #
54300C	Gasket, 325/325-4L Pan (Bottom) 1979-85	1	8635014
54301C	Gasket, 325 Sprocket Cover 1979-81	1	8632032
54301D	Gasket, 325-4L Sprocket Cover 1982-85	1	8635154
54305C	Gasket, 325/325-4L Final Drive to Case 1979-85	1	1627494
54308D	Gasket, 325-4L Accumulator 1982-85	1	8635093
34311G	O-Ring, 325/325-4L Pump 1979-85	1	8625007
54320C	Gasket, 325 Upper Valve Body Plate to Case 1979-81	1	8632831
54320D	Gasket, 325-4L Upper Valve Body Plate to Case 1982-85	1	8659032
54321C	Gasket, 325 Lower Valve body 1979-81	1	8632832
54321D	Gasket, 325-4L Lower Valve body 1982-85	1	8639857
54323C	Gasket, 325 Driven Sprocket Support to Case Cover 1979-81	1	8632013
54323D	Gasket, 325-4L Driven Sprocket Support to Case Cover 1982-85	1	
54324C	Gasket, 325 Case Cover 1979-81	1	8632019
54324D	Gasket, 325-4L Case Cover 1982-85	1	8635025
54325C	Gasket, 325 Drive Sprocket Support to Case Cover 1979-81	1	
54325D	Gasket, 325-4L Drive Sprocket Support to Case Cover 1982-85	1	8635039
54330B	Lip Seal, 325-4L 4th Clutch (Inner) 1982-85	1	8635562
54331B	Lip Seal, 325-4L 4th Clutch (Outer) 1982-85	1	8634024
54334A	Lip Seal, 325/325-4L Forward Clutch Piston (Inner, Small) 1979-85	1	8630102
54336A	Lip Seal, 325/325-4L Direct Clutch Piston (Inner) 1979-85	1	8628079
54336AC	Lip Seal, 325/325-4L Direct Clutch Piston (Center) 1979-85	1	8630295
54337A	Lip Seal, 325/325-4L Forward & Direct Clutch Piston (Outer) 1979-85	2	8628078
54338A	Lip Seal, 325/325-4L Low/Reverse Clutch Piston (Inner) 1979-85	1	8628246
54338AK	Lip Seal Set, 325/325-4L Low/Reverse Clutch Piston 1979-85	1	
54339A	Lip Seal, 325/325-4L Low/Reverse Clutch Piston (Outer) 1979-85	1	8628364
54340B	Lip Seal, 325-4L Overrun Clutch Piston (Inner) 1982-85	1	8634054
54341B	Lip Seal, 325-4L Overrun Clutch Piston (Outer) 1982-85	1	8634053
84345	O-Ring, 325/325-4L Governor Cover 1979-85	1	8660545
54347	O-Ring, 325-4L Case Connector 1979-85 (Use 103368)	1	
54352A	Lathe Cut Seal, 325-4L 1-2 & 3-4 Accumulator 1982-85	2	8635568
54362A	O-Ring, 325/325-4L Servo Cover 1979-85	1	8628136
54362DK	Seal Kit, 325-4L Servo 1982-85	1	
103368	O-Ring, 325/325-4L Filter, Speed-O Hsg, Case Connector 1979-85	3	1240382
54369	O-Ring, 325/325-4L Speed-O Housing 1979-85 (Use 103368)	1	
44371A	O-Ring, 325 Filler Tube 1979-81	1	6264902
44371B	Boot, 325-4L Filler Tube 1982-85	1	1259475
54373A	O-Ring, 325 Detent 1979-81	1	358424
54373B	Boot, 325-4L Detent 1982-85	1	25518260
54379	O-Ring, 325/325-4L Filter 1979-85 (Use 103368)	1	
44380	O-Ring, 325-4L Input Shaft 1982-85	1	8630049
54386A	Cup Plug Seal, 325/325-4L Low/Reverse Clutch Housing 1979-85	1	8631577

PART #	TECHNICAL MANUALS	QTY.	REFERENCE #
54400D	Manual, 325-4L Technical 1982-85	1	83-325LTM

PART #	ELECTRICAL COMPONENTS	QTY.	REFERENCE #
54411B	Switch, 325-4L 4th Clutch Pressure 1982-85	1	8683502
54416D	Switch, 325-4L Governor Pressure 1982-85	1	8635869
84425	Solenoid, 325-4L TCC (Universal) 1982-84	1	52-0210
54425D	Solenoid, 325-4L TCC (W/Closed Loop) 1982-85	1	8635922

© Whatever It Takes Transmission Parts. Inc.

PART #	ELECTRICAL COMPONENTS (Continued)	QTY.	REFERENCE #
54425DA	Solenoid, 325-4L TCC 1982-84	1	8635966
54425DB	Solenoid, 325-4L TCC (PT, EG2, W/Gr 5.7L) 1982-85	1	8635921
54425DBK	Solenoid Kit, 325-4L TCC (1 Wire Type W/Connectors) 1982-85	1	
74444	Connector, 325-4L Case (2 Prong) 1982-85	1	12300205
74444A	Connector, 325-4L Case (3 Prong) 1982-85	1	8634383

PART #	MISC. COMPONENTS	QTY.	REFERENCE #
54487C	Grommet, 325/325-4L Shift Lever (Green) 1979-85	1	
54487DAK	Grommet Kit, 325/325-4L Shift Lever (Black, Round) 1979-85 (Contains: 1 Grommet & 1 Plastic Sleeve)	1	
44497-1	Detent Cable End, 325-4L Teardrop Style Connector (This Is The OE Style (No Slot) Cable Must Be Recrimped)	1	
54497C	Detent Cable, 325/325-4L (Overall Length 45") 1979-85	1	
54497D	Detent Cable, 325/325-4L (Overall Length 58") 1979-85	1	

PART #	HARD PARTS	QTY.	REFERENCE #
54510C	Pump Body, 325 1979-81	1	8625330
54510D	Pump Body, 325-4L 1982-85	1	8635022
54529C	Converter Reactor, 325 1979-81	1	8632011
54529D	Converter Reactor, 325-4L 1982-85	1	8635040
44530AC	Pump Gear Set, 325 (.727") 1979-81	1	
54530AA	Pump Gear Set, 325-4L (.776") 1982-85	1	
54530AB	Pump Gear Set, 325-4L (.777") 1982-85	1	
54530AC	Pump Gear Set, 325-4L (.778") 1982-85	1	
54544C	Plate, 325 Pump 1979-81	1	8655935
54545D	Housing, 325-4L 4th Clutch (Aluminum) 1982-85	1	8635911
54547A	Apply Ring, 325/325-4L Forward Clutch 1979-85	1	8628458
54548A	Apply Ring, 325/325-4L Direct Clutch 1979-85	1	8628459
54549A	Apply Ring, 325/325-4L Low/Reverse Clutch 1979-85	1	
54551D	Drum, 325-4L Overrun Clutch 1982-85	1	8635941
54554C	Drum, 325/325-4L Forward Clutch 1979-85	1	8632918
54555C	Drum, 325/325-4L Direct Clutch (6 Clutch) 1979-85	1	8630922
54560D	Piston Kit, 325-4L 4th Clutch 1982-85	1	
54561D	Piston Kit, 325-4L Overrun Clutch 1982-85	1	
54564AC	Piston Kit, 325/325-4L Forward Clutch 1979-85	1	
54565A	Piston Kit, 325/325-4L Direct Clutch 1979-85	1	
54567A	Piston Kit, 325/325-4L Low/Reverse Clutch 1979-85	1	
54580D	Planet, 325-4L Overdrive 1982-85	1	8635036
54582C	Planet, 325/325-4L Forward 1979-85	1	8632038
54584C	Planet, 325/325-4L Rear 1979-85	1	8632044
54592C	Ring Gear, 325/325-4L Forward Planet 1979-85	1	8632036
54594C	Ring Gear, 325/325-4L Rear Planet 1979-85	1	8632048
54610D	Sun Gear, 325-4L Overdrive Planet 1982-85	1	8635033
54612C	Sun Gear, 325/325-4L Forward Planet 1979-85	1	8632040
54614C	Sun Gear, 325/325-4L Rear Planet 1979-85	1	8632041
54622A	Shell, 325/325-4L Input Drum 1979-85	1	8628203
54622AH	Shell, 325/325-4L Input Drum (Hardened) 1979-85	1	
54632A	Housing, 325/325-4L Low/Reverse Clutch (Steel) 1979-85	1	8628212

PART #	SPRAGS & ONE WAY CLUTCHES	QTY.	REFERENCE #
54650D	Sprag, 325-4L Overdrive 1982-85	1	8635037
54654AA	Sprag, 325/325-4L Low Clutch (Wide) 1979-85	1	8628183
54660D	Inner Race, 325-4L Overdrive Sprag 1982-85	1	8635076
54664A	Inner Race, 325/325-4L Low Clutch Sprag 1979-85	1	8628184

PART #	HARD PARTS (Continued)	QTY.	REFERENCE #
54673D	Shaft, 325-4L Turbine 1982-85	1	8635020
54678C	Shaft, 325/325-4L Output 1979-85	1	8632540
54680C	Governor, 325 Gas 1979-81	1	8632616
54680CC	Governor, 325 Diesel 1979-80	1	8632530
54680CD	Governor, 325 Diesel 1981	1	8625534
54680D	Governor, 325-4L Diesel 1982-85	1	8635481

© Whatever It Takes Transmission Parts. Inc.

54680DG	Governor, 325-4L Gas 1982-85	1	8635480
54700C	Chain, 325 1979-81	1	8632027
54700D	Chain, 325-4L 1982-85	1	8635171
54705C	Sprocket, 325 Drive W/Shaft 1979-81	1	8632901
54705D	Sprocket, 325-4L Drive W/Overdrive Ring Gear 1982-85	1	8635087
54706C	Sprocket, 325 Driven 1979-81	1	8632026
54706D	Sprocket, 325-4L Driven 1982-85	1	8635089
54713C	Support, 325/325-4L Driven Sprocket 1979-85	1	8632015
54740C	Valve Body, 325 (Cast #) 1979-81	1	
54740D	Valve Body, 325-4L (Cast #) 19782-85	1	

PART #	VALVE BODY COMPONENTS	QTY.	REFERENCE #
54741DT-1P	Bushing & Plunger, 325-4L Throttle Valve 1982-85	1	8639937
54741DTK	Valve Assembly, 325-4L Throttle (W/Bushing, Clip, & Spring) 1982-85	1	8635944

PART #	HARD PARTS (Continued)	QTY.	REFERENCE #
64744	Housing, 325/325-4L Driven Speed-O Gear (1" Aluminum Bullitt)	1	
54755C	Channel Plate, 325 (Aluminum Case Cover) 1979-81	1	8632987
54755D	Channel Plate, 325-4L (Aluminum Case Cover) 1982-85	1	8635984
54760C	Case, 325 1979-81	1	
54760D	Case, 325-4L 1982-85	1	8635942

PART #	CASE COMPONENTS	QTY.	REFERENCE #
54761CP-1	Spring, 325 Pressure Regulator (Purple) 1979-81	1	8632551
54761CP-1A	Spring, 325 Pressure Regulator (Green) 1979-81	1	8633579
54761CP-2	Sleeve, 325 Pressure Regulator 1979-81	1	8632821
54761D-1	Plunger, 325-4L W/Plastic Insert (in Channel Plate) 1982-85	1	8635971
54761DC-1	Valve, 325-4L Converter Clutch Valve (Inside Case) 1982-85	1	8635031
54761DC-2	Bushing, 325-4L Converter Clutch Valve (Aluminum) 1982-85	1	8635074
54761DC-3	Spring, 325-4L Converter Clutch 1982-85	1	8635072
54761DP-1	Valve, 325-4L Pressure Regulator 1982-85	1	8639718
54761DP-2	Bushing, 325-4L Pressure Regulator Valve 1982-85	1	8635063
54761DP-3	Spring, 325-4L Pressure Regulator (Blue) 1982-85	1	8635210
54761DP-3A	Spring, 325-4L Pressure Regulator (Orange) 1982-85	1	8635142
54761DR-1	Valve, 325-4L Reverse Boost 1982-85	1	8635530
54761DR-2	Bushing, 325-4L Reverse Boost Valve 1982-85	1	8635535
54761DR-6	Spacer, 325-4L Regulator Valve Bushing 1982-85	1	8635067
54761DT-1	Valve, 325-4L Modulator Throttle Valve Boost 1982-85	1	8635141
54761DT-2	Bushing, 325-4L Modulator Throttle Valve Boost 1982-85	1	8635143

PART #	HARD PARTS (Continued)	QTY.	REFERENCE #
54765C	Pan, 325 Bottom 1979-81	1	8635959
54765D	Pan, 325-4L Bottom 1982-85	1	8639859
54766C	Pan, 325 Side 1979-81	1	
54766D	Pan, 325-4L Side 1982-85	1	8635964
54779B	Bolt, 325-325-4L Bottom Pan to Case 1979-85	15	
34797B	Nut, 325/325-4L Holds External Shift Lever On (Metric) 1979-85	1	
54797C	Bolt, 325/325-4L Parking Cam to Lever 1979-85	2	25527674
54846D	Retainer, 325-4L Overrun Clutch Pipe 1982-85	1	8635494
54846DA	Retainer, 325-4L Converter Clutch Pipe 1982-85	1	8635239
54846DB	Retainer, 325-4L D-2 Signal Pipe 1982-85	1	8635496
54846DC	Retainer, 325-4L 4-3 Pipe 1982-85	1	8635246
54861B	Snap Ring, 325-4L Holds 4th Clutches in Housing 1982-85	1	9634158
54862B	Snap Ring, 325-4L Holds 4th Clutch Retainer in 1982-85	1	8634023
54864B	Snap Ring, 325-4L Holds Overrun Clutch in Drum 1982-85	1	8634056
54865B	Snap Ring, 325-4L Holds Overdrive Sprag Inner Race in 1982-85	1	8634274
54867B	Snap Ring, 325-4L Holds Overdrive Planet Pins in Planet 1982-85	1	8634143
54876A	Snap Ring, 325/325-4L Holds Pressure Plate in Forward Drum 1979-85 (Also Fits Direct)	1-2	8628089
54877A	Snap Ring, 325/325-4L Holds Spring & Retainer in Forward Drum 1979-85	1	8628153
54878A	Snap Ring, 325/325-4L Holds Pressure Plate in Direct Drum 1979-85 (Use 54876A)	1	8628089
54879A	Snap Ring, 325/325-4L Holds Retainer in Direct Drum 1979-85	1	8628059
54880B	Snap Ring, 325-4L Holds Overdrive Planet to Turbine Shaft 1982-85	1	8634039
54883A	Snap Ring, 325/325-4L Holds Low/Reverse Clutch Housing to Case 1979-85	1	8628210
54884A	Snap Ring, 325/325-4L Holds Shell to Sun Gear 1979-85	1	8623105
44887	Snap Ring, 325/325-4L Speed-O Housing to Seal 1979-85	1	
54891D	Snap Ring, 325/325-4L Holds Bearing to Drive Sprocket 1979-85	1	8625484

© Whatever It Takes Transmission Parts. Inc.

PART #	HARD PARTS (Continued)	QTY.	REFERENCE #
54892A	Snap Ring, 325/325-4L Holds Low/Reverse Pressure Plate to Case 1979-85	1	8628184
54894A	Snap Ring, 325/325-4L Holds Front Planet to Output Shaft 1979-85	1	8628170
54895D	Snap Ring, 325/325-4L Holds Bearing to Driven Sprocket 1979-85	1	8625020
54898D	Snap Ring, 325/325-4L Holds Bearing to Drive Sprocket Support 1979-85	1	8635044
54899C	Snap Ring, 325/325-4L Holds Bearing to Driven Sprocket Support 1979-85	1	11500695
54905C	Servo Cover, 325/325-4L Intermediate 1979-85	1	8657213
54907A	Piston, 325/325-4L Intermediate Servo W/Seal 1.93"OD (Inner) 1979-85	1	8632980
S54907AF	Nylon Bushing, 325/325-4L Intermediate (Sonnax)(15 Per Kit) 1979-85	1	6578-01
54907DC	Piston, 325-4L Intermediate Servo (3rd Design W/Rubber Seal)(Inner) 1982-85	1	8638942
T54908	Pin, 325/325-4L Intermediate Servo (Extendo)(Teckpak) 1979-85	1	65786E
54908AA	Pin, 325/325-4L Intermediate Servo (1 Groove) 1979-85	1	8630125
54908AB	Pin, 325/325-4L Intermediate Servo (2 Groove) 1979-85	1	8630126
54908AC	Pin, 325/325-4L Intermediate Servo (3 Groove) 1979-85	1	8630127
54908C	Pin, 325/325-4L Intermediate Servo (No Groove) 1979-85	1	8630128
54912B	Piston, 325/325-4L Intermediate Servo (Outer) 2.675"ID Cover 1979-85	1	8639264
54925D	Accumulator Assembly, 325-4L 1-2 & 3-4 Accumulator 1982-85	1	
54926C	Spring, 325 1-2 Accumulator (Red) 1979-81	1	8630885
54926D	Spring, 325-4L 1-2 Accumulator (Green) 1982-85	1	8635148
54926DA	Spring, 325-4L 1-2 Accumulator (Purple) 1982-85	1	8635150
54927D	Piston, 325-4L 1-2 Accumulator 1982-85	1	
54928D	Pin, 325-4L 1-2 Accumulator 1982-85	1	8635708
54929D	Housing, 325-4L 1-2 Accumulator 1982-85	1	8635935
54936D	Spring, 325-4L 3-4 Accumulator (Blue) 1982-85	1	8635277
54936DA	Spring, 325-4L 3-4 Accumulator (White) 1982-85	1	8635702
54936DB	Spring, 325-4L 3-4 Accumulator (Yellow) 1982-85	1	8635701
54936DC	Spring, 325-4L 3-4 Accumulator (Orange) 1982-85	1	8635147
54936DD	Spring, 325-4L 3-4 Accumulator (Light Green/Violet) 1982-85	1	8639858
54936DE	Spring, 325-4L 3-4 Accumulator (Green) 1982-85	1	8639074
54937D	Piston, 325-4L 3-4 Accumulator 1982-85	1	
54938D	Pin, 325-4L 3-4 Accumulator 2.30" Long 1982-85	1	8635708
54938DA	Pin, 325-4L 3-4 Accumulator 2.10" Long 1982-85	1	8635167
S74938X	Accumulator Pin Kit, 325-4L 1982-85 (Sonnax)	1	77999
S74938XK	Accumulator Pin & Reamer Kit, 325-4L 1982-85 (Sonnax)	1	77999-02K
54960B	Piston, 325-4L 4th Clutch 1981-Up	1	
54961B	Piston, 325-4L Overrun Clutch 1982-85	1	8635028
54964BB	Piston, 325/325-4L Forward Clutch 1979-85	1	8628971
54965A	Piston, 325/325-4L Direct Clutch 1979-85	1	
54967A	Piston, 325/325-4L Low/Reverse Clutch 1979-85	1	8678938
54970B	Spring W/Retainer, 325-4L 4th Clutch Return	1	
54971B	Wave Spring, 325-4L Overrun Clutch Return 1982-85	1	8634022
54974A	Spring W/Retainer, 325/325-4L Forward Clutch Return 1979-85	1	8628492
54975A	Spring W/Retainer, 325/325-4L Direct Clutch Return 1979-85	1	
54977A	Return Spring, 325/325-4L Low/Reverse Clutch 1979-85	1	8628222
54981B	Retainer, 325-4L Overrun Spring 1982-85	1	
54985A	Spring Guide, 325/325-4L Direct Clutch Return 1979-85	1	8630195
54987A	Retainer, 325/325-4L Low/Reverse Clutch Return Spring 1979-85	1	8628223
54991C	Linkage Assembly, 325 Internal 1979-81	1	
54991C-2	Spring, 325 Manual Detent W/Roller 1979-81	1	8632081
54991C-7	Cam, 325 Parking Lock 1979-81	1	8632078
54991C-8	Nut, 325/325-4L Manual Link (Push-On) 1979-85	1	11501937
54991D	Linkage Assembly, 325-4L Internal 1982-85	1	
54991D-2	Spring, 325-4L Manual Detent W/Roller 1982-85	1	8635048
54991D-5	Strut, 325-4L Parking Lock 1982-85	1	8635047
54992C	Shift Lever, 325 External 1979-81	1	6432920
54992D	Shift Lever, 325-4L External W/Hole For Grommet 1982-85	1	8635143
54992DA	Shift Lever, 325-4L External W/Stud at Top 1982-85	1	8635918
54991C-7	Manual Link, 325 For Manual Valve 1979-81	1	
54991D-7	Manual Link, 325-4L For Manual Valve 1982-85	1	8635237
54995C	Park Pawl Assembly, 325/325-4L 1979-85	1	
54997C	T.V. Bracket Assembly, 325/325-4L 1979-85	1	
54997C-7	Wire Link, 325 Detent Cable 1979-81	1	8632541
54999D	Tube Set, 325-4L 1982-85	1	

© Whatever It Takes Transmission Parts. Inc.

Technical Bulletin #972

Transmission: *325-4L*
Subject: *Pin Locaation in Case*
Application: *GM*
Issue Date: *November, 2005*

325-4L

Pin Location in Case

The pin is used for preventing the PR Bushing form rotating off location is located in this illustration. If the pin is lost the **replacement pin from GM Part# 9437415 is no longer available.** The pin measurements are 5.6 x 2.85 mm long.

Note: Make sure the bushing bore is clean and no burrs are present. When installed, the flat portion of the bushing will be indexed to the pin. Make sure the pin sets 0.3mm below the case surface and that it does not fall out before assembly.

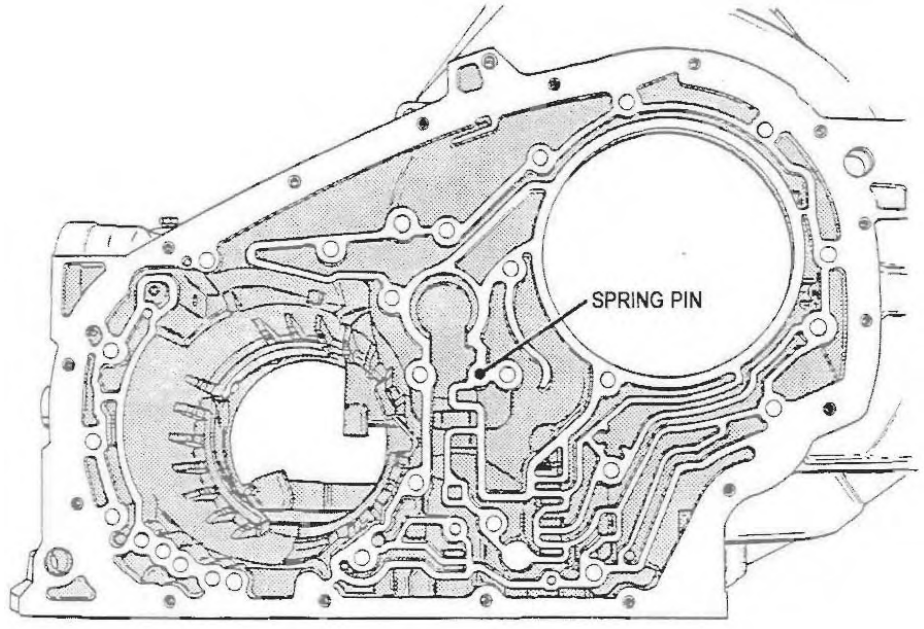

Copyright © 2005 ATRA. All Rights Reserved.

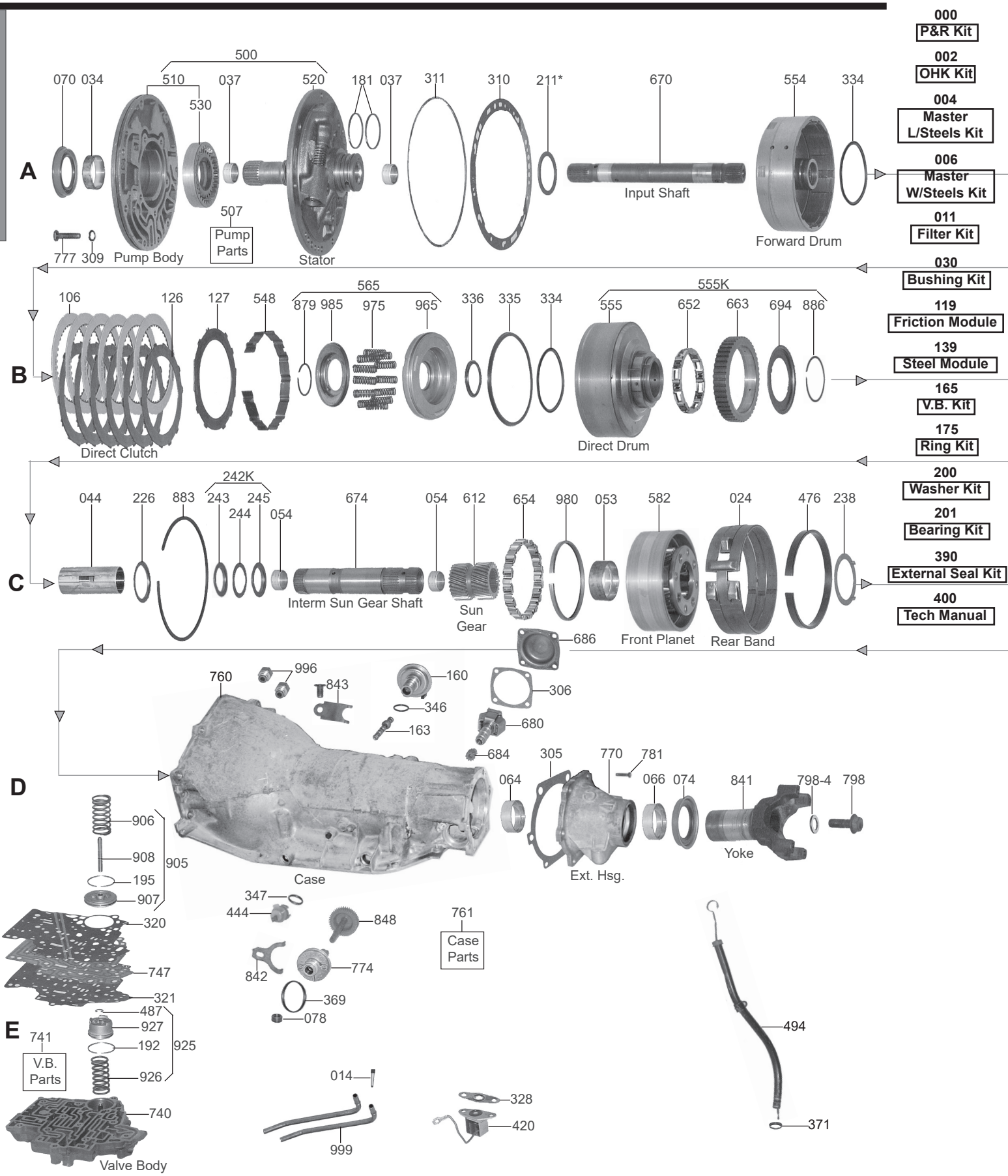

000 P&R Kit
002 OHK Kit
004 Master L/Steels Kit
006 Master W/Steels Kit
011 Filter Kit
030 Bushing Kit
119 Friction Module
139 Steel Module
165 V.B. Kit
175 Ring Kit
200 Washer Kit
201 Bearing Kit
390 External Seal Kit
400 Tech Manual

© Whatever It Takes Transmission Parts. Inc.

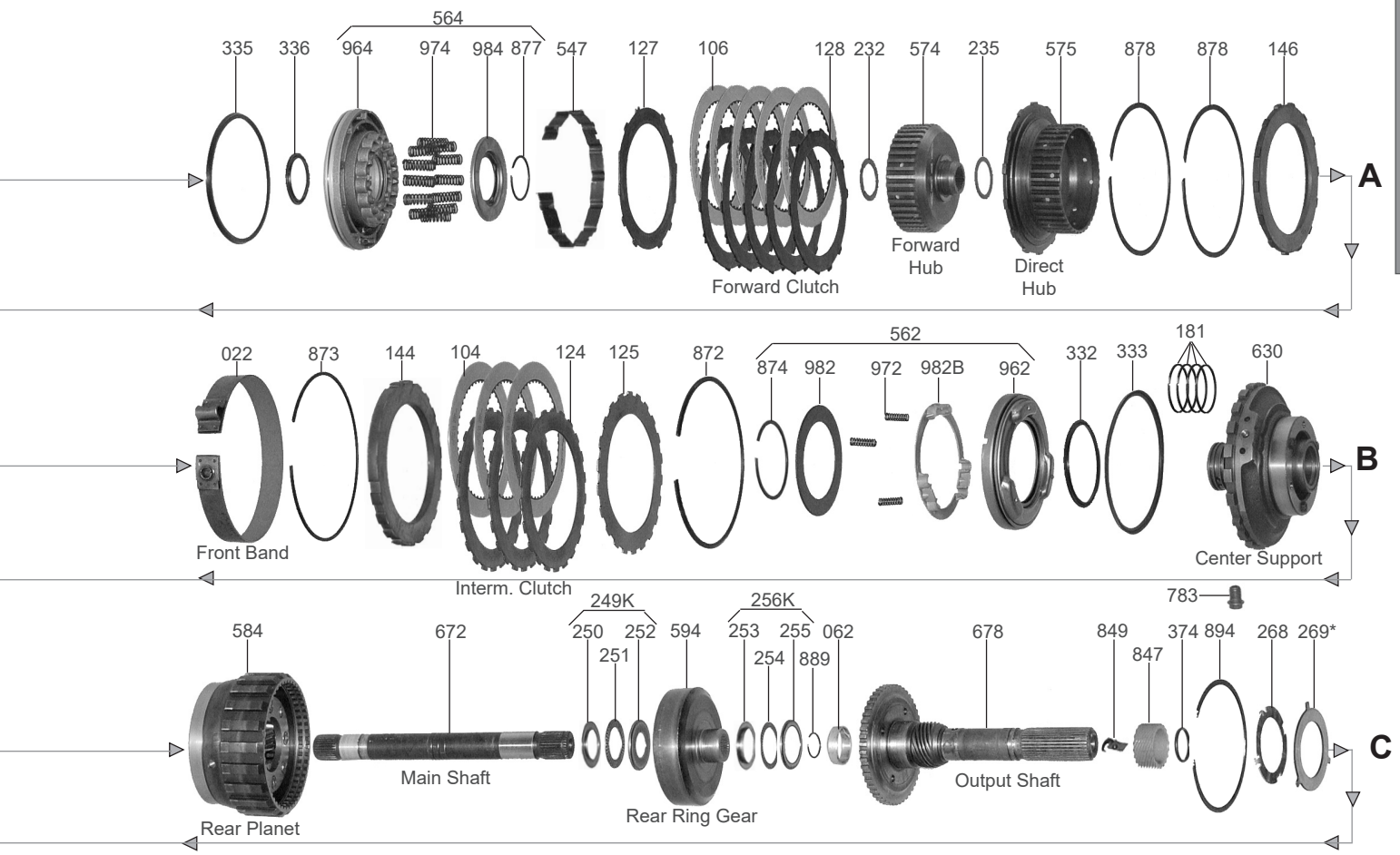

© Whatever It Takes Transmission Parts. Inc.

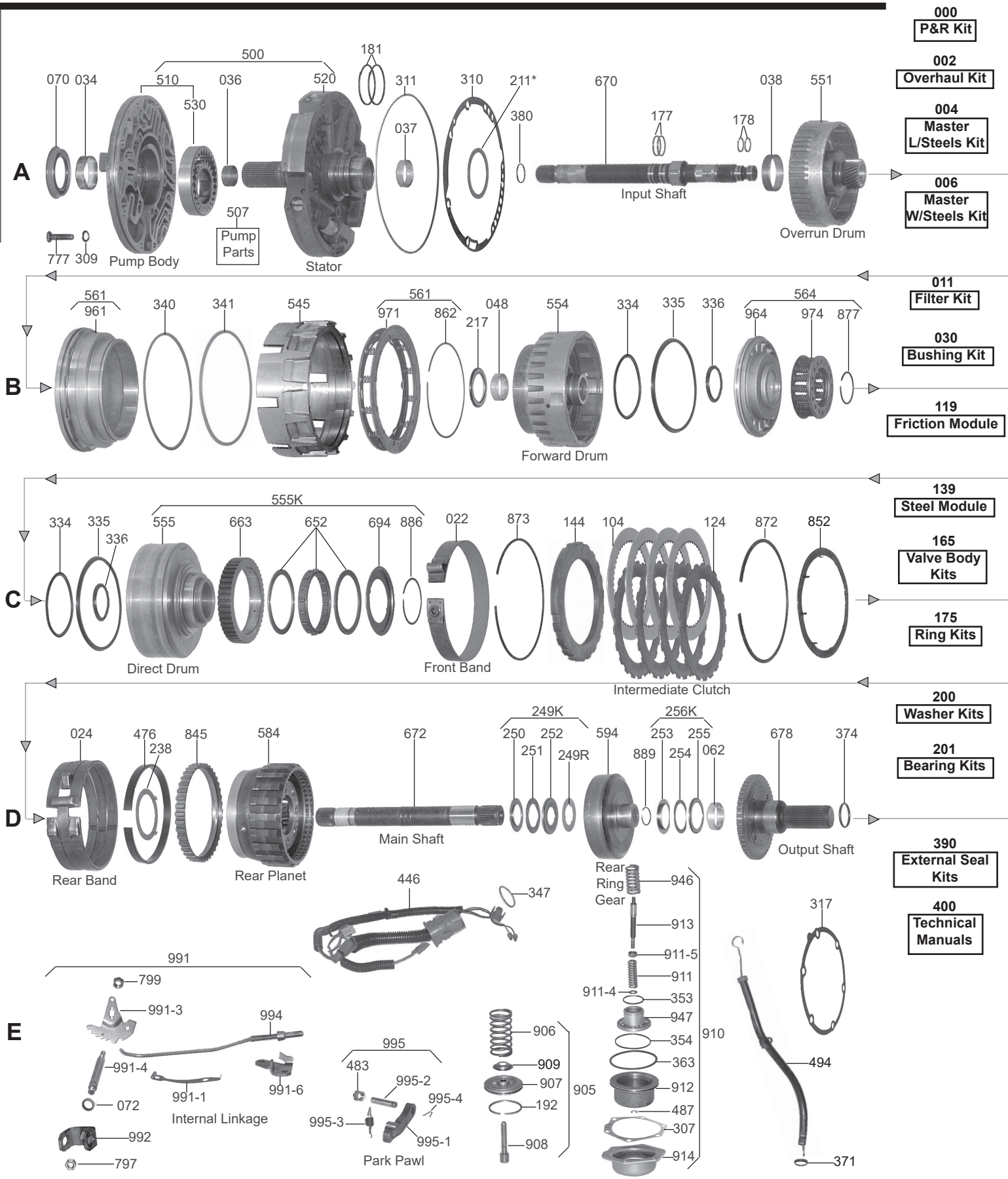

000 P&R Kit

002 Overhaul Kit

004 Master L/Steels Kit

006 Master W/Steels Kit

011 Filter Kit

030 Bushing Kit

119 Friction Module

139 Steel Module

165 Valve Body Kits

175 Ring Kits

200 Washer Kits

201 Bearing Kits

390 External Seal Kits

400 Technical Manuals

© Whatever It Takes Transmission Parts. Inc.

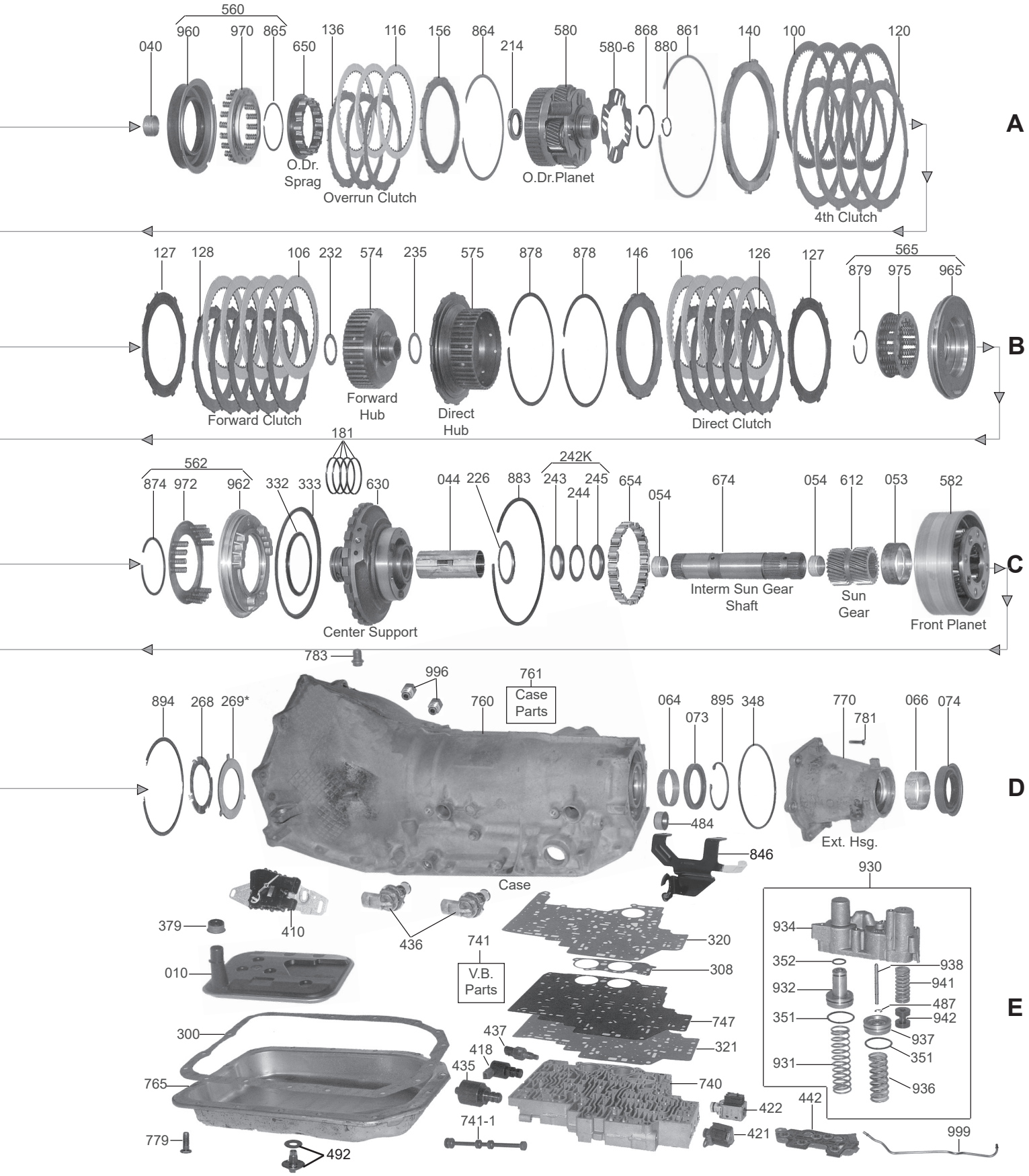

© Whatever It Takes Transmission Parts. Inc.

PART #	PAPER & RUBBER KIT	QTY.	REFERENCE #
34000	Paper & Rubber Kit, 400 1965-Up	1	
34000E	Paper & Rubber Kit, 4L80E 1991-Up	1	
34000G	Paper & Rubber Kit, 425 1966-78	1	

PART #	OVERHAUL KIT	QTY.	REFERENCE #
34002	Overhaul Kit, 400 (Short Ring Kit) 1965-Up	1	
34002A	Overhaul Kit, 400 (Full Ring Kit) 1965-Up	1	
34002E	Overhaul Kit, 4L80E/4L85E 1991-Up (For Bonded Pistons Sell A34960EK)	1	
34002EA	Overhaul Kit, 4L80E 1997-Up (Without Pan Gasket)(For Bonded Pan Gasket Use 34300EW)	1	
34002G	Overhaul Kit, 425 1966-78	1	

PART #	MASTER L/STEEL KIT	QTY.	REFERENCE #
34004	Master L/Steel Kit, 400 (Short Ring Kit) 1965-Up	1	
34004A	Master L/Steel Kit, 400 (Full Ring Kit) 1965-Up	1	
34004B	Master L/Steel Kit, 400 (Short Ring Kit)(W/Waffle Frictions) 1965-Up	1	
34004C	Master L/Steel Kit, 400 (Full Ring Kit)(W/Waffle Frictions) 1965-Up	1	
34004E	Master L/Steel Kit, 4L80E 1991-95 (For Bonded Overrun Piston Sell A34960E)	1	
34004EA	Master L/Steel Kit, 4L80E/4L85E 1996-Up (For Bonded Pistons Sell A34960EK)	1	
34004G	Master L/Steel Kit, 425 1966-78	1	

PART #	MASTER W/STEEL KIT	QTY.	REFERENCE #
34006	Master W/Steel Kit, 400 (Short Ring Kit) 1965-Up	1	
34006A	Master W/Steel Kit, 400 (Full Ring Kit) 1965-Up	1	
34006B	Master W/Steel Kit, 400 (Short Ring Kit)(W/Waffle Frictions) 1965-Up	1	
34006C	Master W/Steel Kit, 400 (Full Ring Kit)(W/Waffle Frictions) 1965-Up	1	
34006E	Master W/Steel Kit, 4L80E 1991-95 (For Bonded Overrun Piston Sell A34960E)	1	
34006EA	Master W/Steel Kit, 4L80E/4L85E 1996-Up (For Bonded Pistons Sell A34960EK)	1	
34006G	Master W/Steel Kit, 425 1966-78	1	

PART #	FILTER	QTY.	REFERENCE #
34010	Filter, 400 1964-E67	1	5579822
34010A	Filter, 400 Flat (Felt) L1967-Up	1	6438348
34010B	Filter, 400 Flat (Brass) L1967-Up	1	
34010E	Filter, 4L80E 1991-96	1	8678757
34010EA	Filter, 4L80E 1997-Up	1	24204277
34010G	Filter, 425 1966-78	1	6438336

PART #	FILTER KIT	QTY.	REFERENCE #
34011	Filter Kit, 400 1964-E67	1	
34011A	Filter Kit, 400 Flat (Felt) L1967-Up	1	
34011B	Filter Kit, 400 Flat (Brass) L1967-Up	1	
34011E	Filter Kit, 4L80E 1991-96	1	
34011EW	Filter Kit, 4L80E (Bonded Gasket) 1991-96	1	
34011EJ	Filter Kit, 4L80E (Jaguar) 1991-96	1	
34011EA	Filter Kit, 4L80E 1997-UP	1	
34011EAW	Filter Kit, 4L80E (Bonded Gasket) 1997-UP	1	
34011G	Filter Kit, 425 1966-78	1	

PART #	MISC. FILTERS	QTY.	REFERENCE #
34016	Screen, 4L80E TCC/PWM Solenoid (Thimble Type) 1991-Up	1	8661834
54016B	Filter, 400 Governor (Tapered) 1964-Up	1	8627509
34018	Screen, 4L80E Force Motor/Pressure Control 1991-Up	1	8685041
34018A	Screen, 4L80E Shift Solenoid 1991-Up	1	8661709

PART #	BANDS	QTY.	REFERENCE #
34022	Band, 400/425 Front (1” Wide) 1964-Up (Also Fits 4L80E 1991-98)	1	8623123
34022HD	Band, 4L80E Front (Heavy Duty) (1.25” Wide) 1999-Up	1	24210080
34024	Band, 400 Rear (Reverse) (Grooved Lining) 1964-Up (Can Use 34024E)	1	8681820
34024E	Band, 400/4L80E Rear (Reverse)(New Design)(Smooth Lining) 1991-Up	1	8677313

© Whatever It Takes Transmission Parts. Inc.

PART #	BUSHINGS	QTY.	REFERENCE #
34030	Bushing Kit, 400 1964-Up	1	
34030E	Bushing Kit, 4L80E (W/Center Support Bushing # 34044) 1991-E97	1	
34030EA	Bushing Kit, 4L80E L1997-Up (Does Not Come With Extension Housing Bushing #34066D)	1	
44034	Bushing, 400 Pump 1964-Up	1	8623940
34034A	Bushing, 400 Pump (After Market) 1964-Up	1	
34034B	Bushing, 4L80E Pump (OE Style)(.550” Wide) 1991-96	1	8682195
34034BA	Bushing, 4L80E Pump (Bronze) (.695” Wide) 1997-Up (.061” Thick)	1	
34034BB	Bushing, 4L80E Pump (Teflon Coated W/Indents) 1997-Up (2.125”OD)(.700”Wide)(.064”Thick)	1	
34034BC	Bushing, 4L80E Pump Body (Bronze)(.700”Wide) 1997-Up (Also Fits 4L85E 1991-Up)	1	
34034C	Bushing, 4L80E Pump (Bronze)(Must Be Fitted) 1997-Up	1	
34036B	Bushing, 4L80E Stator Support (Front) 1991-Up	1	8683008
34036BA	Bushing, 4L80E Stator Support (Front) 91-Up (We Have These Made For Us, They Fit Better Than The 34036B	1	
S34036B	Bushing, 4L80E Stator Support (Front)(Extra Wide) 1991-Up (Sonnax)	1	34016-W
34037	Bushing, 400 Stator Support (Front & Rear), 400/4L80E Sun Gear Shaft, 4L80E Overrun Drum (Rear, Small) 1964-Up	3-5	8623944
34037B	Bushing, 4L80E Stator Support (Rear) 1991-Up	1	8681614
34038	Bushing, 4L80E Overrun Drum (Front) 2.001”OD 1991-Up	1	8661604
34040	Bushing, 4L80E Overrun Drum (Rear) 1991-Up (Use 34037)	1	8623944
34044	Bushing, 400 Center Support (3.525” Long) 1964-Up	1	8623942
34044A	Bushing, 400 Center Support (After Market) 1964-Up	1	
34044B	Bushing, 4L80E Center Support (3.525” Long) 1991-E97 (Also Fits 400 1964-Up)	1	8655622
34044C	Bushing, 4L80E Center Support (4.020” Long) L1997-Up	1	
34048	Bushing, 4L80E Forward Drum 1991-11	1	8661284
34053	Bushing, 400/4L80E Front Planet 1964-Up	1	8623192
34053C	Bushing, 400/4L80E/4L85E Front Planet (Coated) 1964-Up	1	
34054	Bushing, 4L80E Sun Gear Shaft (No Groove) 1991-Up (Use 34037)	2	8623944
34054A	Bushing, 4L80E Sun Gear Shaft (.502” Long)(With 4 ID Grooves) 1997-Up	2	
34054AB	Bushing, 4L80E/4L85E Sun Gear Shaft (W/4 ID Grooves)(.480”Wide)(Bronze) 1991-Up	2	
34062	Bushing, 400 Output Shaft (Wide) 1964-74	1	8623943
34062B	Bushing, 400/4L80E Output Shaft (Narrow) 1975-11	1	8653985
34064	Bushing, 400 Case 1964-Up	1	8623941
34064B	Bushing, 4L80E Case (OE Style) 1991-Up	1	8677221
S34064BA	Bushing, 400/4L80E Case (No Walk Out) 1964-Up (Sonnax)	1	34006-SP
34064BC	Bushing, 4L80E Case (OE Style)(Bronze) 1993-Up	1	
34064C	Bearing Kit, 400 (Replaces Case Bushing) 1964-Up	1	
34064G	Bushing, 425 Governor Bore 1966-78	1	
34066	Bushing, 400 Extension Housing (1.995”OD) 1 1/2” long 1964-Up	1	8623966
44066	Bushing, 400/375 Extension Housing (1.500”ID)(Babbit)	1	
44066B	Bushing, 400/375 Extension Housing (1.500”ID)(Bronze)	1	
34066A	Bushing, 400 Extension Housing (1.795”OD) 1 1/4” long 1964-Up	1	8619943
34066B	Bushing, 400 Extension Housing (1.995”OD) 1” long 1964-Up	1-2	8626901
34066C	Bushing, 4L80E Extension Housing (2.020”OD)(1.895”ID)(1.000” Long) 1991-Up	1	8661368
34066D	Bushing, 4L80E Extension Housing (2.025”OD)(1.895”ID)(1.100” Long) 2004-Up	1	
34066DA	Bushing, 4L80E Ext Hsg (2.025”OD)(1.895”ID)(1.100”Long) 2004-Up	1	
34066H	Bearing, 4L80E Extension Housing (Heavy Duty Application) 1991-Up	1	8670754

PART #	METAL CLAD SEALS	QTY.	REFERENCE #
44070	Seal, 400/425 Front 1964-Up	1	8641826
34070E	Seal, 4L80E Front 1991-Up	1	8661602
44072	Seal, 400/4L80E Linkage Shaft 1964-Up	1	8623056
34073E	Seal, 4L80E Case 1991-Up	1	8675517
34074	Seal, 400/4L80E Rear (2.705”OD) 1.875”ID (Truck Type) (With Boot) 1964-Up	1	8626009
34074A	Seal 400/4L80E Rear (2.705”OD) 1.875”ID (Truck Type)(Without Boot) 1964-Up	1	
36074	Seal, 400 Rear 1 11/16”ID (Medium, Car Type) 1964-Up	1	8625892
44074	Seal, 400 Rear (Small, 375 Type) 1964-Up	1	3871649
44074C	Seal, 400 Rear (Small, 375 Type)(With Flange) With Short Boot	1	
34074E	Seal, 475 Rear 2.887”OD(2.100”ID) 1984-Up (Can Use 34074EA)	1	8655032
34074EA	Seal, 4L80E Rear 2.887”OD(2.100”ID)(Double Lip) 1991-Up	1	8675731
34074EB	Seal, 4L80E Rear (1.875”ID)(Truck Type)(W/Boot) 1991-Up	1	8677463
44078A	Seal, 400 Speed-O Shaft (W/Spring) 1964-Up	1	25519078
44078X	Seal, 400 Speed-O Shaft (W/Out Spring) 1964-Up	1	1240382
34079	Seal, 4L80E Cooler Line Fitting to Center Support 1991-Up)	1	24203511

PART #	FRICTION CLUTCH	QTY.	REFERENCE #
34100	Friction, 4L80E 4th Clutch (.080”) 1991-Up	4	8682802
34100HP	Friction, 4L80E 4th Clutch (.080”) Hi-Performance 1991-Up (Blue Plates)	4	
34100HPPK	Friction/Steel Kit, 4L80E 4th Clutch 1990-Up (High Performance)	1	

© Whatever It Takes Transmission Parts. Inc.

PART #	FRICTION CLUTCH (Continued)	QTY.	REFERENCE #
34104	Friction, 400/425 Intermediate Clutch (.080") (Waved) 1964-Up	3	8655620
34104D	Friction, 400/4L80E Intermediate Clutch (.080")(High Energy) 1964-95	3	
34104E	Friction, 4L80E Intermediate Clutch (.080") (Flat) 1991-95	3	8675521
34104EA	Friction, 4L80E Intermediate Clutch (.070") (High Energy) 1996-Up	4-5	24242966
34104EAHP	Friction, 4L80E Intermediate Clutch (.070") (Generation II)(High Performance) 1996-Up	4-5	
34104EAS1	Friction, 4L80E Intermediate Clutch (.070") (Stage 1) 1996-Up	4-5	24202966
A34104EPK	Friction & Steel Kit, 4L80E Intermediate Clutch (.080") (Flat)(W/Snap Ring) 1991-Up (Alto)	1	
A34104EPPK	Friction & Steel Kit, 4L80E Intermediate Clutch (.080") (Flat)(Hi-Perf.) 1991-Up (Alto)	1	
A34104HD	Friction, 400 Intermediate Clutch (.090") (Heavy Duty) 1964-Up	3	
34104HP	Friction, 400 Intermediate Clutch (.080") (Hi-Performance) 1964-Up	3	
A34104PPK	Friction & Steel Kit, 400 Intermediate Clutch (.062") (Hi-Performance) 1964-Up (Alto)	1	
34106S1	Friction, 400/425 Intermediate Clutch (.080") (Stage 1) 1964-Up	1	
34104W	Friction, 400 Intermediate Clutch (.080") (Waffle) 1964-Up	3	8623151
34106	Friction, 400/425/4L80E Forward & Direct Clutch (.080") (Smooth) 1964-Up	10-11	8655619
34106AHP	Friction, 400/425/4L80E Forward (.059"Thick)(Smooth)(Exedy)	10-11	
34106AAHP	Friction, 400/425/4L80E Direct (.062" Thick)(Smooth)(Exedy)	10-11	
34106AHPK	Friction Kit, 400 Forward & Direct Clutch (.061") (Hi-Performance)(6 Per Kit) 1964-Up (Alto)	1	
34106APPK	Friction/Steel Kit, 400 Forward Clutch (Hi-Perf.) (Red W/Pressure Plate) (Alto) 1964-Up	1	
34106BPPK	Friction/Steel Kit, 400/4L80E Direct Clutch (Hi-Perf.) (Red W/Pressure Plate) (Alto) 1964-Up	1	
34106E	Friction, 4L80E Forward & Direct Clutch (High Energy)(Graphite) 1996-Up	10-11	24202646
34106EH	Friction, 4L80E Forward & Direct Clutch (GPZ)(Heavy Duty) 1996-Up	10-11	
34106EPPK	Friction/Steel Kit, 4L80E Forward Clutch (Hi-Perf.) (Red W/Pressure Plate) (Alto) 1991-Up	1	
34106G	Friction, 400 Forward & Direct Clutch (.080") (Radial Grooved) 1964-Up	10-11	
34106HD	Friction, 400 Forward & Direct Clutch (.080") (Waffle)(Heavy Duty) 1964-Up	10-11	8625300
34106HP	Friction, 400/4L80E Forward & Direct Clutch (.080") (Hi-Perf.) 1964-Up	10-11	
34116	Friction, 4L80E Overrun Clutch (.080") 1991-Up	3	8661571
34116HP	Friction, 4L80E Overrun CLutch (.080") (Hi-Perf.) 1991-Up (Not Blue)	3	
34119	Friction Module, 400 1964-Up	1	
34119E	Friction Module, 4L80E 1991-95	1	
34119ES1	Friction Module, 4L80E (Stage 1) 1991-95	1	
34119EA	Friction Module, 4L80E (With Hi-Energy Forward, Direct, & Intermediate) 1996-Up	1	
34119EAHP	Friction Module, 4L80E (Generation II) 1996-Up	1	
34119EAS1	Friction Module, 4L80E (Stage 1) 1996-Up	1	
34119HP	Friction Module, 400 (Hi-Performance, Indy Reds) 1964-Up (Allomatic)	1	
34119S1	Friction Module, 400 (Stage 1) 1964-Up	1	

PART #	STEEL CLUTCH	QTY.	REFERENCE #
34120	Steel, 4L80E 4th Clutch (.099") 1991-Up	4	8661579
34120B	Steel, 4L80E 4th Clutch (Turbulator) 1997-Up	4	
34124	Steel, 400/425 Intermediate Clutch (.100") (Flat) 1964-Up	3	8655621
34124E	Steel, 4L80E Intermediate Clutch (.076") 1991-Up	4	8675522
34124H	Steel, 4L80E Intermediate Clutch (.076") (Kolene) 1991-Up	4	
34125	Steel, 400/4L80E Intermediate Clutch (.070") (Waved) 1964-Up	1	8624199
34126A	Steel, 400/425/4L80E Direct Clutch (.090") 1964-Up	4	8625197
34126B	Steel, 400/425/4L80E Forward & Direct Clutch (.060") (Commercial) 1964-Up	AR	
34126BAK	Steel Kit, 400/4L80E Forward & Direct (.060") Kolene (6 Per Kit) 1964-95	1	
34126D	Steel, 400/425/4L80E Forward & Direct Clutch (.090") (Kolene) 1964-Up	8	
34127	Steel, 400 Forward & Direct Clutch (.060") (Waved) 1967-Up	1	8679940
34127A	Steel, 400 Forward & Direct Clutch (.068") (Waved) 1964-66	1	8623113
34127D	Steel, 400/4L80E Forward & Direct Clutch (.054") (Dished) 1964-97	1	8680816
34127DA	Steel, 4L80E Forward & Direct Clutch (.054") Dished (5.980"OD)	1	
34127E	Steel, 4L80E Forward & Direct Clutch (.042")(12 Teeth)(8 Waves) 1997-Up	1	24205559
34127EA	Steel, 4L80E Forward & Direct Clutch (.042")(6 Teeth)(7 Waves) 1997-Up	1	24205560
34127EB	Steel, 4L80E Forward & Direct Clutch (.042")(14 Teeth)(6 Waves) 1997-Up	1	
34128	Steel, 400/425/4L80E Forward Clutch (.077") (Flat) 1964-Up	5	8623849
34128B	Steel, 400/425/4L80E Forward Clutch (.077") (Flat)(Kolene) 1964-Up	5	
34128C	Steel, 400/4L80E Forward Clutch (Turbulator) (.068") 1964-Up	5	
34136	Steel, 4L80E Overrun Clutch (.099") 1991-96	3	9661569
34136B	Steel, 4L80E Overrun Clutch (Turbulator) 1997-Up	3	24204287
34139	Steel Module, 400 1964-Up	1	
34139G	Steel Module, 425 1966-78	1	
34139E	Steel Module, 4L80E 1991-96	1	
34139EB	Steel Module, 4L80E (W/Turbulator Plates) 1997-Up	1	

© Whatever It Takes Transmission Parts. Inc.

PART #	CLUTCH PRESSURE PLATES	QTY.	REFERENCE #
34140	Pressure Plate, 4L80E 4th Clutch (8 lugs) 1991-96	1	8661582
34140B	Pressure Plate, 4L80E 4th Clutch (2 lugs) 1997-Up	1	24205818
34144	Pressure Plate, 400 Intermediate Clutch (.431") 1964-Up	1	8623152
34144B	Pressure Plate, 4L80E Intermediate Clutch (.366") 1991-98	1	8675519
34144C	Pressure Plate, 4L80E Intermediate Clutch (.275") 1999-Up	1	24205827
34146	Pressure Plate, 400/4L80E Direct Clutch 1964-Up	1	8661575
34146B	Pressure Plate, 4L80E Direct Clutch 1991-Up (Can Use 34146)	1	8675557
34156	Pressure Plate, 4L80E Overrun Clutch 1991-Up	1	8661573

PART #	MODULATORS	QTY.	REFERENCE #
T34160	Modulator, 400 Mechanical Cable Operated (Teckpak)	1	
44160B	Modulator, 400 Black/Red Stripe 1964-Up	1	3035518
44160D	Modulator, 400 Red Stripe (Dual) 1964-Up	1	
44160J	Modulator, 400 Jeep 1964-Up	1	
44160R	Modulator, 400 Red Stripe (Single) 1964-Up	1	3035519
84160R	Modulator, 400 Red Stripe (Universal)(Dual) 1964-Up	1	
44160X	Modulator, 400 Black (Large Can) 1964-Up	1	
34161K	Adapter Assembly, 400 (AMC/Jeep) Modulator, Elbow, Brackets, Pin (Fits Early Model Jeep 4x4 Elbows, Keeps Modulator Away From Drive Shaft)	1	
44162	Hose, 400 Modulator 1964-Up	1	
34163	Valve, 400 Under Modulator 1964-Up	1	

PART #	VALVE BODY KITS	QTY.	REFERENCE #
S34165	Valve Body Kit, 400 1964-Up (Superior)	1	K-400
T34165	Valve Body Kit, 400 1964-Up (Transgo)	1	SK400
A34165-5	Valve Body Kit, 400 1964-Up (Fixes 5 Transmissions) Translab	1	
T34165A	Valve Body Kit, 400 (Reverse Cushion Kit) 1964-Up (Transgo)	1	400RK
S34165AA	Valve Body Kit, 400 (W/Plate) 1964-Up (Superior)	1	K-400-WP
S34165E	Valve Body Kit, 4L80E 1991-Up (Superior)	1	K4L80E
T34165E	Valve Body Kit, 4L80E 1991-Up (Transgo)	1	SK4L80E
T34165ED	Ring Kit, 4L80E Ring & End Play Kit 1991-Up (Transgo)	1	4L80E-HTRK
T34165G	Valve Body Kit, 425 1966-78 (Transgo)	1	SK425
A34169	Valve Body Kit, 400 (2 Stage Pac) 1964-Up (Fairbanks)	1	20806-2
T34169	Reprogramming Kit, 400 (Heavy Duty & Competition) 1964-Up (Transgo)	1	400-1&2
A34169E	Valve Body Kit, 4L80E (Powertow, Heavy Duty Competition)(Fairbanks)(With 3 Levels Of Performance)	1	
T34169E	Reprogramming Kit, 4L80E (Heavy Duty & Competition) 1991-Up (Transgo)	1	4L80E-HD2
A34171	Valve Body Kit, 400 (Transaction Kit) 1964-Up (Fairbanks)	1	20812
T34171	Reprogramming Kit, 400 (Pro Race/Heavy Duty/Super Show Off) (Transgo)	1	
T34173	Reprogramming Kit, 400 (Competition Stick Shift) 1964-Up (Transgo)	1	400-3
T34173E	Reprogramming Kit, 4L80E (Competition Stick Shift) 1991-Up (Transgo)	1	4L80E-3

PART #	OIL SEALING RINGS	QTY.	REFERENCE #
34175	Ring Kit, 400/425 Short (Pump & Center Support)(Metal) 1964-Up	1	
34175T	Ring Kit, 400/425 Short (Pump & Center Support)(Teflon) 1964-Up	1	
34175A	Ring Kit, 400/425 Full (Metal) 1964-Up	1	
34175AT	Ring Kit, 400/425 Full (Teflon) 1964-Up	1	
34175BT	Ring Kit, 400/425 Full (Teflon, W/Metal Pump Rings) 1964-Up	1	
34175ET	Ring Kit, 4L80E 1991-Up (Teflon) (With Solid Pump & Center Support Rings)	1	
34175PT	Ring Kit, 4L80E (With Peek Rings) (Teflon) 1998-Up (Retro Fits To 1991) (With Scarf Cut Pump & Center Support Rings)	1	
34177BT	Ring, 4L80E Turbine Shaft to Stator Support (Teflon) 1991-Up	2	8637170
34178	Ring, 400 Turbine Shaft (W/Variable Pitch)(Metal) 1964-67	1	8623296
34178BT	Ring, 4L80E Turbine Shaft to Forward Drum (Teflon) 1991-Up	2	8661893
34181	Ring, 400/425 Stator & Center Support (Metal) 1964-88	6	8623148
34181T	Ring, 400/425 Stator & Center Support (Teflon) 1964-Up	6	8626356
34181ET	Ring, 4L80E Stator (Teflon) 1991-Up	2	8661789
34181EP	Ring, 4L80E Stator (Peek Material, Retro-Fit) 1998-Up	2	24205833
92181T	Ring, 4L80E Center Support (Teflon) 1991-Up	4	
34181FP	Ring, 4L80E Center Support (Peek Material, Retro-Fit) 1998-Up	4	24205722
92181TK	Ring Kit, 4L80E Center Support (4 Rings Per Kit)(Teflon) 1991-Up	1	8675729
34192	Ring, 400/425 Front Accumulator Piston (Outer)(Metal) 1964-Up	1	8623653
34192T	Ring, 400/425 Front Accumulator Piston (Outer)(Teflon) 1964-Up & 4L80E Front Servo Piston (Teflon) 1991-Up	1	
34195	Ring, 400 Front Servo Piston (Metal) 1964-Up	1	8626426

© Whatever It Takes Transmission Parts. Inc.

PART #	OIL SEALING RINGS (Continued)	QTY.	REFERENCE #
34195T	Ring, 400 Front Servo Piston (Teflon) 1964-Up	1	
34198A	Ring, 400 Rear Accumulator (Inner)(Metal) 1964-Up	1	
34198AT	Ring, 400/4L80E Rear Accumulator (Inner)(Teflon) 1964-Up	1	
34198E	Lathe Cut Seal, 400/4L80E Rear Accumulator (Inner)(Rubber) 1991-Up (Use 34353A)	1	
34353A	Lathe Cut Seal, 400/4L80E Rear Accumulator (Inner)(Rubber) 1991-Up	1	8661647
34199	Ring, 400 Rear Accumulator (Outer)(Metal) 1964-70	1	8623672
34199A	Ring, 400/4L80E Rear Accumulator (Outer)(Metal) 1971-Up	1	8627153
34199AT	Ring, 400/4L80E Rear Accumulator (Outer)(Teflon) 1971-Up	1	
34199E	Lathe Cut Seal, 400/4L80E Rear Accumulator (Outer)(Rubber) 1991-Up (Use 34354A)	1	
34354	Lathe Cut Seal, 400/4L80E Rear Accumulator (Outer)(Rubber) 1991-Up	1	

PART #	WASHERS & BEARINGS	QTY.	REFERENCE #
34200	Washer Kit, 400 1964-Up	1	
34200E	Washer Kit, 4L80E 1991-Up	1	
34201A	Bearing Kit, 400/4L80E (3 Bearing & Race Sets # 242K, 249AK, 256K) 1964-Up	1	8623300
34201E	Bearing Kit, 4L80E 1991-Up	1	
34211	Washer, 400 Stator .062” 1964-Up	1	
34211A	Washer, 400 Stator .073” 1964-Up	1	8623301
34211B	Washer, 400 Stator .084” 1964-Up	1	8623302
34211C	Washer, 400 Stator .095” 1964-Up	1	8623303
34211D	Washer, 400 Stator .106” 1964-Up	1	8623304
34211E	Washer, 400 Stator .117” 1964-Up	1	8623305
34211G	Washer, 400 Stator .128” 1964-Up	1	8623306
34211HA	Washer, 4L80E Stator .059” (Blue) 1991-Up	1	8677571
34211HB	Washer, 4L80E Stator .075” (Red) 1991-Up	1	8677572
34211HC	Washer, 4L80E Stator .091” (Brown) 1991-Up	1	8677573
34211HD	Washer, 4L80E Stator .107” (Green) 1991-Up	1	8677574
34211HE	Washer, 4L80E Stator .123” (Black) 1991-Up	1	8677575
34211HK	Washer Kit, 4L80E Stator (5 Selectives) 1991-Up	1	
34214	Bearing W/Race, 4L80E Overrun Drum to Overdrive Planet (Stays in Planet) 1991-Up	1	
34217	Bearing W/Race, 4L80E Overdrive Planet to Forward Drum 1991-Up (Use 54235A)	1	8628202
34226	Washer, 400/4L80E Center Support to Front Planet (Metal) 1964-Up	1	8624783
34226A	Washer, 400/4L80E Center Support to Front Planet (Plastic) 1964-Up	1	8623211
34232	Washer, 400/4L80E Forward Drum to Forward Hub 1964-Up	1	8624196
S34232BK	Washer Set, 400/4L80E Forward Drum To Forward Hub 1964-Up (.078” Thick)(Metal) (5 Per Set) (Sonnax)	1	
34235	Washer, 400/4L80E Forward Hub to Direct Drum (Metal) 1964-Up	1	8624781
34235A	Washer, 400/4L80E Forward Hub to Direct Drum (Plastic) 1964-Up	1	
54235A	Bearing W/Race, 4L80E Overdrive Planet to Forward Drum 1991-Up	1	8628202
S34235BK	Washer Set, 400/4L80E Forward Hub To Direct Drum (Metal) 1964-Up (.078” Thick) (5 Per Set) (Sonnax)	1	
S34235BAK	Washer Set, 400/4L80E Forward Hub To Direct Drum (Metal) 1964-Up (.094” Thick) (5 Per Set) (Sonnax)	1	
34238	Washer, 400/4L80E Front Planet to Rear Planet 4 Tab (Metal) 1964-Up (Use 34268)	1	8626372
34238A	Washer, 400/4L80E Front Planet to Rear Planet (.062”) 4 Tab (Plastic) 1964-Up	1	
34238B	Washer, 4L80E Front Planet To Rear Planet (.062”Thick)(2 Tab)(Plastic) 2005-Up	1	
54244A	Washer, 400/4L80E Front Planet to Rear Planet 4 Tab (Plastic) 1964-Up	1	
34242K	Bearing W/Race, 400/4L80E Center Support to Sun Gear 1964-Up	1	8623920
34243	Race, 400/4L80E Center Support to Sun Gear (Front) 1964-Up	1	
34244	Bearing, 400/4L80E Center Support to Sun Gear 1964-Up (Also Fits 400/4L80E Rear Ring Gear To Output Shaft)	1-2	
34245	Race, 400/4L80E Center Support to Sun Gear (Rear) 1964-Up (Also Fits 400/4L80E Rear Ring Gear To Output Shaft (Rear)	1-2	
34249AK	Bearing W/Races, 400/4L80E Sun Gear to Rear Ring Gear (With 3 Notches on ID) 1997-Up (Retro Fits 1964-Up)	1	
34249K	Bearing W/Races, 400/4L80E Sun Gear to Rear Ring Gear (With No Notches On ID) 1964-96	1	8623921
34249R	Shim, 4L80E Between # 252 & # 594 (.040”) 1999-Up	1	24211821
34250	Race, 400/4L80E Sun Gear to Rear Ring Gear (Front) 1964-Up	1	
34251	Bearing, 400/4L80E Sun Gear to Rear Ring Gear 1964-Up	1	
34252	Race, 400/4L80E Sun Gear to Rear Ring Gear (Rear) 1964-96	1	
34252A	Race, 400/4L80E Sun Gear to Rear Ring Gear (Rear) 1997-Up	1	24204962
S34252SK	Shim Kit, 400/4L80E (Under # 252 to Reduce End Play)(10 Per Kit) 1964-96 (Sonnax)	1	34500-Z
34253	Race, 400/4L80E Rear Ring Gear to Output Shaft (Front) 1964-Up	1	
34254	Bearing, 400/4L80E Rear Ring Gear to Output Shaft 1964-Up (Use 34244)	1	
34255	Race, 400/4L80E Rear Ring Gear to Output Shaft (Rear) 1964-Up (Use 34245)	1	
34256K	Bearing W/Race, 400/4L80E Rear Ring Gear to Output Shaft 1964-Up	1	8623922

© Whatever It Takes Transmission Parts. Inc.

34268	Washer, 400/4L80E Output Shaft to Case 4 Tab (Metal) 1964-Up (Also Fits 400/4L80E Front Planet To Rear Planet)	1-2	8626372
34269	Washer, 400/4L80E Output Shaft to Case 3 Tab .076” 1964-Up	1	8625401
34269A	Washer, 400/4L80E Output Shaft to Case 3 Tab .084” 1964-Up	1	8625402
34269B	Washer, 400/4L80E Output Shaft to Case 3 Tab .092” 1964-Up	1	8625403
34269C	Washer, 400/4L80E Output Shaft to Case 3 Tab .100” 1964-Up	1	8625404
34269D	Washer, 400/4L80E Output Shaft to Case 3 Tab .108” 1964-Up	1	8625405
34269E	Washer, 400/4L80E Output Shaft to Case 3 Tab .116” 1964-Up	1	8625406
34284	Washer, 400 Front Servo 1964-Up	1	8626884
34285	Washer, 4L80E Intermediate Sprag 1991-Up	2	8623211
34066H	Bearing, 4L80E Extension Housing (Heavy Duty Applications) 1991-Up	1	8670754

PART #	GASKETS & RUBBER COMPONENTS	QTY.	REFERENCE #
34300	Gasket, 400 Pan 1964-Up	1	8655625
34300E	Gasket, 4L80E Pan (Except Jaguar) 1991-Up	1	8677743
34300EJ	Gasket, 4L80E Pan (Jaguar) 1991-Up	1	
34300EW	Gasket, 4L80E Pan (Bonded Gasket)(Except Jaguar) 1991-Up	1	
34300G	Gasket, 425 Bottom Pan 1966-78	1	8626932
34301G	Gasket, 425 Sprocket Cover 1966-78	1	8625031
34305	Gasket, 400 Extension Housing 1964-Up	1	8624709
34305G	Gasket, 425 Final Drive to Case 1966-78	1	389948
34306	Gasket, 400 Governor Cover 1964-Up	1	8623263
34307	Gasket, 400 Rear Servo Cover 1964-Up (Metal) (Measures 4.655” Across Flat To Flat)	1	8623174
34307A	Gasket, 4L80E Rear Servo Cover 1991-Up (Metal) (Measures 4.570” Across Flat To Flat)	1	8675728
34308	Gasket, 4L80E Accumulator 1991-Up	1	8661829
44309	Gasket, 400 Pump Bolt Washer 1964-Up	6-8	8626281
34309	O-Ring, 400 Pump Bolt 1988-Up	AR	
34309A	O-Ring, 400 Pump Bolt 1964-65 & 1980-90	AR	
34309E	Seal, 4L80E Pump Bolt (Lathe Cut) 1990-Up	7	
34310	Gasket, 400 Pump 1964-Up	1	8623978
34310E	Gasket, 4L80E Pump Cover to Case 1991-Up	1	8677782
34310G	Gasket, 425 Pump 1966-78	1	
44311	O-Ring, 400 Pump 1964-Up	1	8626309
74311	O-Ring, 4L80E Pump Body 1991-Up	1	8654716
34311G	O-Ring, 425 Pump 1966-78	1	8625007
M302317A	Gasket, 400 Extension Housing (Adapter) To 205 Transfer Case 1969-86	1	
M304317B	Gasket, 400 Extension Housing (Adapter) To 208/241 Transfer Case (6 Bolt) 1987-Up	1	
M308317	Gasket, 400 Extension Housing (Adapter) To 231 Transfer Case (5 Bolt) 1988-Up	1	
34320	Gasket, 400 Case to Spacer Plate (6 Check Ball Type) 1965-90	1	8623563
34320A	Gasket, 400 Case to Spacer Plate (7 Check Ball Type) 1987-Up	1	8670458
34320E	Gasket, 4L80E Case to Spacer Plate (#205 On Cutout Or Ink # 8620205) 1991-96	1	8684205
34320EA	Gasket, 4L80E Case to Spacer Plate (#253 On Cutout Or Ink # 24204253) 1997-Up	1	24204253
34320G	Gasket, 425 Case to Spacer Plate 1966-78	1	8625203
34321	Gasket, 400 Valve Body to Spacer Plate (6 Check Ball Type) 1965-90	1	8623174
34321A	Gasket, 400 Valve Body to Spacer Plate (7 Check Ball Type) 1987-Up	1	8670447
34321E	Gasket, 4L80E Valve Body to Spacer Plate (#115 On Cutout Or Ink # 24201115) 1991-96	1	8684733
34321EA	Gasket, 4L80E Valve Body to Spacer Plate (#268 On Cutout Or Ink #24204268) 1997-Up	1	24204268
34328	Gasket, 400 Valve Body Detent Solenoid 1964-Up	1	8623741
34328G	Gasket, 425 Solenoid to Case 1966-78	1	8625086
34332	Lip Seal, 400/4L80E Intermediate Clutch (Inner) 1964-Up	1	8627627
34332K	Lip Seal Set, 400/4L80E Intermediate Clutch 1964-Up	1	
34333	Lip Seal, 400/4L80E Intermediate Clutch (Outer) 1964-Up	1	8623143
34334C	Lip Seal, 400/4L80E Forward & Direct Clutch (Center) 1964-Up	1	8623121
34334CA	Lip Seal, 400/4L80E Forward Clutch (Center, Bevel Cut) 1964-Up	1	8627690
34334D	Bonded Lip Seal & Sleeve, 4L80E Forward Clutch (Inner) 1997-Up (Orifice Is .070”) Retro Fits All Orifice Sizes	1	
34335	Lip Seal, 400/4L80E Forward & Direct Clutch (Outer) 1964-Up	1	8623101
34336	Lip Seal, 400/4L80E Forward & Direct Clutch (Inner) 1964-Up	1	8623102
34336AK	Lip Seal Set, 400/4L80E Forward & Direct Clutch 1964-Up	1	
34340	Lip Seal, 4L80E 4th Clutch (Inner) 1991-Up	1	
34340K	Lip Seal Set, 4L80E 4th Clutch 1991-Up	1	
34341	Lip Seal, 4L80E 4th Clutch (Outer) 1991-Up	1	
34345G	O-Ring, 425 Governor Cover 1966-78	1	
34346	O-Ring, 400 Modulator 1964-Up (Use 103368)	1	10054241
34347	O-Ring, 400 Case Connector (Small) 1994	1	
34347A	O-Ring, 400 Case Connector 1995-Up (Use 103368)	1	
34347E	O-Ring, 4L80E Wire Harness 1991-Up	1	
34348	O-Ring, 4L80E Extension Housing 1991-Up	1	8681168
34349	O-Ring, 400 Linkage Shaft 1964	1	

© Whatever It Takes Transmission Parts. Inc.

PART #	GASKETS & RUBBER COMPONENTS (Continued)	QTY.	REFERENCE #
34351	D-Ring, 4L80E/4L85E 3rd & 4th Clutch Accumulator Piston (Large)(Viton) 1990-Up	2	8661647
34352	D-Ring, 4L80E/4L85E 3rd Clutch Accumulator Piston (Small)(Viton) 1990-Up	1	8661639
34353A	O-Ring, 400/4L80E Rear Accumulator (Inner) 1991-Up	1	8678294
34354	O-Ring, 400/4L80E Rear Accumulator (Outer) 1991-Up	1	
34363	Seal, 400/4L80E Rear Servo Piston 1964-Up	1	8623430
103368	O-Ring, 400 Modulator & Case Connector 1964-Up	2	10054241
12368A	O-Ring, 400 Filter Pick-Up Tube 1964-Up	1	1363951
34369A	O-Ring, 400 Speed-O Housing 1964-Up	1	1359319
34370	O-Ring, 4L80E Output Speed Sensor 1991-Up	1	
44371A	O-Ring, 400 Filler Tube 1964-79	1	6264902
44371B	Boot, 400/4L80E Filler Tube 1980-Up	1	1259475
34374	O-Ring, 400 Output Shaft to Yoke (1.450”OD) 1964-Up	1	8616504
34374AA	O-Ring, 4L80E Yoke Tube To Yoke (2.150”OD) 1991-Up (The Yoke Tube Is Tin & Is #958 In The 350 Picture)	1	
34376	O-Ring, 4L80E PWM Solenoid 1991-Up	1	
84379	Boot, 4L80E Filter Neck 1991-Up	1	8656613
34379A	Boot, 400 Filter Neck (Flat Filter Type) L1967-Up	1	
34380	O-Ring, 4L80E Input Shaft 1991-Up	1	8661760
34386	Lathe Cut Seal, 4L80E Orifice Cup Plug (in Valve Body) 1991-Up	1	
34387	O-Ring, 400 Parking Pawl Pin 1964-Up	1	8623040
34390	External Seal Kit, 400 W/Pan Gasket 1964-Up	1	
34390E	External Seal Kit, 4L80E W/Pan Gasket 1991-Up	1	

PART #	TECHNICAL MANUALS	QTY.	REFERENCE #
34400	Tech Manual, 400 1964-Up (ATSG)	1	83-400TM
34400E	Tech Manual, 4L80E 1991-Up (ATSG)	1	83-4L80E
A34400E	Rebuild Manual, 4L80E Rebuild Procedures (ATRA)	1	
34407A	Tech Video, 4L80E (Includes Manual) 1991-Up	1	83-SGTV-22

PART #	ELECTRICAL COMPONENTS	QTY.	REFERENCE #
74410A	Switch, 4L80E MPLS/PRNDL (4 & 7 Pin Connectors) (Black Plastic) 1995-03	1	12450016
74410B	Switch, 4L80E MPLS/PRNDL (11 Pin Single Connector) 2004-08	1	24221125
34414	Switch, 400 Spark Control 1964-Up	1	8627332
34418	Solenoid, 4L80E TCC, PWM 1991-Up	1	24210864
34420	Solenoid, 400 Valve Body Detent 1964-Up	1	8629935
34420G	Solenoid, 425 Valve Body Detent 1966-Up	1	
34420K	Solenoid Kit, 4L80E (1 TCC(or PWM), 2 Shift, 1 Force Motor, 1 Manifold Pressure Switch, & The Internal Wire Harness) 1991-Up (Rostra)	1	52-9018
T34420K	Solenoid Master Kit, 4L80E (1 TCC (or PWM), 2 Shift & 1 Pressure Regulator) 1991-93	1	MS-4L80E
T34420AK	Solenoid Master Kit, 4L80E (1 TCC (or PWM), 2 Shift & 1 Pressure Regulator) 1994-Up	1	MS-4L80E-H
34421	Solenoid, 4L80E 1-2 Shift (Also Fits 2-3 Shift)	1	8678638
34422	Solenoid, 4L80E 2-3 Shift	1	8678639
34429	Throttle Position Sensor, 4L80E (TPS)(Diesel) 1991-Up	1	10137417
34431E	Vacuum Pressure Control System, 4L80E (Transgo)	1	48-MOD
34434	Solenoid, 400 Kickdown 1964-Up	1	1242101
34435	Solenoid, 4L80E Pressure Control (Force Motor) 1991-93	1	8677314
34435A	Solenoid, 4L80E Pressure Control (Force Motor) 1994-03 (Has 2 Flat Blades On End) (1.300”OD)	1	24220158
24435EA	Solenoid, 4L80E Pressure Control (Force Motor) 1991-92 (Has 2 Flat Blades On The End) (1.396”OD)	1	
34435AK	Repair Kit, 4L80E (Force Motor Solenoid) 1992-02 (With Tool Kit) Fixes 4 Solenoids	1	
34435AK-1	Repair Kit Refills, 4L80E (Force Motor Solenoid) 1992-02 (Without Tool Kit) Fixes 4 Solenoids	1	
34435B	Solenoid, 4L80E Pressure Control (Force Motor)(Has 2 Pin Connector On The Side Of Solenoid) 2004-Up	1	24224905
34436	Speed Sensor, 4L80E Input & Output 1991-Up	1-2	24203876
34437	Sensor, 4L80E Temperature 1991-Up	1	8661818
34442	Switch, 4L80E Manifold Pressure Switch 1991-Up	1	8681413
34444	Connector, 400 Case 1 Prong 1964-65	1	2977975
34444A	Connector, 400 Case 1 Prong 1968-Up	1	24205373
34444B	Connector, 400 Case 2 Prong (W/Variable Pitch) 1964-67	1	2984091
34444C	Connector, 400 Case 2 Prong 1970-82	1	8629502
34445K	Repair Kit, 4L80E External Wire Harness (11 Wire)(Plugs Into Connector) 1994-Up	1	350-0033
74445CK	Repair Kit, 4L80E External Wire Harness (7 & 4 Pin Neutral Safety Connector With Wires & Shrink Tubes) 1995-03	1	15305887
74445E-2K	Repair Kit, 400/4L80E (Repairs The 2 Pin VSS Harness Only) (1”OD)	1	
84445GH	Wire Harness Repair, 4L80E External (20 Pin Connector)(GM Universal)(Rostra)	1	
34446	Wire Harness, 4L80E Internal 1991-5/93	1	12143072

© Whatever It Takes Transmission Parts. Inc.

34446AK	Wire Harness, 4L80E Internal (11 Prong)(W/Case Connector) 1991-03 (For 1991-93 You Must Sell 34445K Also)	1	350-0032
34446BK	Wire Harness Kit, 4L80E Internal/External W/Connectors (Retro Fit) 1991-03 With Temperature Switch	1	24200161
34446C	Wire Harness, 4L80E Internal (11 Prong, 4 Switch Type) 1997-03	1	12181863
34446D	Wire Harness, 4L80E Internal (With Temperature Sensor) 2004-Up	1	
34446J	Wire Harness, 4L80E Internal (Jaguar) 1991-Up	1	
T34446UC	Repair Clip, 4L80E (Repair Broken Solenoid Clips)(Teckpak)(Per 5 Pieces)	1	
350-0063	GM Computer Repair (ECM) 4L80E, (Wire Harness With Terminal Ends)	1	
34447	Recalibrator, 4L80E Electronic Speed-O-Meter	1	RECAL-GM
34447D	Interceptor, 4L80E (Electronic Modulator) 1991-93	1	
34447E	Interceptor, 4L80E (Electronic Modulator) 1994-Up	1	
34449	E-Place, 4L80E Electronic Controller Kit 1994-Up	1	EP34-B

PART #	MISC. COMPONENTS	QTY.	REFERENCE #
34476	Silencer Ring, 400/4L80E (Black Plastic) 1965-Up	1	8626112
74483B	Cup Plug, 400/4L80E Parking Pawl Shaft	1	8620318
34484A	Lube Orifice Seal, 4L80E (2WD) Extension Housing Rear Lube 1991-Up	1	9427692
34484EB	Orifice, 4L80E Forward Clutch Sleeve .086” 1991-Up	1	
34487	E-Clip, 400 Accumulator Piston Retainer (10 Per Bag)	1	
44487	E-Clip, GM (3/16”) 1964-Up	2	9431762
T44489	Dust Cover, GM Universal (Teckpak) 1964-Up	1	K35803U
34490	Vent, 400/4L80E Case 1964-Up	1	8633408
34494A	Filler Tube & Dip Stick, 400 Deep Pan	1	
T44494U	Filler Tube & Dip Stick, GM Fitz All (Teckpak) 1964-Up	1	K35999U
T44494UL	Filler Tube & Dip Stick, 400 (Fitz All) With Lockdown Stick 1969-86 (Teckpak)	1	
34495	Filler Pipe Intake, 400 Deep Pan (Plastic)(5 3/4”Long) L1967-Up	1	8629526
34495A	Filler Pipe Intake, 400 Shallow Pan (Plastic)(4 1/2”Long) L1967-Up	1	8626886

PART #	HARD PARTS	QTY.	REFERENCE #
34500	Pump, 400 (6 Bolt)(Body Cast # 895, Stator Cast # 896) 1971-Up	1	
34500A	Pump, 400 (8 Bolt)(Body Cast #121)(Stator Cast #174 or 176) OR (Body Cast #895 & Stator Cast # 896 or 7000) 1964-Up (Less Valves)	1	
34500AA	Pump, 400 (Variable Pitch) 1964-67	1	
34500B	Pump, 400 (8 Bolt)(Body Cast # 121, Stator Cast # 896) 1964-Up	1	
34500E	Pump, 4L80E (Body Cast # 778, 779, or 702)(Stator Cast # 184 or #263 With .500”OD TCC Limit Valve) 1991-96 (Less Valves)	1	
34500E-1	Pump, 4L80E (Body Cast # 778)(Stator Cast # 779) 1991-96 (Less Valves)	1	
34500EA	Pump, 4L80E (Body Cast # 778)(Stator Cast # 263 With .460”OD TCC Limit Valves) 1991-96 (Less Valves)	1	
34500EC	Pump, 4L80E (Body Cast # 302 or # 779)(Stator Cast # 512 or # 379) 1997-03 (Less Valves)	1	
34500ED	Pump, 4L80E (Body Cast # 302 Or 779) (Stator Cast # 512 Or 379) 2004-Up (Less Valves) Will Not Retro-Fit	1	

PART #	PUMP COMPONENTS	QTY.	REFERENCE #
34507B-6	Plug, 4L80E (Plugs Off The Return Cooler Line Circuit In The Stator On Units Where The Return Cooler Line Was Moved To The Rear Of The Case) 2000-Up (With Pump Gasket & O-Ring)	1	
S34507C-6K	End Plug Set, 4L80E TCC Bore (5 Per Set) 1991-Up (Sonnax)	1	34994-11
34507CCK	Converter Conversion Kit, 4L80E/4L85E Corrects Lube Flow When Using Non Lockup Converter (Transgo)	1	
34507E-4	Retainer, 4L80E (Metal)(Oil Deflector)(1 Pump Body Bolt Holds This on) 1997-Up	1	24200357
A34507EA-6K	Conversion Kit, 4L80E Pump (Converts 1997-03 Pump To 2004-Up Pump)(Fixes 3 Pumps) (Superior)	1	
S34507EL-4K	Retaining Pin Set, 4L80E Overdrive/Reverse Check Ball (10 Per Set) (Sonnax)	1	34994-12
34507EP-1	Valve, 4L80E Pressure Regulator (Sonnax)	1	
34507EP-3	Spring, 4L80E Pressure Regulator Valve 1991-Up	1	8623090
S34507EP-6K	Balance Plug Set, 4L80E Pressure Regulator End Plug (Without Rings) (5 Per Set) (Sonnax)	1	34200-05K
34507EPK	Pressure Regulator Assembly, 4L80E 1991-Up	1	8682998
34507ER-1	Valve, 4L80E Reverse Boost (.855”OD On Large Land) 1991-96	1	8680549
34507ER-2	Sleeve, 4L80E Reverse Boost Valve (.855”ID) 1991-96	1	8676456
S34507ER-2A	Sleeve, 4L80E Reverse Boost Valve (.830”ID) 1997-Up (Sonnax)	1	34200-2A
S34507ERK	Boost Valve & Sleeve, 4L80E Reverse 1991-96 (Sonnax)	1	34200-03K
S34507FRK	Reverse Boost Valve & Sleeve, 4L80E (With O-Rings) (Sleeve Uses 2 O-Rings) 1989-Up (Sonnax)	1	34200-01K
S34507HRK	Reverse Boost Valve & Sleeve, 4L80E (With O-Rings) (Self Regulating Boost Valve Kit With Relief Valve) (Sonnax)	1	34200-10K

© Whatever It Takes Transmission Parts. Inc.

PART #	PUMP COMPONENTS (Continued)	QTY.	REFERENCE #
S34507HRK-1	Line Pressure Booster Kit, 4L80E (Oversized)(Contains: Reverse Boost Valve, Sleeve With Relief Valve, Pressure Regulator Valve, Spring, & End Plug)(Sonnax)(Must Use T-F-34200-TL36)	1	
T-F-34200-TL36	Tool For S34507HRK-1	1	
S34507P-RK	Ring Set, 400 Pressure Regulator Valve (Teflon) (25 Per Pack) (Fits S34507PK) (Sonnax)	1	34910-S-25
S34507PK	Pressure Regulator Assembly, 400 1964-Up (Sonnax)	1	34910-03K
S34507RK	Boost Valve & Sleeve, 400 Reverse 1964-Up (Sonnax)	1	34910-01K
S34529	Stator Shaft Tube, 400 (Hi-Performance) (Sonnax)	1	
34529E	Tube, 4L80E Stator Support 1991-Up	1	

PART #	HARD PARTS (Continued)	QTY.	REFERENCE #
34510	Pump Body, 400 (6 Bolt)(Cast # 895) 1971-Up	1	8679988
34510A	Pump Body, 400 (8 Bolt)(Cast # 895) 1964-Up	1	
34510AA	Pump Body, 400 (Variable Pitch) 1964-67	1	
34510B	Pump Body, 400 (8 Bolt)(Cast # 121) 1964-Up	1	
54510C	Pump Body, 425 1979-81	1	
34510E	Pump Body, 4L80E (Cast # 702, 778, or 779) 1991-96 (Can Use 34510EA)	1	24211287
34510EA	Pump Body, 4L80E (Cast # 302, or 779) 1997-Up	1	
34520	Stator, 400 (Cast # 896) 1964-Up	1	
34520AA	Stator, 400 (Variable Pitch) 1964-67	1	
34520E	Stator, 4L80E (Cast # 779) (Less Valves) 1991-96	1	8681180
34520EA	Stator, 4L80E (Cast # 263 With .460"OD TCC Limit Valve) 1991-96 (Less Valves)	1	
34520EB	Stator, 4L80E (Cast # 184 or #263 With .500"OD TCC Limit Valve) 1991-96 (Less Valves)	1	
34520EC	Stator, 4L80E (Cast # 512 Or 379) (Less Valves) 1997-03	1	24204303
34520ED	Stator, 4L80E (Cast # 512 Or 379) (Less Valves) 2004-Up	1	
34530A	Pump Gear Set, 4L80E 1991-Up	1	
44530AC	Pump Gear Set, 400 (.727" Thick) 1964-Up	1	
34530AX	Pump Gear Set, 4L80E (Oversize)	1	
34545	Housing, 4L80E 4th Clutch (Cast # 8661266)(For 8 Lug Pressure Plate) 1991-96	1	24200789
34545B	Housing, 4L80E 4th Clutch (Cast # 24205817)(For 2 Lug Pressure Plate) 1997-Up	1	24215124
34547	Apply Ring, 400/4L80E Forward Clutch 1964-Up	1	
34548	Apply Ring, 400/4L80E Forward Clutch (.730") 1964-Up	1	
34548A	Apply Ring, 400/4L80E Forward Clutch (.780") 1964-Up	1	
34551	Drum, 4L80E Overrun Clutch W/Sun Gear (Uses A 12 Roller Sprag With .309"OD Rollers) 1991-01	1	8680918
34551A	Drum, 4L80E Overrun Clutch W/Sun Gear (Uses A 12 Roller Sprag With .196"OD Rollers) 2001-Up	1	
34554	Drum, 400 Forward Clutch 1964-Up	1	8624908
34554E	Drum, 4L80E Forward Clutch W/Ring Gear (Lip Seal Piston Type) 1991-96	1	8680917
34554EA	Drum, 4L80E Forward Clutch W/Ring Gear (Molded Piston Type) 1997-Up	1	24208850
34555K	Drum, 400 Direct Clutch W/Lug Type Sprag (5 Clutch)	1	
34555AK	Drum, 400 Direct Clutch W/Roller Type Sprag (5 Clutch)(W/Check Ball)	1	
34555ABK	Drum, 400 Direct Clutch W/Roller Type Sprag (5 Clutch)(No Check Ball)	1	
34555BK	Drum, 400 Direct Clutch W/Lug Type Sprag (6 Clutch)(W/Check Ball)	1	
34555BAK	Drum, 400 Direct Clutch W/Lug Type Sprag (6 Clutch)(No Check Ball)	1	
34555CK	Drum, 400 Direct Clutch W/Roller Type Sprag (6 Clutch)(W/Check Ball)	1	
34555CAK	Drum, 400 Direct Clutch W/Roller Type Sprag (6 Clutch)(No Check Ball)	1	
34555E	Drum, 4L80E Direct Clutch W/Out Sprag 1991-Up	1	24209311
34555EK	Drum, 4L80E Direct Clutch W/Sprag 1991-Up	1	
34560	Piston Kit, 4L80E Overrun Clutch (.079" Snap Ring) 1991-01	1	
34560A	Piston Kit, 4L80E Overrun Clutch (.060" Snap Ring) 2001-Up	1	
34561	Piston Kit, 4L80E 4th Clutch 1991-Up	1	
34562	Piston Kit, 400 Intermediate Clutch (Aluminum)	1	8670196
34562A	Piston Kit, 400 Intermediate Clutch (Steel)	1	
34562E	Piston Kit, 4L80E Intermediate Clutch (Piston Cast # 8661657)	1	
34562EA	Piston Kit, 4L80E Intermediate Clutch (Piston Cast # 24202553)	1	
34564	Piston Kit, 400 Forward Clutch 1964-Up	1	
34564E	Piston Kit, 4L80E Forward Clutch (Aluminum Piston Cast # 8675507)	1	
34564EA	Piston Kit, 4L80E Forward Clutch (Steel Piston W/Molded Rubber)	1	
34565	Piston Kit, 400 Direct Clutch (5 Clutch)(Aluminum W/Check Ball)	1	
34565A	Piston Kit, 400 Direct Clutch (5 Clutch)(Steel)	1	
34565B	Piston Kit, 400 Direct Clutch (5 Clutch)(Aluminum No Check Ball)	1	
34565C	Piston Kit, 400 Direct Clutch (6 Clutch)(Aluminum W/Check Ball)	1	
34565D	Piston Kit, 400 Direct Clutch (6 Clutch)(Steel)	1	
34565DA	Piston Kit, 400/4L80E Direct Clutch (6 Clu)(Alum No Check Ball)	1	
34565E	Piston Kit, 400/4L80E Direct Clutch (5 Clu)(Alum No Check Ball)(Piston Cast # 8675510)	1	
34565EA	Piston Kit, 4L80E Direct Clutch (5 Clu)(Molded Rubber)	1	

© Whatever It Takes Transmission Parts. Inc.

34574	Clutch Hub, 400/4L80E Forward Clutch 1968-96	1	8661611
34574E	Clutch Hub, 400/4L80E Forward Clutch 1966-Up	1	
34574EAHP	Hub, 400/4L80E Forward Cluych (Billet Steel)(With Two Torrington Bearings That Replace Washers)	1	
34575	Clutch Hub, 400/4L80E Direct Clutch (1.230” Thick Splines)	1	
34575E	Clutch Hub, 4L80E Direct Clutch 1.130” Thick Splines	1	
34575EA	Clutch Hub, 4L80E Direct Clutch 1.160” Thick Splines	1	
34580	Planet, 4L80E Overdrive (Uses A Sprag With .309”OD Rollers) 1991-01	1	8680918
34580K	Planet Kit, 4L80E Overdrive (Uses A Sprag With .309”OD Rollers) 1991-01 (Contains; # 551,580,560,650)	1	24200130
34580A	Planet, 4L80E Overdrive (Uses A Sprag With .196”OD Rollers) 2001-Up	1	
34580AK	Planet Kit, 4L80E Overdrive (With Sprag With .196”OD Rollers) 2001-Up (Contains; # 551, 580A, & 650A) (Retro-Fits 1991-Up)	1	
34582	Planet, 400 Front (Angled Teeth)(Lug Type Sprag) 1964-66	1	8624971
34582A	Planet, 400/4L80E Front (4 Gear Angled Teeth)(Uses Roller Type Sprag With No Legs And A Spacer Or Fits Sprag With 8 Legs) 1967-Up (With Smooth Band Surface, Used With Smooth Band)	1	8627893
34582A-1	Planet, 400/4L80E Front (4 Gear Angled Teeth)(Uses Roller Type Sprag With No Legs And A Spacer Or Fits Sprag With 8 Legs) 1967-Up (With Grooved Band Surface Used With Grooved Band)	1	
34582AA	Planet, 4L80E Front (4 Gear Angled Teeth) (Uses Roller Type Sprag With No Legs Or Spacer, Has A Bevel Under Sprag) 1996-Up	1	
34582AB	Planet, 4L80E Front (5 Gear Angled Teeth) (Uses Roller Type Sprag With 8 Legs) 1996-Up	1	
34582G	Planet, 425 Front (Roller Type Sprag) 1966-78	1	
34582S	Planet, 400/4L80E Front (Straight Teeth)	1	24205552
34583S	Planet Kit, 400/4L80E (Straight Teeth) (Contains: # 582, 584, 612, & 594) 1964-96	1	
34583SE	Planet Kit, 400/4L80E (Straight Teeth) (Contains: # 582, 584, 612, & 594) 1997-Up	1	
34584	Planet, 400 Rear (Angled Teeth)(Short Parking Lugs) (.180” From Top Of Snap Ring Groove To Top Of Planet) 1969-Up	1	8655132
34584-1	Planet, 400 Rear (Angled Teeth)(Short Parking Lugs)(.130” From Top Of Snap Ring Groove To Top Of Planet) 1964-68	1	
34584A	Planet, 400 Rear (Angled Teeth)(Long Parking Lugs)	1	
34584A-7K	Planet Rebuild Kit, 400/4L80E Front & Rear 1964-Up (With .750”Wide Pinion Gears) (Contains 4 Pinion Pins, 72 Needle Rollers, 8 Round Washers & 8 Thrust Washers)	1	
34584E	Planet, 4L80E Rear (4 Gear Angled Teeth)(Less Electric Pick-Up) 1991-98 (.710” Tall Pinion Gears) (Can Use 34584EA)	1	8675611
34584EA	Planet, 4L80E Rear (4 Gear Angled Teeth)(Less Electric Pick-Up) 1999-05 (.795” Tall Pinion Gears) (Can Use 34584E)	1	
34584EB	Planet, 4L80E Rear(4 Gear, Angled Teeth)(Less Electric Pick-Up) 2005-Up (Pinion Gears Are .795”Tall)(Uses A 2 Tab #238 Washer)	1	
34584EC	Planet, 4L80E Rear(4 Gear, Angled Teeth)(W/Electric Pick-Up) 2005-Up (Pinion Gears Are .795”Tall)(Uses A 2 Tab #238 Washer)	1	
34584F	Planet,4L80 Rear (5 Gear Angled Teeth) (With Electric Pick-Up) 1999-04 (.795” Tall Pinion Gears)(Uses A 4 Tab #238 Washer)	1	
34584FA	Planet, 4L80E Rear(5 Gear, Angled Teeth)(W/Electric Pick-Up) 1999-04 (Pinion Gears Are .795”Tall)(Uses A 2 Tab #238 Washer)	1	
34584S	Planet, 400 Rear (Straight Teeth)(Short Parking Lugs)	1	8655133
34584SA	Planet, 400 Rear (Straight Teeth)(Long Parking Lugs)	1	
34584SE	Planet, 4L80E Rear (Straight Teeth)(With Electric Pick-Up) 1991-Up	1	8675612
34594	Ring Gear, 400/4L80E Rear Planet (Angled Teeth) 1964-96	1	8661892
34594B	Ring Gear, 4L80E Rear Planet (Angled Teeth) (With 4 Deep Inner Splines) 1997-Up	1	
34594S	Ring Gear, 400/4L80E Rear Planet (Straight Teeth)	1	8675532
34594SB	Ring Gear, 4L80E Rear Planet (Straight Teeth) (With 4 Deep Inner Splines) 1997-Up	1	
34612	Sun Gear, 400 Angled Teeth (26 Narrow & 2 Wide Splines) 1964-65	1	
34612A	Sun Gear, 400/4L80E Angled Teeth (28 Inner Splines) 1966-96	1	
34612B	Sun Gear, 4L80E Angled Teeth (28 Inner Splines) 1997-Up	1	
34612G	Sun Gear, 425 1966-78	1	
34612S	Sun Gear, 400/4L80E Straight Teeth Up to 1997	1	8627130
34612SA	Sun Gear, 400/4L80E Straight Teeth 1997-Up	1	
34630	Center Support, 400 (Lug Type Sprag)	1	8680914
34630A	Center Support, 400 (Roller Type Sprag)	1	8625990
34630E	Center Support, 4L80E (Uses A 15/16” Long # 783 Bolt) 1991-96	1	8661865
34630EA	Center Support, 4L80E (Uses A 1 3/8” Long # 783 Bolt) 1991-96	1	
34630EB	Center Support, 4L80E (W/Lube Hole Passage) (Does Not Use A Shim # 34249R) (4.220” Tall, Measured From The Left Edge Of Ring Tower Thru Center To Where # 243 Sits) 1997-99	1	24208849
34630EC	Center Support, 4L80E (W/Lube Hole Passage) (Uses A Shim # 34249R) (4.180” Tall, Measured From The Front Edge Of Ring Tower Thru Center To Where # 243 Sits) 1999-Up	1	
34630ECK	Center Support Kit, 4L80E (With # 630EC, 674BA, & 249R) 1997-Up (Will Retro For 34630EB (1997-99) & 34630EC (1999-Up)	1	

© Whatever It Takes Transmission Parts. Inc.

PART #	SPRAGS & ONE WAY CLUTCHES	QTY.	REFERENCE #
34650	Sprag, 4L80E Overdrive (.309"OD Rollers) 1991-01	1	930678
34650A	Sprag, 4L80E Overdrive (.196"OD Rollers) 2001-Up	1	

PART #	HARD PARTS (Continued)	QTY.	REFERENCE #
34652	Sprag, 400 Intermediate (Roller Type)	1	8625814
34652A	Sprag, 400/4L80E Intermediate (Lug Type)(Heavy Duty)(34 Elements)	1	8663173
34652B	Sprag, 400/4L80E Intermediate (Lug Type)(16 Elements)	1	8623116
34654	Sprag, 400 Low Clutch Roller (Rear)	1	8623842
34654E	Sprag, 4L80E Low Clutch Roller (Rear) (No Legs) 1991-95 (Can Use 34654)	1	7471002
34654EA	Sprag, 4L80E Low Clutch Roller (Rear) (With 8 Legs) 1996-Up	1	7471009
34662C	Inner Race, 400/4L80E Intermediate Sprag (Lug Type)	1	
34663	Outer Race, 400 Intermediate Sprag (.751" Thick)	1	8629487
34663E	Outer Race, 4L80E Intermediate Sprag (.795" Thick) 1991-Up	1	8680915
34663EK	Outer Race Kit, 4L80E Intermediate (Contains: #663, 652B, 694, 886)	1	8680915
34670	Input Shaft, 400 1964-Up	1	8624772
34670E	Input Shaft, 4L80E (.100" Wide Snap Ring Groove)(Unhardened)	1	24200128
34670EA	Input Shaft, 4L80E (.050" Wide Snap Ring Groove)(Hardened)	1	
34670EAHP	Shaft, 4L80 Input (300mm Steel High Performance) 1991-13 (Transmission Specialties)	1	
34672	Main Shaft, 400 (10 1/4" Long) 1964-Up	1	
34672A	Main Shaft, 4L80E (10 3/16" Long, W/Lube Hole) 1991-96	1	8661613
34672B	Main Shaft, 4L80E (10 3/16" Long, No Lube Hole) 1997-98 (1.093" From End of Shaft to Forward Clutch HUb Stop)	1	
34672BA	Main Shaft, 4L80E (10 3/16" Long, No Lube Hole) 1999-Up (1.083" From End of Shaft to Forward Clutch Hub Stop)	1	
34674	Shaft, 400 Intermediate Sun Gear (26 Splines on Sun Gear) 1964-65	1	
34674A	Shaft, 400/4L80E Intermediate Sun Gear (32 Splines on Sun Gear) 1966-96	1	8661708
34674B	Shaft, 4L80E Intermediate Sun Gear (32 Splines on Sun Gear) 1997-98	1	
34674BA	Shaft, 4L80E Intermediate Sun Gear (4.370" Long Bushing Surface) 1999-Up	1	
34678	Output Shaft, 400 (Cadillac, Long) 1964-Up	1	
34678A	Output Shaft, 375 (15" Long)(Uses a Speed-O Gear) 1964-Up	1	
34678AA	Output Shaft, 375 (15" Long)(Uses a Electric Pick-Up)	1	
34678B	Output Shaft, 400 (15" Long) 1964-Up	1	
34678C	Output Shaft, 400 (11 3/4" Long)(W/350 Splines)	1	
34678D	Output Shaft, 400 2wd & Some 4x4 (9" Long, W/Rubber O-Ring Groove)	1	
34678DA	Output Shaft, 400 2WD (9" Long Without Rubber O-Ring Groove)(Uses Steel Speed-O Gear)	1	
34678E	Output Shaft, 400 2WD (9" Long Without Rubber O-Ring Groove)(Uses Plastic O-Ring Groove)	1	8627453
34678EA	Output Shaft, 400 Truck (9" Long, Bolt-On Type Yoke)(Uses Plastic Speed-O Gear)	1	8627456
34678EB	Output Shaft, 400 Truck (9" Long, Bolt-On Type Yoke)(Uses Steel Speed-O Gear)	1	
34678EC	Output Shaft, 400 Truck (9" Long, Bolt-On Type Yoke)(W/Electronic Pick-up)	1	
34678F	Output Shaft, 400 4x4 (Jeep)(Coarse Splines)	1	
34678H	Output Shaft, 400 4x4 (7" Long)	1	8629461
34678HA	Output Shaft, 400 4x4 (6" Long)	1	8679991
34678J	Output Shaft, 400 4x4 (6" Long)(W/350 Splines)	1	
34678K	Output Shaft, 400 4x4 (6 7/8" Long)(W/700R4 Splines)	1	
34678M	Output Shaft, 4L80E (9" Long, Bolt-On Type Yoke)(W/Lube Hole) 1991-96	1	
34678MA	Output Shaft, 4L80E (9" Long, Bolt-On Type Yoke)(No Lube Hole) 1997-Up (Uses A Brake Drum)	1	
34678N	Output Shaft, 4L80E 4x4 (3 3/4" Long)(W/Lube Hole) 1991-96	1	
34678NA	Output Shaft, 4L80E 4x4 (3 3/4" Long)(W/Out Lube Hole) 1997-Up	1	
34678P	Output Shaft, 4L80E 4x4 (5" Long)(W/Lube Hole) 1991-96	1	
34678PA	Output Shaft, 4L80E 4x4 (5" Long)(No Lube Hole) 1999-up	1	
34678Q	Output Shaft, 4L80E (8 1/8" Long, W/O-Ring, Slip-On Yoke)(W/Lube Hole) 1991-96	1	
34678QA	Output Shaft, 4L80E (8 1/8" Long, W/O-Ring, Bolt-On Yoke)(W/Lube Hole) 1991-96	1	
34678QAA	Output Shaft, 4L80E (8 1/8" Long, W/O-Ring, Slip-On Yoke)(No Lube Hole) 1997-Up	1	
34678QB	Output Shaft, 4L80E (8 1/8" Long, W/O-Ring, Bolt-On Yoke)(No Lube Hole) 1997-Up	1	
34678R	Output Shaft, 4L80E (8" Long, No O-Ring Groove)(W/Lube Hole) 1991-96	1	
34678RA	Output Shaft, 4L80E (8" Long, No O-Ring Groove)(No Lube Hole)(Slip On Yoke) 1997-Up	1	
34678RAA	Output Shaft, 4L80E (8"Long, No O-Ring Groove)(No Lube Hole)(Bolt On Yoke) 1997-Up	1	
34678S	Output Shaft, 4L80E (7 7/8" Long, W/O-Ring, Bolt-On Yoke)(W/Lube Hole) 1991-96	1	
34678SA	Output Shaft, 4L80E (7 7/8" Long, W/O-Ring, Bolt-On Yoke)(No Lube Hole) 1997-Up	1	
34678T	Output Shaft, 4L80E Jaguar (7 3/8" Long, W/O-Ring Groove)(W/Lube Hole) 1991-96	1	
34680	Governor, 400 1964-Up	1	8623852
34680G	Governor, 425 1966-78	1	8626853
34684	Gear, 400 Governor Driven 1966-Up (Right Angle)(Hollow End For Guide Pin In Case) (1964-65 Had No Pin & Used A Button On End Of Gear)	1	8623924
34684B	Gear, 425 Governor Driven (Left Angle) (With 1 Pin & 2 Nails) 1966-78	1	
34686	Cover, 400 Governor 1964-Up	1	

© Whatever It Takes Transmission Parts. Inc.

34694	Retainer, 400/4L80E Intermediate Sprag 1964-Up	1	8626334
34700G	Chain, 425 Drive 1966-78	1	
34740	Valve Body, 400 (Used W/6 Check Ball Case) 1967-Up (Without Accumulator Assembly)	1	
34740A	Valve Body, 400 (Used W/7 Check Ball Case) 1987-Up (Without Accumulator Assembly)	1	
34740D	Valve Body, 4L80E (4 Solenoids) (Cast # 8676811) (Without Plate Or Accumulator Assembly) (Has No Temperature Switch)	1	
34740E	Valve Body, 4L80E (4 Solenoids) (Cast # 8676811) (Without Plate Or Accumulator Assembly) (With Temperature Switch)	1	
34740EA	Valve Body, 4L80E (4 Solenoids) (Cast # 8683479) (Without Plate Or Accumulator Assembly)	1	
34740EB	Valve Body, 4L80E (4 Solenoids) (Cast # 8684212) (Without Plate Or Accumulator Assembly) 1995-96	1	
34740EC	Valve Body, 4L80E (4 Solenoids) (Cast # 24204267) (With Plate And Accumulator Assembly) (Uses A 34435A Pressure Control Solenoid With 2 Flat Blades On The End) 1997-04	1	
34740ED	Valve Body, 4L80E (4 Solenoids) (Cast # 24204267) (With Plate And Accumulator Assembly) (Uses A 34435B Pressure Control Solenoid With 2 Pin Connector On The Side) 2004-Up	1	

PART #	VALVE BODY COMPONENTS	QTY.	REFERENCE #
S34741-2K	Sleeve Kit, 4L80E/4L85E 3rd & Reverse Checkball Sleeve (Includes 3rd Checkball Sleeve, Reverse Checkball Sleeve, 2 O-Rings)	1	
S34741-4K	Roll Pin Set, 4L80E (Holds Valve Assembly In Valve Body) (Sonnax) (10 Per Set)	1	34994-07
A44741-5	Check Ball, 400 Valve Body (.250")(Steel)	AR	
34741AM-1	Manual Valve, 400 (in Valve Body)	1	
S34741CK	Valve Kit, 4L80E TCC Regulator (Sonnax)	1	34994-01K
T34741CK	Valve Kit, TCC Regulator Assembly (Drop-in, Stock or HD options) TransGo	1	
S34741CCK	Sure Cure Kit, 4L80E 1991-Up (Sonnax) (REquires Tool # T-77754-TL)	1	SC-4L80E
S34741E-4EK	Snap Ring, 4L80E (Holds .684"OD End Plug In Valve Body) (Sonnax) (10 Per Set)	1	34994-15
S34741E-6BK	End Plug Set, 4L80E (Valve Body End Plug .495"OD With O-Rings) (Sonnax) (5 Per Set)	1	34994-13
S34741E-6EK	End Plug Set, 4L80E (Valve Body End Plug .684"OD With O-Rings) (Sonnax) (5 Per Set)	1	34994-14K
S34741EAK	Valve Kit, 4L80E Accumualtor Control (Oversize)(Contains: Valve, Spring, End Plug)(Sonnax) (Requires T-F-34994-TL22)	1	
T-F-34994-TL22	Reamer Kit For S34741EAK	1	
S34741ED-2	Sleeve, 4L80E/4L85E 3rd/Reverse Check Ball (Sonnax)	1	
S34741EQK	Valve Kit, 4L80E/4L85E Overrun Clutch (Smart-Tech)(Sonnax) 1997-Up	1	
S34741ERK	Valve & Sleeve, 4L80E Reverse Boost (Sonnax)	1	
S34741FK	Limit Valve Kit, 4L80E Actuator Feed (Requires T-77754-TL Or T-F-34000-TL16 & T-VB-FIX) (Sonnax)	1	34200-16K
T-77754-TL	Reamer, 4L80E (For S34741FK) (Sonnax)	1	
T-F-34200-TL16	Tool Kit, For S34741FK (Includes: 2 Reamers, Guide Pin, Reamer Guide & Drill Bit) (Must Use T-VB-FIX)	1	
T-VB-FIX	Valve Body Reaming Fixture (Sonnax)	1	
S34741M-1	Manual Valve, 4L80E (In Valve Body) (Sonnax)	1	8678337
S34741M-6K	End Plug With O-Rings, 4L80E Manual Valve (Sonnax)	1	34994-16
S34741MK	Manual Valve Kit, 4L80E (Valve, End Plug & 2 O-Rings) (Sonnax)	1	
S34741S-3	Spring Kit, 4L80E 1-2 & 2-3 Shift Valve (Contains: 2 Springs)(Sonnax)	1	34994-02K
A34741S-3	Spring, 4L80E 1-2 Shift (Updated, Stronger Spring)(This Spring Comes In Our "TTK" Overhaul Kit)	1	
T-48-ACT-TL	Boring Kit, 4L80E Actuator Limit Valve (Oversize) Includes: Boring Guide, Boring Tool, 5 Valves & Springs	1	

PART #	HARD PARTS (Continued)	QTY.	REFERENCE #
VB-101	Valve Body Plate Ball Seat Repair Kit	1	
34747	Plate, 400 Valve Body (6 Check Ball Type)	1	8661468
34747A	Plate, 400 Valve Body (7 Check Ball Type)	1	8670858
34747B	Plate, 400 Valve Body (W/350 Engine) 1989-Up	1	8655791
34747C	Plate, 400 Valve Body (W/Codes FD/FF/FP/FR/FS/FX)	1	8629796
34747D	Plate, 400 Valve Body (W/6.2L Diesel)	1	8655887
34747E	Plate, 4L80E Valve Body (W/Cast # BA/BB/BJ/BM/BN)(W/Stamped Code 0654)	1	8680654
34747EA	Plate, 4L80E Valve Body (W/Stamped Code 8016)	1	8678016
34747EB	Plate, 4L80E Valve Body (W/Stamped Code 5688)	1	8685688
34747EC	Plate, 4L80E Valve Body (W/Stamped Code 5689)	1	8685689
34747ED	Plate, 4L80E Valve Body (W/Cast # 4225)(W/Stamped Code 5690)	1	8685690
34747EF	Plate, 4L80E Valve Body (W/Stamped Code 5691)	1	8685691
34755G	Case Cover, 425 (Channel Plate) 1966-78	1	
34760	Case, 400 Chevy (W/6 Check Balls) 1967-90 (Can Use 34760A With T34165)	1	
34760A	Case, 400 Chevy (W/7 Check Balls) 1987-Up (Can Use This For The 6 Check Ball Case 1967-90 If You Use T34165 Also)	1	
34760B	Case, 400 Buick (W/Round Bell) 1964-76	1	

© Whatever It Takes Transmission Parts. Inc.

PART #	HARD PARTS (Continued)	QTY.	REFERENCE #
34760BA	Case, 400 Buick/Olds/Pontiac/Cadillac 1964-Up	1	
34760C	Case, 400 Cadillac (Flat Top) With Variable Pitch 1965-67	1	
34760D	Case, 400 Chevy 4X4 (Uses a 6 Bolt Dust Cover)(W/6 Check Balls) 1977-90 (Can Use 34760DA With T34165)	1	
34760DA	Case, 400 Chevy 4X4 (Uses a 6 Bolt Dust Cover)(W/7 Check Balls) 1987-Up (Can Use This For The 6 Check Ball Case 1977-90 If You Use T34165 Also)	1	
34760E	Case, 4L80E GM (Gas) Up to 7/91	1	
34760EA	Case, 4L80E GM (Gas) 8/91-94	1	
34760EB	Case, 4L80E GM (Gas)(W/2 Neutral Safety Switch Bosses)(W/Out Cable Bosses) 1995	1	
34760EC	Case, 4L80E GM (Gas)(W/2 Neutral Safety Switch Bosses)(W/Cable Bosses) 1996	1	
34760EE	Case, 4L80E (GM) (6 Bolts To Motor) 1997-98	1	
34760EF	Case, 4L80E (GM) (7 Bolts To Motor) 1999-03 (Has A Raised Boss With-In 2” Of The Front Cooler Line Boss)	1	
34760EG	Case, 4L80E (GM) (7 Bolts To Motor) 2004-E08 (The Front Cooler Line Boss Is The Only Raised Boss There)(Cooler Line Fitting Threads In The Case Are .450”ID)	1	
34520EH	Case, 4L80E (GM)(7 Bolts To Motor) 2009-Up (Cooler Line Fitting Threads In The Case Are .510”ID)	1	
34760EJ	Case, 4L80E Jaguar (Round Bell) 1993-96	1	
34760F	Case, 400 Jeep 4X4 (Starter on Passenger Side) 1973-85	1	
34760FA	Case, 400 Jeep 4X4 (Starter on Driver Side) 1986-Up	1	
34760G	Case, 425 FWD 1966-78	1	

PART #	CASE COMPONENTS	QTY.	REFERENCE #
34761	Inserts, 400/4L80E Case Saver Inserts (5 Per Pack)	1	
34761A	Case Saver, 400 Center Support Fix (High Performance)(Adapt-A-Case)	1	

PART #	HARD PARTS (Continued)	QTY.	REFERENCE #
34765	Pan, 400 (W/3 Dimples) 1964-67	1	
34765A	Pan, 400 (W/2 Dimples) 1968-Up	1	
34765D	Pan, 400 Deep 1964-Up	1	8679994
34765DHP	Pan, 400 Deep (Aluminum With Spacer & Bolts)(Hi-Performance)	1	
34765DP	Pan, 4L80E 2WD (W/Drain Plug on The Side) 1991-96	1	
34765E	Pan, 4L80E (W/Out Drain Plug on The Side) 1991-96	1	
34765EHP	Pan Kit, 4L80E (Deep, Aluminum W/Spacer & Bolts) 1991-13 (Transmission Specialties)	1	
34765EA	Pan, 4L80E (W/Drain Plug on Bottom) 1997-Up (Pan Is Shallow On One End)	1	
34765EAK	Pan Kit, 4L80E (With Drain Plug On Bottom) (With Pan Gasket) 1997-Up (Pan Is Shallow On One End)	1	24204278
34765EAA	Pan, 4L80E (W/Out Drain Plug On Bottom) 1997-Up (Pan Is Shallow On One End)	1	
34765EJ	Pan, 4L80E Jaguar 1993-96	1	
34770	Extension Housing, 400 (13 5/8” Long) Cadillac 1968-70	1	
34770A	Extension Housing, 400 (9 5/8” Long)(Uses Large Rear Seal)(Uses 400 Rear Seal)	1	
34770B	Extension Housing, 375 (9 5/8” Long)(Uses 350 Rear Seal) 1972-76	1	
34770BA	Extension Housing, 375 (9 5/8” Long)(Uses 350 Rear Seal) (7 3/16” From Rear Seal To Mount) 1972-76	1	
34770C	Extension Housing, 400 Truck (4” Long)(Uses a Bolt-On Yoke)(Uses Large Rear Seal)	1	
34770D	Extension Housing, 400 Truck (4” Long)(Uses Medium Rear Seal)	1	
34770E	Extension Housing, 4L80E (7 1/4” Long)(Truck, For Bolt-On Yoke)	1	
34770EA	Extension Housing, 4L80E (6 5/8” Long)(Truck)(For Bolt On Yoke)(For Bolt On Parking Brake)	1	
34770EB	Extension Housing, 4L80E (5 3/4” Long)	1	
34770EC	Extension Housing, 4L80E (7 1/4” Long)(Truck, For Bolt-On Yoke)(For Bolt-On Parking Brake)	1	
34770ED	Extension Housing, 4L80E (5 3/8” Long)(Truck, For Bolt-On Yoke)(For Bolt On Parking Brake)	1	
34770EDA	Extension Housing, 4L80E (5 1/2” Long) Cast # 8676531 (Has 1 Large Mounting Bolt On Bottom & 4 Small Mounting Bolts On Bottom)	1	
34770EE	Extension Housing, 4L80E 4x4 (2 5/8” Long)(Cast Iron)	1	
34770EF	Extension Housing, 4L80E 4x4 (2 5/8” Long) Aluminum (Cast # 15724251)	1	
34770EG	Extension Housing, 4L80E 4x4 (2 5/8” Long) Aluminum (Cast # 15724745)	1	
34770F	Extension Housing, 400 Jeep 4X4 (5 1/8” Long)	1	
34770FA	Extension Housing, 400 Chevy 4X4 (Used W/208 Transfer Case)	1	
34774	Speed-O Housing, 400 (Uses 34-39 Teeth Speed-O Gear)	1	1362294
34774A	Speed-O Housing, 400 (Uses 40-43 Teeth Speed-O Gear)	1	1362293
34774AHD	Speed-O Housing, 400 (Aluminum)(Uses 40-43 Teeth Speed-O Gear)	1	
34774B	Speed Sensor Housing, 400 (2 Prong Connector) (Aluminum Housing)	1	
34774HD	Speed-O Housing, 400 (Aluminum)(Uses 34-39 Teeth Speed-O Gear)	1	
34775B	Bolt, 400 Converter (SAE)	3-6	9440224
44775B	Bolt, 400 Converter Coarse Thread (With Flange)	3-6	

© Whatever It Takes Transmission Parts. Inc.

44775C	Bolt, 400/4L80E Converter (Metric) 15mm Hex Head	3-6	
74775E	Bolt, 400/4L80E Converter (Metric) (Allen Head)	3-6	
74775G	Bolt, 4L80E Converter (Metric) (Allen/Hex Head) Has Both Allen & Hex Head)	3-6	11589040
34777AK	Bolt Set, 400 Pump to Case 1964-69 (8 Per Set)	1	
34777EK	Bolt Set. 4L80E Pump to Case 1991-Up (7 Per Set)	1	
34777K	Bolt Set. 400 Pump to Case 1970-Up (6 Per Set)	1	
34778EK	Bolt Set, 4L80E Pump Body to Stator 1991-Up (5 Per Set)	1	
34778K	Bolt Set, 400 Pump Body to Stator 1964-Up (5 Per Set)	1	
34779-5	Nut, 4L80E Drain Plug Bolt Nut (Inside Pan) 1991-Up	1	
34779-6	Bolt, 4L80E Drain Plug Bolt 1991-Up	1	
34779EK	Bolt Set. 4L80E Pan to Case (10MM) 1991-Up (17 Per Set)	1	
34779K	Bolt Set. 400 Pan to Case (5/16") 1964-Up (13 Per Set)	1	
34780EK	Bolt Set. 4L80E Rear Servo Cover (10MM) 1991-Up (Can Use 34779EK)	1	
34780K	Bolt Set. 400 Rear Servo Cover (3/8") 1964-Up (6 Per Set)	1	
34781EK	Bolt Set, 4L80E Extension Housing to Case (15MM) 1991-Up (6 Per Set)	1	
34781K	Bolt Set, 400 Extension Housing to Case (3/8") 1964-Up (6 Per Set)	1	
34782EK	Bolt Set, 4L80E Valve Body to Case 1991-Up (27 Per Set)	1	
34782K	Bolt Set, 400 Valve Body to Case 1964-Up (11 Per Set)	1	
34783	Bolt, 400 Center Support to Case (15/16" Long) 1964-Up	1	8670757
34783A	Bolt, 4L80E Center Support to Case (1 3/8" Long) 1991-Up	1	8661762
36783B	Bolt Set, 4L80E Sensor Bracket (3 Per Set)	1	
34783EK	Bolt Set, 4L80E Valve Body To Case (27 Pieces)	1	
34784	Bolt, 4L80E 4th Clutch Housing to Case 1991-Up	1	8661640
34785K	Bolt Set, 400 Governor Cover 1964-Up (4 Per Set)(Also Fits Mod. & Speed-O Bracket)	1	
34786K	Bolt Set, 400 Kickdown Switch 1964-Up (2 Per Set)	1	
34789	Spacer, 400 Filter Bolt (Deep Pan Type)	1	8629523
34790K	Bolt Kit, 400 Filter (Deep Pan Type)(Contains: 1 Bolt & 1 Spacer)	1	8633208
34790A	Bolt, 400 Filter (Shallow Pan Type) 1964-Up	1	8633207
34797	Nut, 400 Holds External Shift Lever (SAE) 1964-Up	1	
34797B	Nut, 400/4L80E Holds External Shift Lever (Metric)	1	
34798	Bolt, 400 Holds Yoke to Output Shaft	1	
34798-4	Washer, 400 Under Bolt That Holds Output Shaft Yoke on	1	
34834	Tube, 400 Filter to Case (Shallow Pan)	1	8626886
44839	Pan Magnet, 400 Rectangular	1	
44839A	Pan Magnet, 400 Round	1	3787240
34841	Yoke, 400 (Bolt-On Type)(5 7/8" Long)	1	
34841A	Yoke, 400 (Slip-On Type)	1	
34842	Bracket, 400 Holds Speed-O Housing to Case 1964-Up	1	
74842	Bracket, 400 Holds Large Speed-O Housing In Place (Metric Bolt)	1	
34843	Bracket, 400 Holds Modulator to Case 1964-Up	1	8626886
34843E	Bracket, 4L80E Solenoid (2nd Design)	1	8684217
34845E	Reluctor, 4L80E Output Speed Sensor (On Rear Planet)	1	
S34846EK	Bracket, 4L80E Wiring Harness Connector (Sonnax)	1	34998-01K
74846E	Bracket, 4L80E Shift Cable (Uses 2 Pan Bolts 3" Apart) 1996 (With No Shift Cable Bosses On Case)(Also Allows 1992-95 Cases To Be Used For 1996-Up) (Sonnax)	1	
74846EB	Bracket, 4L80E Shift Cable (Case Mount)(2 Bolts 5" Apart)(With Wire Harness Bracket)	1	
74846EC	Bracket, 4L80E Shiaft Cable (Case Mount)(2 Bolts 5" Apart)(No Wire Harness Bracket)	1	
34847	Gear, 400 Speed-O Drive (15 Teeth)(Metal)	1	
34847A	Gear, 400 Speed-O Drive (15 Teeth)(Grey, Plastic)	1	8629547
34847AF	Gear, 400 Speed-O Drive (21 Teeth)(Metal)	1	
34847R	Rotor, 400 Speed-O Reluctor	1	8655315
34848A	Gear, 400 Speed-O Driven (34 Teeth Green W/Plastic Shaft) 1964-Up	1	
34848B	Gear, 400 Speed-O Driven (35 Teeth Orange W/Plastic Shaft) 1964-Up	1	9780387
34848C	Gear, 400 Speed-O Driven (36 Teeth White W/Plastic Shaft) 1964-Up	1	1359270
34848D	Gear, 400 Speed-O Driven (37 Teeth Red W/Plastic Shaft) 1964-Up	1	1359271
34848E	Gear, 400 Speed-O Driven (38 Teeth Blue W/Plastic Shaft) 1964-Up	1	1359272
34848F	Gear, 400 Speed-O Driven (39 Teeth Brown W/Plastic Shaft) 1964-Up	1	1359273
34848G	Gear, 400 Speed-O Driven (40 Teeth Black W/Plastic Shaft) 1964-Up	1	1362048
34848H	Gear, 400 Speed-O Driven (41 Teeth Yellow W/Plastic Shaft) 1964-Up	1	1362195
34848HA	Gear, 400 Speed-O Driven (42 Teeth Green W/Plastic Shaft) 1964-Up	1	1362049
34848J	Gear, 400 Speed-O Driven (43 Teeth Purple W/Plastic Shaft) 1964-Up	1	1362196
34848K	Gear, 400 Speed-O Driven (44 Teeth Gray W/Plastic Shaft) 1964-Up	1	9780470
34848L	Gear, 400 Speed-O Driven (45 Teeth Blue W/Plastic Shaft) 1964-Up	1	9775187
34848T	Speed Sensor, 400 Electronic (Use 34436)	1	
44848	Gear, 400 Speed-O Driven (19 Teeth White)	1	
44848A	Gear, 400 Speed-O Driven (20 Teeth Blue)	1	
44848B	Gear, 400 Speed-O Driven (21 Teeth Red)	1	
44848C	Gear, 400 Speed-O Driven (22 Teeth Gray)	1	
44848D	Gear, 400 Speed-O Driven (23 Teeth Black)	1	
44848E	Gear, 400 Speed-O Driven (24 Teeth Yellow)	1	
34849	Clip, 400 Speed-O Gear 1964-Up	1	8626089

© Whatever It Takes Transmission Parts. Inc.

PART #	HARD PARTS (Continued)	QTY.	REFERENCE #
34852	Cushion Spring, 4L80E Intermediate Clutch (8 Inner Tabs) 1997-Up	1	
34861	Snap Ring, 4L80E Holds 4th Clutch Pressure Plate in 1991-Up	1	8677887
34862	Snap Ring, 4L80E Holds 4th Clutch Pressure Retainer in 1991-Up	1	
34864	Snap Ring, 4L80E Holds Overrun Clutch Pressure Plate in 1991-Up	1	8661572
34865	Snap Ring, 4L80E Holds Overrun Clutch Retainer in Drum (/079") 1991-01	1	8661568
34865A	Snap Ring, 4L80E Holds Overrun Clutch Retainer In Drum (.060") 2001-Up	1	24216149
34868	Snap Ring, 4L80E Holds Overdrive Planet to Pinion Gear Retainer 1991-Up	1	8679439
34872	Snap Ring, 400/4L80E Center Support to Case 1964-Up	1	8623437
34873	Snap Ring, 4L80E Holds Intermediate Clutch Pressure Plate in (.092") 1991-Up	1	8623149
34874	Snap Ring, 400/4L80E Holds Retainer to Center Support 1964-Up	1	8623153
34877	Snap Ring, 400/4L80E Holds Retainer to Forward Drum 1964-Up	1	8623105
34878	Snap Ring, 400/4L80E Holds Forward & Direct Clutch Pressure Plate in 1964-Up	2	8623112
34879	Snap Ring, 400/4L80E Holds Direct Clutch Retainer to Drum 1964-Up	1	8623105
34880	Snap Ring, 4L80E Holds Turbine Shaft to Overdrive Planet (.040") 1991-Up	1	
34880A	Snap Ring, 4L80E Holds Turbine Shaft to Overdrive Planet (.080") 1991-Up	1	
34883	Snap Ring, 400/4L80E Center Support to Case (Rear)(.042") 1964-Up	1	8626816
34886	Snap Ring, 400 Holds Sprag Retainer to Drum 1964-Up	1	8623120
34886E	Snap Ring, 4L80E Holds Sprag Retainer to Drum 1991-Up	1	8675558
44887	Snap Ring, 400 Holds Seal to Speed-O Housing 1964-Up	1	
34889	Snap Ring, 400/4L80E Holds Rear Ring Gear to Main Shaft 1964-Up	1	8623212
34894	Snap Ring, 400/4L80E Holds Output Shaft to Rear Planet 1964-Up	1	8626173
34895	Snap Ring, 4L80E Holds Rear Case Seal to Case 1991-Up	1	8675524
34905	Servo Assembly, 400 Front (With Aluminum Piston)	1	
34905A	Servo Assembly, 400 Front (With Steel Piston)	1	
34905B	Servo Assembly, 4L80E Front (With 2.535" Long Pin) 1991-98	1	
34905C	Servo Assembly, 4L80E Front (With 2.735" Long Pin) 1999-Up	1	
34906	Spring, 400/4L80E Front Servo 1964-Up	1	8623489
34907	Piston, 400/4L80E Front Servo (W/3 Tabs) 1965-93	1	8678537
34907A	Piston, 4L80E Front Servo (No tabs) 1994-Up	1	24200418
S34907AAK	Piston Assembly, 400/4L80E Front Servo (W/Sleeve & Teflon Ring)(Sonnax)	1	
34908	Pin, 400/425 Front Servo 1964-Up	1	8626879
34908B	Pin, 4L80E Front Servo (2.535" Long) 1991-98	1	8661808
34908C	Pin, 4L80E Front Servo (2.735" Long) 1999-up	1	24223081
34910	Servo Assembly, 400 Rear (Flat Piston)	1	
34910A	Servo Assembly, 4L80E Rear (W/Raised Hump on Piston)	1	
34910B	Servo Assembly, 4L80E Rear (Flat Piston)(Can Use 34910A)	1	
34912	Piston, 400/4L80E Rear Servo 1964-Up	1	
S34912A-5K	Spacer Kit, 4L80E Reverse Servo Piston 1996-Up (Sonnax)(Contains: 1 Spacer, 2 Washers & 1 E-Clip)	1	
34912AAC	Piston, 400/4L80E Rear Servo (Heavy Duty) 1964-Up (Adapt-A-Case)	1	
34913A	Pin, 400/4L80E Rear Servo (4.250" Long) 1964-91	1	8624139
34913B	Pin, 400/4L80E Rear Servo (4.278" Long) 1964-91	1	8627192
34913C	Pin, 400/4L80E Rear Servo (4.306" Long) 1964-91	1	8624140
34913D	Pin, 400/4L80E Rear Servo (4.334" Long) 1964-91	1	8627193
34913E	Pin, 400/4L80E Rear Servo (4.362" Long) 1964-91	1	8624141
34913F	Pin, 400/4L80E Rear Servo (4.387" Long) 1964-91	1	8627194
34913H	Pin, 400/4L80E Rear Servo (4.421" Long) 1964-91	1	8627195
34913JA	Pin, 4L80E Rear Servo (4.695" Long) 1992-Up	1	
34913JB	Pin, 4L80E Rear Servo (4.721" Long) 1992-Up	1	
34913JC	Pin, 4L80E Rear Servo (4.750" Long) 1992-Up	1	
34913JD	Pin, 4L80E Rear Servo (4.777" Long) 1992-Up	1	
34913JE	Pin, 4L80E Rear Servo (4.805" Long) 1992-Up	1	
34913JF	Pin, 4L80E Rear Servo (4.833" Long) 1992-Up	1	
34913JG	Pin, 4L80E Rear Servo (4.861" Long) 1992-Up	1	
34914	Cover, 4L80E Rear Servo 1991-Up	1	8676600
34925	Accumulator Assembly, 400 (Late, No Legs on piston)	1	
34925A	Accumulator Assembly, 400 (Early, W/3 Legs on piston)	1	
34926	Spring, 400 Accumulator (Yellow)	1	8625426
34926A	Spring, 400 Accumulator (Red)	1	8623654
34926B	Spring, 400 Accumulator (Blue)	1	8626775
34927	Piston, 400 Accumulator (Aluminum W/3 Legs)	1	8626883
34930E	Accumulator Assembly, 4L80E 3rd/4th (1 Tower Type Without The Torque Signal Compensator Valve)	1	
34930EB	Accumulator Assembly, 4L80E 3rd/4th (2 Tower Type With The Torque Signal Compensator Valve)	1	
34931	Spring, 4L80E 3rd Clutch Accumulator 1991-Up	1	8675596
34932	Piston, 4L80E 3rd Clutch Accumulator 1991-Up	1	8683088
S34933X	Pin Kit, 400/4L80E Accumulator (Oversized)(Sonnax)	1	34105-01K
S34933XK	Pin & Reamer Kit, 400/4L80E Accumulator (Oversized)(Sonnax)	1	34105-02K

© Whatever It Takes Transmission Parts. Inc.

34934E	Cover, 4L80E 2-3 & 3-4 Accumulator 1991-93	1	8689993
34934EA	Cover, 4L80E 2-3 & 3-4 Accumulator 1994-95	1	8684220
34936	Spring, 4L80E 4th Clutch Accumulator 1991-Up	1	8675634
34937	Piston, 4L80E 4th Clutch Accumulator 1991-Up	1	24206749
S34937K	Repair Kit, 4L80E 4th Accumulator (Piston, Sleeve, Spring) Needs No Machining (Sonnax)	1	34805-01K
34938	Pin, 4L80E 4th Clutch Accumulator 1991-Up	1	8661644
34941	Spring, 4L80E Torque Signal Compensator 1991-Up	1	8675603
34942	Valve, 4L80E Torque Signal Compensator (Spool Valve) 1991-Up	1	8661828
34946	Spring, 400/4L80E Rear Servo (Blue)	1	8624256
34946A	Spring, 400/4L80E Rear Servo (Yellow)	1	8624391
34946B	Spring, 400/4L80E Rear Servo (Black)	1	8670753
34946C	Spring, 400/4L80E Rear Servo (Green/Orange or Violet)	1	8675778
34947	Piston, 4L80E Rear Accumulator 1991-Up	1	
34947K	Piston, 4L80E Rear Accumulator (With Seals) 1991-Up	1	
34958	Tin Spacer, 400/4L80E Front Pump to Sprag	1	
34958E	Yoke Tube, 4L80E Output Shaft To Yoke (2.975" Long)(2.198"OD On Largest OD)(Tin) (#958 In 350 Picture) 1991-Up	1	
34960E	Piston, 4L80E Overrun Clutch (Bonded) 1991-Up	1	8661567
34960EK	Piston Kit, 4L80E (Bonded)(Direct/Forward/Overrun) 1997-Up	1	
34960EHP	Piston, 4L80E Overrun Clutch (Bonded) 1991-Up (Hi-Per Blue)	1	
34960EHPK	Piston Kit, 4L80E (Bonded)(Direct/Forward/Overrun) 1997-Up (Hi-Performance Blue)(Does NOT Come w/Bonded Lipseal Sleeve, Forward Clutch Inner)(.070")(Sell 34334D Seperately)	1	
34961	Piston, 4L80E 4th Clutch 1991-Up	1	8661271
34962	Piston, 400/4L80E Intermediate Clutch (Aluminum) (Cast # 86616757)	1	
34962EA	Piston, 4L80E Intermediate Clutch (Aluminum) Cast # 24202553	1	
34964	Piston, 400 Forward Clutch (Early, Aluminum)	1	8670199
34964A	Piston, 400 Forward Clutch (Late, Steel)	1	
34964E	Piston, 400/4L80E Forward Clutch 1991-96	1	8675508
34964EA	Piston, 400/4L80E Forward Clutch (Stamped Steel W/Bonded Lip Seal) 1997-Up	1	24204957
34965	Piston, 400 Direct Clutch (5 Clutch)(Early, Aluminum W/Check Ball)	1	
34965A	Piston, 400 Direct Clutch (5 Clutch)(Late, Steel)	1	
34965B	Piston, 400 Direct Clutch (5 Clutch)(Late, Aluminum W/Out Ck Ball)	1	
34965C	Piston, 400 Direct Clutch (6 Clutch)(Early, Aluminum W/Ck Ball)	1	
34965D	Piston, 400 Direct Clutch (6 Clutch)(Late, Steel)	1	
34965E	Piston, 400/4L80E Direct Clutch (6 Clutch)(Late, Alum W/Out Ck Ball)(Disc Spring Type)	1	8675511
34965EA	Piston, 4L80E Direct Clutch (W/Bonded Rubber) 1997-Up	1	24204961
34970	Retainer W/Spring, 4L80E Overrun Clutch Return 1991-00	1	8661629
34970A	Retainer W/Spring, 4L80E Overrun Clutch Return 2001-Up	1	24216366
34971	Retainer W/Spring, 4L80E 4th Clutch Return 1991-Up	1	8661577
34972E	Spring W/Retainer, 4L80E Intermediate Clutch Return (12 Springs) 1991-Up	1	8675518
34972K	Spring Set, 400 Intermediate Clutch Return (3 Springs) 1964-Up	1	
34974	Spring, 400 Forward & Direct Clutch Return 1964-Up	16	8624101
34974A	Retainer W/Spring, 4L80E Forward & Direct Clutch Return 1991-Up	1	8661764
34975	Spring, 400 Direct Clutch Return 1964-Up (Use 34974)	16	8624101
34975A	Retainer W/Spring, 4L80E Direct Clutch Return 1991-Up (Use 34974A)	1	8661764
34980	Stop Ring, 400/4L80E Rear Sprig Stop	1	
34982	Retainer, 400 Intermediate Clutch Return Spring (Steel) 1964-Up	1	8679935
34984	Retainer, 400/4L80E Forward Return Spring 1964-Up	1	
34985	Retainer, 400/4L80E Direct Return Spring 1964-Up	1	
34991	Linkage Assembly, 400 Internal (O-Ring Type) 1964-65	1	
34991-1	Lever, 400 Manual Detent Spring 1964-Up	1	8625773
34991-4	Shaft, 400 Manual Lever 1965-Up	1	8679990
S34991-4K	Shaft & Nut, 400 Manual Lever 1964-Up (Sonnax)	1	
34991A	Linkage Assembly, 400 Internal (Seal Type) 1965-Up	1	
34991E	Linkage Assembly, 4L80E Internal 1991-95	1	
34991E-4	Shaft, 4L80E Manual Lever 1991-94	1	
34991EA	Linkage Assembly, 4L80E Internal 1996-Up	1	
34992	Shift Lever, 400 External (Column Shift) 1964-Up	1	
74992	Shift Lever, 4L80E External (Column Shift) 1991-Up	1	
74992EA	Shift Lever, 4L80E (Cast # 1572165) Has A Tapered Tip (Used With Cable Bracket That Bolts To Case)	1	
34994E	Actuator Rod, 4L80E Park Pawl (Updated)	1	24200173
34995	Park Pawl Assembly, 400 1964-Up	1	
34995E	Park Pawl Assembly, 4L80E 1991-Up	1	
34995-1	Lever, 400 Park Pawl 1964-Up	1	8623037
34996	Fitting, 400 Cooler Line (3/8" Lines)(W/Pipe Threads) 1964-77	2	
44996	Fitting, 400 Cooler Line (5/16" Lines)(W/Pipe Threads) 1964-77	2	
44996A	Fitting, 400/4L80E Cooler Line (5/16" Lines)(W/Machine Threads) 1978-96	2	
T34996B	Fitting, 4L80E Rear Cooler Line (Screw-In)(W/Machine Threads) 1997-98 (For 3/8" Lines) (Gold Colored)(Teckpak)	1	
S34996BK	Cooler Line Conversion Kit, 4L80E (Converts Late Cases To The Early Style) (Sonnax)	1	34918-01K

© Whatever It Takes Transmission Parts. Inc.

PART #	HARD PARTS (Continued)	QTY.	REFERENCE #
T34996BA	Fitting, 4L80E Front cooler Line (Screw In)(With Machine Threads) 1997-05 (For 3/8” Lines) (Gold Colored)(Teckpack)	1	
34996E	Fitting, 4L80E Rear Cooler Line (Push-In Type) 1999-07	1	24233367
T34996EB	Fitting, 4L80E Quick Connect Line Fitting (Gold Colored)(Clip In Type)(Short)(Teckpak)	1	
T34996EC	Fitting, 4L80E Cooler Line (Clip In Type)(Long)(Teckpak)	1	
74996B	Fitting, 4L80E Front Cooler Line (Push-In Type) 1999-07	1	
34996G	Fitting, 4L80E Rear Cooler Line (Push-In Type)(Metric Thread To Case) E2008-Up	1	
34996GA	Fitting, 4L80E Front Cooler Line (Push-In Type)(Metric Thread To Case) (Aluminum) E2008-Up	1	
T36996G	Fitting, 4L85E (Rear)(3/8” Clip Type)(Silver Colored)(Teckpak)	1	
T36996GA	Fitting, 4L85E Front Cooler Line(Push In Type)(Metric Thread To Case)(Steel, Silver Colored) E2008-Up (Teckpak)	1	
T34996H	Fitting, 4L85E Rear Cooler Line (Screw-In Type)(With 3/8” Screw In Line)(Teckpak)	1	
T34996HA	Fitting, 4L85E Front Cooler Line (Screw-In Type)(With 3/8” Screw In Line)(Teckpak)	1	
34999	Oil Tube Set, 400 Valve Body to Case 1964-Up	1	8679342
34999E	Oil Tube, 4L80E Valve Body to Case (2wd) 1991-Up	1	
34999E-4	Bracket, 4L80E Holds Oil Tubes on 1997-Up	1	
34999EA	Oil Tube, 4L80E Valve Body to Case (4X4) 1991-Up	1	

© Whatever It Takes Transmission Parts. Inc.

© Whatever It Takes Transmission Parts. Inc.

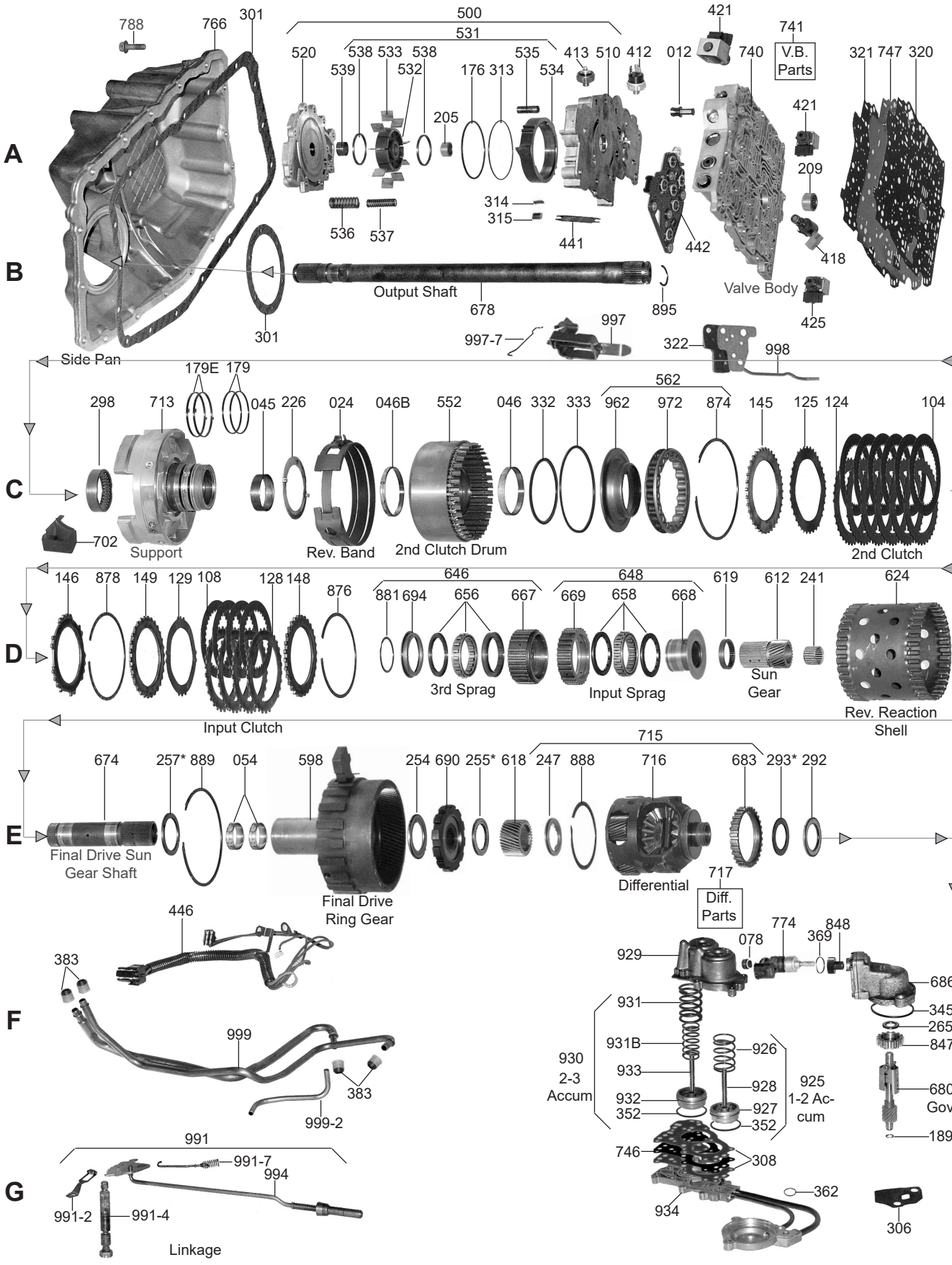

000 P&R Kit
002 OHK Kit
004 Master L/Steel Kit
006 Master W/Steel Kit
011 Filter Kit
030 Bushing Kit
119 Friction Module
139 Steel Module
165 V.B. Kit
175 Ring Kit
200 Washer Kit
201 Bearing Kit
400 Tech Manual

© Whatever It Takes Transmission Parts. Inc.

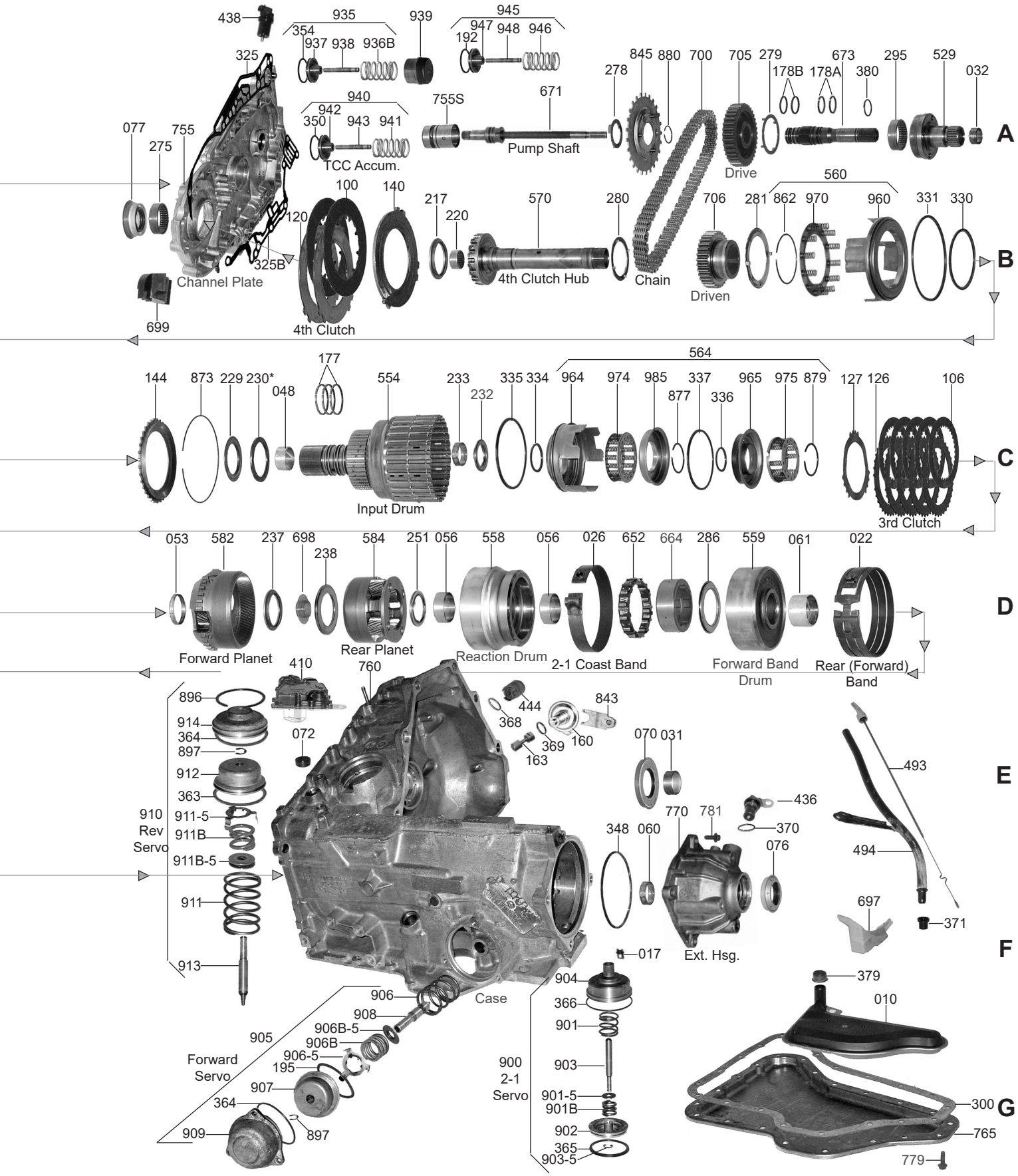

© Whatever It Takes Transmission Parts. Inc.

PART #	PAPER & RUBBER KIT	QTY.	REFERENCE #
84000	Paper & Rubber Kit, 440-T4 1983-92 (For Allante Use 84001 Also)	1	
84000E	Paper & Rubber Kit, 4T60E 1991-Up	1	
84000EW	Paper & Rubber Kit, 4T60E (Bonded Pan Gasket) 1991-Up	1	
84000G	Paper & Rubber Kit, 4T65E 1997-Up	1	
84000GW	Paper & Rubber Kit, 4T65E (Bonded Pan Gasket)(W/Out Side Cover Gasket) 1997-Up	1	
84001	Sub Kit, 440-T4 (Allante) Valve Body Gaskets & O-Rings 1987-92	1	
84001G	Sub Kit, 4T65E (Aztek/Venture & Rendezvous/Montana AWD) (Transfer Case) 2001-Up	1	
84001H	Sub Kit, 4T65E (Volvo) 1999-Up (Valve Body Sub Kit Only)	1	

PART #	OVERHAUL KIT	QTY.	REFERENCE #
84002	Overhaul Kit, 440-T4 (W/Vespel Rings) 1983-92 (For Allante Use 84001 Also)	1	
84002E	Overhaul Kit, 4T60E 1992-Up (For Bonded Pistons Sell A84962E & A84965A)	1	
84002EW	Overhaul Kit, 4T60E (Bonded Pan Gasket) 1991-Up	1	
84002G	Overhaul Kit, 4T65E 1997-Up	1	
84002GW	Overhaul Kit, 4T65E (W/Bonded Bottom Pan Gasket) 1997-Up (Without Side Cover Gasket) (For Aztek/Venture AWD Sell 84001G Also)(For Bonded Pistons Sell A84962G & A84965G)	1	
84002HW	Overhaul Kit, 4T65E (Volvo) (With Bonded Bottom Pan Gasket) 1999-Up (Without Side Cover Gasket) (For Bonded Pistons Sell A84962G & A84965G)	1	

PART #	MASTER L/STEEL KIT	QTY.	REFERENCE #
84004	Master L/Steel Kit, 440-T4 (W/Vespel Rings) 1983-E86	1	
84004A	Master L/Steel Kit, 440-T4 (W/Vespel Rings) 1983-88 (For Allante Use 84001 Also)	1	
84004B	Master L/Steel Kit, 440-T4 (W/Vespel Rings) 1989-92 (For Allante Use 84001 Also)	1	
84004E	Master L/Steel Kit, 4T60E 1991-E94 (Uses .090” Input Frictions)(For Bonded Pistons Sell A84962E & A84965A)	1	
84004EW	Master L/Steel Kit, 4T60E (Bonded Pan Gasket) 1991-E94(For Bonded Pistons Sell A84962E & A84965A)	1	
84004EA	Master L/Steel Kit, 4T60E L1994-Up (Uses .065” Input Frictions)(For Bonded Pistons Sell A84962E & A84965A)	1	
84004EAW	Master L/Steel Kit, 4T60E (Bonded Pan Gasket) L1994-Up (For Bonded Pistons Sell A84962E & A84965A)	1	
84004G	Master L/Steel Kit, 4T65E 1997-Up (For Bonded Pistons Sell A84962E & A84965A)	1	
84004GW	Master L/Steel Kit, 4T65E (W/Bonded Bottom Pan Gasket) 1997-02 (W/Out Side Cover Gasket) (For Aztek/Venture AWD Sell 84001G Also)(For Bonded Pistons Sell A84962G & A84965G)	1	
84004GAW	Master L/Steel Kit, 4T65E (W/Bonded Bottom Pan Gasket) 2003-Up (W/Out Side Cover Gasket) (30 Internal Teeth Input Friction)(For Aztek/Venture AWD Sell 84001G Also)(For Bonded Pistons Sell A84962G & A84965G)	1	
84004HW	Master L/Steels Kit, 4T65E (Volvo)(W/Bonded Bottom Pan Gasket) 1999-02 (W/Out Side Cover Gasket)(For Bonded Pistons Sell A84962G & A84965G)	1	
84004HAW	Master L/Steels Kit, 4T65E (Volvo)(W/Bonded Bottom Pan Gasket) 2003-Up (W/Out Side Cover Gasket)(For Bonded Pistons Sell A84962G & A84965G)	1	

PART #	MASTER W/STEEL KIT	QTY.	REFERENCE #
84006	Master W/Steel Kit, 440-T4 (W/Vespel Rings) 1983-E86	1	
84006A	Master W/Steel Kit, 440-T4 (W/Vespel Rings) L1986-88 (For Allante Use 84001 Also)	1	
84006B	Master W/Steel Kit, 440-T4 (W/Vespel Rings) 1989-92 (For Allante Use 84001 Also)	1	
84006E	Master W/Steel Kit, 4T60E 1991-E94 (Uses .090” Input Frictions)(For Bonded Pistons Sell A84962E & A84965A)	1	
84006EW	Master W/Steel Kit, 4T60E (Bonded Pan Gasket) 1991-E94 (For Bonded Pistons Sell A84962E & A84965A)	1	
84006EA	Master W/Steel Kit, 4T60E L1994-Up (Uses .065” Input Frictions)(For Bonded Pistons Sell A84962E & A84965A)	1	
84006EAW	Master W/Steel Kit, 4T60E (Bonded Pan Gasket) L1994-Up (For Bonded Pistons Sell A84962E & A84965A)	1	
84006G	Master W/Steel Kit, 4T65E 1997-Up (For Bonded Pistons Sell A84962E & A84965A)	1	
84006GW	Master W/Steel Kit, 4T65E (W/Bonded Pan Gasket) 1997-Up (W/Out Side Cover Gasket) (For Aztek/Venture AWD Sell 84001G Also)(For Bonded Pistons Sell A84962G & A84965G)	1	
84006GAW	Master W/Steel Kit, 4T65E (W/Bonded Bottom Pan Gasket) 2003-Up (W/Out Side Cover Gasket) (30 Internal Teeth Input Friction)(For Aztek/Venture AWD Sell 84001G Also)(For Bonded Pistons Sell A84962G & A84965G)	1	
84006HW	Master W/Steels Kit, 4T65E (Volvo) (With Bonded Bottom Pan Gasket) 1999-02 (Without Side Cover Gasket)(For Bonded Pistons Sell A84962G & A84965G)	1	
84006HAW	Master W/Steels Kit, 4T65E (Volvo) (With Bonded Bottom Pan Gasket) 2003-Up (Without Side Cover Gasket)(For Bonded Pistons Sell A84962G & A84965G)	1	

© Whatever It Takes Transmission Parts. Inc.

PART #	FILTER	QTY.	REFERENCE #
84010	Filter, 440-T4 1983-92	1	8662853
84010E	Filter, 4T60E/4T65E 1991-Up	1	24205416

PART #	FILTER KIT	QTY.	REFERENCE #
84011	Filter Kit, 440-T4 1983-92	1	
84011E	Filter Kit, 4T60E 1991-Up	1	
84011EW	Filter Kit, 4T60E/4T65E (Bonded Pan Gasket) L1994-Up	1	

PART #	MISC. FILTERS	QTY.	REFERENCE #
84012	Screen, 440-T4/4T60E/4T65E Oil Pump Pressure 1983-Up	1	8656752
84014	Screen, 440-T4 Governor Pressure (Inside # 934) 1983-88	1	8627509
84014A	Screen, 440-T4 Governor Pressure 1989-Up	1	8660770
84015	Screen, 440-T4 3rd Clutch Exhaust 1983-Up	1	8658208
84015D	Screen, 440-T4 Orifice 1983-Up	1	8635111
84016	Screen, 440-T4/4T60E Solenoid	1	
84016E	Screen, 4T60E Shift Solenoid 1991-Up	3-4	8651658
84016EK	Screen Kit, 4T60E Force Motor Solenoid (4 Piece Kit) 1991-Up	1	
84016P	Screen, 440-T4 Solenoid (In Valve Body) E1985	1	
84016PA	Screen, 440-T4/4T60E TCC Solenoid L1985-Up	1	24203263
84017A	Screen, 4T60E/4T65E 2-1 Servo (Goes in # 904 Housing) 1991-Up	1	8651754

PART #	BANDS	QTY.	REFERENCE #
84022	Band, 440-T4 1-2 (Rear) 1983-Up	1	8675987
84022E	Band, 4T60E/4T65E Forward (Rear) 1991-Up	1	8651614
84022EA	Band, 4T65E Forward (Rear) (High Energy) 2001-Up	1	
84022EAHD	Band, 4T65E Forward (Rear)(Heavy Duty)(Relined)(Fits V8 5.3L)(Lugs Are Welded On)	1	
84024	Band, 440-T4 Reverse (Front) 1983-Up	1	8675986
84024A	Band, 4T60E/4T65E Reverse (Front) 1991-Up	1	8651653
84024AA	Band, 4T65E Reverse (Front) (High Energy) 2001-Up	1	
84026A	Band, 4T60E/4T65E 2-1 Coast (Center) 1991-Up	1	8651624
84026G	Band, 4T65E 2-1 Coast (Center) (Hi-Energy) 2000-Up	1	

PART #	BUSHINGS	QTY.	REFERENCE #
84030	Bushing Kit, 440-T4 1983-91	1	
84030E	Bushing Kit, 4T60E 1991-95	1	
84030EA	Bushing Kit, 4T60E/4T65E (13 Pieces) 1991-Up	1	
64031B	Bushing, 440-T4/4T60E/4T65E Converter Hub 1983-Up	1	8637905
84032	Use 54036A	1	
54036A	Bushing, 440-T4/4T60E/4T65E Converter Reactor (Front) 1983-Up	1	8628915
84045	Bushing, 440-T4/4T60E/4T65E Driven Sprocket Support 1983-Up	1	8656357
84046	Bushing, 440-T4/4T60E/4T65E 2nd Clutch Housing (Rear) 1983-Up	1	8644099
84046B	Bushing, 440-T4/4T60E/4T65E 2nd Clutch Housing (Front) 1983-Up	1	8644098
84046BB	Bushing, 4T60/4T60E/4T65E 2nd Clutch Housing (Front)(Bronze) 1983-Up		
84048	Bushing, 440-T4/4T60E Input Drum (No Grooves) 1983-96	1	8649661
84048A	Bushing, 4T60E/4T65E Input Drum (With Grooves) 1997-Up	1	
84048AB	Bushing, 4T60/4T60E/4T65E Input Drum (W/ID Grooves)(Bronze) 1983-Up	1	
84052	Bushing, 440-T4 Input Sun Gear 1983-84	1	
84053	Bushing, 440-T4 Front Planet 1983-85	1	
84053A	Bushing, 440-T4/4T60E Front Planet 1986-91	1	8658803
84054	Bushing, 440-T4/4T60E Final Drive Internal Gear Shaft 1983-Up	2	8649537
84056	Bushing, 440-T4 Rear Sun Gear (Front)(1-2 Band Drum) 1983-92	1	8644203
84056AA	Bushing, 4T60E/4T65E Rear Sun Gear (Front Bushing)(Reaction Drum)(Also 4T60E Forward Band Drum #559) 1991-95	1	8651447
84056AB	Bushing, 4T60E/4T65E Rear Sun Gear (Rear)(Forward Band Drum) 1991-Up	1	8651448
64060	Bushing, 440-T4 Case & 4T60E/4T65E Extension Housing 1983-Up	1-2	8631119
64060AK	Bushing Kit, 440-T4 Case & 4T60E/4T65E Extension Housing(3 Bushings)(Supertuff Teflon (Coated)(Superior)	1	
84060	Bearing, 4T60E/4T65E Extension Housing (Use 84271)(Some 1996-Up)	1	
84061A	Bushing, 4T60E 2-1 Coast Drum (11/16" Wide)(Center Band Drum)1991-95 (When Out Use 84056AA)	1	5606004
84061B	Bushing, 4T60E/4T65E 2-1 Coast Drum (1 1/4" Wide)(Center Band Drum) 1996-Up	1	

PART #	METAL CLAD SEALS	QTY.	REFERENCE #
84070	Seal, 440-T4/4T60E/4T65E Front 1983-Up	1	8664812
84070G	Seal, 4T65E (Front) Yellow Bore Coat 1997-Up	1	
84072A	Seal, 440-T4/4T60E/4T65E Linkage Shaft 1983-Up	1	8644709

© Whatever It Takes Transmission Parts. Inc.

PART #	METAL CLAD SEALS (Continued)	QTY.	REFERENCE #
T84075	Seal, 440-T4/4T60E Axle Stabilizer 1983-Up (Teckpak)	1	TC-1.375
84076	Seal, 440-T4/4T60E/4T65E Axle (Right Side) (2.155"OD) 1983-Up	1	8666007
84076GV	Seal, 4T65E (Volvo) Axle (Right Side) (2.900"OD) 1999-Up	1	
84077	Seal, 440-T4/4T60E Axle (Left Side) 1983-Up	1	8646637
84077G	Seal, 4T65E Axle (Left Side) 1997-Up	1	24204330
44078A	Seal, 440-T4 Speed-O Shaft (W/Spring) 1983-Up	1	25519078
44078X	Seal, 440-T4 Speed-O Shaft (W/Out Spring) 1983-Up	1	1240382

PART #	FRICTION CLUTCH	QTY.	REFERENCE #
84100	Friction, 440-T4 4th Clutch .090" 1983-88	1	8658209
84100A	Friction, 440-T4/4T60E 4th Clutch .070" (18 Teeth) 1989-Up	2	8685066
84100AA	Friction, 440-T4 4th Clutch .090" (Bent Tooth) 1983-88	1	
84100AAPK	Friction & Steel Kit, 440-T4 4th Clutch .090" (Bent Tooth) 1983-88 (1 Friction & 2 Thin Steels) (Alto)	1	
84100B	Friction, 440-T4/4T60E 4th Clutch .070" (Bent Tooth) 1989-Up	2	
84100BPK	Friction & Steel Kit, 440-T4/4T60E 4th Clutch .070" (Bent Tooth) 1989-Up (2 Frictions & 2 Thin Steels) (Alto)	1	
84100CPK	Friction & Steel Kit, 4T60E 4th Clutch .070" (Bent Tooth) 1993-Up (2 Frictions, 1 Thin Steel, & 2 Thick Steels) (Alto)	1	
84100G	Friction, 4T65E 4th Clutch .070" (32 Teeth) 1997-Up	1-2	24213074
84100H	Friction, 4T65E 4th Clutch (.062") 1 Sided Friction (Internal Teeth) (Volvo) 1999-Up	1-2	
84120H	Friction, 4T65E 4th CLutch (.062") 1 Sided Friction (External Teeth) (Volvo) 1999-Up	1-2	
84104	Friction, 440-T4/4T60E 2nd Clutch (.070") 1983-93 (Use 84104A)	5-6	8662005
84104PK	Friction & Steel Kit, 440-T4/4T60E 2nd Clutch (.070" Fri, .090" Kolene Steels) 1983-Up	1	8662913
84104A	Friction, 4T60E 2nd Clutch (Grooved) (.070") 1994-Up (Retro Fits 1983-Up)	5-6	8685539
84104BHP	Friction, 440-T4/4T60E 2nd Clutch .063" (Hi-Perf) 1983-Up	5-6	
84104C	Friction, 440-T4 2nd Clutch (.060") 1983-93	5-6	
84104CPK	Friction & Steel Kit, 440-T4/4T60E 2nd Clutch .060" (Commercial) 1983-Up (7 Frictions, 6 Thin Steels, & 1 Thick Steel) (Alto)	1	
84104G	Friction, 4T65E 2nd Clutch (Smooth) 1997-Up	5-6	24205361
84104GA	Friction, 4T65E 2nd Clutch (High Energy Eclipse)(.067"Thick) 1997-Up	5-6	
84106	Friction, 440-T4 3rd Clutch .089" 1983-86	4	8662911
84106A	Friction, 440-T4 3rd Clutch .083" (1 Sided Friction, Internal Teeth) 1983-88	4	8658042
84106B	Friction, 440-T4/4T60E/4T65E 3rd Clutch .079" (1 Sided Friction, Internal Teeth) 1989-Up	5	8668361
84106BA	Friction, 440-T4/4T60E/4T65E 3rd Clutch .079" (1 Sided Friction, Internal Teeth) High Energy 1989-Up	5	
84106G	Friction, 4T65E 3rd Clutch (.083")(1 Sided Friction, Internal Teeth) Eclipse, High Energy 2001-Up (Retro Fits To 1983)	5	
84126A	Friction, 440-T4 3rd Clutch .083" (1 Sided Friction, External Teeth) 1985-88	4	8658043
84126B	Friction, 440-T4/4T60E/4T65E 3rd Clutch .079" (1 Sided Friction, Ext. Teeth) 1989-Up	5	8668362
84126G	Friction, 4T65E 3rd Clutch (1 Sided Friction, External Teeth) Eclipse, High Energy 2001-Up (Retro Fits To 1998)	5	
84108	Friction, 440-T4/4T60E Input Clutch (.090") 1983-E94	4	8662850
84108A	Friction, 4T60E/4T65E Input Clutch (.065") (32 Teeth) L1994-02	4	24202333
84108AHP	Fri, 4T60E/TH440T4/4T65E Input Clu (.064"Thk)(32T.) 1995-Up (Raybestos)	4	
84108G	Friction, 4T65E Input Clutch (.064") (30 Teeth) 2003-Up	4	
84108GS1	Friction, 4T65E Input Clutch (.064")(30 Teeth)(Stage 1) 2003-Up	4	
84119	Friction Module, 440-T4 1983-88	1	
84119B	Friction Module, 440-T4 1989-92 (Has 1 84100 Friction, If Customer Needs The 2 0.078" 4th Clutch Friction, Sell 2 Of The 84100A Also)	1	
84119E	Friction Module, 4T60E 1991-94	1	
84119EA	Friction Module, 4T60E 1995-Up	1	
84119EAS1	Friction Module, 4T60E (Stage 1) 1995-Up	1	
84119G	Friction Module, 4T65E 1997-02	1	
84119GA	Friction Module, 4T65E 2003-Up	1	
84119GAS1	Friction Module, 4T65E (Stage 1) 2003-Up	1	
84119H	Friction Module, 4T65E (Volvo) 1999-02	1	
84119HA	Friction Module, 4T65E (Volvo) 2003-Up	1	

PART #	STEEL CLUTCH	QTY.	REFERENCE #
84120	Steel, 440-T4/4T60E 4th Clutch .080" 1983-86	2	8650767
84120B	Steel, 440-T4/4T60E 4th Clutch .074" 1987-Up	2	8661006
84120G	Steel, 4T65E 4th Clutch (.083") 1997-Up	2	24208013
84120GA	Steel, 4T65E 4th Clutch (.085") 2004-Up	2	
84120H	Friction, 4T65E 4th CLutch (.062") 1 Sided Friction (External Teeth) (Volvo) 1999-Up	1-2	
84124	Steel, 440-T4 2nd Clutch .090" 1983-86	5	8656642

© Whatever It Takes Transmission Parts. Inc.

84124A	Steel, 440-T4/4T60E 2nd Clutch .077” 1987-Up	6	8662006
84124C	Steel, 440-T4 2nd Clutch .090” (Kolene) 1983-86	6	8662309
84124D	Steel, 440-T4/4T60E 2nd Clutch .077” (Kolene) 1987-Up	6	24203372
84124G	Steel, 4T65E 2nd Clutch .068” (36 Teeth) 1997-Up	6	24204104
84124GA	Steel, 4T65E 2nd Clutch .089” (36 Teeth) 1997-Up	6	
84125	Steel, 440-T4/4T60E 2nd Clutch .044” (34 Teeth)(Waved) 1985-Up	1	8658463
84125G	Steel, 4T65E 2nd Clutch .065” (36 Teeth)(Waved) 1997-Up	1	24202950
84126	Steel, 440-T4 3rd Clutch .090” 1983-86	4	8656313
84126A	Friction, 440-T4/4T60E 3rd Clutch .083” (1 Sided, External Teeth) 1985-88	4	8658043
84126B	Friction, 440-T4/4T60E/4T65E 3rd Clutch .079” (1 Sided Friction, External Teeth) 1989-Up (When Out Use 84126G)	5	8668362
84126G	Friction, 440-T4/4T60E/4T65E 3rd Clutch (.079”)(1 Sided Friction, External Teeth) Eclipse, High Energy 1989-Up	5	
84127	Steel, 440-T4/4T60E 3rd Clutch (.030”)(6 Teeth)(Waved) 1983-Up (Used With 1 Sided Frictions)	1	8656312
84127A	Steel, 440-T4/4T60E 3rd Clutch (.048”)(6 Teeth)(Waved) 1987-Up	1	8656645
84127AA	Steel, 440-T4/4T60E 3rd Clutch (.048”)(6 Teeth)(Waved) (Kolene) 1987-Up	1	
84127G	Steel, 4T65E 3rd Clutch (.040”)(6 Teeth)(Waved) 1997-Up	1	
64128	Steel, 440-T4 Input Clutch (.076”) (Flat) 1983-92 (Also Fits 4T60E/4T65E Input Clutch L94-Up)	3-4	8631379
84128	Steel, 440-T4/4T60E Input Clutch (.050”)(Flat) L1990-E94	4	8651446
84128B	Steel, 4T60E/4T65E Input Clutch (.077”)(Flat) L1994-Up (Use 64128)	4	
64129	Steel, 440-T4/4T60E/4T65E Input Clutch (.050”) (Waved) L1990-Up	1	8675257
84129A	Steel, 4T60E/4T65E Input Clutch (.041”) (Waved) 1997-Up	1	
84139	Steel Module, 440-T4 1983-86	1	
84139C	Steel Module, 440-T4 1987-E91	1	
84139E	Steel Module, 4T60E 1991-E94	1	
84139EA	Steel Module, 4T60E L1994-Up	1	
84139G	Steel Module, 4T65E 1997-Up	1	

PART #	CLUTCH PRESSURE PLATES	QTY.	REFERENCE #
84140	Pressure Plate, 440-T4 4th Clutch .200” 1983-86	1	8649831
84140A	Pressure Plate, 440-T4/4T60E 4th Clutch .160” 1987-92	1	8661004
84140B	Pressure Plate, 4T60E 4th Clutch .135” 1993-Up	2-3	8680771
84140G	Pressure Plate, 4T65E 4th Clutch .128” 1997-Up	1	24208014
84144A	Pressure Plate, 440-T4 2nd Clutch (Flat) 1983-85	1	
84144C	Pressure Plate, 440-T4 2nd Clutch (Beveled W/Internal Snap Ring) 1986-89	1	8662010
84144D	Pressure Plate, 440-T4/4T60E 2nd Clutch .390” (Beveled) 1989-Up	1	8668566
84144G	Pressure Plate, 4T65E 2nd Clutch .220” (Beveled) 1997-Up	1	
84145A	Apply Plate, 440-T4/4T60E 2nd Clutch 5 1/2”OD (Flat)(Bottom) 1991-Up	1	8680367
84145G	Apply Plate, 4T65E 2nd Clutch 5 5/8”OD (Flat)(Bottom) 1997-Up	1	34204103
84146	Pressure Plate, 440-T4 3rd Clutch 1983-86	1	8656315
84146A	Pressure Plate, 440-T4/4T60E/4T65E 3rd Clutch .150” 1987-Up	1	8658082
84148	Pressure Plate, 440-T4/4T60E/4T65E Input Clutch .190” (Top) 1983-Up	1	8658146
84149	Apply Plate, 440-T4/4T60E/4T65E Input Clutch .190” (Bottom) 1983-Up	1	8682801
84151	Spacer, 440-T4 Shell Spacer 1983-Up	1	8656362

PART #	MODULATORS	QTY.	REFERENCE #
84160	Modulator, 440-T4 Non-Adjustable (Single) 1983-Up	1	8662910
84160B	Modulator, 440-T4/4T60E Black/Red Stripe (Single)(Diesel) 1983-Up	1	8649099
84160G	Modulator, 440-T4 Green Stripe (Single) 1983-Up	1	
84160K	Modulator Kit, 440-T4/4T60E (Contains Large Can Modulator) 1983-Up	1	8646956
84160R	Modulator, 440-T4/4T60E Red Stripe (Dual)(Universal) 1983-Up	1	8646967
T84161	Adapter Kit, 440-T4 (Makes All 350/400 Modulator fit a 440-T4) 1983-Up (Teckpak)	1	K-84823
84163	Valve, 440-T4 Under Modulator (Long, 1st Design) 1983-E86	1	8656074
84163A	Valve, 440-T4 Under Modulator (Long, 1st Design) L1986-Up	1	8658375

PART #	VALVE BODY KITS	QTY.	REFERENCE #
S84165	Valve Body Kit, 440-T4 1983-Up (Superior)	1	K440-T4
T84165-3	Valve Body Kit, 440-T4 Tri-Pack 1983-Up (Transgo)	1	SK-440-3
T84165A	Valve Body Kit, 440-T4 (Reverse Cushion Kit) 1983-Up (Transgo)	1	440 RK
T84165LE	Lube Kit, 440-T4 Lube & End Play Kit 1983-Up (Transgo)	1	440 LK
S84165G	Valve Body Kit, 4T65E Shift Correction 1997-Up (Superior)	1	
T84165G	Valve Body Kit, 4T65E 1997-Up (Transgo)	1	
T84167	Valve Body Kit, 440-T4 Junior 1983-Up (Transgo)	1	SK-440-Jr
T84167E	Valve Body Kit, 4T60E Junior 1991-Up (Transgo)	1	SK-4T60E-Jr

PART #	OIL SEALING RINGS	QTY.	REFERENCE #
84175	Ring Kit, 440-T4 W/Out Vespel Rings 1983-Up	1	
84175A	Ring Kit, 440-T4/4T60E/4T65E W/Vespel Rings 1983-E98	1	

© Whatever It Takes Transmission Parts. Inc.

PART #	OIL SEALING RINGS (Continued)	QTY.	REFERENCE #
84175G	Ring Kit, 4T65E L1998-Up	1	
84176	Ring, 440-T4/4T60E/4T65E Pump Slide .080” (Metal) 1983-Up	1	8644922
84176A	Ring, 440-T4/4T60E/4T65E Pump Slide .077” (Metal) 1983-Up	1	
84176B	Ring, 440-T4/4T60E/4T65E Pump Slide .074” (Metal) 1983-Up	1	
84176C	Ring, 440-T4/4T60E/4T65E Pump Slide .072” (Metal) 1983-Up	1	
84176D	Ring, 440-T4/4T60E/4T65E Pump Slide .069” (Metal) 1983-Up	1	
84177T	Ring, 440-T4/4T60E/4T65E Input Shaft (Teflon) 1983-Up	3	8656342
64178AT	Ring, 440-T4/4T60E/4T65E Turbine Shaft (Front)(Solid)(Teflon) 1983-Up	1	8637170
64178BT	Ring, 440-T4/4T60E/4T65E Turbine Shaft (Rear)(Solid)(Teflon) 1983-Up	2	8643058
84179	Ring, 440-T4 2nd Clutch (Metal) 1983-86	2	8658098
84179ET	Ring, 440-T4/4T60E/4T65E 2nd Clutch (Rubber Expander) 1987-E98	2	8662329
84179KT	Ring Kit, 440-T4/4T60E/4T65E 2nd Clutch (Contains; 2 84179ET & 2 84179T) 1987-E98	1	
84179T	Ring, 440-T4/4T60E/4T65E 2nd Clutch .125” (Vespel)(Teflon) 1987-E98	2	8662330
84179GT	Ring, 4T65E 2nd Clutch .100” (Vespel)(Teflon)(Does Not Use Rubber Expanders)L98-Up	2	24209498
54189AT	Ring, 440-T4/4T60E Governor Shaft (Teflon) 1983-Up	1	8632588
84192T	Ring, 440-T4/4T60E Input Clutch Accumulator (Teflon) 1983-Up	1	8644398
84195T	Ring, 440-T4/4T60E 1-2 Reverse Servo (Teflon) 1983-Up (For Rubber Use 84363A)	1	8658160
84538	Ring, 440-T4/4T60E/4T65E Pump Vane 1983-Up	2	8644333

PART #	WASHERS & BEARINGS	QTY.	REFERENCE #
84200	Washer Kit, 440-T4/4T60E (6 Washers, No Selectives) 1983-Up	1	
84200G	Washer Kit, 4T65E (5 Washers, No Selectives) 1997-00	1	
84200GA	Washer Kit, 4T65E (6 Washers, No Selectives) 2001-Up	1	
84201A	Bearing Kit, 440-T4/4T60E 1983-Up (Contains: #217, 229, 232A, 238, 247, 251, 254, 257, 265A, & 292) (This Kit May Not Fit All 1996-Up 4T60E)	1	
84201G	Bearing Kit, 4T65E 1997-Up	1	
84204A	Repair Kit, 440-T4/4T60E/4T65E Final Drive Planet (16 Steel Washers) 1983-Up	1	8665958
64204D	Repair Kit, 440-T4/4T60E Final Drive Planet (8 Steel & 8 Brass Washers) 1983-90	1	K75906A
84209	Bearing, 440-T4/4T60E Pump Shaft 1983-Up	1	8644516
84209G	Sleeve, 4T65E Pump Shaft (Presses Into The Valve Body) 1997-Up	1	
84217	Bearing, 440-T4/4T60E 4th Clutch Hub to Channel Plate 1983-Up	1	8656393
84217G	Washer, 4T65E 4th Clutch Hub to Channel Plate (3 Tab) 1997-Up	1	24207063
84220A	Bearing, 440-T4/4T60E 4th Clutch Hub 1983-96	1	
84220G	Bearing, 4T65E 4th Clutch Hub (Split, Fits on O.P. Shaft) 1997-Up (Use 84241A)	1	
84226	Washer, 440-T4/4T60E Driven Sprocket Support to 2nd Clutch Drum 1983-Up	1	8644069
84226G	Washer, 4T65E Driven Sprocket Support to 2nd Clutch Drum (2 Tab) 1997-Up	1	24204434
84229	Bearing, 440-T4/4T60E 2nd Clutch Drum to Input Drum 3 1/16”OD (Can Use 84229G)	1	8649704
84229G	Bearing, 4T65E 2nd Clutch Drum to Input Drum 3”OD (Can Use 84229) 1997-Up	1	
S84229SAK	Shim Kit, 440-T4/4T60E Input .020” (10 Per Kit) 1983-Up (Sonnax)	1	84733-20
S84229SK	Shim Kit, 440-T4/4T60E Input .010” (10 Per Kit) 1983-Up (Sonnax)	1	84733-10
84230	Washer, 440-T4/4T60E 2nd Clutch 3.033”OD (2.90MM-3.00MM) 1983-Up	1	8658163
84230A	Washer, 440-T4/4T60E 2nd Clutch 3.033”OD (3.05MM-3.15MM) 1983-Up	1	8658164
84230B	Washer, 440-T4/4T60E 2nd Clutch 3.033”OD (3.20MM-3.30MM) 1983-Up	1	8658165
84230C	Washer, 440-T4/4T60E 2nd Clutch 3.033”OD (3.35MM-3.45MM) 1983-Up	1	8658166
84230D	Washer, 440-T4/4T60E 2nd Clutch 3.033”OD (3.50MM-3.60MM) 1983-Up	1	8658167
84230E	Washer, 440-T4/4T60E 2nd Clutch 3.033”OD (3.65MM-3.75MM) 1983-Up	1	8658168
84230EA	Washer, 440-T4/4T60E 2nd Clutch 3.033”OD (3.80MM-3.90MM) 1983-Up	1	8658169
84230G	Washer, 440-T4/4T60E 2nd Clutch 3.033”OD (3.95MM-4.05MM) 1983-Up	1	8658170
84230H	Washer, 440-T4/4T60E 2nd Clutch 3.033”OD (4.10MM-4.20MM) 1983-Up	1	8658171
84230HA	Washer, 440-T4/4T60E 2nd Clutch 3.033”OD (4.25MM-4.35MM) 1983-Up	1	8658172
84230J	Washer, 440-T4/4T60E 2nd Clutch 3.033”OD (4.40MM-4.50MM) 1983-Up	1	8658173
84230JA	Washer, 440-T4/4T60E 2nd Clutch 3.033”OD (4.55MM-4.65MM) 1983-Up	1	8658174
84230L	Washer, 440-T4/4T60E 2nd Clutch 3.033”OD (4.70MM-4.80MM) 1983-Up	1	8658175
84230M	Washer, 440-T4/4T60E 2nd Clutch 3.033”OD (4.85MM-4.95MM) 1983-Up	1	8658176
84230N	Washer, 440-T4/4T60E 2nd Clutch 3.033”OD (5.00MM-5.10MM) 1983-Up	1	8658177
84230P	Washer, 4T65E 2nd Clutch 2.971”OD (2.90MM-3.00MM) 1997-Up	1	
84230PA	Washer, 4T65E 2nd Clutch 2.971”OD (3.05MM-3.15MM) 1997-Up	1	
84230PB	Washer, 4T65E 2nd Clutch 2.971”OD (3.20MM-3.30MM) 1997-Up	1	
84230PC	Washer, 4T65E 2nd Clutch 2.971”OD (3.35MM-3.45MM) 1997-Up	1	
84230PD	Washer, 4T65E 2nd Clutch 2.971”OD (3.50MM-3.60MM) 1997-Up	1	
84230PE	Washer, 4T65E 2nd Clutch 2.971”OD (3.65MM-3.75MM) 1997-Up	1	
84230PEA	Washer, 4T65E 2nd Clutch 2.971”OD (3.80MM-3.90MM) 1997-Up	1	
84230PG	Washer, 4T65E 2nd Clutch 2.971”OD (3.95MM-4.05MM) 1997-Up	1	
84230PH	Washer, 4T65E 2nd Clutch 2.971”OD (4.10MM-4.20MM) 1997-Up	1	
84230PHA	Washer, 4T65E 2nd Clutch 2.971”OD (4.25MM-4.35MM) 1997-Up	1	
84230PJ	Washer, 4T65E 2nd Clutch 2.971”OD (4.40MM-4.50MM) 1997-Up	1	
84230PJA	Washer, 4T65E 2nd Clutch 2.971”OD (4.55MM-4.65MM) 1997-Up	1	
84230PL	Washer, 4T65E 2nd Clutch 2.971”OD (4.70MM-4.80MM) 1997-Up	1	

© Whatever It Takes Transmission Parts. Inc.

84230PM	Washer, 4T65E 2nd Clutch 2.971”OD (4.85MM-4.95MM) 1997-Up	1	
84230PN	Washer, 4T65E 2nd Clutch 2.971”OD (5.00MM-5.10MM) 1997-Up	1	
84232	Washer, 440-T4 Input Drum (Rear)(4 Tab) 1983-88	1	8662370
84232A	Bearing, 440-T4/4T60E/4T65E Input Drum (Rear) 1989-Up	1	8668422
84233A	Sleeve, 440-T4/4T60E Input Drum (Rear)(4 Notches) 1983-E93	1	8656367
84233C	Needle Bearing, 4T60E Input Drum (Pressed Inside) L1993-Up	1	24203905
84237	Bearing, 440-T4/4T60E Inside Front Planet 1983-Up	1	
84238	Bearing, 440-T4/4T60E/4T65E Front Planet to Rear Planet 1983-Up	1	8646504
84241	Bearing, 440-T4 Sun Gear (Split, Inner)(1 3/4” long) 1983-90	1	8649505
84241A	Bearing, 440-T4/4T60E Sun Gear (Split, Inner)(3/4” long) 1991-6/93 (Also Fits Inside of The 4th Clutch Hub on Some 1996-Up)	1	8675032
84247	Bearing, 440-T4/4T60E/4T65E Differential to Sun Gear 2.191”OD 1983-Up	1	8646354
54247A	Bearing, 440-T4/4T60E/4T65E Differential to Sun Gear 2.000”OD 1983-Up	1	8628962
84247A	Bearing, 440-T4/4T60E/4T65E Differential to Sun Gear 2.125”OD 1983-Up	1	8646254
84247B	Bearing, 4T60E/4T65E Differential to Sun Gear 2.250”OD 1996-Up	1	
84251	Bearing, 440-T4/4T60E/4T65E Rear Planet to Sun Gear Drum 1983-Up	1	8649353
84254	Bearing, 440-T4/4T60E Park Gear to Ring Gear (2.600”OD) 1983-Up	1	8644240
84254G	Bearing, 4T65E Park Gear to Ring Gear (.155” Thick)(2.745”OD) 1997-Up	1	
84254GA	Bearing, 4T65E Park Gear To Ring Gear (.220” Thick)(2.830”OD) 1997-Up	1	
84255G	Shim, 4T65E (AWD) Park Gear To Final Drive Sun Gear (1.57mm)(With Inner Splines) 1997-Up	1	
84255GA	Shim, 4T65E (AWD) Park Gear To Final Drive Sun Gear (1.68mm)(W/5 Inner Tabs) 1997-Up	1	
84255GB	Shim, 4T65E (AWD) Park Gear To Final Drive Sun Gear (1.79mm)(W/5 Inner Tabs) 1997-Up	1	
84255GC	Shim, 4T65E (AWD) Park Gear To Final Drive Sun Gear (1.90mm)(W/5 Inner Tabs) 1997-Up	1	
84255GD	Shim, 4T65E (AWD) Park Gear To Final Drive Sun Gear (2.01mm)(W/5 Inner Tabs) 1997-Up	1	
84255GE	Shim, 4T65E (AWD) Park Gear To Final Drive Sun Gear (2.12mm)(W/5 Inner Tabs) 1997-Up	1	
84255GF	Shim, 4T65E (AWD) Park Gear To Final Drive Sun Gear (2.23mm)(W/5 Inner Tabs) 1997-Up	1	
84255GH	Shim, 4T65E (AWD) Park Gear To Final Drive Sun Gear (2.34mm)(W/5 Inner Tabs) 1997-Up	1	
84255GI	Shim, 4T65E (AWD) Park Gear To Final Drive Sun Gear (2.45mm)(W/5 Inner Tabs) 1997-Up	1	
84255GJ	Shim, 4T65E (AWD) Park Gear To Final Drive Sun Gear (2.56mm)(W/5 Inner Tabs) 1997-Up	1	
84255GL	Shim, 4T65E (AWD) Park Gear To Final Drive Sun Gear (2.67mm)(W/5 Inner Tabs) 1997-Up	1	
84257	Bearing, 440-T4/4T60E Reaction Drum to Internal Ring Gear 1983-94 (Also Fits Some 4T65E 1997-Up)	1	8644206
84257B	Race, 4T60E/4T65E Reaction Drum to Internal Ring Gear (.140” Thick) 1995-Up (Also Fits Some 4T65E 1997-Up)	1	
64265A	Bearing, 440-T4 Governor To Cover 1980-Up	1	24200584
84271	Caged Needle Bearing, 4T60E/4T65E Extension Housing (1.855”OD)(.470” Wide) 1996-Up (Cast # USA HK4012)	1	
84271A	Caged Needle Bearing, 4T60E/4T65E Extension Housing (2 1/2”ID)(Turbo) 1996-Up	1	
T64275	Axle Stabilizer, 440-T4/4T60E Passenger Side (W/Bearing & Seal) 1983-Up (Teckpak)	1	
T84275	Axle Stabilizer, 440-T4/4T60E Driver Side (W/Bearing & Seal) 1983-Up (Teckpak)	1	
T84275A	Axle Stabilizer, 4T60E/4T65E (Right Side Only)(Teckpak)	1	
T84275B	Axle Stabilizer, 4T60E/4T65E (Left Side Only)(Teckpak)	1	
84275G	Caged Needle Bearing, 4T60E/4T65E Channel Plate To Axle 1996-Up (1.630”OD)(.430”Wide) (Cast # Torrington DC-66433)	1	
84278	Washer, 440-T4/4T60E Drive Sprocket to Channel Plate .068” (3 tab) 1983-Up	1	8649260
84278G	Washer, 4T65E Drive Sprocket to Channel Plate .048” (3 tab) 1997-Up	1	24204328
64279A	Washer, 440-T4/4T60E Drive Sprocket to Support (4 Tab) 1983-Up	1	8652841
84279G	Washer, 4T65E Drive Sprocket to Support (3 Tab) 1997-Up	1	24205121
84279GA	Washer, 4T65E Drive Sprocket To Support (3 Tab) 2001-Up (The 3 Tabs Are Round And Split To Lock On The Sprocket)	1	
84280	Washer, 440-T4/4T60E 4th Clutch Hub to Driven Support (2.835”OD) 1983-Up	1	8644664
84280G	Washer, 4T65E 4th Clutch Hub to Driven Support (2.465”OD) 1997-Up	1	24204839
84281	Washer, 440-T4/4T60E Driven Sprocket to Support (4 Tab) 1983-Up	1	8644684
84281G	Washer, 4T65E Driven Sprocket to Support (3 Tab) 1997-Up	1	24204840
84285	Wear Plate, 440-T4/4T60E Input Sprag 1983-Up	2	8644016
84286B	Bearing, 4T60E 1-2 Inner Race to Forward Band Drum (2.338”ID, 3.220”OD) 1991-Up	1	8648389
84286C	Bearing, 4T65E 1-2 Inner Race to Forward Band Drum (2.296”ID, 3.475”OD) 1997-Up	1	
64292	Bearing, 440-T4/4T60E/4T65E Differential to Case (1.443”ID, 2.250”OD) 1983-Up	1	8631362
84292A	Bearing, 4T60E/4T65E Differential To Case (1.918”ID, 2.590”OD)	1	
84292H	Bearing W/Races, 4T65E (Volvo) Differential To Case (2.845”ID)(3.573”OD) 1999-Up	1	
64293	Spacer, 440-T4/4T60E/4T65E Differential to Case 1.45MM 1983-Up	1	8631420
S64293-10	Shim Set, 440-T4/4T60E/4T65E Differential To Case (10 Per Set) 1983-Up (Sonnax)	1	
64293A	Spacer, 440-T4/4T60E/4T65E Differential to Case 1.55MM 1983-Up	1	8631421
64293B	Spacer, 440-T4/4T60E/4T65E Differential to Case 1.65MM 1983-Up	1	8631422
64293C	Spacer, 440-T4/4T60E/4T65E Differential to Case 1.75MM 1983-Up	1	8631423
64293D	Spacer, 440-T4/4T60E/4T65E Differential to Case 1.85MM 1983-Up	1	8631424
64293E	Spacer, 440-T4/4T60E/4T65E Differential to Case 1.95MM 1983-Up	1	8631425
64293F	Spacer, 440-T4/4T60E/4T65E Differential to Case 2.05MM 1983-Up	1	8631426
64293G	Spacer, 440-T4/4T60E/4T65E Differential to Case 2.15MM 1983-Up	1	8631427
64293H	Spacer, 440-T4/4T60E/4T65E Differential to Case 2.25MM 1983-Up	1	8631428

© Whatever It Takes Transmission Parts. Inc.

PART #	WASHERS & BEARINGS (Continue)	QTY.	REFERENCE #
64293J	Spacer, 440-T4/4T60E/4T65E Differential to Case 2.35MM 1983-Up	1	8631429
64295	Needle Bearing, 440-T4/4T60E/4T65E Converter Reactor 1983-Up	1	24214158
84298	Needle Bearing, 440-T4/4T60E/4T65E Driven Sprocket Support 1983-Up	1	8644054
BS6015	Qwik Shim, 440-T4/4T60E Rear Planet Bottom Replacement Shim .015” 1983-Up	1	
BS6030	Qwik Shim, 440-T4/4T60E Rear Planet Bottom Replacement Shim .030” 1983-Up	1	
TS6015	Qwik Shim, 440-T4/4T60E Rear Planet Top Replacement Shim .015” 1983-Up	1	
TS6030	Qwik Shim, 440-T4/4T60E Rear Planet Top Replacement Shim .030” 1983-Up	1	
TS7015	Qwik Shim, 440-T4/4T60E Final Drive Planet Replacement Shim .015” 1983-Up	1	
TS7030	Qwik Shim, 440-T4/4T60E Final Drive Planet Replacement Shim .030” 1983-Up	1	

PART #	GASKETS & RUBBER COMPONENTS	QTY.	REFERENCE #
84300	Gasket, 440-T4 Bottom Pan 1983-Up	1	8656396
84300E	Gasket, 4T60E Bottom Pan 1991-Up	1	8676250
84300EW	Gasket, 4T60E/4T65E Bottom Pan (Bonded) (For Bolts With 13mm Heads) 1991-Up	1	
84300EAW	Gasket, 4T60E/4T65E Bottom Pan (Bonded) (For Bolts With 10mm Heads) 1997-Up	1	
84301	Gasket, 440-T4/4T60E Side Pan (Outer) 1983-93	1	8656397
84301EW	Gasket, 4T60E Side Pan (Outer)(Bonded) 1994-Up	1	8683803
84301GW	Gasket, 4T65E Side Pan (Outer)(Bonded) 1997-Up	1	24206959
84301J	Gasket, 440-T4/4T60E Side Pan (Inner) 1983-93	1	8656398
84301JA	Lathe Cut Seal, 4T60E Side Pan (Inner) 1994-Up	1	24200061
84301JG	Lathe Cut Seal, 4T65E Side Pan (Inner) (4 11/16”OD) 1997-Up	1	
84306	Gasket, 440-T4 Governor Control Body 1983-Up	1	8656385
84308	Gasket, 440-T4 Accumulator Cover 1983-Up	2	8656073
84308A	Gasket, 4T60E Accumulator Cover 1991-93	2	8651536
84308B	Gasket, 4T60E Accumulator Cover W/Spacer Plate 1991-Up	1	8682085
84308G	Gasket, 4T65E Accumulator Cover W/Spacer Plate 1997-Up	1	
84313	O-Ring, 440-T4/4T60E/4T65E Pump Slide 1983-Up	1	8656760
54314B	Seal, 440-T4/4T60E/4T65E Pump Slide (Rubber) 1983-Up	1	8631283
54315B	Seal, 440-T4/4T60E/4T65E Pump Slide (Teflon) 1983-Up	1	8631877
84320	Gasket, 440-T4 Valve Body (Both Sides) 1983-84	2	8646907
84320A	Gasket, 440-T4 Valve Body Spacer Plate to Channel Plate E1985 (Ink # 713)(GCP)	1	8656713
84320AA	Gasket, 440-T4 Valve Body Spacer Plate to Channel Plate L1985-93 (Ink # 813)(GCA)	1	8656813
84320B	Gasket, 4T60E Valve Body Spacer Plate to Channel Plate 1991-92 (Ink # 8678761)(GCP)	1	8678761
84320BA	Gasket, 4T60E Valve Body Spacer Plate to Channel Plate 1993-Up (Ink # 8682220)	1	8682280
84320G	Gasket, 4T65E Valve Body Spacer Plate to Channel Plate 1997-Up (C CVT AVT)	1	
84320GV	Gasket, 4T65E (Volvo) Valve Body Plate To Channel Plate 1999-Up (C CVT AVT)	1	
84320L	Gasket, 440-T4 Valve Body Spacer Plate to Channel Plate (Allante) 1989-92 (Ink # 401)	1	
84321	Gasket, 440-T4 Valve Body to Spacer Plate 1983-84 (Use 84320)	1	
84321A	Gasket, 440-T4 Valve Body to Spacer Plate E1985 (Ink # 712) (GVB)	1	8656712
84321AA	Gasket, 440-T4 Valve Body to Spacer Plate L1985-93 (Ink # 848)	1	8662840
84321B	Gasket, 4T60E Valve Body to Spacer Plate 1991-92 (Ink # 8678762)	1	8678762
84321BA	Gasket, 4T60E Valve Body to Spacer Plate 1993-99 (Ink # 8683281)	1	8682281
84321G	Gasket, 4T65E Valve Body to Spacer Plate 1997-Up	1	
84321GV	Gasket, 4T65E (Volvo) Valve Body To Spacer Plate 1999-Up	1	
84321L	Gasket, 440-T4 Valve Body to Spacer Plate (Allante) 1989-Up	1	
84322	Gasket, 440-T4 Manuever Pipe to Valve Body (1st Design) 1983-E85	1	8656083
84322A	Gasket, 440-T4 Manuever Pipe to Valve Body (2nd Design) L1985-Up	1	8662841
84325	Gasket, 440-T4 Lower Channel Plate 1983-93	1	8649830
84325A	Gasket, 4T60E Lower Channel Plate 1991-Up	1	8651615
84325AG	Gasket, 4T65E Lower Channel Plate 1997-Up	1	
84325AGW	Gasket, 4T65E Lower Channel Plate (Rubber Coated Metal) 1997-Up	1	
84325B	Gasket, 440-T4 Upper Channel Plate 1983-E85	1	8649196
84325E	Gasket, 440-T4/4T60E Upper Channel Plate (One Piece Design) L1985-Up	1	8668064
84325G	Gasket, 4T65E Upper Channel Plate & Modulator 1997-Up (4th Design) Retro Fits All 4T65E	1	
84325GW	Gasket, 4T65E Upper Channel Plate & Modulator (Rubber Coated Metal) 1997-Up	1	
84327	Gasket, 440-T4 Modulator Port 1983-93	1	8656022
84330	Lip Seal, 440-T4/4T60E/4T65E 4th Clutch Piston (Inner) 1983-Up	1	8644066
84330L	Lip Seal, 440-T4/4T60E 4th Clutch Piston (Inner)(Allante) 1989-Up	1	
84331	Lip Seal, 440-T4/4T60E/4T65E 4th Clutch Piston (Outer) 1983-Up	1	8644061
84331L	Lip Seal, 440-T4/4T60E 4th Clutch Piston (Outer)(Allante) 1989-Up	1	
84332V	Lip Seal, 440-T4 2nd Clutch Piston (Inner) 1983-Up	1	8668074
84333	Lip Seal, 440-T4 2nd Clutch Piston (Outer) 1983-Up	1	8656742
84334	Lip Seal, 440-T4/4T60E/4T65E Input Clutch Piston (Inner) 1983-Up	1	8649836
84335	Lip Seal, 440-T4/4T60E/4T65E Input Clutch Piston (Outer) 1983-Up	1	8649837
84336	Lip Seal, 440-T4/4T60E/4T65E 3rd Clutch Piston (Inner) 4/1983-Up	1	8675318
S84336HP	Lip Seal, 440-T4/4T60E/4T65E 3rd Clu Piston (Can Only Be Used With Units That Had Previously Had S84965GK Installed) (Sonnax)	1	

© Whatever It Takes Transmission Parts. Inc.

84336A	Lip Seal, 440-T4 3rd Clutch Piston (Inner) 1/1983-3/1983	1	8644146
84336B	Use 86353	1	
84337	Lip Seal, 440-T4/4T60E 3rd Clutch Piston (Outer) 1983-Up	1	8644156
84345	Lathe Cut Seal, 440-T4 Governor Cover 1983-93	1	8660545
84348	Lathe Cut Seal, 4T60E Extension Housing 1991-Up	1	8651419
84348G	Lathe Cut Seal, 4T65E Extension Housing 1997-Up	1	
84350	Lathe Cut Seal, 440-T4/4T60E/4T65E Converter Clutch Accumulator Piston 1983-Up	1	8658086
84351	Lathe Cut Seal, 440-T4 Input Clutch Accumulator Piston 1983-93	1	
54352A	Lathe Cut Seal, 440-T4/4T60E 1-2 & 3-4 Accumulator Piston 1983-Up	2	8635568
84352G	Lathe Cut Seal, 4T65E 1-2 & 3-4 Accumulator Piston 1997-Up	2	
86353	O-Ring, 440-T4/4T60E/4T65E 3rd Clutch Piston Housing (Inner) (This O-Ring Is In The Input Drum But Seals Against # 985)	1	
84354A	Use 44369A	1	8651467
44369A	O-Ring, 4T60E/4T65E 3-4 Accumulator #354 (2.00"OD)(Purple)	1	
84362A	Lathe Cut Seal, 4T60E 2-1 Servo Cover Feed to Case (.066" Thick) 1991-96	1	8651648
84362G	Lathe Cut Seal, 4T60E/4T65E 2-1 Servo Cover Feed To Case (.118" Thick) 1997-Up	1	8651541
84363A	Lip Seal, 440-T4/4T60E/4T65E Reverse Servo Piston (Short Lip) 1983-Up (Also Fits Forward Servo Piston)	1	8658162
84363B	Lip Seal, 440-T4/4T60E/4T65E Reverse Servo Piston (Long Tip) 1983-Up 1983-Up	1	
84364	O-Ring, 440-T4 1-2 & Reverse Servo Cover 1983-91 (Also Fits 4T60E Reverse Servo Cover 1991-Up)	2	8658111
84364B	O-Ring, 4T60E 1-2 Servo Cover To Case 1991-Up	1	8651567
84364C	O-Ring, 4T65E Reverse Band Servo Cover 1997-04	1	
84364G	Lathe Cut Seal, 4T65E Forward Servo Cover 1997-Up	1	
84365A	Lathe Cut Seal, 4T60E/4T65E 2-1 Servo Piston 1991-Up	1	8651549
84365G	Lip Seal, 4T65E 2-1 Servo Piston 1997-Up	1	
84366A	O-Ring, 4T60E/4T65E 2-1 Servo Piston Housing 1991-Up	1	8651541
103368	O-Ring, 440-T4/4T60E Case Connector 1983-Up (Also Fits 440-T4 Modulator)	1-2	
64369	O-Ring, 440-T4 Speed-O Driven Gear Sleeve 1983-Up	1	
84369	O-Ring, 440-T4 Modulator 1983-Up (Use 106368)	1	
84370	O-Ring, 4T60E/4T65E Speed Sensor 1991-Up	1	
44371B	Boot, 440-T4/4T60E/4T65E Filler Tube 1983-Up	1	1259475
84371H	Boot, 4T65E (Volvo) Filler Tube 1999-Up	1	
84372	O-Ring, 440-T4 Actuator Guide 1983-Up	1	
84372A	O-Ring, 4T60E/4T65E Actuator Guide 1997-Up	1	
54373B	Boot, 440-T4 Detent Cable 1983-Up	1	
84376	O-Ring, 440-T4/4T60E Converter Clutch Solenoid Screen 1983-Up	1	8658109
84379	Seal, 440-T4/4T60E/4T65E Filter Seal 1983-Up	1	8656613
64380	O-Ring, 440-T4/4T60E/4T65E Turbine Shaft (Goes Behind Splines) 1983-Up	1	8662686
84383	Cup Seal, 440-T4 Servo Pipe to Valve Body 1983-93	2	8656567
83383A	Cup Seal, 440-T4 Servo Pipe to Case 1983-93	2	8656568
84383B	Lathe Cut Seal, 440-T4 Lube Pipe Seal 1983-93	1	8649379
84383C	Cup Seal, 440-T4 3-2 Coast Down (Up-Date) 1983-93	1	8662391
22384	O-Ring, 440-T4 Lock-Up Solenoid 1983-Up	1	

PART #	TECHNICAL MANUALS	QTY.	REFERENCE #
84400	Tech Manual, 440-T4 1983-Up	1	83-440TTM
84400E	Tech Manual, 4T60E 1991-Up	1	83-4T60ETM
84400G	Tech Manual, 4T65E 1997-Up	1	4T65E
84400GA	Tech Manual, 4T65E (Update Hand Book) (ATSG)	1	
84400H	Tech Manual, 440-T4 (Hand Book) 1986-Up	1	83-440TTM-U1
84400J	Tech Manual, 440-T4 Update (Volume II) 1990	1	83-440TTM-U2
84401	Tech Manual On CD, 440-T4 (4T60) 1983-93	1	
84401GA	Tech Manual On CD, 4T65E Update Handbook (ATSG)	1	
84407E	Video W/Manual, 4T60E	1	

PART #	ELECTRICAL COMPONENTS	QTY.	REFERENCE #
84410B	Switch, 4T60E Neutral Safety (W/Wire Harness, W/1 Four, & 1 Seven Prong Connector) 1991-96	1	1994350
84410BA	Switch, 4T60E Neutral Safety (With Wire Harness) 1991-96 (Cadillac, Seville)	1	
84410E	Switch, 4T60E/4T65E Neutral Safety (No Wire Harness)(With 1 Four & 1 Seven Prong Connector Made On The Switch)(External) 1997-98 (Except 1996-99 Cadillac Deville And 1996-99 Oldsmobile Aurora)	1	12450157
84410EA	Switch, 4T60E/4T65E Neutral Safety (No Wire Harness)(With 1 Four & 1 Seven Prong Connector Made On The Switch)(External)(1996-99 Cadillac Deville And Oldsmobile Aurora)	1	
84410GA	Switch, 4T65E Neutral Safety (No WIre Harness) 1999-Up (External 6 Prong Connector) (No Longer Available From Dealer)(Use 84410GAA)	1	
84410GAA	Switch, 4T65E Neutral Safety (No Wire Harness) 2003-05 (7 Prong Connector Made On The Switch)(External)	1	24222729

© Whatever It Takes Transmission Parts. Inc.

PART #	ELECTRICAL COMPONENTS (Continued)	QTY.	REFERENCE #
84410GB	Switch, 4T65E Neutral Safety (Internal) (With Manual Shaft) (6 Prong) 2000-Up (Will Work On Some Applications With 5 Prongs)	1	
74411B	Switch, 4T60E 3rd & 4th Clutch Pressure (1 Prong) 1991-Up	1	8642473
84412A	Switch, 440-T4 3rd Clutch Pressure (2 Prong)	1	8658039
84412B	Switch, 4T60E 3rd & 4th Clutch Pressure (1 Prong)(Use 74411B)	1	8642473
84413	Switch, 440-T4/4T60E 2nd, 3rd & 4th Clutch Pressure (1 Prong)(1st Design) 1983-Up	1	8658040
84413A	Switch, 440-T4/4T60E 4th Clutch Pressure (1 Prong)(2nd Design) 1983-Up	1	8668708
T84418	Solenoid, 4T60E TCC, PWM 1991-Up (Teckpak)	1	K84858
84418A	Solenoid, 4T60E TCC, PWM 1991-Up	1	8683535
T84420K	Solenoid Master Kit, 4T60E (Contains; 3 Shift, 1 TCC, & 1 PWM Solenoid)(Teckpak)	1	MS-4T60E
84421	Solenoid, 4T60E 1-2, 3-4, & TCC 1991-Up	3	10478108
84421A	Solenoid, 4T65E 1-2 & 3-4 Shift 1997-Up	2	
84425	Solenoid, 440-T4 TCC 1983-Up	1	
84425GA	Solenoid, 4T65E TCC 1997-Up	1	
T84425K	Solenoid, 440-T4 Lock-Up (6 Pack With Free Posi-Twist Travel Pack) (Teckpak)	1	
84431G	Solenoid, 4T65E (All) EPC (1.320"OD) 1997-02 (1.320"OD)(All Except Volvo)	1	10478146
84431GA	Solenoid, 4T65E EPC 2003-Up	1	24225825
84436A	Sensor, 4T60E Speed-O 1991-Up (Also Fits 4T65E 1997-99)	1	10456034
84436G	Sensor, 4T65E Output Speed 2000-Up (With Enclosed Pick-Up)	1	
84436H	Sensor, 4T65E (Volvo) (2 Wire With 28 1/2" Long Wire Harness) 1999-Up	1	
84437	Switch, 440-T4 Thermister (2 Prong)	1	8649669
84437A	Switch, 440-T4 Thermister (1 Prong)	1	8658389
84438G	Sensor, 4T65E Input Speed 1997-Up	1	
84438H	Sensor, 4T65E (Volvo) Input Speed 1999-Up	1	
84441	Element Plate Kit, 440-T4 Thermostatic Element	1	8646904
84442G	Switch, 4T65E (TFP) Throttle Valve Position (Manifold Pressure Sensor)(4 Wire) 1997-03	1	24203699
84442GA	Switch, 4T65E (TFP) Throttle Valve Position (Manifold Pressure Sensor)(1 Wire) 2003-Up (Will Retro-Fit Some 1997-Up)	1	
84444	Connector, 440-T4 Case 4 Prong (Square) 1983-Up	1	8662395
64444A	Connector, 440-T4 Case 5 Prong (Round) 1983-Up	1	
84444C	Connector, 4T60E Case 7 Prong 1991-Up	1	8651620
64445	Wire Harness, 440-T4 External (4 Wire) 1989-Up	1	
84445	Wire Harness, 4T60E External (5 Wire) 1991-93	1	
74445CK	Repair Kit, 4T65E External Wire Harness (7 & 4 Pin Neutral Safety Connector With Wires & Shrink Tubes)(1996-03 With 7 & 4 Pins)(1999-11 With 6 Pins)	1	
74445E-2K	Repair Kit, 4T60E/4T65E (Repairs The 2 Pin VSS Harness Only)(1"OD)	1	
84445EK	Repair Kit, 4T60E External Wire Harness 1991-93	1	350-0037
84445EBK	Repair Kit, 4T60E External Wire Harness 1994-Up	1	350-0038
84445GH	Wire Harness Repair, 4T65E External (20 Pin Connector)(GM Universal)(Rostra)	1	
64445K	Repair Kit, 440-T4 External Wire Harness (Square 4 Prong) 1983-Up	1	
84445K	Repair Kit, 4T60E External Wire Harness (Round 5 Prong) 1991-93	1	
84446B	Wire Harness, 440-T4 Internal (4 Prong Square Case Connector, W/1 Two Prong & 2 One Blade Connectors)	1	
84446BB	Wire Harness, 440-T4 Internal (4 Prong Round Case Connector, W/1 Two Prong & 2 One Blade Connectors)	1	
84446C	Wire Harness, 440-T4 Internal (5 Prong Case Connector, W/1 Two Prong & 3 One Blade Connectors)(15" From The 5 Prong to The 2 Prong Connector)	1	
84446CA	Wire Harness, 440-T4 Internal (5 Prong Case Connector, W/1 Two Prong & 3 One Blade Connectors)(28" From The 5 Prong to The 2 Prong Connector)	1	
84446D	Wire Harness, 440-T4 Internal (5 Prong Case Connector, W/1 Two Prong & 3 One Prong Connectors)	1	
84446E	Wire Harness, 4T60E Internal (7 Prong Connector, W/2 One Prong Connectors, & 3 Two Prong Connectors) 1991-93	1	12121131
84446EA	Wire Harness, 4T60E Internal (6 Prong Connector) 1991-93	1	12121130
84446EB	Wire Harness, 4T60E Internal (7 Prong Connector, W/4 One Prong Connectors, & 3 Two Prong Connectors) 1991-93	1	8661085
84446EC	Wire Harness, 4T60E Internal (7 Prong Connector, W/4 Two Prong Connectors, & A Clip-on Type Temperature Sensor) 1994-Up	1	350-0036
84446G	Wire Harness, 4T65E Internal (14 Prong Connector, W/6 Two Prong Connectors, 1 Four Prong Connector, & A Clip-on Type Temperature Sensor) 1997-Up	1	
84446GB	Wire Harness, 4T65E Internal (16 Prong Case Connector, W/6 Two Prong Connectors, 1 One Prong Connector, 1 Five Prong Connector & A Clip-on Type Temperature Sensor) 2002-Up	1	
84446GC	Wire Harness, 4T65E Internal (17 Prong Case Connector W/6 Two, 1 One & 1 Six Prong Connector) 2002-Up	1	
84446GD	Wire Harness, 4T65E Internal (17 Prong Case Connector W/6 Two, 1 One & 1 Five Prong Connector) 2002-Up	1	

© Whatever It Takes Transmission Parts. Inc.

84446GE ..... Wire Harness, 4T65E Internal (17 Prong Case Connector, With 5 Two Prong, 1 One Prong & 1 Six Prong Connector) 2003-Up ..... 1 .....
84446GG ..... Wire Harness, 4T65E Internal (19 Prong Case Connector, W/6 Two Prong Connector, 1 Four Prong Connector & 1 Five Prong Connector) 1997-Up 1 24230349

PART #	ELECTRICAL COMPONENTS (Continued)	QTY.	REFERENCE #
84446GU	Wire Harness, 4T65E Internal (Universal 14, 17 & 19 Pin Connector) 1997-Up	1	
350-0063	GM Computer Repair (ECM) 4T60E/4T65E (Wire Harness With Terminal Ends)(Rostra)	1	
84447A	Shift Rite, 5 Terminal Round.....	1	
84447E	Shift Rite, #34 (3 Wire Harness)	1	
84447EC.....	Interceptor, 4T60E 1993-Up.....	1	
84447F	Shift Rite, #35 (3 Wire Harness)	1	
84447G	Shift Rite, #43 (3 Wire Harness)	1	
84447GC	Interceptor, 4T65E (Except 3.4L) 1997-Up	1	
84447H.....	Shift Rite, #45 (3 Wire Harness)	1	
84447I.....	Shift Rite, #53 (3 Wire Harness)	1	

PART #	MISC. COMPONENTS	QTY.	REFERENCE #
84476G.....	Baffle, 4T65E AWD Transfer Case Adapter (Silencer Ring) (Rubber)(1/2" Thick)(5 1/4"OD) (3 Tabs With Round Hole Cutout).....	1	
84480D	Capsule W/Check Ball, 440-T4 Input Drum 1983-86	1	8633748
84480DA.....	Capsule W/Check Ball, 440-T4/4T60E Input Drum 1987-Up.....	1	8662178
84480T	Capsule W/Spring & Check Valve, 440-T4 Under Servo Tube 1983-Up	1	8668287
84480TS.....	Spring, 440-T4 Lube Tube 1983-Up.....	1	8649375
84483A	Sleeve, 440-T4 Governor Shaft to Case 1983-Up	1	8631328
84485A	Alignment Pin, 440-T4 Channel Plate to Case 1983-Up.....	2	8644685
84485B	Alignment Pin, 440-T4 Valve Body to Channel Plate 1983-Up	2	8656077
84494.....	Filler Tube, 440-T4 1984-Up	1	
T54497UA.....	Detent Cable, 440-T4 Self Adjusting Universal (Teckpak)	1	
T64498-1A.....	Grommet, 4T60E/65E/70E GM Shift Cable Repair (Fits The Thinner Late Model Shift Cables) 2007-13.....	1	

PART #	HARD PARTS	QTY.	REFERENCE #
84500.....	Pump, 440-T4 (2 Pressure Switches, No 3-2 Tube Hole) 1983-E85	1	8646939
84500AA.....	Pump, 440-T4 (3 Pressure Switches, No 3-2 Tube Hole) 1983-87.....	1	8662322
84500AB.....	Pump, 440-T4 (2 Pressure Switches, No 3-2 Tube Hole) L1985-86.....	1	
84500B	Pump, 440-T4 (2 Pressure Switches, No 3-2 Tube Hole) L1985-86 (W/1 Small Thermal Switch)(Cadillac W/Viscous Converter).....	1	
84500BA.....	Pump, 440-T4 (2 Pressure Switches, W/3-2 Tube Hole) 1987-91 (W/1 Small Thermal Switch)(Cadillac W/Viscous Converter).....	1	
84500C	Pump, 440-T4 (2 Pressure Switches, W/3-2 Tube Hole) 1987-91 (Except Cadillac W/Viscous Converter)	1	8662439
84500DA.....	Pump, 440-T4 (3 Pressure Switches, W/3-2 Tube Hole) 1988-91	1	
84500E	Pump, 4T60E (No Switches, No Brass Air Bleed)(Cover Cast # 8651508, Body Cast # 24200370) 1991-Up	1	
84500EA.....	Pump, 4T60E (No Switches, W/Brass Air Bleed) 1991-Up.....	1	
84500EB.....	Pump, 4T60E (2 Switches, No Brass Air Bleed) 1991-Up	1	
84500EC.....	Pump, 4T60E (2 Switches, W/Brass Air Bleed) 1991-Up.....	1	
84500ED.....	Pump, 4T60E (No Switches, No Brass Air Bleed)(10 Bolt Cover Cast # 24201742)(Body Cast # 24201740) 1991-Up.....	1	
84500EE.....	Pump, 4T60E (No Switches, No Brass Air Bleed)(11 Bolt Cover Cast # 24201742)(Body Cast # 24201740) 1991-Up.....	1	
84500G.....	Pump, 4T65E (Cover Cast # 24205910 or 24209404 or 24213197)(Body Cast # 24206183 or 24210098) 1997-Up	1	
84500GB	Pump, 4T65E (Cover Cast # 24221692) 2002-Up	1	

PART #	PUMP COMPONENTS	QTY.	REFERENCE #
54314B	Seal, 440-T4/4T60E/4T65E Pump Slide (Rubber) 1983-Up	1	8631283
54315B	Seal, 440-T4/4T60E/4T65E Pump Slide (Teflon) 1983-Up	1	8631877
84507PE.....	Sleeve, 440-T4/4T60E Pump Cover 1985-Up	1	8631288

PART #	HARD PARTS (Continued)	QTY.	REFERENCE #
84520E	Pump Cover, 4T60E (11 Bolt) (Cast # 8651508) 1991-Up.....	1	
84520ED.....	Pump Cover, 4T60E (10 Bolt) (Cast # 24201197 or 24201404) 1991-Up.....	1	
84520EE.....	Pump Cover, 4T60E (11 Bolt) (Cast # 24201742) 1991-Up.....	1	

© Whatever It Takes Transmission Parts. Inc.

PART #	HARD PARTS (Continued)	QTY.	REFERENCE #
64529A	Converter Reactor, 440-T4/4T60E 1983-Up	1	8644036
84529G	Converter Reactor, 4T65E 1997-Up	1	24211875
84532AB	Rotor, 440-T4/4T60E Pump 17.95MM (The Outside Of The Rotor Is Straight Front To Back) (Fits 84500 To 84500EC) (9 Vane) 1983-Up	1	8656267
84532EA	Rotor, 4T60E Pump 17.99MM (The Outside Of The Rotor Is Beveled Front To Back) (Fits 84500EE) (Retro Fits) (9 Vane) 1991-Up	1	
84532GA	Rotor, 4T65E Pump 17.99MM (The OUtside Of The Rotor Is Beveled Front To Back) (Fits 84500G tTo 84500GA) (11 Vane) 1997-Up	1	
84533AA	Vane, 440-T4 Pump 17.95MM 1983-Up	9	8644661
84533AB	Vane, 4T60E/4T65E Pump 17.97MM 1991-Up	9-11	8644662
84534AB	Slide, 440-T4/4T60E/4T65E Pump (17.96MM) 1983-Up	1	8662901
84534EA	Slide, 4T60E/4T65E Pump 17.99MM 1991-Up	1	8662904
84535	Pin, 440-T4/4T60E/4T65E Pump Slide Pivot 1983-Up (Grooved)(Without Brass Air Bleed)	1	8649477
S84535A	Pin, 440-T4/4T60E/4T65E Pump Slide Pivot (Solid)(With Brass Air Bleed)(Sonnax)	1	
84536	Spring, 440-T4/4T60E/4T65E Pump Slide (Outer) 1983-Up	1	8646189
84537	Spring, 440-T4/4T60E/4T65E Pump Slide (Inner) 1983-Up	1	8646251
84538	Ring, 440-T4/4T60E/4T65E Pump Vane 1983-Up	2	8644333
84552	Drum, 440-T4 2nd Clutch (5 Clutch)(W/2 Lube Holes in Bore) 1983-86	1	8668958
84552A	Drum, 440-T4 2nd Clutch (5 Clutch)(W/6 Lube Holes in Bore) L1985-86	1	8646929
84552B	Drum, 440-T4 2nd Clutch (6 Clutch)(W/6 Lube Holes in Bore) 1987-91	1	8661912
84552C	Drum, 4T60E 2nd Clutch (6 Clutch)(Uses a Bonded Piston) 1991-Up	1	8651919
84552G	Drum, 4T65E 2nd Clutch (6 Clutch)(No Oil Groove Between Rings) 1997-Up (Can Use 84552GA)	1	
84552GA	Drum, 4T65E 2nd Clutch (6 Clutch)(W/Deep Oil Groove Between Rings) 1997-Up	1	
84554	Drum, 440-T4 Input (Washer Type)(.233" Wide Inner Lip Seal Groove) 1983-87	1	
84554A	Drum, 440-T4 Input (Washer Type)(.107" Wide Inner Lip Seal Groove) 1983-87	1	
84554B	Drum, 440-T4 Input (Uses Bearing #232)(Does Not Have A Caged Bearing Inside) 1988-91	1	8662970
84554BA	Drum, 4T60E Input (Uses Bearing #232)(Does Not Have A Caged Bearing Inside) 1991-E93	1	8651924
84554C	Drum, 4T60E Input (W/Caged Bearing Inside)(3.690"OD 2nd Clutch Hub) L1993-Up	1	8651937
84554G	Drum, 4T65E Input (W/Caged Bearing Inside)(3.390"OD 2nd Clutch Hub) 1997-Up	1	
84558	Drum, 440-T4 Reaction W/Sun Gear (2 1/8" Tall) 1983-91	1	8676144
84558A	Drum, 4T60E Reaction W/Sun Gear (2 3/4" Tall)(W/4 Lugs For # 664) 1991-95	1	8651450
84558B	Drum, 4T60E/4T65E Reaction W/Sun Gear (3 1/4" Tall) 1995-Up	1	
84559	Drum, 4T60E Forward Band Drum (16 Roller Type Sprag) 1991-95	1	
84559B	Drum, 4T60E/4T65E Forward Band Drum (14 Roller Type Sprag) 1996-Up	1	
84560	Piston Kit, 440-T4 4th Clutch (1st Design) 1983-85	1	
84560A	Piston Kit, 440-T4/4T60E 4th Clutch (2st Design) 1986-Up	1	
84560G	Piston Kit, 4T65E 4th Clutch 1997-Up	1	
84562	Piston Kit, 440-T4 2nd Clutch L1985-91	1	
84562A	Piston Kit, 4T60E 2nd Clutch (Bonded)(5 1/8"OD Piston) 1991-Up	1	
84562G	Piston Kit, 4T65E 2nd Clutch (Bonded)(5 3/8"OD Piston) 1997-Up	1	
84564B	Piston Kit, 440-T4 3rd & Input Clutch (Lip Seal Type) 1983-91	1	
84564CA	Piston Kit, 4T60E 3rd & Input Clutch (W/Bonded 3rd Clu Piston W/Check Ball) 1991-Up	1	
84564G	Piston Kit, 4T65E 3rd & Input Clutch (W/Bonded 3rd Clu Piston No Check Ball) 1997-Up	1	
84570	Hub & Shaft, 440-T4/4T60E 4th Clutch 1983-E93	1	8685145
84570A	Hub & Shaft, 4T60E 4th Clutch L1993-95 (Retro Fits 1983-E93)	1	24201094
84570B	Hub & Shaft, 4T60E 4th Clutch (No Bearing) 1996-Up	1	24202037
84570G	Hub & Shaft, 4T65E 4th Clutch 1997-Up	1	24205603
84582	Planet, 440-T4 Front (.350" Wide Bushing) 1983-85	1	8644940
84582A	Planet, 440-T4 Front (.265" Wide Bushing)(No Bevel on Ring Gear) 1986-91	1	8668580
84582AA	Planet, 4T60E Front (.265" Wide Bushing)(W/Bevel on Outside of Ring Gear) 1991-E93	1	
84582AK	Planet Kit, 440-T4 Front W/Input Sprag (.265" Wide Bushing)(No Bevel) 1986-91	1	
84582B	Planet, 4T60E Front W/24 Outer Lugs (No Bushing) L1993-Up	1	8775372
84582G	Planet, 4T65E Front W/12 Outer Lugs (No Bushing) 1997-Up	1	
84584	Planet, 440-T4/4T65E Rear (Inner Splines Beveled on One End Only) 1983-Up	1	8661084
84584A	Planet, 4T60E Rear (Inner Splines Beveled on Both Ends) 1991-Up	1	8682462
84598	Ring Gear, 440-T4 Final Drive (70 Teeth, Right Angled) 1983-91	1	8656372
84598A	Ring Gear, 4T60E Final Drive (70 Teeth, Right Angled) 1991-94 (Hub Is 3.146" Tall)(Has A Step To Center Bearing # 254)	1	8651786
84598AA	Ring Gear, 4T60E Final Drive (70 Teeth, Right Angled) 1991-94 (Hub Is 3.146" Tall)(Does Not Have A Step To Center Bearing # 254)	1	
84598B	Ring Gear, 4T60E Final Drive (78 Teeth, Left Angled) 1995-96	1	8685582
84598C	Ring Gear, 4T65E Final Drive (78 Teeth, Right Angled) 1997-Up (Hub Is 3.143" Tall)	1	
84612	Sun Gear, 440-T4/4T60E Input (Front) 1983-E93	1	8668703
84612A	Sun Gear, 4T60E/4T65E Input (Front)(W/2 Flats on Splines) (Uses A Bearing # 241 Inside) 1990-E95 (Will Replace The 84612B)	1	8683559
84612B	Sun Gear, 4T60E/4T65E Input (Front)(W/2 Flats on Splines) (Does Not Use A Bearing # 241 Inside) L1995-Up (Can Use 84612A)	1	

© Whatever It Takes Transmission Parts. Inc.

84618	Sun Gear, 440-T4/4T60E Final Drive (38 Teeth, Right Angled, 2.660"OD) 1983-94	1	8658040
84618A	Sun Gear, 440-T4/4T60E Final Drive (34 Teeth, Right Angled, 2.380"OD) 1983-94	1	24209169
84618AA	Sun Gear, 4T60E Final Drive (34 Teeth, Left Angled, 2.170"OD) 1995-96	1	24201449
84618AB	Sun Gear, 4T60E/4T65E Final Drive (34 Teeth, Right Angled, 2.170"OD) 1997-Up	1	
84618B	Sun Gear, 440-T4/4T60E Final Drive (30 Teeth, Right Angled, 2.130"OD) 1983-94	1	8644114
84618C	Sun Gear, 4T60E Final Drive (38 Teeth, Left Angled, 2.410"OD) 1995-96	1	
84618CA	Sun Gear, 4T60E/4T65E Final Drive (38 Teeth, Right Angled, 2.410"OD) 1997-Up	1	
84618D	Sun Gear, 4T60E Final Drive (42 Teeth, Left Angled, 2.615"OD) 1995-96	1	
84618DA	Sun Gear, 4T60E/4T65E Final Drive (42 Teeth, Right Angled, 2.615"OD) 1997-Up	1	
84619	Spacer, 440-T4 Input Sun Gear .497" 1983-84	1	8649545
84619A	Spacer, 440-T4/4T60E Input Sun Gear .350" 1985-E93	1	8658797
84619B	Spacer, 4T60E/4T65E Input Sun Gear .339" L1993-Up	1	8682442
84624	Shell, 440-T4/4T60E Reverse Reaction 1983-97	1	24202422
84624B	Shell, 4T65E Reverse Reaction (1st Design) 1997-Up	1	8644946
84624GA	Shell, 4T65E Reverse Reaction (2nd Design) 1997-Up	1	

PART #	SPRAGS & ONE WAY CLUTCHES	QTY.	REFERENCE #
84646	Sprag Assembly, 440-T4 3rd Clutch 1983-86	1	8662975
84646A	Sprag Assembly, 440-T4/4T60E 3rd Clutch 1987-93	1	8681406
84646CK	Sprag Assembly, 4T60E/4T65E 3rd Clutch & Low Input (1 Piece) L1993-Up	1	24204036
84646D	Sprag Assembly, 4T65E 3rd Clutch (Mechanical Diode) 2003-Up	1	
84648	Sprag Assembly, 440-T4 Low Input 1983-E86	1	8646986
84648A	Sprag Assembly, 440-T4/4T60E Low Input L1886-E93	1	8646985
84648D	Sprag Assembly, 4T65E Low Input (Mechanical Diode) 2003-Up (Does Not Use #84619B)	1	
84652	Sprag, 4T60E 1-2 Roller (16 Rollers) 1991-95 (Use 44654)	1	6261305
44654	Sprag, 4T60E 1-2 Roller (16 Rollers) 1991-95	1	6261305
84652A	Sprag, 4T60E/4T65E 1-2 Roller (14 Roller, Plastic Cage) 1996-Up	1	
S84652A-1K	Spring Set, 4T60E 1-2 Roller Sprag (Heavy Duty)(16 Per Set)(Sonnax)	1	K84956SP
84656	Sprag, 440-T4/4T60E 3rd Clutch 1983-E93	1	8662876
84656B	Sprag, 4T60E/4T65E 3rd Clutch L1993-Up (Use 84658B)	1	
84658	Sprag, 440-T4 Low Input 1983-E86	1	8658501
84658A	Sprag, 440-T4/4T60E Low Input L1986-E93	1	8662031
84658B	Sprag, 4T60E Low Input & 3rd Clutch L1993-95	1	8685220
84658C	Sprag, 4T60E/4T65E Low Input & 3rd Clutch 1996-Up	1	24204036

PART #	HARD PARTS (Continued)	QTY.	REFERENCE #
84664	Inner Race, 4T60E 1-2 Roller 1991-95	1	7471031
84666	Cam, 440-T4 3rd Clutch Sprag 1983-86	1	
84667	Outer Race, 440-T4 3rd Clutch Sprag 1983-86	1	8656714
84667A	Outer Race, 440-T4/4T60E 3rd Clutch Sprag 1988-E93	1	8658795
84667B	Outer Race, 4T60E/4T65E 3rd Clutch Sprag L1993-Up	1	
84668	Inner Race, 440-T4/4T60E Input Sprag 1983-E93	1	
84668A	Inner Race, 4T60E/4T65E 3rd Clutch & Input Sprag (1 Piece) L1993-Up	1	
84669	Outer Race, 440-T4/4T60E Input Sprag 1988-E93	1	
84669A	Outer Race, 4T60E/4T65E Input Sprag L1993-Up	1	
84671	Pump Shaft, 440-T4/4T60E Oil Pump Drive (9 3/4" Long) 1983-Up	1	8656624
84671G	Pump Shaft, 4T65E Oil Pump Drive (10" Long) 1997-Up	1	24209284
64673A	Turbine Shaft, 440-T4 1983-91	1	8652382
84673A	Turbine Shaft, 4T60E (6" Long) 1991-Up	1	24202468
84673G	Turbine Shaft, 4T65E (6 1/4" Long) 1994-Up	1	24208853
84674	Shaft, 440-T4 Final Drive Sun Gear (4 1/2" Long) 1983-85	1	8649543
84674A	Shaft, 440-T4 Final Drive Sun Gear (4 1/2" Long) 1986-91	1	8661020
84674B	Shaft, 4T60E/4T65E Final Drive Sun Gear (6 1/4" Long) 1991-Up	1	8651453
84678	Output Shaft, 440-T4 (Uses a Bushing in Center) 1983	1	8656678
84678A	Output Shaft, 440-T4 (Uses a 1 3/4" Long # 241 Bearing) 1984-E85	1	8656408
84678B	Output Shaft, 440-T4 (Uses a 1 3/4" Long # 241 Bearing)(18" Long) L1985-91	1	8675990
84678BA	Output Shaft, 440-T4 (Uses a 1 3/4" Long # 241 Bearing)(19 11/16" Long) L1985-91	1	
84678C	Output Shaft, 4T60E (Uses a 3/4" Long # 241 Bearing)(17 3/4" Long) 1991-E93	1	8668990
84678D	Output Shaft, 4T60E (Uses a 3/4" Long # 241 Bearing)(19 1/2" Long) 1991-E93	1	8651716
84678E	Output Shaft, 4T60E (Has No Bearing)(19 1/2" Long) L1993-95	1	8683560
84678G	Output Shaft, 4T60E/4T65E (Has a Bearing Under 4th Clutch Hub)(19 1/2" Long) 1996-Up	1	
84678H	Output Shaft, 4T65E (Has No Bearing)(19 3/4" Long) 1997-Up (1.800" Spline Length)	1	
84678HA	Output Shaft, 4T65E (Volvo) (19 5/8" Long) (1.630" Spline Length) (With Long Wide Band 4" From End Of Shaft) 1999-Up	1	
84678HB	Output Shaft, 4T65E (Volvo) (19 15/16" Long) (1.630" Spline Length) (With Long Wide Band 4" From End Of Shaft) 1999-Up	1	
84680	Governor, 440-T4 (W/Out Plastic Speed-O Gear) 1983-Up	1	8655962
84680A	Governor, 440-T4 (W/8 Tooth Electronic Pick-Up) 1983-Up	1	8634933

© Whatever It Takes Transmission Parts. Inc.

PART #	HARD PARTS (Continued)	QTY.	REFERENCE #
84680B	Governor, 440-T4 (W/11 Tooth Electronic Pick-Up) 1983-Up	1	8644961
84680C	Governor, 440-T4 (W/14 Tooth Electronic Pick-Up) 1983-Up	1	8644962
84680D	Governor, 440-T4 (W/15 Tooth Electronic Pick-Up) 1983-Up	1	8644963
64683A	Gear, 440-T4 Governor Drive 1980-Up	1	
84683A	Pick-Up, 4T60E/4T65E Speed Sensor (29 Tooth) 1991-Up	1	
84683AA	Pick-Up, 4T60E/4T65E Speed Sensor (30 Tooth) 1991-Up	1	
84683AB	Pick-Up, 4T60E/4T65E Speed Sensor (31 Tooth) 1991-95	1	
84686	Cover, 440-T4 Governor/Speed-O Housing 1983-87	1	8644924
84686A	Cover, 440-T4 Governor/Speed-O Housing 1988-90	1	8661914
84686C	Cover, 440-T4 Governor/Speed-O Housing (Electronic) 1991-Up	1	8662926
84690	Gear, 440-T4/4T60E/4T65E Parking (2WD)(.953" Thick)(Uses Bearing # 84254G .155" Thick) (Bearing Pocket Is .090" Deep) 1983-Up	1	8658416
84690G	Gear, 4T65E Parking (AWD)(.868" Thick) 1997-Up	1	
84690GA	Gear, 4T65E Parking (2WD)(.953" Thick)(Uses Bearing # 84254GA .220" Thick)(Bearing Pocket Is .175" Deep) 1997-Up	1	
84960GAK	Gear W/Bearing Kit, 4T65E (2WD/AWD)(.953" Thick)(Uses Bearing #84254GA That Is .220" Thick) (Retro Fits All 1997-Up 2WD/AWD)(Contains 84960GA & 84254GA)	1	
84693	Bracket, 440-T4 Holds Oil Scoop in 1983-91	1	8656243
84697A	Oil Scoop, 440-T4/4T60E Bottom 1983-93	1	8656242
84698	Oil Dam, 440-T4/4T60E/4T65E Front Planet 1983-Up	1	8658368
84699	Weir, 440-T4 Oil Reservoir 1983-91	1	8644025
84699A	Weir, 4T60E/4T65E Oil Reservoir 1992-6/98	1	8679171
84700A	Chain, 440-T4/4T60E (W/Round Pins) 7/8" Wide 1983-93	1	8660099
84700B	Chain, 4T60E (W/D Style Pins)(Can Use 84700C) 1991-Up	1	8682603
84700C	Chain, 4T60E (W/Mouse Ear Link)(With D Pins Or Rocker Pins) 1993-Up	1	24202447
84700G	Chain, 4T65E (W/Mouse Ear Link & D Style Pins)(1/2" Wide)(2 Per Pack) 1997-04	1	
84700GB	Chain, 4T65E (W/Mouse Ear Link & D Style Pins)(1/2" Wide)(Heavy Duty) 2005-Up (Contains 2 Chains)(Will Retro Fit To 1997)(Replaces 84700G)(Also Fits Volvo 4T65E)	2	
84700L	Chain, 440-T4 (Allante) 1989-Up	1	8661010
84702	Scoop, 440-T4 Chain Scavenging (1st Design)(For 35T Sprocket) 1983-E85	1	8656562
84702A	Scoop, 440-T4 Chain Scavenging (1st Design)(For 33T Sprocket) 1983-E85	1	8656565
84702B	Scoop, 440-T4/4T60E/4T65E Chain Scavenging(2nd Design)(For 33T Sprocket) L1985-Up	1	8651622
84702C	Scoop, 440-T4/4T60E/4T65E Chain Scavenging(2nd Design)(For 35T Sprocket) L1985-Up	1	8668613
84702D	Scoop, 440-T4/4T60E/4T65E Chain Scavenging(2nd Design)(For 37T Sprocket) L1985-Up	1	
84705A	Sprocket, 440-T4/4T60E Drive (33 Tooth, 3.756"OD) 1983-92	1	8651568
84705B	Sprocket, 4T60E Drive (33 Tooth, 3.700"OD) 1993-Up	1	8682599
84705C	Sprocket, 440-T4/4T60E Drive (37 Tooth, 4.233"OD) 1983-92	1	8644679
84705D	Sprocket, 4T60E Drive (37 Tooth, 4.181"OD) 1993-Up	1	8682597
84705E	Sprocket, 440-T4/4T60E Drive (38 Tooth) 1983-92	1	
84705F	Sprocket, 440-T4/4T60E Drive (35 Tooth) 1983-92	1	8644677
84705FA	Sprocket, 4T60E Drive (35 Tooth) 1993-Up	1	
84705G	Sprocket, 4T65E Drive (33 Tooth, Dual Chain Type)(Uses Washer # 279 W/3 Round Solid Tabs) 1997-00	1	
84705GA	Sprocket, 4T65E Drive (33 Tooth, Dual Chain Type)(Uses Washer # 279 W/3 Round Split Tabs, That Locks To Sprocket) 2001-Up	1	
84705GAK	Sprocket Chain Set, 4T65E(33 Tooth Drive, 37 Tooth Driven Sprockets) 2001-Up	1	TK001
84705GB	Sprocket, 4T65E Drive (37 Tooth, Dual Chain Type) 1997-Up	1	
84705GBK	Sprocket Chain Set, 4T65E(37 Tooth Drive, 33 Tooth Driven Sprockets) 1997-Up	1	TK003
84705H	Sprocket, 4T65E Drive (35 Teeth Dual Chain Type)(Uses Washer # 279 W/3 Round Solid Tabs) 1997-00	1	
84705HA	Sprocket, 4T65E Drive (35 Tooth, Dual Chain Type)(Uses Washer # 279 W/3 Round Split Tabs, That Locks To Sprocket) 2001-Up	1	
84705HK	Sprocket Chain Set, 4T65E (35 Teeth Drive / 35Teeth Driven Sprockets) 1997-00	1	
84705J	Sprocket, 4T65E Drive (37 Teeth Dual Chain Type) 1997-00 (Uses Washer # 84279G With 3 Round Solid Tabs)	1	
84705JA	Sprocket, 4T65E Drive (37 Teeth Dual Chain Type) 2001-Up (Uses Washer # 84279GA With 3 Round Split Tabs, Locks To Sprocket)	1	
84705JAK	Sprocket Chain Set, 4T65E (37 Teeth Drive / 33 Teeth Driven Sprockets) 2001-Up (Will Retro Fit To 1997 If The 84279GA Washer Is Used)	1	
84705L	Sprocket, 440-T4 Drive (Allante) 1989-Up	1	8661003
84706A	Sprocket, 440-T4/4T60E Driven (37 Tooth, 4.233"OD) 1983-92	1	8678146
84706B	Sprocket, 4T60E Driven (37 Tooth, 4.181"OD) 1993-Up	1	8682602
84706C	Sprocket, 440-T4/4T60E Driven (33 Tooth, 3.756"OD) 1983-92	1	8668110
84706CA	Sprocket, 4T60E Driven (33 Tooth, 3.700"OD) 1993-Up	1	8682600
84706D	Sprocket, 440-T4/4T60E Driven (32 Tooth) 1983-92	1	
84706F	Sprocket, 440-T4/4T60E Driven (35 Tooth) 1983-92	1	8646114
84706FA	Sprocket, 4T60E Driven (35 Tooth) 1993-Up	1	
84706GA	Sprocket, 4T65E Driven (37 Tooth, Dual Chain Type) 2001-Up	1	

© Whatever It Takes Transmission Parts. Inc.

84706H.....Sprocket, 4T65E Driven (35 Teeth Dual Chain Type) 1997-00.....1.....
84706J.....Sprocket, 4T65E Driven (33 Teeth Dual Chain Type) 1997-Up.....1.....
84706L.....Sprocket, 440-T4 Driven (Allante) 1989-Up.....1.....8675037
84713.....Support, 440-T4 Driven Sprocket (1st Design) 1983-85.....1.....8658097
84713A.....Support, 440-T4 Driven Sprocket (2nd Design)(Scoupe Type) 1986-90.....1.....8668385
84713B.....Support, 440-T4/4T60E Driven Sprocket (3rd Design) 1991-Up.....1.....8651408
84713C.....Support, 4T60E Driven Sprocket 1992-Up.....1.....8682611
84713G.....Support, 4T65E Driven Sprocket (Uses a .125" Wide Ring W/Expander) 1997-E98.....1.....
84713GA.....Support, 4T65E Driven Sprocket (Uses a .100" Wide Ring W/No Expander) (Cast # 24203724)
.....L1998-02.....1.....
84713GB.....Support, 4T65E Driven Sprocket (Cast # 24219592) 2003-Up.....1.....
84713L.....Support, 440-T4 Driven Sprocket (Allante) 1989-Up.....1.....8668384
84715AK.....Diff. Assy, 440-T4 (W/2.660"OD 38 Tooth Right Angle Sun Gear) .705"OD Pin 1983-90.....1.....
84715ABK.....Diff. Assy, 440-T4 (W/2.660"OD 38 Tooth Right Angle Sun Gear) .760"OD Pin 1983-90.....1.....
84715ACK.....Diff. Assy, 440-T4/4T60E (W/2.660"OD 38 Tooth Right Angle Sun Gear) .705"OD Pin
.....(30 Tooth Pick-Up) W/Ring Gear 1991-94.....1.....
84715ADK.....Diff. Assy, 440-T4/4T60E (W/2.660"OD 38 Tooth Right Angle Sun Gear) .705"OD Pin
.....(29 Tooth Pick-Up) W/Ring Gear 1991-94.....1.....
84715AEK.....Diff. Assy, 440-T4/4T60E (W/2.660"OD 38 Tooth Right Angle Sun Gear) .705"OD Pin
.....(31 Tooth Pick-Up) W/Ring Gear 1991-94.....1.....
84715AGK.....Diff. Assy, 4T60E (W/2.410"OD 38 Tooth Left Angle Sun Gear) .705"OD Pin
.....(31 Tooth Pick-Up) W/Ring Gear 1995-96.....1.....
84715AHK.....Diff. Assy, 4T60E (W/2.410"OD 38 Tooth Left Angle Sun Gear) .705"OD Pin
.....(30 Tooth Pick-Up) W/Ring Gear 1995-96.....1.....
84715ALK.....Diff. Assy, 4T60E/4T65E (W/2.410"OD 38 Tooth Right Angle Sun Gear) .705"OD Pin
.....(31 Tooth Pick-Up) W/Ring Gear 1997-Up.....1.....
84715AMK.....Diff. Assy, 4T60E/4T65E (W/2.410"OD 38 Tooth Right Angle Sun Gear) .705"OD Pin
.....(30 Tooth Pick-Up) W/Ring Gear 1997-Up.....1.....
84715BK.....Diff. Assy, 440-T4 (W/2.380"OD 34 Tooth Right Angle Sun Gear) .705"OD Pin 1983-90.....1.....
84715BAK.....Diff. Assy, 440-T4 (W/2.380"OD 34 Tooth Right Angle Sun Gear) .760"OD Pin 1983-90.....1.....
84715BBK.....Diff. Assy, 440-T4/4T60E (W/2.380"OD 34 Tooth Right Angle Sun Gear) .705"OD Pin
.....(30 Tooth Pick-Up) W/Ring Gear 1991-94.....1.....
84715BCK.....Diff. Assy, 440-T4/4T60E (W/2.380"OD 34 Tooth Right Angle Sun Gear) .705"OD Pin
.....(29 Tooth Pick-Up) W/Ring Gear 1991-94.....1.....
84715BDK.....Diff. Assy, 440-T4/4T60E (W/2.380"OD 34 Tooth Right Angle Sun Gear) .705"OD Pin
.....(31 Tooth Pick-Up) W/Ring Gear 1991-94.....1.....
84715BEK.....Diff. Assy, 4T60E (W/2.170"OD 34 Tooth Left Angle Sun Gear) .705"OD Pin
.....(31 Tooth Pick-Up) W/Ring Gear 1995-96.....1.....
84715BFK.....Diff. Assy, 4T60E (W/2.170"OD 34 Tooth Left Angle Sun Gear) .705"OD Pin
.....(29 Tooth Pick-Up) W/Ring Gear 1995-96.....1.....
84715BGK.....Diff. Assy, 4T60E (W/2.170"OD 34 Tooth Left Angle Sun Gear) .705"OD Pin
.....(30 Tooth Pick-Up) W/Ring Gear 1995-96.....1.....
84715BHK.....Diff. Assy, 4T60E/4T65E (W/2.170"OD 34 Tooth Right Angle Sun Gear) .705"OD Pin
.....(30 Tooth Pick-Up) W/Ring Gear 1997-Up.....1.....
84715BJK.....Diff. Assy, 4T60E/4T65E (W/2.170"OD 34 Tooth Right Angle Sun Gear) .705"OD Pin
.....(31 Tooth Pick-Up) W/Ring Gear 1997-Up.....1.....
84715BLK.....Diff. Assy, 4T60E/4T65E (W/2.170"OD 34 Tooth Right Angle Sun Gear) .805"OD Pin
.....(30 Tooth Pick-Up) W/Ring Gear 1997-Up (With 1.575"OD Nose On Rear Of The Differential).....1.....
84715BMK.....Diff. Assy, 4T60E/4T65E (W/2.170"OD 34 Tooth, Right Angle Sun Gear) .805"OD Pin
.....(30 Teeth Pick-Up) W/Ring Gear 1997-Up (With 2.512"OD Nose On Rear Of The Differential).....1.....
84715BNK.....Differential Assembly, 4T60E/4T65E (With 2.170"OD, 34 Teeth Right Angle Sun Gear) .784"OD
.....Pin (30 Teeth Pick-Up) W/Ring Gear 1997-Up.....1.....
84715BPK.....Differential Assembly, 4T60E/4T65E AWD (With 2.170"OD, 34 Teeth Right Angle Sun Gear)
.....(With Ring Gear)(With 54 Teeth Transfer Gear) 1997-Up.....1.....
84715CK.....Diff. Assy, 440-T4 (W/2.130"OD 30 Tooth Right Angle Sun Gear) .705"OD Pin 1983-90.....1.....
84715CAK.....Diff. Assy, 440-T4 (W/2.130"OD 30 Tooth Right Angle Sun Gear) .760"OD Pin 1983-90.....1.....
84715CDK.....Diff. Assy, 440-T4/4T60E (W/2.130"OD 30 Tooth Right Angle Sun Gear) .705"OD Pin
.....(31 Tooth Pick-Up) W/Ring Gear 1991-94.....1.....
84715CEK.....Diff. Assy, 440-T4/4T60E (W/2.130"OD 30 Tooth Right Angle Sun Gear) .705"OD Pin
.....(29 Tooth Pick-Up) W/Ring Gear 1991-94.....1.....
84715CGK.....Diff. Assy, 440-T4/4T60E (W/2.130"OD 30 Tooth Right Angle Sun Gear) .705"OD Pin
.....(30 Tooth Pick-Up) W/Ring Gear 1991-94.....1.....
84715DAK.....Diff. Assy, 4T60E (W/2.615"OD 42 Tooth Left Angle Sun Gear) .705"OD Pin
.....(31 Tooth Pick-Up) W/Ring Gear 1995-961.....1.....
84715DBK.....Diff. Assy, 4T60E (W/2.615"OD 42 Tooth Left Angle Sun Gear) .705"OD Pin
.....(30 Tooth Pick-Up) W/Ring Gear 1995-96.....1.....
84715DDK.....Diff. Assy, 4T60E/4T65E (W/2.615"OD 42 Tooth Right Angle Sun Gear) .705"OD Pin
.....(31 Tooth Pick-Up) W/Ring Gear 1997-Up.....1.....
84715DEK.....Diff. Assy, 4T60E/4T65E (W/2.615"OD 42 Tooth Right Angle Sun Gear) .705"OD Pin
.....(30 Tooth Pick-Up) W/Ring Gear 1997-Up.....1.....

© Whatever It Takes Transmission Parts. Inc.

PART #	HARD PARTS (Continued)	QTY.	REFERENCE #
84715DFK	Diff. Assy, 4T60E/4T65E (W/2.615”OD 42 Teeth Right Angle Sun Gear) .760”OD Pin (30 Teeth Pick-Up) W/Ring Gear 1997-Up	1	
S84717A-7	Washer, 440-T4/4T60E/4T65E Differential Side Gear (4 Per Set) (Sonnax)	1	
84740	Valve Body, 440-T4 (W/Small Check Balls Only) 1983-E85	1	
84740A	Valve Body, 440-T4 (W/Large & Small Check Balls) L1985-92	1	
84740AA	Valve Body, 4T60E (3 Solenoids) 1991-E93 (Cast #284 On Channel Plate) (The Primary 1-2 Accumulator Plug Is Steel & Protrudes Out Past The Valve Body)	1	
84740B	Valve Body, 4T60E (3 Solenoid) L1993-E94 (Cast #217 On Channel Plate)(The Primary 1-2 Accumulator Plug is Steel & Protrudes Out Past The Valve Body)	1	
84740BA	Valve Body, 4T60E (4 Solenoid L1994-Up)(The Primary 1-2 Accumulator Plug is Steel And Protrudes Out Past The Valve Body)	1	
84740BAA	Valve Body, 4T60E (4 Solenoids) 1991-E93 (Cast #284 On Channel Plate) (The Primary 1-2 Accumulator Plug Is Aluminum & Protrudes Out Past The Valve Body)	1	
84740BB	Valve Body, 4T60E (4 Solenoid)L1993-E94 (Cast #217 On Channel Plate) (The Primary 1-2 Accumulator Plug is Aluminum & Protrudes Out Past The Valve Body)	1	
84740BC	Valve Body, 4T60E (4 Solenoid) L1994-Up (The Primary 1-2 Accumulator Plug Is Aluminum & Protrudes Out Past The Valve Body)	1	
84740BD	Valve Body, 4T60E (4 Solenoid) 1991-E93 (Cast #284 On Channel Plate) (The Primary 1-2 Accumulator Plug Is Steel & Protrudes Out Past The Valve Body)	1	
84740C	Valve Body, 4T60E (4 Solenoid) L1993-E94 (Cast #217 On Channel Plate) (The Primary 1-2 Accumulator Plug is Steel & Protrudes Out Past The Valve Body)	1	
84740CA	Valve Body, 4T60E (4 Solenoid) L1993-E94 (Cast #217 On Channel Plate) (The Primary 1-2 Accumulator Plug Is Steel & Is Recessed In From The Valve Body)	1	
84740CB	Valve Body, 4T60E (4 Solenoid) 1991-E93 (Cast #284 On Channel Plate) (The Primary 1-2 Accumulator Plug Is Steel & Is Recessed In From The Valve Body (Cast # 764 Only)	1	
84740D	Valve Body, 4T60E (4 Solenoid) L1994-Up (The Primary 1-2 Accumulator Plug is Steel & is Recessed in From The Valve Body) (Comes With S84741CK Already Installed)	1	
84740GA	Valve Body, 4T65E (GM)(4 Solenoids, 2 Square & 2 Round) 1997-02 (Tested) (With Or Without Reverse Or Forward Boost Valve) (The EPC Solenoid Is 1.320”OD) (Comes With S84741GPK Already Installed and Other Necessary Updates)(Also Fits Volvo Without Geartronic Feature 1999-02)	1	
84740GB	Valve Body, 4T65E (GM)(4 Solenoids, 2 Square & 2 Round) 2002-03 (Tested) (Does Not Have A Reverse Or A Forward Servo Boost Valve) (The EPC Solenoid Is .862”OD)(Comes With S84741GPK Already Installed And Other Necessary Updates)(Uses A 4 Wire Manifold Pressure Switch)(Fits A 3 Piece Type Pump # 84500GB)	1	
84740GC	Valve Body, 4T65E (GM)(4 Solenoids, 2 Square & 2 Round) 2002-Up (Tested) (Does Not Have A Reverse Or A Forward Servo Boost Valve) (The EPC Solenoid Is .862”OD) (Comes With S84741GPK Already Installed & Other Necessary Updates)(Uses A 1 Wire Manifold Pressure Switch)(Fits A 3 Piece Type Pump # 84500GB)	1	
84740GCA	Valve Body, 4T65E (GM)(4 Solenoid, 2 Square & 2 Round) 2002-03 (Tested)(Does Not Have A Reverse Or A Forward Boost Valve)(The EPC Solenoid Is .862”OD)(Comes With S84741GPK Already Installed & Other Necessary Updates)(Uses A 1 Wire Manifold Pressure Switch)(Fits A 2 Piece Type Pump # 84500G)	1	
84740GD	Valve Body, 4T65E (Volvo)(4 Solenoids, 2 Square & 2 Round) 1997-02 (The EPC Solenoid Is 1.320”OD)(Uses A 4 Wire Manifold Pressure Switch)	1	
84740GE	Valve Body, 4T65E (Volvo)(4 Solenoids, 2 Square & 2 Round) 2003-Up (The EPC Solenoid Is .862”OD)(Uses A 1 Wire Manifold Pressure Switch)	1	
84740H	Valve Body, 4T65E (Volvo With Geartronic Feature) 1999-02	1	

PART #	VALVE BODY COMPONENTS	QTY.	REFERENCE #
84209	Bearing, 440-T4/4T60E Pump Shaft 1983-Up	1	8644516
84209G	Sleeve, 4T65E Pump Shaft (Presses Into The Valve Body) 1997-Up	1	
S84741APK	Valve Kit, 440-T4/4T60E/4T65E Pressure Regulator (Oversized)(Sonnax)(Must Use T-84754-TL46)	1	
T-84754-TL46	Reamer & Jig For S84741APK	1	
S84741BCK	Sure Cure Kit, 4T60E 1993-96 (Sonnax)	1	
S84741BDK	Sure Cure Kit, 4T60E 1997-Up (Sonnax)	1	
S84741BK	TCC Regulator Valve Kit, 4T60E (PWM)(Uses T-84754-RM Reamer)(Sonnax) 1991-93	1	84754-08K
T-84754-RM	Reamer For S84741BK	1	
S84741C-1	TCC Apply Valve, 440-T4/4T60E (Sonnax) 1983-96	1	84754-22K
84741C-2	Lock-Up Sleeve, 440-T4/4T60E Input & 3rd Clutch 1983-Up	1	8656367
84741C-3	Spring, 440-T4 TCC Valve 1983-Up	1	8656018
84741C-3K	Spring Kit, 440-T4 TCC 1983-Up	1	
84741C-4	Retainer, 440-T4 TCC Valve 1983-Up	1	8649428
84741C-6	Plug, 440-T4 TCC 1983-Up	1	8649434
S84741CA-1	TCC Apply Valve, 440-T4/4T60E (Oversized, Uses T-84754-TL Reamer)(Sonnax) 1983-96	1	84754-16K
S84741CCK	TCC Apply Valve, 4T60E (Sonnax) 1997-Up	1	84754-98K

© Whatever It Takes Transmission Parts. Inc.

S84741CDK	TCC Apply Valve, 4T60E (Oversized, Uses T-84754-TL, & T-84754-DJ2)(Sonnax) 1997-Up	1	84754-97K
T-84754-DJ2	Drill Jig, 4T60E TCC Apply Valve Bore 1997-Up (Sonnax)	1	
T-84754-RM	Reamer For T-84754-DJ2	1	
T-84754-TL	Tool Kit W/Reamer & Drill Jig, 4T60E (Includes All Tools Needed For Installation Of S84741CDK & S84741CA-1)	1	
84741CE-3	Spring, 4T60E Anti-Shutter 1991-Up	1	
S84741CGK	TCC Apply Valve, 4T65E (Oversized, With O-Ring For TCC Regulated Apply Valve End Plug) (Sonnax) 1997-Up (Uses T-F-84754-TL50 Reamer)	1	
T-F-84754-TL50	Reamer For S84741CGK	1	
S84741CK	TCC Regulator Valve Kit, 4T60E (Sonnax) 1993-Up	1	84754-01K
S84741CR-2A	SLeeve, 4T60E Isolator Valve (Sonnax) 1993-Up (Requires T-84754-TL6 Tool Kit)	1	
T-84754-TL6	Tool Kit For S84741CR-2A (Contains: Roughing Reamer, Finishing Reamer, Roughing Reamer Jig & Finishing Reamer Jig)	1	
S84741D-4K	Retainer Set, 4T60/4T60E/4T65E Forward & Reverse Servo Boost Valve Retainer Roll Pins (10 Per Set) (Sonnax)	1	
S84741DAK	Servo Boost Valve Kit, 4T60E/4T65E Forward/Reverse (Sonnax) Includes: 1 Oversize Valve, 2 Springs, 1 Retaining Pin (Must Use T-84754-TL2 Reamer For 4T60E Or T-84754-TL4 For 4T65E)	1	
T-84754-TL2	Reamer For S84741DAK (Fits 4T60E & 4T65E)(Sonnax)	1	
T-84754-TL4	Reamer, For S84741DAK (4T60) 440-T4 Only (Sonnax)	1	
S84741E-1G	Valve, 4T65E 1-2 Accumulator (Oversized)(Sonnax)(Must Use T-F-84754-TL57 & T-VB-Fix)	1	
T-F-84754-TL57	Reamer For S84741E-1G	1	
84741E-4	Retainer, 440-T4 1-2 Accumulator & 3-4 M.T.V. 1983-Up	2	8644079
84741EA-4	Retainer, 4T60E 1-2 Accumulator Primary Valve, Secondary, 2-4, & 3-4 1991-92	4	8651493
84741EB-4	Retainer, 4T60E 1-2 Accumulator Primary Valve, Secondary, 2-4, & 3-4 1993-Up	4	8681510
S84741EB-GK	Valve & Sleeve Kit, 4T65E 2-3 Accumulator (Sonnax)	1	
S84741EC-GK	Valve & Spring Kit, 4T65E 3-4 Accumulator (Oversized)(GM)(Sonnax)(Must Use T-F-84754-TL55 & T-VB-FIX)	1	
S84741EC-GAK	Valve & Spring Kit, 4T65E 3-4 Accumulator (Oversized)(Volvo)(Sonnax)(Must Use T-F-84754-TL55 and T-VB-FIX)	1	
T-F-84754-TL55	Reamer For S84741-EC-GK and S84741EC-GAK	1	
84741E-6	Plug, 440-T4 Accumulator 1983-Up	1	8644794
S84741F-1X	Valve, 4T65E Torque Signal (Oversize) (Sonnax) (Use With Reamer T-84754-TL44)	1	
T-84754-TL44	Reamer, For The S84741F-1X (Sonnax)	1	
84741G-5B	Check Ball, 440-T4/4T60E Valve Body (.375") (Torlon)	AR	
S84741GC-1	Valve, 4T65E TCC Apply (With Teflon Rings) 1997-Up (Sonnax)	1	
S84741GC-1SK	Service Kit, 4T65E (For S84741GC-1)(5 Teflon Rings)(Sonnax)	1	
S84741GCK	TCC Regulator Apply Valve Kit, 4T65E (Valve, Sleeve, & Spring)(Sonnax) 1997-Up (Must Use T-84754-TL3)	1	84754-34K
T-84754-TL3	Tool Kit, For S84741GCK (4T65E)	1	
S84741GDK	Sure Cure Kit, 4T65E 1997-Up (Sonnax) Requires Tools # T-84754-TL3, T-VB-Fix & T-F-84596-TL	1	
T-F-84596-TL	Reamer Set, For The S84741GDK (Sonnax)	1	
T-VB-Fix	Valve Body Reaming Fixture (Sonnax)	1	
S84741GPK	Boost Valve Kit, 4T65E (Valve & Sleeve) 1997-Up (Sonnax)	1	84754-30K
S84741GPK-1	Line Pressure Booster Kit, 4T65E(Contains; Large Ratio Line Boost & Rev Boost Valves, Sleeve, Plug, & Pressure Regulator Spring)(Sonnax)	1	
84741H-1	Valve, 440-T4 3-2 Down Shift (in Valve Body) 1983-Up	1	8656084
S84741HA-1	Valve, 4T60E 3-2 Manual Downshift (Sonnax)	1	
S84741HC-1	Valve, 4T60E 4-3 Manual Downshift (Sonnax)	1	
S84741HC-4K	Retaining Clip Set, 440-T4/4T60E 4-3 Downshift Valve (10 Per Set) (Sonnax)	1	
S84741M-1	Modulated Boost Valve, 440-T4/4T60E (W/Sleeve & Spring)(Low Ratio)(Sonnax) 1983-Up	1	84754-12K
S84741MA-1	Modulated Boost Valve, 440-T4/4T60E (W/Sleeve & Spring)(High Ratio)(Sonnax) 1983-Up	1	84754-17K
S84741MAK	Modulated & Reverse Boost Kit, 440-T4/4T60E (High Ratio)(Sonnax) 1983-Up	1	84754-25K
S84741MK	Modulated & Reverse Boost Kit, 440-T4/4T60E (Low Ratio)(Sonnax) 1983-Up	1	84754-24K
84741N-4	Throttle Valve Plunger, 440-T4 .357" (Steel) 1983-Up	1	
84741NA-4	Throttle Valve Plunger, 440-T4 .396" (Steel) 1983-Up	1	
84741NA-7	Bushing, 440-T4 Throttle Valve Plunger .540" (Stamped K) 1983-Up	1	8649317
84741NB-7	Bushing, 440-T4 Throttle Valve Plunger .625" (Stamped L) 1983-Up	1	8649641
84741NC-7	Bushing, 440-T4 Throttle Valve Plunger .725" (Stamped M) 1983-Up	1	8649730
84741ND-7	Bushing, 440-T4 Throttle Valve Plunger .745" (Stamped H) 1983-Up	1	8646435
84741NE-7	Bushing, 440-T4 Throttle Valve Plunger .775" (Stamped P) 1983-Up	1	8682218
S84741R-4K	E-Clip Set, 440-T4/4T60E Reverse Boost Valve (Sonnax) (10 Per Set)	1	
S84741RAK-1	Reverse Boost Valve, 440-T4/4T60E (W/Sleeve & Spring)(High Ratio)(Sonnax) 1983-Up	1	84754-19K
S84741RK-1	Reverse Boost Valve, 440-T4/4T60E (W/Sleeve & Spring)(Low Ratio)(Sonnax) 1983-Up	1	84754-14K
S84741SA-1	Valve, 440-T4/4T60E 1-2 Shift (Sonnax) 1983-Up	1	84754-23K
S84741SB-1	Valve, 4T60E 2-3 Shift (Anodized) 1994-97 (Sonnax)	1	
S84741SC-1	Valve, 4T60E 3-4 Shift (Anodized) 1994-97 (Sonnax)	1	
84741T-4	Retainer, 440-T4 Boost Valve 1983-Up	1	8656410

© Whatever It Takes Transmission Parts. Inc.

PART #	HARD PARTS (Continued)	QTY.	REFERENCE #
S84741T-4K	Retaining Clip Set, 440-T4/4T60E/4T65E Forward & Reverse Servo Boost Valve Retainer Roll Pins (10 Per Set) (Sonnax)	1	
84746	Plate, 440-T4 Accumulator Cover to Case 1983-91	1	8649476
84746A	Plate, 4T60E Accumulator Cover to Case 1991-Up	1	8682085
84746G	Plate, 4T65E Accumulator Cover to Case 1997-Up	1	
84747A	Plate, 440-T4 Valve Body 1983-E85	1	24201637
84747B	Plate, 440-T4 Valve Body (W/2 Piece Type TCC Regulator Valve) L1985-91	1	24201630
84747C	Plate, 440-T4 Valve Body (W/1 Piece Type TCC Regulator Valve) L1985-90	1	8658871
84747G	Plate, 4T65E Valve Body (With Bonded Gaskets) 1997-03	1	24209401
84747GA	Plate, 4T65E Valve Body (With Bonded Gaskets) 2004-08 (Will Not Work On Paddle Shift Units)(Contains: 2nd Design Plate, Valve, Clips & Bosch O-Rings)	1	
84747GB	Plate, 4T65E Valve Body (W/Bonded Gasket) 2004-Up (For Units With Paddle Shift Only)(Also Includes 1 Temperature Sensor Valve & Two Bosch PCS O-Rings)(2nd Design)	1	
84755	Channel Plate, 440-T4 (Cast # 027) 1983-E85	1	
84755BA	Channel Plate, 440-T4 (Cast # 827)(No Switch) L1985-87 (Can Use 84755CA)	1	
84755BB	Channel Plate, 440-T4 (Cast # 827)(W/1 Switch) L1985-87	1	
84755CA	Channel Plate, 440-T4 (Cast # 423)(No Switch) 1988-91 (Can Use 84755BA)	1	8668995
84755CB	Channel Plate, 440-T4 (Cast # 423)(W/1 Switch) L1988-91	1	
84755DA	Channel Plate, 440-T4 (Cast # 971)(No Switch) 1988-91	1	
84755E	Channel Plate, 440-T4 (Cast # 208)(No Switch) 1988-91	1	
84755EA	Channel Plate, 440-T4 (Cast # 733)(No Switch) 1989	1	
84755GA	Channel Plate, 4T60E (Cast # 284)(No Switch) 1990	1	
84755H	Channel Plate, 4T60E 1991-92	1	
84755HA	Channel Plate, 4T60E (Cast # 217)(No Switch) 1993-94 (Does Not Use A TCC Piston)	1	
84755HAK	Channel Plate Assembly, 4T60E (Cast # 217) (Contains; # 84740 & 84500) 1993-94	1	
84755HB	Channel Plate, 4T60E (Cast # 217) (No Switch) 1993-94 (Uses A TCC Piston)	1	
84755HC	Channel Plate, 4T60E (Cast # 353) 1993-94	1	
84755J	Channel Plate, 4T60E (Cast # 594)(No Switch)	1	
84755JA	Channel Plate, 4T60E (Cast # 656)(W/Pan Bolt Studs) 1994	1	
84755JB	Channel Plate, 4T60E (Cast # 657)(No Pan Bolt Studs)(No TCC Piston)	1	
84755JC	Channel Plate, 4T60E (Cast # 657)(No Pan Bolt Studs)(W/TCC Piston)	1	
84755JD	Channel Plate, 4T60E (Cast # 656)(No Pan Bolt Studs)(W/TCC Piston)	1	
84755JE	Channel Plate, 4T60E (Cast # 656)(No Pan Bolt Studs)(No TCC Piston)	1	
84755L	Channel Plate, 4T60E (Cast # 760)	1	
84755N	Channel Plate, 4T65E (Cast # 038) 1997-Up (Must Use Their Manual Valve)	1	
84755P	Channel Plate, 4T65E (Cast # 496)(W/Axle Stabilizer Bore) 1997-Up (Must Use Their Manual Valve)	1	
84755Q	Channel Plate, 4T65E (Cast # 900) (Must Use Their Manual Valve)(Has No Check Ball In The Cooler Line Fitting) 2004-Up (With S84755-1FK Installed)	1	
84755QA	Channel Plate, 4T65E (Cast # 900) (Must Use Their Manual Valve)(Has A Check Ball In The Cooler Line Fitting) 1997-Up (With S84755-1FL Installed)	1	
84755R	Channel Plate, 4T65E (Cast # 403) 1997-Up (Must Use Their Manual Valve)	1	
84755RA	Channel Plate, 4T65E (Cast # 896) 2004-Up (Must Use Their Manual Valve)(Has No Check Ball In The Cooler Line Fitting) (With S84755-1FK Installed)	1	
84755RAA	Channel Plate, 4T65E (Cast # 896) 1997-Up (Must Use Their Manual Valve)(Has A Check Ball In The Cooler Line Fitting) (With S84755-1FK Installed)	1	
84755RAG	Channel Plate, 4T65E (Cast # 897)(Must Use Their Manual Valve)(Has 2 Check Balls In The Cooler Line Fitting) 1997-Up (With S84755-1FK Installed)	1	
84755RB	Channel Plate, 4T65E (Cast # 086) 2004-Up (Must Use Their Manual Valve)(With 1 Blow Off Check Ball)(With S84755-1FK Installed)	1	
84755RC	Channel Plate, 4T65E (Cast # 086 or 721) 2004-Up (Must Use Their Manual Valve) (With 2 Blow Off Check Balls) (With S84755-1FK Installed)	1	
84755RD	Channel Plate, 4T65E (Cast # 720) 2004-Up (Must Use Their Manual Valve)(With 2 Blow Off Check Balls)(With S84755-1FK Installed)	1	
T84755-1FK	Valve Kit, Actiuator Feed Limit Valve Repair (Drop-in - No Tooling) TransGo	1	
84755S	Sleeve, 440-T4/4T60E (Presses in Channel Plate) 1983-Up	1	8656077
84755SE	Sleeve, 4T65E (Presses in Channel Plate) 1997-Up	1	
S84755-1FK	Actuator Feed Limit Valve Kit, 4T65E (In Case Cover)(Valve Sleeve & 2 Springs)(Sonnax) (Use T-F-84596-TL)	1	
T-F-84596-TL	Reamer Set, For The S84741GDK & S84741-1FK (Sonnax)	1	
S84755-1G	Valve, 4T65E Converter Relief (In Channel Plate) (Sonnax)	1	
84755V-4	Retainer, 440-T4 3-2 Line Control Valve 1983-Up	1	8658678
84755VA-3	Spring, 440-T4 3-2 Down Shift Valve 1983-Up	1	8656076
84755VA-4	Retainer, 440-T4 3-2 Control Valve 1983-Up	1	8658276
84755VA-6	Plug, 440-T4 3-2 Line Control Valve 1983-Up	1	8656881
84755VB-1	Valve, 440-T4 3-2 Line Control Valve 1983-Up	1	8658676
84755VB-3	Spring, 440-T4 3-2 Line Control Valve 1983-Up	1	8658470
84755VM-4	Retainer, 440-T4 Manual Valve to Link 1983-Up	1	8656787

© Whatever It Takes Transmission Parts. Inc.

84760	Case, 440-T4 1983-E85	1	
84760A	Case, 440-T4 (W/2 Round Threaded Bosses on Top of Case) L1985-91	1	8662928
84760AA	Case, 440-T4 (W/Out Round Bosses on Top of Case) 1991-92	1	
84760B	Case, 440-T4 (W/Out Round Bosses on Top of Case) L1985-91	1	
84760C	Case, 4T60E Square Top (W/2 Round Threaded Bosses on Top of Case)(Uses 8mm Pan Bolt Heads) 1991-Up	1	
84760CA	Case, 4T60E Square Top (With 2 Round Threaded Bosses On Top Of Case)(Uses 10mm Pan Bolt Heads) 1991-Up	1	
84760CB	Case, 4T60E Round Top (Quad 4) 1991-Up	1	
84760D	Case, 4T65E (Cast # 24204411 or 24208026) 1997-Up (Has A Screw-In Compression Cooler Line Fittings Under Bell With No Check Ball)	1	
84760D-1	Case, 4T65E (CAst # 24204411 Or # 24208026) 1997-Up (Has Press-In Cooler Line Fittings Under Bell, With No Check Ball)	1	
84760DA	Case, 4T65E (Cast # 24209508) (Has Cooler Line Fittings Under Bell With No Check Ball) 1997-Up	1	
84760DAA	Case, 4T65E (Cast # 24209508) (Has Cooler Line Fittings Under Bell With Check Ball) 1997-Up	1	
84760DB	Case, 4T65E (Cast # 24208026) (Has Cooler Line Fittings Under Bell With Check Ball) 1997-Up	1	
84760DC	Case, 4T65E (Cast # 24226969) 1997-Up (Has Cooler Line Fittings Under Bell With No Check Ball)	1	
84760E	Case, 4T65E (Cast # 24208834) (Quad 4) 1997-Up	1	
84760EA	Case, 4T65E (3.7L AWD)(Cast # 24220055) 2007-Up	1	
84760F	Case, 4T65E (Volvo) (Top Bolts Are 4 7/8") (Starter At 2:00) 1997-Up	1	

PART #	CASE COMPONENTS	QTY.	REFERENCE #
T64275	Axle Stabilizer, 440-T4/4T60E Passenger Side (W/Bearing & Seal) 1983-Up (Teckpak)	1	
T84275	Axle Stabilizer, 440-T4/4T60E Driver Side (W/Bearing & Seal) 1983-Up (Teckpak)	1	
84921	Band Stop, 440-T4 1-2 Band (Plastic) 1983-Up	1	8649302

PART #	HARD PARTS (Continued)	QTY.	REFERENCE #
84765	Pan, 440-T4 Bottom 1983-91	1	8662942
84765A	Pan, 4T60E Bottom (Uses Bolts With 13mm Heads) 1991-Up	1	8641914
84765G	Pan, 4T60E/4T65E Bottom (Uses Bolts With 10mm Heads) 1997-Up	1	
84766	Pan, 440-T4 Side Cover (Tin) 1983-91	1	8651472
84766B	Pan, 4T60E Side Cover (Aluminum, W/4 Threaded Holes) 1991-Up	1	8685537
84766BA	Pan, 4T60E Side Cover (Aluminum, W/6 Threaded Holes) 1991-Up	1	
84766C	Pan, 4T65E Side Cover (Aluminum, W/6 Threaded Holes) (Cast # 24211956 or 24203988) 1997-Up	1	
84766CA	Pan, 4T65E Side Cover (Aluminum) (Volvo Style) (Cast # 24211926) 1997-Up	1	
S84766P	Side Cover Plate, 440-T4 (Repairs Inner Gasket Leaks on Side Cover) (Sonnax) 1983-Up	1	84995-01
84770	Extension Housing, 4T60E/4T65E (Bushing Type) 1991-Up	1	8651908
84770A	Extension Housing, 4T60E/4T65E (Bushing Type)(Has 2 Threaded Bosses Opposite The Speed-O Gear)	1	
84770G	Extension Housing, 4T60E/4T65E (Bearing Type)(1 1/2"ID Of Bearing) 1996-Up	1	
84770GA	Extension Housing, 4T60E/4T65E (Bearing Type)(5 1/4" Long)(2 1/2"ID Of Bearing)1996-Up	1	
84770GB	Extention Housing, 4T60E/4T65E (Bearing Type)(5 1/4" Long)(2 1/2" ID Of Bearing) 1996-Up (With 2 Threaded Bosses)	1	
64774	Housing, 440-T4 Driven Speed-O Gear 1983-Up	1	25519848
64775	Bolt, 440-T4/4T60E Converter (Metric) 1983-Up	3	
84777K	Bolt Set, 440-T4 Pump to Valve Body 1983-91	1	
84777GK	Bolt Set, 4T65E Pump to Valve Body 1997-Up (11 Per Set)	1	
84778K	Bolt Set, 440-T4/4T60E Converter Reactor to Case 1983-Up (4 Per Set)	1	
84779K	Bolt Set, 440-T4 Bottom Pan to Case 1983-91 (19 Per Set)	1	
84779EK	Bolt Set, 4T60E Bottom Pan to Case (8mm Thread OD)(13mm Bolt Head)(20 Pieces) 1991-Up	1	
84779GK	Bolt Set, 4T65E Bottom Pan to Case (6mm Thread OD)(10mm Bolt Head)(20 Pieces) 1997-Up	1	
84780A	Bolt, 440-T4 Channel Plate to Driven Sprocket Support (W/Oil Groove) 1983-Up	1	8658294
84780GK	Bolt Set, 4T65W Channel Plate To Driven Sprocket Support (10mm x 2.180"Long)(3 Pieces)	1	
84781K	Bolt Set, 4T60E/4T65E Extension Housing to Case 1991-Up (4 Per Set)	1	
84782GK	Bolt Set, 4T65E Valve Body to Channel Plate 1997-Up (15 Per Set)	1	
84784AK	Bolt Set, 4T60E/4T65E 2-1 Servo 1992-Up (3 Per Set)	1	
84788K	Bolt Set. 440-T4 Side Pan to Channel Plate 1983-91 (17 Per Set)	1	
84788AK	Bolt Set, 4T60E Side Pan To Channel Plate 1992-Up	1	
84788NK	Nut Set. 440-T4 Side Pan to Channel Plate 1983-91 (6 Per Set)	1	
84791K	Bolt Set. 440-T4 Oil Scoop to Case 1983-91	1	
84792K	Bolt Set. 440-T4 Accumulator Cover to Case 1983-91	1	
34797B	Nut, 440-T4/4T60E/4T65E Holds External Shift Lever on (Metric) 1983-Up	1	

© Whatever It Takes Transmission Parts. Inc.

PART #	HARD PARTS (Continued)	QTY.	REFERENCE #
84843	Bracket, 440-T4 Modulator 1983-91	1	8627650
84843A	Clip, 440-T4 Internal Wire Harness 1983-91	1	8668271
84845G	Reluctor Wheel, 4T65E Input Speed Sensor Pick-Up	1	
64847	Gear, 440-T4 Speed-O Drive (10 Teeth, Green) 1983-Up	1	
64848D	Gear, 440-T4 Speed-O Driven (27 Teeth, Black) 1983-Up	1	
64848E	Gear, 440-T4 Speed-O Driven (28 Teeth, Yellow) 1983-Up	1	
84854	Cushion Spacer, 440-T4 Reverse Servo 1983-Up	1	8656287
84862	Snap Ring, 440-T4/4T60E Holds 4th Clutch Retainer (3 5/16"OD) 1983-Up	1	8644068
84862G	Snap Ring, 4T65E Holds 4th Clutch Retainer (3 9/16"OD) 1997-Up	1	
84873	Snap Ring, 440-T4 Holds 2nd Clutch Beveled Pressure Plate in 1983-86	1	8661141
84873A	Snap Ring, 440-T4 Holds 2nd Clutch Beveled Pressure Plate in (W/Eye Ends) 1987-89	1	
84873B	Snap Ring, 440-T4/4T60E Holds 2nd Clutch Beveled Pressure Plate in (.060") 1990-Up	1	8668567
84873G	Snap Ring, 4T65E Holds 2nd Clutch Beveled Pressure Plate in (.090") 1997-Up	1	
84874	Snap Ring, 440-T4/4T60E Holds 2nd Clutch Retainer (5 5/8"OD) 1983-Up	1	8644110
84874G	Snap Ring, 4T65E Holds 2nd Clutch Retainer (3 1/4"OD) 1997-Up	1	
84876	Snap Ring, 440-T4/4T60E/4T65E Holds Input Clutch Pressure Plate in 1983-Up	1	8652055
84877	Snap Ring, 440-T4/4T60E/4T65E Input Housing to 3rd Clutch Housing 1983-Up	1	8644726
84878	Snap Ring, 440-T4/4T60E/4T65E Holds 3rd Clutch Pressure Plate in 1983-Up	1	8644165
84879	Snap Ring, 440-T4/4T60E/4T65E Holds 3rd Clutch Pressure Retainer (Use 84877)	1	
64880	Snap Ring, 440-T4/4T60E/4T65E Holds Drive Gear to Turbine Shaft 1983-Up	1	8631210
84881	Snap Ring, 440-T4/4T60E Holds Input Sprag in Outer Race 1983-E93	2	8658889
84881A	Snap Ring, 4T60E/4T65E Holds Input Sprag in Outer Race (Spiral) L1993-Up	2	
84884	Snap Ring, 4T60E Holds 1-2 Sprag in 1991-Up	1	5606009
44887	Snap Ring, 440-T4 Holds Seal to Speed-O Housing 1983-91	1	
84887	Snap Ring, 440-T4/4T60E/4T65E Holds Reverse & 1-2 Servo in 1983-Up	1	8644091
84888	Snap Ring, 440-T4/4T60E/4T65E Holds Pinion Pins in Diff. Housing (Use 76874A)	1	
76874A	Snap Ring, 440-T4/4T60E/4T65E Holds Pinion Pins in Diff. Housing (Spiral) 1983-Up	1	
84889	Snap Ring, 440-T4/4T60E/4T65E Holds Differential Ring Gear to Case 1983-Up	1	8631078
14895A	Snap Ring, 4T60E/4T65E Output Shaft (Long, Internal) Square 1995-Up	1	
84895	Snap Ring, 440-T4/4T60E Output Shaft to Differential (Flat)1983-Up	1	8631136
84896	Snap Ring, 440-T4/4T60E/4T65E Holds Reverse & 1-2 Servo In 1983-Up	1	
84897P	Snap Ring Clip, 440-T4/4T60E Holds Servo Pin to Piston 1983-Up	1	8656727
84900	Servo Assembly, 4T60E/4T65E Manual 2-1 (Forward) 1991-Up	1	8651939
84901	Spring, 4T60E/4T65E Manual 2-1 (Forward) 1991-Up	1	8651544
84902	Piston, 4T60E/4T65E Manual 2-1 (Forward) 1991-Up	1	8651547
84904	Housing, 4T60E/4T65E Manual 2-1 (Forward) 1991-Up	1	8651917
84904C	Cover, 4T60E/4T65E Manual 2-1 Servo (Forward) 1991-Up	1	
84905	Servo Assembly, 440-T4 1-2 Servo (Cover Uses A Snap Ring) 1983-91	1	
84905E	Servo Assembly, 4T60E 1-2 Servo (3 Bolt Cover W/O-Ring Groove) 1991-Up	1	
84905G	Servo Assembly, 4T65E 1-2 Servo (Lathe Cut Seal Type Cover) 1997-Up	1	
84906B	Spring, 440-T4 1-2 Servo Cushion (1st Design)(Orange/Green)(Inner) 1985-91	1	8668123
84906C	Spring, 440-T4 1-2 Servo Cushion (2nd Design)(Orange/Blue)(Inner) 1985-91	1	8675078
84906D	Spring, 440-T4 1-2 Servo Cushion (Green)(Inner) 1985-91	1	8646456
84906G	Spring, 4T65E 1-2 Servo Cushion (.215" Coil Diameter) 1997-Up	1	
84907	Piston, 440-T4 1-2 Servo 1.180" Tall) (.440"ID) 1983-91	1	8646921
84907E	Piston, 4T60E 1-2 Servo (1.180" Tall) (.555"ID) 1991-Up	1	
84907G	Piston, 4T65E 1-2 Servo .980" Tall (.555"ID) 1997-Up	1	
S84907K	Piston Kit, 440-T4/4T60E 1-2 Servo (Contains; Piston, Sleeve, Spacer, & Seal) (No Machining Required) (Sonnax)	1	
T84908	Pin, 440-T4 1-2 & Reverse Servo (Extendo)(Teckpak) 1983-91	1	84572E
84908	Pin, 440-T4 1-2 Servo 2.215" (1 Ring & 1 Wide Band) 1983-91	1	8656537
84908A	Pin, 440-T4 1-2 Servo 2.255" (1 Ring) 1983-91	1	8656539
84908B	Pin, 440-T4 1-2 Servo 2.295" (2 Ring) 1983-91	1	8656540
84908C	Pin, 440-T4 1-2 Servo 2.335" (3 Ring) 1983-91	1	8656541
84908D	Pin, 440-T4 1-2 Servo 2.375" (1 Wide Band) 1983-91	1	8656542
84908E	Pin, 440-T4 1-2 Servo 2.415" (2 Ring & 1 Wide Band) 1983-91	1	8656538
S84908G	Pin Kit, 4T60E/4T65E Forward Servo Band (Extended Length)(Contains Servo Pin & PTFE Pin Seals)(Sonnax)	1	
84908U	Pin, 440-T4 1-2 (Universal) 1983-91	1	
84909	Cover, 440-T4 1-2 & Reverse Servo 1983-91	1	8656530
84909B	Cover, 4T60E 1-2 Servo (3 Bolt W/O-Ring Groove) 1991-Up	1	8651916
84909G	Cover, 4T65E 1-2 Servo (Lathe Cut Seal Type) 1997-Up	2	
84910	Servo Assembly, 440-T4 Reverse Servo 1983-91	1	
84910E	Servo Assembly, 4T60E Reverse Servo (Cover is 1 1/4" Overall Thickness) 1991-Up	1	
84910G	Servo Assembly, 4T65E Reverse Servo (Cover is 3/4" Overall Thickness) 1997-Up	1	
84911	Spring, 440-T4/4T60E Reverse Servo (Large) 1983-95	1	8649147
84911A	Spring, 4T60E/4T65E Reverse Servo (Large) 1996-Up	1	24202538
84911C	Spring, 440-T4/4T60E Reverse Servo (Small) 1983-95	1	8668121

© Whatever It Takes Transmission Parts. Inc.

84912	Piston, 440-T4/4T60E Reverse Servo 1983-Up	1	8648922
84913	Pin, 440-T4 Reverse Servo Apply 2.790" (2 Wide Bands) 1983-Up	1	8658239
84913A	Pin, 440-T4 Reverse Servo Apply 2.835" (3 Grooves & 1 Wide Band) 1983-Up	1	8658240
84913B	Pin, 440-T4 Reverse Servo Apply 2.875" (2 Grooves & 1 Wide Band) 1983-Up	1	8658241
84913C	Pin, 440-T4 Reverse Servo Apply 2.915" (1 Groove & 1 Wide Band) 1983-Up	1	8658243
84913D	Pin, 440-T4 Reverse Servo Apply 2.955" (No Groove) 1983-Up	1	8658245
84913E	Pin, 440-T4 Reverse Servo Apply 2.995" (1 Groove) 1983-Up	1	8658246
84913EA	Pin, 440-T4 Reverse Servo Apply 3.040" (2 Groove) 1983-Up	1	8658247
84913G	Pin, 440-T4 Reverse Servo Apply 3.080" (3 Groove) 1983-Up	1	8658248
84913H	Pin, 440-T4 Reverse Servo Apply 3.120" (4 Groove) 1983-Up	1	8658244
84913U	Pin, 440-T4 Reverse Servo Apply (Universal) 1983-Up	1	
84913W	Pin, 4T60E/4T65E Reverse Servo Apply 4.735" Long 1991-Up	1	
84914	Cover, 440-T4 Reverse Servo (Use 84909) 1983-91	1	8656530
84914A	Cover, 4T60E Reverse Servo (1 1/4" Overall Thickness) 1991-Up	1	
84914G	Cover, 4T65E Reverse Servo (3/4" Overall Thickness) 1997-Up	1	
84917G-3	Anchor, 4T65E Reverse & Forward Band 1997-Up	1-2	
84925	Accumulator Assembly, 440-T4/4T60E 1-2 & 2-3 (1 Spring Type) 1983-Up	1-2	
84925B	Accumulator Assembly, 4T60E 1-2 (2 Springs on 1 side)(7/8" Thick Piston) 1991-Up	1	
84925C	Accumulator Assembly, 4T60E 2-3 (2 Springs on 1 side)(1" Thick Piston) 1991-Up	1	
84925D	Accumulator Assembly, 4T60E 1-2 (1 Spring Each Side)(.308"OD Pin) Some 95-Up	1	
84925G	Accumulator Assembly, 4T65E 1-2 (1 Spring Each Side)(.235"OD Pin) 1997-Up	1	
84926	Spring, 440-T4/4T60E 1-2 Accumulator (Green) 1983-Up	1	8668487
84926A	Spring, 440-T4 1-2 Accumulator (Pink/White) 1983-Up	1	8668484
84926B	Spring, 440-T4/4T60E 1-2 Accumulator (Orange) 1983-Up	1	8649091
84926C	Spring, 440-T4 1-2 Accumulator (Blue) 1983-Up	1	8649092
84926D	Spring, 440-T4 1-2 Accumulator (Red) 1983-Up	1	8646400
84926E	Spring, 440-T4 1-2 Accumulator (Outer)(Pink) 1991-Up	1	8679540
84927A	Piston, 440-T4/4T60E 1-2 & 2-3 Accumulator (1 Spring Type) 1983-Up (Also Fits Later Models Using 2 Springs on 1 Side)(7/8" Thick)	1	8651927
84927AK	Piston Kit, 4T60E 1-2 & 2-3 Accumulator (2 Pistons, Spring & Spacer)(.308"OD Pin) 1991-Up (Transgo)	1	
84927C	Piston, 4T60E 1-2 & 2-3 Accumulator (2 Springs on 1 Side)(1" Thick) 1991-Up	1	
84927D	Piston, 4T60E 1-2 & 2-3 Accumulator (1 Spring Each Side)(.308"OD Pin) Some 95-Up	1	
84927E	Piston, 4T65E 1-2 & 2-3 Accumulator (1 Spring Each Side)(.235"OD Pin) 1997-Up	1	
84928	Pin, 440-T4/4T60E 1-2 & 2-3 Accumulator (.308"OD) 1983-Up	1	8644298
84928E	Pin, 4T65E 1-2 & 2-3 Accumulator (.235"OD) 1997-Up	1	
S84928GX	Pin, 4T65 1-2 & 2-3 Accumulator (Oversized)(4 Per Pack)(Sonnax)	1	
S84928GXK	Pin & Reamer Kit, 4T65E Accumulator (Oversized)(Sonnax) 1997-Up (With 10 Pins & Reamer)	1	
S84928X	Pin, 440-T4/4T60E 1-2 & 2-3 Accumulator (Oversized)(4 Per Pack)(Sonnax) 1983-Up	1	84573-01K
S84928XK	Pin & Reamer Kit, 440-T4/4T60E 1-2 & 2-3 Accumulator (Oversized)(Sonnax) 1983-Up	1	84573-02K
84929	Housing, 440-T4/4T60E 1-2 & 2-3 Accumulator (Cast # 8677163) 1983-Up	1	8656740
84929G	Housing, 4T65E 1-2 & 2-3 Accumulator (Cast # 24203536) 1997-Up	1	
84930	Accumulator Assembly, 440-T4/4T60E 2-3 (Use 84925) 1983-Up	1	
84930G	Accumulator Assembly, 4T65E 2-3 (Use 84925) 1997-Up	1	
84931	Spring, 440-T4/4T60E 2-3 Accumulator (Blue) 1983-Up	1	
84932	Piston, 440-T4/4T60E 2-3 Accumulator (Use 84927) 1983-Up	1	
84932G	Piston, 4T65E 2-3 Accumulator (Use 84927) 1997-Up	1	
84934	Cover, 440-T4 1-2 & 2-3 Accumulator (W/Tubes) 1983-90	1	
84934-1	Tube, 440-T4 Governor Feed (Short) 1983-Up	1	8656381
84934-2	Tube, 440-T4 Governor Feed (Long) 1983-Up	1	8656380
84934B	Cover, 4T60E 1-2 & 2-3 Accumulator (W/Tubes)(Cast # 8651533) 1991-Up	1	8662985
84934BK	Cover Assembly, 4T60E 1-2 & 2-3 Accumulator (Contains: Cover, Springs, Oversized Pins, Pistons, New O-Rings, Gasket & Housing) Without Tubes (#934 Cast # 8677163) 1991-Up (Ready To Install)	1	
84934G	Cover, 4T65E 1-2 & 2-3 Accumulator (W/Tubes)(Cast # 24205584) 1997-Up	1	
84934GK	Cover Assembly, 4T65E 1-2 & 2-3 Accumulator (Contains: Cover, Springs, Oversized Pins, Pistons, New O-Rings, Gasket & Housing) Without Tubes (#934 Cast # 24203536) 1997-Up (Ready To Install)	1	
84935	Accumulator Assembly, 440-T4 Input (W/Steel Piston) 1983-Up	1	
84935E	Accumulator Assembly, 4T60E 3-4 (W/2" Tall Cover) 1991-Up	1	
84935G	Accumulator Assembly, 4T65E 3-4 (W/1 3/4"" Tall Cover) 1997-Up	1	
84936	Spring, 440-T4 Input Accumulator (Outer, Orange) 1985-91	1	8646399
84936B	Spring, 4T60E 3-4 Accumulator (Outer) 1991-Up	1	8651594
84936BG	Spring, 4T65E 3-4 Accumulator (Outer, Yellow) 1997-Up	1	
84936C	Spring, 4T60E 3-4 Accumulator (Inner) 1991-Up	1	8651595
84936CG	Spring, 4T65E 3-4 Accumulator (Inner, Yellow) 1997-Up	1	
84937	Piston, 440-T4 Input Accumulator (Steel) 1983-Up	1	
84937E	Piston, 4T60E 3-4 Accumulator (Aluminum)(1.710"OD) 1991-Up	1	
84937G	Piston, 4T65E 3-4 Accumulator (Aluminum)(1.770"OD) 1997-Up	1	
84938	Pin, 440-T4 Input Accumulator 1983-Up	1	

© Whatever It Takes Transmission Parts. Inc.

PART #	HARD PARTS (Continued)	QTY.	REFERENCE #
84938E	Pin, 4T60E 3-4 Accumulator (1 3/4" Long) 1991-Up	1	8682271
84938G	Pin, 4T65E 3-4 Accumulator (1 5/8" Long) 1997-Up	1	
84939	Canister, 4T60E 3-4 Accumulator Piston (2" Tall) 1991-Up	1	8651468
84939G	Canister, 4T65E 3-4 Accumulator Piston (1 3/4" Tall) 1997-Up	1	
84940A	Accumulator Assembly, 440-T4/4T60E TCC 1983-Up	1	8646926
84941	Spring, 440-T4/4T60E TCC Accumulator 1983-Up	1	8656097
84942A	Piston, 440-T4/4T60E TCC Accumulator 1983-Up	1	
84943	Pin, 440-T4/4T60E TCC Accumulator 1983-Up	1	8656730
84945	Accumulator Assembly, 440-T4 Input (W/Steel Piston) 1983-91	1	
84960	Piston, 440-T4 4th Clutch 2.190" Tall (1st Design) 1983-85	1	8644063
84960A	Piston, 440-T4/4T60E/4T65E 4th Clutch 2" Tall 1986-Up	1	8661014
84962	Piston, 440-T4 2nd Clutch 1983-91	1	24204370
84962E	Piston, 4T60E 2nd Clutch (5 1/8"OD)(W/Bonded Rubber) 1991-Up	1	24201154
84962G	Piston, 4T65E 2nd Clutch (5 3/8"OD)(W/Bonded Rubber) 1997-Up	1	24208336
84964	Piston, 440-T4/4T60E Input Clutch (For 8 Clutches on 3rd Clutch) 1983-91	1	8668295
84964B	Piston, 4T60E/4T65E Input Clutch (For 10 Clutches on 3rd Clutch) 1991-Up	1	
84965	Piston, 440-T4 3rd Clutch 1983-91	1	8646924
84965A	Piston, 4T60E 3rd Clutch (Bonded)(W/Check Ball) 1991-96	1	8682736
84965G	Piston, 4T60E/4T65E 3rd Clutch (Bonded)(No Check Ball) 1997-Up	1	
84970	Retainer W/Springs, 440-T4/4T60E 4th Clutch (3 3/8"OD) 1983-Up	1	8661081
84970G	Retainer W/Springs, 4T65E 4th Clutch (3 5/8"OD) 1997-Up	1	
84972	Retainer W/Springs, 440-T4 2nd Clutch 1983-86	1	8644109
84972A	Retainer W/Springs, 440-T4 2nd Clutch 1987-91	1	8668534
84972B	Retainer W/Springs, 4T60E 2nd Clutch (13/16" Tall) 1991-Up	1	8675319
84972G	Retainer W/Springs, 4T65E 2nd Clutch (1 7/16" Tall) 1997-Up	1	
84974	Retainer W/Springs, 440-T4/4T60E Input Clutch (W/16 Springs) 1983-Up	1	8644151
84974G	Retainer W/Springs, 4T65E Input Clutch (W/14 Springs) 1997-Up	1	
84975	Guide Retainer W/Springs, 440-T4/4T60E 3rd Clutch (W/12 Springs) 1983-Up	1	8668071
84975G	Guide Retainer W/Springs, 4T65E 3rd Clutch (W/18 Springs) 1997-Up	1	
84980	Spacer, 4T60E 1-2 Sprag to Drum 1991-Up	1	
84985	Housing, 440-T4 3rd Clutch 1983-88	1	8656310
84985A	Housing, 440-T4/4T60E 3rd Clutch (For Bonded Piston)(No Check Valve) 1989-Up	1	8668359
84985G	Housing, 4T65E 3rd Clutch (W/Check Valve) 1997-Up	1	
84989	Retainer, 440-T4 Input Sprag Clutch 1983-86	1	8644044
84989A	Retainer, 440-T4/4T60E Input Sprag Clutch 1987-93	1	8658796
84991	Linkage Assembly, 440-T4 Internal (13 1/4" Park Rod) (Does Not Include # 991-7)	1	
84991A	Linkage Assembly, 440-T4/4T60E Internal (13 3/4" Park Rod) L1990-Up (Does Not Include # 991-7)	1	
84991B	Linkage Assembly, 4T60E/4T65E Internal (15 1/2" Park Rod) 1991-E98 (Does Not Include # 991-7)	1	
84991G	Linkage Assembly, 4T65E Internal (15 1/2" Park Rod) L1998-Up (Does Not Include # 991-7)	1	
84991-3K	Rooster Comb Kit, 440-T4 Internal (W/Link & Spring) 1983-91	1	8646958
84991B-3K	Rooster Comb Kit, 4T60E/4T65E Internal (W/Link & Spring) 1991-E98	1	8668991
84991-4	Manual Shaft, 440-T4 (Goes Thru Case)(3.570" Long) 1983-87	1	
84991B-4	Manual Shaft, 440-T4 (Goes Thru Case)(3.830" Long) 1988-Up	1	
84993	Link Rod, 440-T4 (Rooster Comb to Manual Valve) 1983-Up	1	8649659
84993A	Link Rod, 4T60E (Rooster Comb to Manual Valve) 1991-Up	1	
84993G	Link Rod, 4T65E (Rooster Comb to Manual Valve) 1997-Up	1	
84994A	Park Rod, 440-T4 (13 1/4" Long, .365"OD of Tip) 1983-91	1	8675223
84994AA	Park Rod, 440-T4/4T60E (13 3/4" Long, .440"OD of Tip) 1984-91	1	
84994B	Park Rod, 4T60E/4T65E (15 1/2" Long, .440"OD of Tip) 1991-Up	1	8675335
84996	Fitting, 440-T4 Cooler Line (Lower)(Short One)(Fits Small Line) 1983-91	1	8656675
84996A	Fitting, 440-T4 Cooler Line (Upper)(W/Check Ball)(Long One)(Fits Small Line) 1983-91	1	
84996AA	Fitting, 4T60E Cooler Line (Upper)(W/Check Ball)(Long One)(Fits Large Line) 1991-Up	1	24202550
84996AB	Fitting, 4T60E/4T65E Cooler Line (Upper)(No Check Ball)(Long One) 1991-Up	1	
84996AC	Fitting, 440-T4 Cooler Line (Lower)(No Check Ball)(Short One)(Fits Small Line) 1983-91	1	
84996B	Fitting, 4T60E/4T65E Cooler Line (Lower)(No Check Ball)(Short One) 1991-Up	1	
84996GA	Fitting, 4T65E Cooler Line (Push In Type)(Metric Thread To Case)(Aluminum)(Short) (.915" Long) 2004-Up	1	
84996GB	Fitting, 4T65E Cooler Line (Push In Type)(Metric Thread To Case)(Aluminum)(Long) (1.312" Long) 2002-Up	1	
84997	Lever & Bracket Assembly, 440-T4 Throttle 1983-91	1	
84997-7	Link, 440-T4 Throttle Cable to Throttle Lever 1983-91	1	8656072
84998	Pipe, 440-T4 2-3 Manuever W/Plate 1987-91	1	8662842
84998B	Pipe, 440-T4 2nd Clutch Signal (on Valve Body)	1	8656071
84999	Tubes, 440-T4/4T60E/4T65E 1-2 Servo 1983-Up	1	
S84999-6	Retainer, 4T60E/4T65E Differential Lube Tube (Sonnax)	1	

© Whatever It Takes Transmission Parts. Inc.

© Whatever It Takes Transmission Parts. Inc.

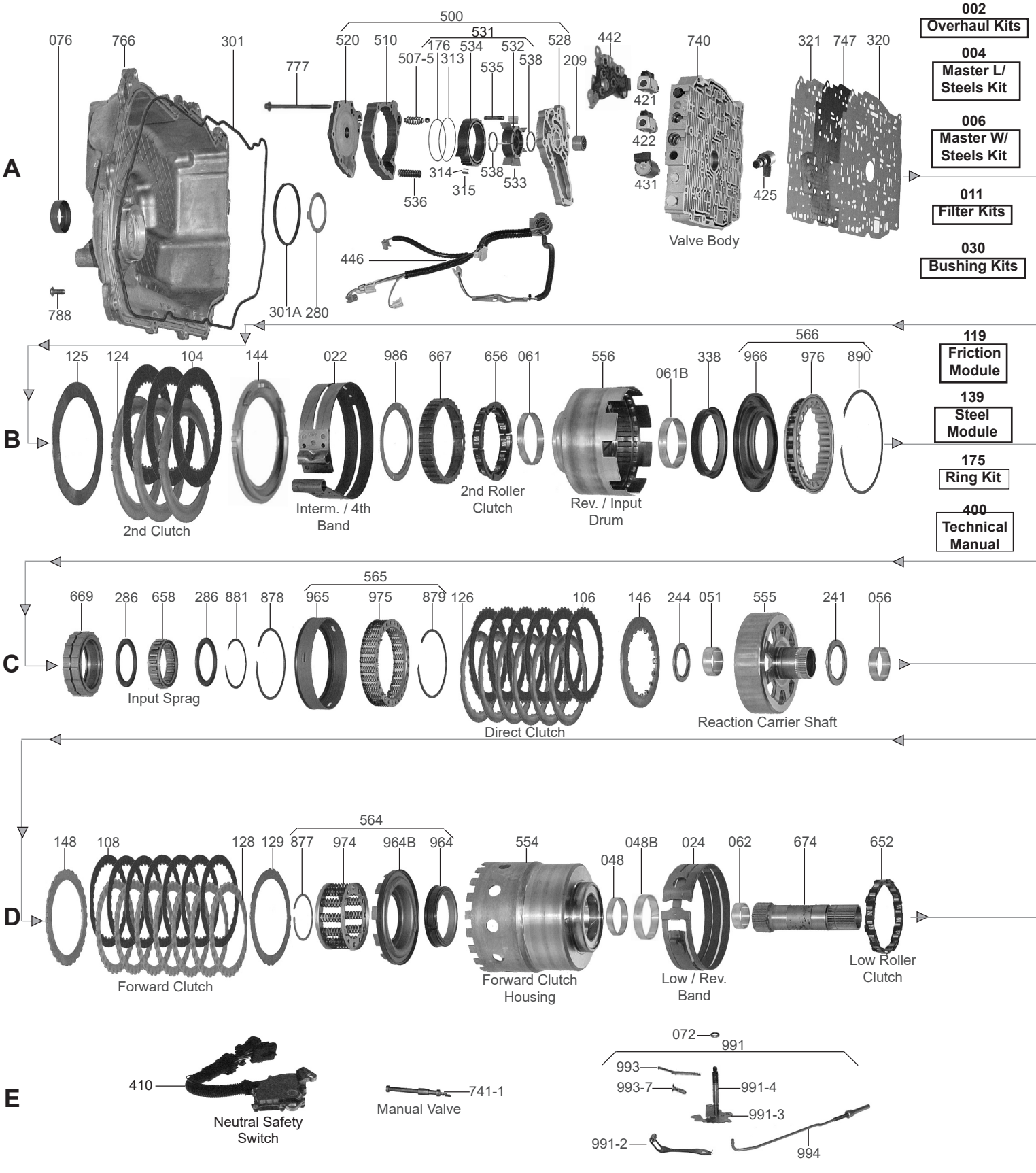

002 Overhaul Kits

004 Master L/ Steels Kit

006 Master W/ Steels Kit

011 Filter Kits

030 Bushing Kits

119 Friction Module

139 Steel Module

175 Ring Kit

400 Technical Manual

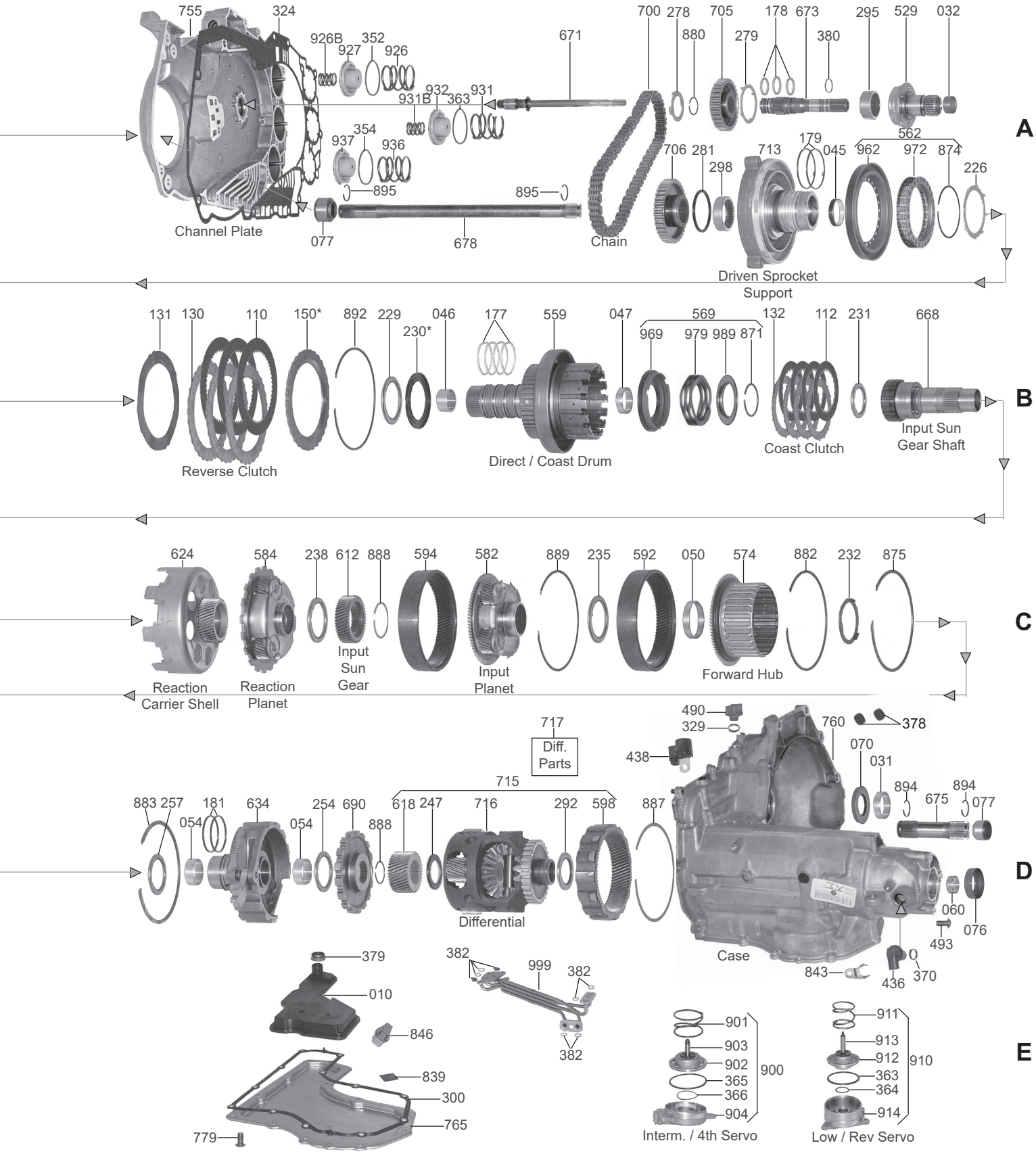

© Whatever It Takes Transmission Parts. Inc.

PART #	PAPER & RUBBER KIT	QTY.	REFERENCE #
14000APW	Paper & Rubber Kit, 4T40E (W/Bonded Pistons) (W/Bonded Rubber Pan Gasket) 1995-Up	1	

PART #	OVERHAUL KIT	QTY.	REFERENCE #
14002AW	Overhaul Kit, 4T40E/4T45E 1995-Up (For Bonded Pistons Sell A14962AK)	1	

PART #	MASTER L/STEEL KIT	QTY.	REFERENCE #
14004AW	Master L/Steels Kit, 4T40E/4T45E 1995-Up (For Bonded Pistons Sell A14962AK)	1	

PART #	MASTER W/STEEL KIT	QTY.	REFERENCE #
14006AW	Master W/Steels Kit, 4T40E/4T45E 1995-Up (For Bonded Pistons Sell A14962AK)	1	

PART #	FILTER	QTY.	REFERENCE #
14010A	Filter, 4T40E 1995-Up	1	24203770

PART #	FILTER KIT	QTY.	REFERENCE #
14011AW	Filter Kit, 4T40E (W/Bonded Rubber Pan Gasket) 1995-Up	1	

PART #	MISC FILTERS	QTY.	REFERENCE #
14016A	Screen, 4T40E Snaps Into Valve Body Seperator Plate 1995-Up	1	
14018A	Filter, 4T40E/4T45E In Valve Body (Round Tube With O-Ring)	1	

PART #	BANDS	QTY.	REFERENCE #
14022A	Band, 4T40E Intermediate/4th 1995-Up	1	
14024A	Band, 4T40E Low/Reverse 1995-Up (Use 84022E)	1	
84022E	Band, 4T40E Low/Reverse 1995-Up	1	8651614

PART #	BUSHINGS	QTY.	REFERENCE #
14030A	Bushing Kit, 4T40E 1995-Up	1	
14032A	Use 54036A	1	
54036A	Bushing, 4T40E Converter Reactor (Front) 1995-Up	1	8628915
14045A	Bushing, 4T40E Driven Sprocket Support (Rear) 1995-Up	1	
14046A	Bushing, 4T40E Direct/Coast Clutch Drum (Front) 1995-Up	1	
14047A	Bushing, 4T40E Direct/Coast Clutch Drum (Rear) 1995-Up	1	
14048A	Bushing, 4T40E Forward Drum (Front, Small One) 1995-Up	1	
14048B	Bushing, 4T40E Forward Drum (Rear, Large One) 1995-Up	1	
14050A	Bushing, 4T40E Forward Clutch Hub 1995-2011	1	
14051A	Bushing, 4T40E Reaction Carrier Shell (Front) 1995-Up (1.530"OD)(1.415"ID)(.550"Wide)	1	
14054A	Bushing, 4T40E Forward Drum Support (Front & Rear) 1995-Up	2	
14056A	Bushing, 4T40E Reaction Carrier Shell (Rear) 1995-Up (1.695"ID)(1.795"OD)	1	
64060	Bushing, 4T40E Case 1995-Up	1	
64060AK	Bushing Set, 4T40E Case (3 Bushings)(Supertuff Teflon Coated)(Superior)	1	
14061A	Bushing, 4T40E Reverse Input Drum (Front) 1995-Up	1	
14061B	Bushing, 4T40E Reverse Input Drum (Rear) 1995-Up	1	
14062A	Bushing, 4T40E Final Drive Sun Gear Shaft (Front) 1995-Up	1	

PART #	METAL CLAD SEALS	QTY.	REFERENCE #
84070	Seal, 4T40E Front Converter 1995-Up	1	8664812
84072A	Seal, 4T40E Manual Shaft (.290" Thick)(.760"OD) 1995-Up	1	
14076A	Seal, 4T40E Axle (Both Sides) 1995-Up	2	
14077A	Seal/Sleeve, 4T40E Axle (Inner)(Both Sides) 1995-Up	2	

PART #	FRICTION CLUTCH	QTY.	REFERENCE #
14104A	Friction, 4T40E 2nd Clutch .070" 1995-Up	3	24209723
14106A	Friction, 4T40E Direct Clutch .070" (W/36 External Teeth) 1995-Up	4-6	24209727
14108A	Friction, 4T40E Forward Clutch .069" (30 Teeth) 1995-Up	7	8684444
14110A	Friction, 4T40E Reverse Clutch .070" 1995-Up	3	
14112A	Friction, 4T40E Coast Clutch .070" 1995-Up	4	8684282
14119A	Friction Module, 4T40E (Hi-Energy) 1995-Up	1	

© Whatever It Takes Transmission Parts. Inc.

14119AHP	Friction Module, 4T40E (Hi-Performance, Blue Plate) 1995-Up	1	
14119AS1	Friction Module, 4T40E (Stage 1) 1995-Up	1	

PART #	STEEL CLUTCH	QTY.	REFERENCE #
14124A	Steel, 4T40E 2nd Clutch .089” (8 Teeth) 1995-Up	3	24200790
14125A	Steel, 4T40E 2nd Clutch (Waved) 1995-Up	1	24200298
14126A	Steel, 4T40E Direct Clutch .074” (W/16 Internal Teeth) 1995-Up	4-6	8685879
14128A	Steel, 4T40E Forward Clutch .069” (30 Teeth) 1995-Up	7	8684445
14129A	Steel, 4T40E Forward Clutch .038” (12 Teeth)(Waved) 1995-Up	1	24200467
14130A	Steel, 4T40E Reverse Clutch .088” (30 Teeth) 1995-Up	3	
14130B	Steel, 4T40E Reverse Clutch .088” (30 Teeth)(Turbulator) 1998-Up	3	
14131A	Steel, 4T40E Reverse Clutch .043” (8 Teeth)(Waved) 1995-Up	1	
14132A	Steel, 4T40E Coast Clutch .069” (12 Teeth) 1995-Up	4	8685874
14139A	Steel Module, 4T40E 1995-Up	1	

PART #	CLUTCH PRESSURE PLATES	QTY.	REFERENCE #
14144A	Pressure Plate, 4T40E 2nd Clutch .251” 1995-Up	1	8684324
14146A	Pressure Plate, 4T40E Direct Clutch .204” (W/16 Internal Teeth) 1995-Up	1	8685875
14148A	Pressure Plate, 4T40E Forward Clutch .122” (30 Teeth) 1995-Up	1	24200595
14150A	Pressure Plate, 4T40E Reverse Clutch (Stamped “A”) 1995-Up	1	
14150B	Pressure Plate, 4T40E Reverse Clutch (Stamped “B”) 1995-Up	1	
14150C	Pressure Plate, 4T40E Reverse Clutch (Stamped “C”) 1995-Up	1	

PART #	OIL SEALING RINGS	QTY.	REFERENCE #
14175AT	Ring Kit, 4T40E (Teflon) 1995-Up	1	
14177AT	Ring, 4T40E Direct/Coast Clutch Drum (Solid)(Teflon) 1995-Up	4	8684272
64178AT	Ring, 4T40E Turbine Shaft (Front)(Solid)(Teflon) 1995-Up	1	8637170
64178BT	Ring, 4T40E Turbine Shaft (Rear)(Solid)(Teflon) 1995-Up	2	8643058
14179AT	Ring, 4T40E Driven Sprocket Support (Vespel)(Teflon) 1995-Up	2	24201613
14181T	Ring, 4T40E Forward Drum Support (Teflon) 1995-Up	2	24204223

PART #	WASHERS & BEARINGS	QTY.	REFERENCE #
14200A	Washer Kit, 4T40E 1995-Up	1	
14201A	Bearing Kit, 4T40E 1995-Up	1	
14209A	Bearing, 4T40E Pump Shaft Needle (With Seal) 1995-Up (1.065”OD) (.705” Wide)	1	
14226A	Washer, 4T40E Driven Sprocket Support to Reverse Input Drum (Plastic, 8 Tab) 1995-Up	1	
14229A	Bearing, 4T40E Driven Sprocket Support to Direct/Coast Drum (Use 84257) 1995-Up	1	8644206
14230A	Washer, 4T40E Driven Sprocket Support to Dir/Coast Drum .061” (Brown, Plastic) 1995-Up	1	
14230B	Washer, 4T40E Driven Sprocket Support to Dir/Coast Drum .072” (Grey, Plastic) 1995-Up	1	
14230C	Washer, 4T40E Driven Sprocket Support to Dir/Coast Drum .084” (Natural, Plastic) 1995-Up	1	
14230D	Washer, 4T40E Driven Sprocket Support to Dir/Coast Drum .096” (Black, Plastic) 1995-Up	1	
14230E	Washer, 4T40E Driven Sprocket Support to Dir/Coast Drum .107” (Orange, Plastic) 1995-Up	1	
14230F	Washer, 4T40E Driven Sprocket Support to Dir/Coast Drum .119” (Violet, Plastic) 1995-Up	1	
14230G	Washer, 4T40E Driven Sprocket Support to Dir/Coast Drum .131” (Yellow, Plastic) 1995-Up	1	
14230H	Washer, 4T40E Driven Sprocket Support to Dir/Coast Drum .142” (Red, Plastic) 1995-Up	1	
14230J	Washer, 4T40E Driven Sprocket Support to Dir/Coast Drum .154” (Green, Plastic) 1995-Up	1	
14231A	Bearing, 4T40E Direct/Coast Clutch Drum to Input Sun Gear Shaft (Front) 1995-Up	1	
14232A	Washer, 4T40E Forward Hub to Forward Drum (Plastic, 3 Tab) 1995-Up	1	
14235A	Bearing, 4T40E Input Planet to Forward Hub (Use 84257) 1995-Up	1	8644206
14238A	Bearing, 4T40E Reaction Planet to Input Sun Gear 1995-Up	1	
14241A	Bearing, 4T40E Reaction Carrier Shaft to Sun Shell 1995-Up	1	
14244A	Bearing, 4T40E Input Sun Gear Shaft to Reaction Carrier Shell (Rear) 1995-Up	1	
54247A	Bearing, 4T40E/4T45E Differential To Sun Gear (2.000”OD) 1995-Up	1	
84247	Bearing, 4T40E/4T45E Differential To Sun Gear (2.191”OD) 1995-Up	1	
84247A	Bearing, 4T40E/4T65E Differential To Sun Gear (2.125”OD)	1	
14254A	Bearing, 4T40E Forward Drum Support To Parking Gear 1995-Up	1	
84257	Bearing, 4T40E Driven Sprocket Support To Direct/Coast Drum & Input Planet to Forward Hub 1995-Up	2	8644206
14257A	Bearing, 4T40E Forward Drum To Support 1995-Up	1	
14275A	Axle Stabilizer, 4T40E/4T45E (Right Side Only)(Teckpak)	1	
14278A	Washer, 4T40E Drive Sprocket To Case Cover (Plastic 4 Tab) 1995-Up (Use 64278A)	1	
64278A	Washer, 4T40E Drive Sprocket To Case Cover 1995-Up	1	
64279A	Washer, 4T40E Drive Sprocket To Support 1995-Up	1	8652841
14280A	Washer, 4T40E Driven Sprocket To Side Cover 1995-Up	1	
14281A	Washer, 4T40E Driven Sprocket To Support 1995-Up	1	8637227
64281A	Washer, 4T40E Driven Sprocket To Support (.153” Thick)	1	
14286A	End Washer, 4T40E Input Sprag (2 Per Sprag) 1995-Up	2	

© Whatever It Takes Transmission Parts. Inc.

PART #	GASKETS & RUBBER COMPONENTS	QTY.	REFERENCE #
64292	Bearing, 4T40E Differential To Case 1995-Up	1	8631362
64295	Caged Needle Bearing, 4T40E Converter Reactor 1995-Up	1	24214158
64298	Caged Needle Bearing, 4T40E Driven Sprocket Support 1995-Up	1	8631190
14300AW	Gasket, 4T40E Bottom Pan (Bonded) 1995-Up	1	
14301A	Seal, 4T40E Side Cover Gasket (Inner)(Molded Rubber) 1995-Up	1	
14301B	Seal, 4T40E Side Cover Gasket (Outer)(Molded Rubber) 1995-Up	1	
14320A	Gasket, 4T40E Valve Body Spacer Plate To Case Cover 1995-03	1	24212642
14320AA	Gasket, 4T40E Valve Body Spacer Plate To Case Cover 2004-05	1	
14320AB	Gasket, 4T40E Valve Body Spacer Plate To Case Cover 2006-Up	1	
14321A	Gasket, 4T40E Valve Body to Spacer Plate 1995-03	1	24207387
14321AA	Gasket, 4T40E Valve Body To Spacer Plate 2004-05	1	
14321AB	Gasket, 4T40E Valve Body To Spacer Plate 2006-Up	1	
14324A	Gasket, 4T40E Case to Case Cover 1995-Up	1	
14338A	Piston, 4T40E Reverse Clutch (Inner)(Bonded)(Not Reusable if Taken Out) 1995-Up	1	
14352A	D-Ring, 4T40E 1-2 Accumulator Piston 1995-Up (Also Fits 2-3 & 3-4 Accumulator)	1-3	
14353A	D-Ring, 4T40E 2-3 Accumulator Piston 1995-Up (Use 14352A)	1	
14354A	D-Ring, 4T40E 3-4 Accumulator Piston 1995-Up (Use 14352A)	1	
14363A	Lip Seal, 4T40E Low/Reverse Servo Piston 1995-Up	1	
14364A	O-Ring, 4T40E Low/Reverse Servo Cover 1995-Up	1	
14365A	Lip Seal, 4T40E Intermediate/4th Servo Piston 1995-Up	1	
14366A	O-Ring, 4T40E Intermediate/4th Servo Cover 1995-Up	1	
14379A	Seal, 4T40E Filter 1995-Up	1	
64380	O-Ring, 4T40E Turbine Shaft (Goes Behind Splines) (4 & 6 Cylinder Type)	1	

PART #	TECHNICAL MANUALS	QTY.	REFERENCE #
14400A	Tech Manual, 4T40E 1995-Up	1	

PART #	ELECTRICAL COMPONENTS	QTY.	REFERENCE #
14410A	Switch, 4T40E Neutral Safety 1995	1	
14410AA	Switch, 4T40E Neutral Safety 1996	1	
14410AB	Switch, 4T40E Neutral Safety 1997-03	1	
14410AC	Switch, 4T40E/4T45E Neutral Safety 2004-11	1	
14421A	Solenoid, 4T40E 1-2 Shift 1995-Up (Also 2-3 Shift)	1-2	24207236
14422A	Solenoid, 4T40E 2-3 Shift 1995-Up (Use 14421A)	1	24207236
14425A	Solenoid, 4T40E Lock-Up (TCC) 1995-Up (Use 74418E)	1	24212690
74418E	Solenoid, 4T40E Lock-Up (TCC) 1995-Up	1	24212690
84431G	Solenoid, 4T40E Pressure Control (EPC) 1995-02	1	10478146
84431GA	Solenoid, 4T40E Pressure Control (EPC) 2003-Up	1	24225825
14436A	Sensor, 4T40/4T45E Output Speed (With Enclosed Pick-Up) 1997-Up	1	
84436G	Sensor, 4T40E Output Speed 2000-Up (With Enclosed Pick-Up)	1	24207507
74445E-2K	Repair Kit, 4T40E (Repairs The 2 Pin VSS Harness Only)(1"OD)	1	
84445GH	Wire Harness Repair, 4T40E External (20 Pin Connector)(GM Universal)(Rostra)	1	
14438A	Sensor, 4T40E/4T45E Input Speed 1995-Up (With Cast # 32T & 33T On The Plastic Body)	1	24218077
14438AA	Sensor, 4T40E/4T45E Input Speed 1997-Up (With Cast # 35T On The Plastic Body)	1	10456546
14442A	Switch Assembly, 4T40E Manifold Pressure (6 Pin) 1995-03	1	24226580
14442B	Switch Assembly, 4T40E Manifold Pressure (6 Pin) 2004-Up (Retro Fits The 5 Pin)	1	24217544
14444A	Connector, 4T40E Case 1995-Up	1	
14446A	Wire Harness, 4T40E Internal W/Case Connector 1995-Up (14 Prong Case Connector With 5 Two Prong Connectors & 1 Six Prong Connector)	1	
14446B	Wire Harness, 4T40E Internal With Case Connector 2004-11 (13 Prong Case Connector With 5 Two Prong Connectors And 1 Five Prong Connector)	1	
350-0063	GM Computer Repair (ECM) 4T40E/4T45E (Wire Harness With Terminal Ends)(Rostra)	1	
14447AC	Interceptor, 4T40E 1995-Up	1	

PART #	MISC. COMPONENTS	QTY.	REFERENCE #
14493A	Fill Plug, 4T40E OiL 1995-Up	1	

PART #	HARD PARTS	QTY.	REFERENCE #
14500A	Pump Assy, 4T40E Complete 1995-Up	1	24208987
14529A	Converter Reactor, 4T40E 1995-Up	1	8685660
14554A	Drum, 4T40E Forward Clutch 1995-Up	1	24203622
14555A	Reaction Carrier Shaft, 4T40E (Holds Direct Fri)(Splines Into Reaction Carrier) 1995-Up	1	
14556AK	Drum, 4T40E Reverse Input Clutch (W/Sprag)(3 Clutch) 1995-Up	1	
14559A	Drum, 4T40E Direct/Coast Clutch 1995-Up	1	

© Whatever It Takes Transmission Parts. Inc.

14562A	Piston Kit, 4T40E 2nd Clutch (Bonded) 1995-Up	1	
14564A	Piston Kit, 4T40E Forward Clutch (Bonded) 1995-Up	1	
14565A	Piston Kit, 4T40E Direct Clutch (Bonded) 1995-Up	1	
14566A	Piston Kit, 4T40E Reverse Clutch (Bonded) 1995-Up	1	
14569A	Piston Kit, 4T40E Coast Clutch (Bonded) 1995-Up	1	
14574A	Hub, 4T40E Forward Clutch 1995-Up	1	
14582A	Planet, 4T40E Input (Rear)(46 Tooth Sun Gear) 1995-Up	1	24208590
14584A	Planet, 4T40E Reaction (Front)(42 Tooth Sun Shell) 1995-Up	1	24208584
14592A	Ring Gear, 4T40E Input Planet (Rear) 1995-Up (Use 14594A)	1	8684574
14594A	Ring Gear, 4T40E Reaction Planet (Front) 1995-Up	1	8684574
14598	Ring Gear, 4T40E Final Drive (78 Teeth, Left Angled) 1995-96	1	
14598A	Ring Gear, 4T40E Final Drive (78 Teeth, Right Angled) 1997-Up	1	
14612A	Sun Gear, 4T40E Input (46 Teeth) 1995-Up	1	8684581
84618AA	Sun Gear, 4T40E Final Drive (34 Teeth, Left Angled) (2.170"OD) 1995-96	1	
84618AB	Sun Gear, 4T40E Final Drive (34 Teeth, Right Angled) (2.170"OD) 1997-Up	1	
84618C	Sun Gear, 4T40E Final Drive (38 Teeth, Left Angled) (2.410"OD) 1995-96	1	
84618CA	Sun Gear, 4T40E Final Drive (38 Teeth, Right Angled) (2.410"OD) 1997-Up	1	
14624A	Reaction Sun Shell, 4T40E W/42 Tooth Sun Gear 1995-Up	1	
14634A	Support, 4T40E Forward Drum (Cast # 24205284)(17 Roller Sprag Type)	1	24204222
14634AA	Support, 4T40E Forward Drum (Cast # 24205284)(16 Roller Sprag Type)	1	24204810
14634AB	Support, 4T40E Forward Drum (Cast # 24200088)(16 Roller Sprag Type)	1	24210106
14634AC	Support, 4T40E Forward Drum 1999	1	24212711
14648A	Sprag Assy, 4T40E Input (22 Elements)(W/Outer Race, Side Washers, Snap Ring) 1995-Up	1	
14652A	Sprag, 4T40E Low Roller Clutch (16 Rollers, Black Plastic Cage)	1	7471005
14652B	Sprag, 4T40E/4T45E Low Roller Clutch (17 Rollers, Grey Plastic Cage)	1	
14652CK	Sprag Kit, 4T40E/4T45E Low Roller Clutch (21 Rollers)(Contains: #652, 257, 634) L2006-Up (Retro Fits 1995-Up)	1	
14656A	Sprag, 4T40E 2nd Roller Clutch (W/Cage) 1995-Up	1	
14658A	Sprag, 4T40E Input (22 Elements) 1995-Up	1	24203617
14667A	Outer Race, 4T40E 2nd Roller Clutch 1995-Up	1	
14668A	Shaft, 4T40E Input Sun Gear Shaft 1995-Up	1	24203613
14669A	Outer Race, 4T40E Input Sprag 1995-Up	1	24200497
14671A	Shaft, 4T40E Pump Drive (With .060" Thick Steel Race) 1995-Up	1	8684255
14671AA	Shaft, 4T40E Pump Drive (With .550" Thick Steel Race) 2002-Up (New Design, Retro Fits To 1995)	1	
64673A	Turbine Shaft, 4T40E 1995-Up	1	8652382
14674A	Shaft, 4T40E Final Drive Sun Gear Shaft 1995-Up	1	24201609
14675A	Output Shaft, 4T40E (Short, External) 1995-Up	1	24200734
14678A	Output Shaft, 4T40E (Long, Internal) 1995-Up	1	24200733
14690A	Gear, 4T40E Parking Gear 1995-Up	1	24204708
14700A	Chain, 4T40E (4 Cylinder) 3/4" Wide 1995-03	1	24200738
14700AA	Chain, 4T40E (4 Cylinder) 5/8" Wide 11/03-Up	1	
84700C	Chain, 4T45E (7/8" Wide)(Mouse Ear Links) 1999-Up	1	
14705A	Sprocket, 4T40E Drive (32 Teeth) 1995-Up	1	24204709
14705B	Sprocket, 4T40E Drive (35 Teeth) .660" Thick 1995-Up	1	
14705BA	Sprocket, 4T40E Drive (35 Teeth) .775" Thick 1995-Up	1	
14705C	Sprocket, 4T40E Drive (33 Teeth) .660" Thick 1995-Up	1	
14705CA	Sprocket, 4T40E Drive (33 Teeth) .775" Thick 1995-Up	1	
14706A	Sprocket, 4T40E Driven (38 Teeth) 1995-Up	1	24200079
14706B	Sprocket, 4T40E Driven (35 Teeth) .660" Thick 1995-Up	1	
14706BA	Sprocket, 4T40E Driven (35 Teeth) .770" Thick 1995-Up	1	
14706C	Sprocket, 4T40E Driven (37 Teeth) .660" Thick 1995-Up	1	
14706CA	Sprocket, 4T40E Driven (37 Teeth) .775" Thick 1995-Up	1	
14713A	Support, 4T40E Driven Sprocket (Cast # 8684348) 1995-96	1	
14713B	Support, 4T40E Driven Sprocket (Cast # 24207153) 1997-02	1	24207143
14713C	Support, 4T40E Driven Sprocket (Cast # 24216212) 2003-Up	1	
14715AHK	Differential Assembly, 4T40E (38 Teeth Left Angle Sun Gear) .705"OD Pin (3.05 Ratio) 1995-96 30 Teeth Pick-Up (With 84618C Sun Gear, 84715AH Differential, 14598 Ring Gear)	1	
14715AMK	Differential Assembly, 4T40E (38 Teeth Right Angle Sun Gear) .705"OD Pin (3.05 Ratio) 1997-Up 30 Teeth Pick-Up (With 84618CA Sun Gear, 84715AM Differential, 14598A Ring Gear)	1	
14715BEK	Differential Assembly, 4T40E (34 Teeth Left Angle Sun Gear) .705"OD Pin (3.29 Ratio) 1995-96 31 Teeth Pick-Up (With 84618AA Sun Gear, 84715BE Differential, 14598 Ring Gear)	1	
14715BFK	Differential Assembly, 4T40E (34 Teeth Left Angle Sun Gear) .705"OD Pin (3.29 Ratio) 1995-96 29 Teeth Pick-Up (With 84618AA Sun Gear, 84715BF Differential, 14598 Ring Gear)	1	
14715BGK	Differential Assembly, 4T40E (34 Teeth Left Angle Sun Gear) .705"OD Pin (3.29 Ratio) 1995-96 30 Teeth Pick-Up (With 84618AA Sun Gear, 84715BG Differential, 14598 Ring Gear)	1	

© Whatever It Takes Transmission Parts. Inc.

PART #	HARD PARTS (Continued)	QTY	REFERENCE #
14715BHK	Differential Assembly, 4T40E (34 Teeth Right Angle Sun Gear) .705"OD Pin (3.29 Ratio) 1997-Up 30 Teeth Pick-Up (With 84618AB Sun Gear, 84715BH Differential, 14598A Ring Gear)	1	
14715BJK	Differential Assembly, 4T40E (34 Teeth Right Angle Sun Gear) .705"OD Pin (3.29 Ratio) 1997-Up 31 Teeth Pick-Up (With 84618AB Sun Gear, 84715BJ Differential, 14598A Ring Gear)	1	
14740A	Valve Body, 4T40E W/4 Solenoids (Cast # 8684055 or 24205471)(EPC Solenoid Is 1.320"OD)	1	24209128
14740AA	Valve Body, 4T40E W/4 Solenoids (Cast # 24209130)(EPC Solenoid Is 1.320"OD)	1	
14740AB	Valve Body, 4T40E W/4 Solenoids (Cast # 24214698 Or 24214698A)(The EPC Solenoid Is 1.320"OD)(Does Not Have A 2-3 Accumulator Valve)	1	
14740AC	Valve Body, 4T40E W/4 Solenoids (Cast # 24214698 or 24214698A)(The EPC Solenoid Is .862"OD)(Does Not Have A 2-3 Accumulator Valve)	1	
14740AD	Valve Body, 4T40E W/4 Solenoids (Cast # 24216020)(The EPC Solenoid Is .862"OD)(Does Not Have A 2-3 Accumulator Valve Or A TCC Feed Limit Valve)	1	
14740AE	Valve Body, 4T40E W/4 Solenoids (Cast # 24233226)(The EPS Solenoid Is .862"OD)(Does Not Have A 2-3 Accumulator Valve Or A TCC Feed Limit Valve)	1	

PART #	VALVE BODY COMPONENTS	QTY	REFERENCE #
14741-1A	Manual Valve, 4T40E (Goes in Channel Plate) 1995-Up	1	
14741AC-2	Sleeve, 4T40E TCC Regulator Apply Valve (Sonnax) (Use With T-33000-TL Reamer)	1	
S14741C-2	Sleeve, 4T40E TCC Control Valve Sleeve (Sonnax) (Must Use T-F-3300-TL Reamer Set) (Use T-VB-Fix Also)	1	
T-F-3300-TL	Reamer Set, Use With S14741C-2	1	
S14741F-2K	Sleeve & Spring, 4T40E Actuator Feed Limit Valve (Sonnax) (Must Use T-33886-TL Reamer)	1	
T-33886-TL	Reamer Set, Use With S14741F-2K	1	
S14741PA-1	Valve, 4T40E Pressure Regulator (Oversize) (Sonnax) (Must Use T-33886-TL2 Reamer)	1	
T-33886-TL2	Reamer Set, Use With S14741PA-1 (Sonnax)	1	
14741PK	Pressure Regulator Kit, 4T40E (Fixes 3 Valve Bodies) (Contains: 1 Guide, 1 Reamer, 3 Pair Of Valves & Springs & Seats, 3 Pump Priming Springs)	1	
14741PK-1	Pressure Regulator Refill Kit, 4T40E (Contains: 5 Each Pair Valve, Springs & Seats & Pump Priming Springs)	1	
S14741RK	Valve Kit, 4T40E/4T45E Boost Valve & Sleeve (Sonnax)	1	
T-33000-TL	Reamer Kit, 4T40E TCC Regulator Apply Sleeve (Sonnax)	1	
14747A	Plate, 4T40E Valve Body Separator 1995-Up	1	24205050

PART #	HARD PARTS (Continued)	QTY	REFERENCE #
14755A	Channel Plate, 4T40E (1.103"ID Sleeve)(Cast # 24200961) 1995-96	1	24213577
14755B	Channel Plate, 4T40E (1.128"ID Sleeve)(Cast # 24208122) 1997-98	1	24210194
14755C	Channel Plate, 4T40E (Cast # 24216013) 1999-01	1	24213193
14755D	Channel Plate, 4T40E (Cast # 24233229) 1999-Up	1	
S14755S	Sleeve, 4T40E Channel Plate (1.128"ID) 1997-Up (Sonnax)	1	
14760A	Case, 4T40E 2.4L & V-6 (Cast # 24201966) 1995-00	1	24207691
14760B	Case, 4T40E 2.2L (Cast # 24208105) 1997-00	1	24207685
14760C	Case, 4T40E (Quad 4) (Cast # 24201960) 1995-Up	1	
14760CA	Case, 4T40E (Quad 4) (Cast # 24208106) 1995-Up	1	
14760CB	Case, 4T40E/4T45E (Quad 4) (Cast # 24208156) 1994-Up	1	
14760DA	Case, 4T40E/4T45E (Saturn) (2.2L) 2000-Up (Cast # 24215871)	1	
14760F	Case, 4T40E (Cast # 24226361)	1	
14760FA	Case, 4T40E (Cast # 24226363) (5 1/8" Top Bolts)(Starter At 3:00)	1	
14760G	Case, 4T45E (3.5L) 2005-Up (Cast # 2423338)	1	
14760H	Case, 4T40E (Pontiac G4 2.4L)(Cast # 24228724) 2007-Up	1	
14765A	Pan, 4T40E Bottom 1995-Up	1	
14766A	Pan, 4T40E Side 1995-96	1	24203605
14766B	Pan, 4T40E Side 1997-98	1	24213577
14766C	Pan, 4T40E Side (Cast # 24207184) 1999-03	1	24213141
14766D	Pan, 4T40E Side (Cast # 24222115) 2004-Up	1	
14843A	Bracket, 4T40E Vehicle Speed Sensor 1995-Up	1	
14846A	Valve, 4T40E Oil Level Control 1995-Up	1	
14871A	Snap Ring, 4T40E Holds Coast Clutch Spring Retainer In Drum 1995-Up	1	
14874A	Snap Ring, 4T40E Holds 2nd Clutch Spring Retainer In Support 1995-Up	1	
14875A	Snap Ring, 4T40E Holds Forward Clutch Pressure Plate In Drum 1995-Up	1	
14877A	Snap Ring, 4T40E Holds Forward Clutch Spring Retainer In Drum 1995-Up	1	
14878A	Snap Ring, 4T40E Holds Direct Clutch Pressure Plate In Drum 1995-Up	1	
14879A	Snap Ring, 4T40E Holds Direct Clutch Spring Retainer In Drum 1995-Up	1	
64880	Snap Ring, 4T40E Holds Drive Sprocket to Turbine Shaft 1995-Up	1	8631210
14881A	Snap Ring, 4T40E Holds Input Sprag to Outer Race 1995-Up	1	

© Whatever It Takes Transmission Parts. Inc.

14882A	Snap Ring, 4T40E Holds Input Planet Ring Gear to Forward Hub (.088") 1995-Up	1		
14883A	Snap Ring, 4T40E Holds Forward Drum Support to Case 1995-Up	1		
14887A	Snap Ring, 4T40E Holds Differential Ring Gear to Case 1995-Up	1		
14888A	Snap Ring, 4T40E Holds Input Sun Gear To Input Sun Gear Shaft 1995-Up (Also Holds Final Drive Sun Gear to Final Drive Sun Gear Shaft)	2		
14889A	Snap Ring, 4T40E Holds Reaction Planet Ring Gear to Input Planet (.058") 1995-Up	1		
14890A	Snap Ring, 4T40E Holds Reverse Input Retainer In Drum 1995-Up	1		
14892A	Snap Ring, 4T40E Holds Reverse Clutch Pressure Plate In Drum 1995-Up	1		
14894A	Snap Ring, 4T40E Output Shaft(Short, External) 1995-Up (Use 14895A)	2		
14895A	Snap Ring, 4T40E Output Shaft(Long, Internal) 1995-Up	2		
14900A	Servo Assy, 4T40E Intermediate/4th Servo (Cover Cast # 24201880) 1995-Up	1		
14910A	Servo Assy, 4T40E Low/Reverse Servo (Cover Cast # 24201882) 1995-Up	1		
14926A	Spring, 4T40E 1-2 Accumulator (Outer) 1.830" Long 1995-Up	1		8685241
14926B	Spring, 4T40E 1-2 Accumulator Cushion (Inner) .850" Long 1995-Up	1		
14927A	Piston, 4T40E 1-2 Accumulator (Plastic) 1995-Up (Also Fits 2-3 & 3-4 Accumulator)	1-3		24210506
14931A	Spring, 4T40E 2-3 Accumulator (Outer) 1.670" Long 1995-Up (Also Fits 3-4 Accumulator)	1-2		8685240
14931B	Spring, 4T40E 2-3 Accumulator Cushion (Inner) 1.950" Long 1995-Up	1		
14932A	Piston, 4T40E 2-3 Accumulator (Plastic) 1995-Up (Use 14927A)	1		24210506
14936A	Spring, 4T40E 3-4 Accumulator (Outer) 1.670" Long 1995-Up (Use 14931A)	1		8685240
14937A	Piston, 4T40E 3-4 Accumulator (Plastic) 1995-Up (Use 14927A)	1		24210506
14962A	Piston, 4T40E 2nd Clutch (Bonded) 1995-Up	1		
14962AK	Piston Set, 4T40E (Bonded) 1995-Up (Contains: 14962A, 14964A, 14964B, 14965A, 14966A, 14338A, 14969A)	1		
14964A	Piston, 4T40E Forward Clutch (Inner)(Bonded)(Not Reusable if Taken Out) 1995-Up	1		
14964B	Piston, 4T40E Forward Clutch (Outer)(Bonded) 1995-Up	1		
14965A	Piston, 4T40E Direct Clutch (Outer)(Bonded) 1995-Up	1		
14966A	Piston, 4T40E Reverse Clutch (Outer)(Bonded) 1995-Up	1		
14969A	Piston, 4T40E Coast Clutch (Inner)(Bonded) 1995-Up	1		
14972A	Spring & Retainer, 4T40E 2nd Clutch 1995-Up	1		
14974A	Spring & Retainer, 4T40E Forward Clutch 1995-Up	1		
14975A	Spring & Retainer, 4T40E Direct Clutch 1995-Up	1		
14976A	Spring & Retainer, 4T40E Reverse Clutch 1995-Up	1		
14979A	Spring, 4T40E Coast Clutch Return 1995-Up	1		
14986A	Retainer, 4T40E 2nd Roller Clutch(Not Reusable if Taken Off) 1995-Up	1		24207224
14989A	Retainer, 4T40E Coast Clutch Spring 1995-Up	1		
14991A	Linkage Assy, 4T40E Internal 1995-Up	1		
14999A	Tube Set, 4T40E Oil Tubes 1995-Up	1		

© Whatever It Takes Transmission Parts. Inc.

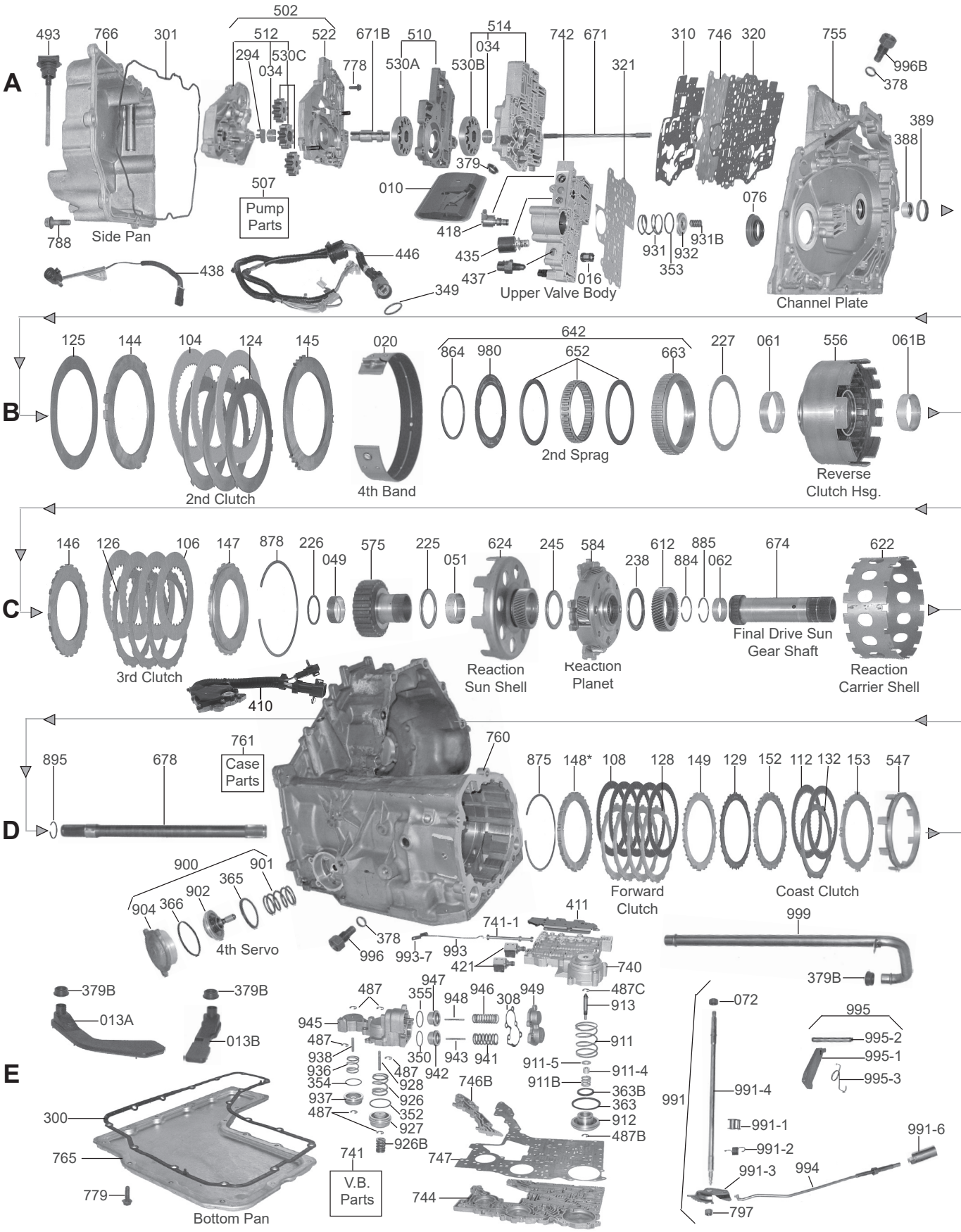
A
493
766
301
502
512
522
294
530C
034
671B
778
510
530A
514
034
530B
742
671
321
310
746
320
755
996B
378
389
388
379
507
Pump Parts
010
076
788
Side Pan
418
435
437
016
Upper Valve Body
931
931B
932
353
438
446
349
Channel Plate
B
125
144
104
124
145
020
642
864
980
652
663
227
061
556
061B
2nd Clutch
4th Band
2nd Sprag
Reverse Clutch Hsg.
C
146
126
106
147
878
226
049
575
225
051
624
245
584
238
612
885
884
062
674
622
3rd Clutch
410
Reaction Sun Shell
Reaction Planet
Final Drive Sun Gear Shaft
Reaction Carrier Shell
D
895
678
761
Case Parts
760
875
148*
108
128
149
129
152
112
132
153
547
900
901
365
902
904
366
4th Servo
Forward Clutch
Coast Clutch
411
741-1
378
996
993-7
993
421
740
999
379B
E
379B
013A
379B
013B
487
947
355
948
946
308
949
487C
913
945
911
487
938
936
354
937
487
350
943
941
911-5
911-4
911B
363B
363
912
487B
487
928
926
352
927
926B
746B
747
744
741
V.B. Parts
300
765
779
Bottom Pan
072
995
995-2
995-1
995-3
991
991-4
991-1
991-2
991-3
994
991-6
797

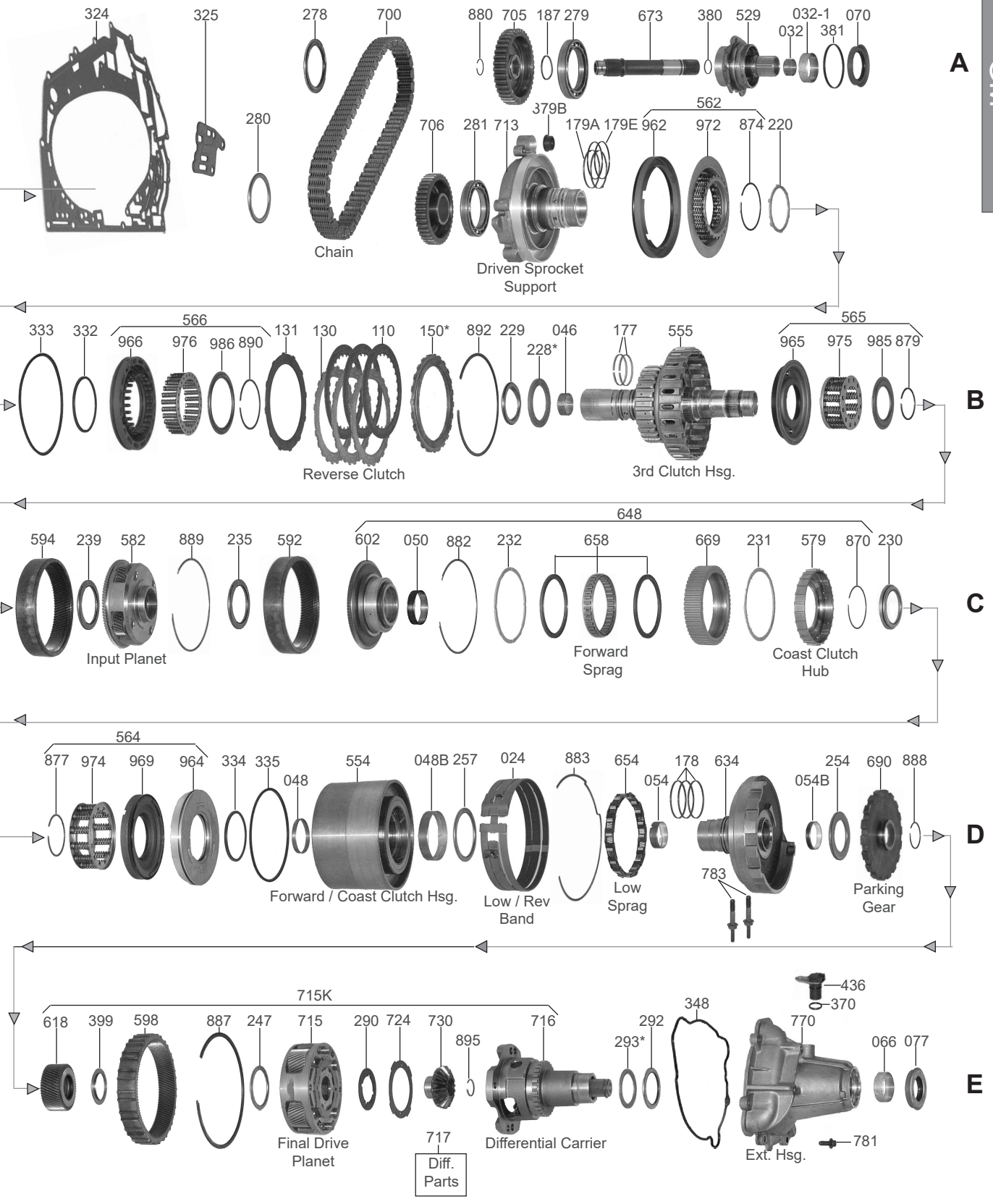

00 R Kit
02 K Kit
04 ster els Kit
06 ster els Kit
30 ng Kit
19 tion dule
39 Module
75 g Kit
00 er Kit
01 ng Kit
90 Manual

© Whatever It Takes Transmission Parts. Inc.

PART #	PAPER & RUBBER KIT	QTY.	REFERENCE #
94000AW	Paper & Rubber Kit, 4T80E (Bonded Gasket) 1993-Up	1	

PART #	OVERHAUL KIT	QTY.	REFERENCE #
94002AW	Overhaul Kit, 4T80E (With Bonded Pan Gaskets) 1993-Up (Without Bonded Valve Body Plate) (Without Bonded Pistons)	1	

PART #	MASTER L/STEEL KIT	QTY.	REFERENCE #
94004AW	Master L/Steels, 4T80E (With Bonded Pan Gaskets) 1993-94 (Without Bonded Valve Body Plate) (Without Bonded Pistons)	1	
94004BW	Master L/Steels, 4T80E (With Bonded Pan Gaskets) 1995-Up (Without Bonded Pistons)	1	

PART #	MASTER W/STEEL KIT	QTY.	REFERENCE #
94006AW	Master W/Steels, 4T80E (With Bonded Pan Gasket) 1993-94 (Without Bonded Valve Body Plate) (Without Bonded Pistons)	1	
94006BW	Master W/Steels, 4T80E (With Bonded Pan Gasket) 1995-Up (Without Bonded Pistons)	1	

PART #	FILTER	QTY.	REFERENCE #
94010A	Filter, 4T80E Oil (Main) (Under Side Cover) 1993-Up	1	
94013A	Filter, 4T80E Left Scavenger 1993-Up	1	
94013B	Filter, 4T80E Right Scavenger 1993-Up	1	

PART #	BANDS	QTY.	REFERENCE #
94020A	Band, 4T80E Overdrive (Front, Flex) 1993-Up	1	8684246
94024A	Band, 4T80E Low/Reverse (Rear, Double Wrap) 1993-Up	1	24204502

PART #	BUSHINGS	QTY.	REFERENCE #
94030A	Bushing Kit, 4T80E 1993-Up	1	
94032A	Bushing, 4T80E Converter Hub (Presses in Converter Reactor) 1993-Up	1	
94034A	Bushing, 4T80E Pump Body (Secondary & Scavenger) 1993-Up	2	
94036A	Bushing, 4T80E Converter Reactor (Inner) 1993-Up	1	
94045A	Bushing, 4T80E Driven Sprocket Support 1993-Up	1	
94046A	Bushing, 4T80E 3rd Clutch Housing 1993-Up	1	
94048A	Bushing, 4T80E Forward/Coast Clutch Housing (Front, Small) 1993-Up	1	
94048B	Bushing, 4T80E Forward/Coast Clutch Housing (Rear, Large) 1993-Up	1	
94049A	Bushing, 4T80E 3rd Clutch Hub 1993-Up	1	
94050A	Bushing, 4T80E Input Planet Hub 1993-Up	1	
94051A	Bushing, 4T80E Reaction Sun Shell 1993-Up	1	
94054A	Bushing, 4T80E Forward/Coast Clutch Support (Front, Small) 1993-Up	1	
94054B	Bushing, 4T80E Forward/Coast Clutch Support (Rear, Large) 1993-Up	1	
94061A	Bushing, 4T80E Reverse Clutch Housing (Front, Large) 1993-Up	1	
94061B	Bushing, 4T80E Reverse Clutch Housing (Rear, Small) 1993-Up	1	
94062A	Bushing, 4T80E Final Drive Shaft 1993-Up	1	
94066A	Bushing, 4T80E Extension Housing 1993-Up	1	

PART #	METAL CLAD SEALS	QTY.	REFERENCE #
94070A	Seal, 4T80E Converter Reactor 1993-Up	1	8677749
84072A	Seal, 4T80E Manual Shaft (.290” Thick)(.760”OD) 1993-Up	1	
94076A	Seal, 4T80E Axle (Case Cover, Drivers Side) 1993-Up	1	8679679
94077A	Seal, 4T80E Axle (Extension Housing, Passengers Side) 1993-Up	1	8677554

PART #	FRICTION CLUTCH	QTY.	REFERENCE #
94104A	Friction, 4T80E 2nd Clutch .081” (54 Teeth) 1993-94	3	
94104B	Friction, 4T80E 2nd Clutch .071” (54 Teeth) 1995-Up	4	
94106A	Friction, 4T80E 3rd Clutch .081” (26 Teeth) 1993-Up	4	8684832
94108A	Friction, 4T80E Forward Clutch .081” (53 Teeth) 1993-Up	5	24206898
94110A	Friction, 4T80E Reverse Clutch .081” (26 Teeth) 1993-Up	3	24206897
94112A	Friction, 4T80E Coast Clutch .081” (51 Teeth) 1993-94	2	
94112B	Friction, 4T80E Coast Clutch .081” (53 Teeth) 1995-Up	2	
94119A	Friction Module, 4T80E 1993-94	1	
94119B	Friction Module, 4T80E 1995-Up	1	

© Whatever It Takes Transmission Parts. Inc.

PART #	STEEL CLUTCH	QTY.	REFERENCE #
94124A	Steel, 4T80E 2nd Clutch .091” (5 Teeth) 1993-94	2-4	
94124B	Steel, 4T80E 2nd Clutch .081” (5 Teeth) 1995-Up	2-4	
94125A	Steel, 4T80E 2nd Clutch .042” (Waved) 1993-Up	1	
94126A	Steel, 4T80E 3rd Clutch .091” (22 Teeth) 1993-Up	3	8677612
94128A	Steel, 4T80E Forward Clutch .077” (16 Teeth) 1993-Up	4	8679584
94129A	Steel, 4T80E Forward Clutch .063” (16 Teeth, Dished) 1993-Up	1	8684654
94130A	Steel, 4T80E Reverse Clutch .091” (22 Teeth) 1993-Up	3	8677615
94131A	Steel, 4T80E Reverse Clutch .071” (12 Teeth)(Dished) 1993-Up	1	
94132A	Steel, 4T80E Coast Clutch .123” (8 Teeth) 1993-Up	1	8677808
94139A	Steel Module, 4T80E 1993-94	1	
94139B	Steel Module, 4T80E 1995-Up	1	

PART #	CLUTCH PRESSURE PLATES	QTY.	REFERENCE #
94144A	Apply Plate, 4T80E 2nd Clutch .177” (5 Teeth) 1993-Up	1	
94145A	Pressure Plate, 4T80E 2nd Clutch .265” (5 Teeth) 1993-Up	1	
94146A	Apply Plate, 4T80E 3rd Clutch .141” (22 Teeth) 1993-Up	1	8677613
94147A	Pressure Plate, 4T80E 3rd Clutch .159” (22 Teeth)(# 2) 1993-Up	1	8678722
94148A	Pressure Plate, 4T80E Forward Clutch .310” (16 Teeth)(Stamped C) 1993-Up	1	
94148AA	Pressure Plate, 4T80E Forward Clutch .320” (16 Teeth)(Stamped D) 1993-Up	1	
94149A	Apply Plate, 4T80E Forward Clutch .159” (16 Notched Teeth) 1993-Up	1	8684653
94150A	Pressure Plate, 4T80E Reverse Clutch .194” (24 Teeth)(Stamped B) 1993-Up	1	
94152A	Pressure Plate, 4T80E Coast Clutch .159” (16 Notched Teeth) 1993-Up (Use 94149A)	1	8684653
94153A	Apply Plate, 4T80E Coast Clutch .207” (8 Notched Teeth) 1993-Up	1	8679837

PART #	OIL SEALING RINGS	QTY.	REFERENCE #
94175AT	Ring Kit, 4T80E 1993-Up	1	
84177T	Ring, 4T80E Input Shaft (3rd Clutch)(Solid)(Teflon) 1993-Up	2	8656342
94178AT	Ring, 4T80E Forward/Coast Clutch (Lap Joint)(Teflon) 1993-Up	3	8679587
94179AT	Ring, 4T80E 2nd Clutch (Vespel) 1993-Up	2	8678235
94179ET	Ring, 4T80E 2nd Clutch (Quad)(Rubber Expander) 1993-Up	2	8678234
94187AT	Ring, 4T80E Drive Sprocket (Teflon) 1993-Up	1	

PART #	WASHERS & BEARINGS	QTY.	REFERENCE #
94200A	Washer Kit, 4T80E 1993-Up	1	
94201A	Bearing Kit, 4T80E 1993-Up	1	
94220A	Washer, 4T80E Driven Sprocket Support to Reverse Clutch Hsg (6 Tab, Plastic) 1993-Up	1	8679618
94225A	Bearing, 4T80E 3rd Clutch Hub to Sun Shell 1993-Up	1	8677884
94226A	Washer, 4T80E 3rd Clutch Housing to 3rd Clutch Hub (Plastic) 1993-Up	1	8678721
94227A	Washer, 4T80E Reverse Clutch Housing to 2nd Sprag (4 Tab, Plastic) 1993-Up	1	8678725
94228A	Washer, 4T80E Reverse Clu Hsg to 3rd Clu Hsg 2.27-2.49MM (3 Tab, Plastic) 1993-Up	1	
94228AA	Washer, 4T80E Reverse Clu Hsg to 3rd Clu Hsg 2.58-2.80MM (3 Tab, Plastic) 1993-Up	1	
94228AB	Washer, 4T80E Reverse Clu Hsg to 3rd Clu Hsg 2.89-3.11MM (3 Tab, Plastic) 1993-Up	1	
94228AC	Washer, 4T80E Reverse Clu Hsg to 3rd Clu Hsg 3.20-3.42MM (3 Tab, Plastic) 1993-Up	1	
94228AD	Washer, 4T80E Reverse Clu Hsg to 3rd Clu Hsg 3.51-3.73MM (3 Tab, Plastic) 1993-Up	1	
94228AE	Washer, 4T80E Reverse Clu Hsg to 3rd Clu Hsg 3.82-4.04MM (3 Tab, Plastic) 1993-Up	1	
94228AF	Washer, 4T80E Reverse Clu Hsg to 3rd Clu Hsg 4.13-4.35MM (3 Tab, Plastic) 1993-Up	1	
94228AG	Washer, 4T80E Reverse Clu Hsg to 3rd Clu Hsg 4.44-4.66MM (3 Tab, Plastic) 1993-Up	1	
94228AH	Washer, 4T80E Reverse Clu Hsg to 3rd Clu Hsg 4.75-4.97MM (3 Tab, Plastic) 1993-Up	1	
94229A	Bearing, 4T80E Driven Sprocket Support to 3rd Clutch Housing 1993-Up	1	8677886
94230A	Bearing, 4T80E Coast Clutch Hub to Forward/Coast Clutch Housing 1993-Up	1	
94231A	Washer, 4T80E Forward Sprag Outer Race to Coast Clutch Hub (4 Tab, Plastic) 1993-Up	1	
94232A	Washer, 4T80E Input Sprag Outer Race to Forward Sprag Outer Race(4 Tab, Plastic) 1993-Up	1	
94235A	Bearing, 4T80E Input Planet to Input Planet Hub 1993-Up	1	8678189
94238A	Bearing, 4T80E Reaction Planet to Input Sun Gear 1993-Up	1	9436851
94239A	Bearing, 4T80E Input Sun Gear to Input Planet (Stays in Planet)(Use 94238A) 1993-Up	1	9436851
94245A	Bearing, 4T80E Sun Shell to Reaction Planet (Stays in Planet) 1993-Up	1	
94247A	Bearing, 4T80E Final Drive Sun Gear to Final Drive Planet (Stays in Planet) 1993-Up	1	
94254A	Bearing, 4T80E Forward/Coast Clutch Support to Park Gear (Use 84238) 1993-Up	1	8646504
84238	Bearing, 4T80E Forward/Coast Clutch Support to Park Gear 1993-Up	1	8646504
94257A	Bearing, 4T80E Forward/Coast Clutch Housing to Forward/Coast Clutch Support 1993-Up	1	8678211
T94275A	Axle Stabilizer, 4T80 (Cadillac)(Teckpak)	1	
94278A	Bearing, 4T80E Channel Plate to Drive Sprocket (Use 94238A) 1993-Up	1	9436851
94279A	Ball Bearing, 4T80E Drive Sprocket to Converter Reactor 1993-Up	1	8677841
94280A	Bearing, 4T80E Channel Plate to Driven Sprocket 1993-96	1	24203059

© Whatever It Takes Transmission Parts. Inc.

PART #	WASHERS & BEARINGS	QTY.	REFERENCE #
94280AA	Bearing, 4T80E Channel Plate to Driven Sprocket 1997-99	1	8638118
94281A	Ball Bearing, 4T80E Driven Sprocket to Support (Use 94279A) 1993-Up	1	8677841
94290A	Race, 4T80E Final Drive Carrier to Pinion (W/4 Notches & Holes) 1993-Up	1	
94292A	Bearing, 4T80E Differential to Extension Housing (Use 94238A) 1993-Up	1	9436851
94293A	Race, 4T80E Differential to Extension Housing 2.65-2.77MM 1993-Up	1	
94293AA	Race, 4T80E Differential to Extension Housing 2.79-2.90MM 1993-Up	1	
94293AB	Race, 4T80E Differential to Extension Housing 2.93-3.04MM 1993-Up	1	
94293AC	Race, 4T80E Differential to Extension Housing 3.07-3.18MM 1993-Up	1	
94293AD	Race, 4T80E Differential to Extension Housing 3.21-3.32MM 1993-Up	1	
94293AE	Race, 4T80E Differential to Extension Housing 3.35-3.46MM 1993-Up	1	
94293AF	Race, 4T80E Differential to Extension Housing 3.49-3.59MM 1993-Up	1	
94294A	Washer, 4T80E Scavenge Pump Body to Driven Pump Shaft 1993-Up	1	

PART #	GASKETS & RUBBER COMPONENTS	QTY.	REFERENCE #
94300AF	Gasket, 4T80E Bottom Pan (Farpak) 1993-Up	1	
94300AW	Gasket, 4T80E Bottom Pan (Bonded Rubber) 1993-Up	1	
94301A	Gasket, 4T80E Side Pan (Molded Rubber) 1993-Up	1	8679392
94305A	Gasket, 4T80E Extension Housing (Molded Rubber) 1993-Up	1	8679017
94310A	Gasket, 4T80E Secondary Pump to Seperator Plate 1993-Up	1	
94320A	Gasket, 4T80E Upper Valve Body Plate to Channel Plate 1993-Up	1	
94321A	Gasket, 4T80E Upper Valve Body to Spacer Plate 1993-Up	1	
94324A	Gasket, 4T80E Channel Plate to Case (Outer)(Bonded) 1993-Up	1	24208778
94325AA	Gasket, 4T80E Channel Plate to Support (Inner)(Bonded) 1995-Up	1	24208779
94332A	O-Ring, 4T80E Reverse Clutch Piston (Inner) 1993-Up	1	
94333A	O-Ring, 4T80E Reverse Clutch Piston (Outer) 1993-Up	1	
94334A	O-Ring, 4T80E Forward Clutch Piston (Inner) 1993-Up	1	
94335A	O-Ring, 4T80E Forward Clutch Piston (Outer) 1993-Up	1	
94347A	O-Ring, 4T80E Case Connector 1993-Up	1	
94353A	O-Ring, 4T80E 2-3 Accumulator Piston 1993-Up	1	
94365A	Lip Seal, 4T80E 4th Servo Piston 1993-Up	1	8679289
94366A	O-Ring, 4T80E 4th Servo Cover 1993-Up	1	8679290
94370A	O-Ring, 4T80E Output Speed Sensor 1993-Up	1	
94378A	O-Ring, 4T80E Cooler Fitting 1993-Up	2	
94379A	Boot, 4T80E Main Filter (.295” Tall) 1993-Up	1	
94379B	Boot, 4T80E Left & Right Scavenge Filter & Scavenge Tube (.440” Tall) 1993-Up	4	8680504
94380A	O-Ring, 4T80E Turbine Shaft 1993-Up (Use 86380)	1	8686052
86380	O-Ring, 4T80E Turbine Shaft 1993-Up	1	
94381A	O-Ring, 4T80E Converter Reactor to Case 1993-Up	1	8681100
94388A	Seal, 4T80E Channel Plate to Turbine Shaft 1993-Up	1	24201991
94389A	Seal, 4T80E Channel Plate to Drive Sprocket 1993-Up	1	24201992
94399A	Seal, 4T80E Final Drive Sun Gear to Pinion Gear 1993-Up	1	

PART #	TECHNICAL MANUALS	QTY.	REFERENCE #
94400A	Tech Manual, 4T80E 1993-Up	1	

PART #	ELECTRICAL COMPONENTS	QTY.	REFERENCE #
94410A	Neutral Safety Switch, 4T80E (External)(With 6” Long Wire Harness With 7 Prong Connector) 1993-99	1	12450158
94410AA	Neutral Safety Switch, 4T80E (External)(With 11” Long Wire Harness With One 7 Prong Connector & With One 4 Pin Connector) 1993-99	1	
94410B	Internal Mode Switch, 4T80E (IMS)(Internal)(With 7 Prong Connector)(Hooks To Manual Valve) 2000-Up	1	
94411A	Switch, 4T80E Pressure (3 Prong) 1993-99	1	24200770
94411B	Switch, 4T80E Pressure (2 Prong) 2000-Up	1	
74418E	Solenoid, 4T80E TCC (Lock-Up) 1993-Up	1	
94421AA	Solenoid, 4T80E 1-2 Shift (Black Connector) 1996-11 (Also Fits 4T80E 3-4 Shift (Black Connector) 1996-11)	2	24207662
94421AK	Solenoid Kit, 4T80E 1-2 & 3-4 Shift (Black Connector) 1993-99 (Contains 2 Solenoids) (For 2000-Up Sell One 94421AA And One 94421B)	1	24211355
94421B	Solenoid, 4T80E 3-4 Shift (Some 2000-Up) (Gray Connector)	1	24207384
34435A	Solenoid, 4T80E Pressure Control (Force Motor) 1993-03 (Has 2 Flat Blades On End Of Solenoid)	1	24220158
34435AK	Repair Kit, 4T80E (Force Motor Solenoid) 1992-02 (With Tool Kit) Fixes 4 Solenoids	1	
34435AK-1	Repair Kit Refills, 4L80E (Force Motor Solenoid) 1992-02 (Without Tool Kit) Fixes 4 Solenoids	1	
84436A	Sensor, 4T80E Vehicle Speed 1994-96	1	

© Whatever It Takes Transmission Parts. Inc.

94436A	Sensor, 4T80E Vehicle Speed 1993 & 1997-Up	1	24204319
94436AA	Sensor, 4T80E Vehicle Speed 1994-96 (Use 84436A)	1	10456034
94437A	Sensor, 4T80E Temperature 1993-Up	1	8678854
94438A	Sensor, 4T80E Input Speed (With 14" Wire Harness) 1993-E96 (1st Design With Flat Metal Bracket)	1	24209654
94438AA	Sensor, 4T80E Input Speed (With 9 1/2" Wire Harness) L1996-Up (2nd Design With Large Hump On Metal Bracket)	1	24207491
74445E-2K	Repair Kit, 4T80E (Repairs The 2 Pin VSS Harness Only) (1"OD)	1	
84445GH	Wire Harness Repair, 4T80E External (20 Pin Connector)(GM Universal)(Rostra)	1	
94446A	Wire Harness, 4T80E Internal/External W/2 Internal Connectors (1 W/8 Prongs & 1 W/6 Prongs)	1	12143262
94446AA	Wire Harness, 4T80E Internal/External (14 Prong) 1994-96 (With 1 Three & 6 Two Prong Internal Connectors) (Pass Through Case connector Is 1.560"OD)	1	
94446AB	Wire Harness, 4T80E Internal/External (14 Prong) 1997-99 (With 1 Three & 6 Two Prong Internal Connectors) (Pass Through Case Connector Is 1.430"OD)	1	15303097
94446AD	Wire Harness, 4T80E Internal/External (18 Prong) 2000-03 (With 1 Ten & 4 Two Prong Internal Connectors) (Pass Through Case Connector Is 1.430"OD)	1	
94446AG	Wire Harness, 4T80E Internal/External (16 Prong) 2004-05 (With 1 Eight & 4 Two Prong Internal Connectors) (Pass Through Case Connector Is 1.430"OD)	1	
94446AG-1	Wire Harness, 4T80E Internal/External (Pass Through Case Connector)(Secondary Harness) 2004-05 (Use With D94446AG)	1	
350-0063	GM Computer Repair (ECM) 4T80E (Wire Harness With Terminal Ends)(Rostra)	1	
94447A	Interceptor, 4T80E 1993-Up	1	
94487	Clip, 4T80E 1-2 & 3-4 Accumulator Pin Clips	1-6	

PART #	HARD PARTS	QTY.	REFERENCE #
94502A	Pump, 4T80E Scavenge W/Cover (Aluminum) 1993-99	1	8684303
94510A	Body, 4T80E Primary Pump (Cast Iron) 1993-99	1	8684949
94514A	Body, 4T80E Secondary Pump (Aluminum, W/Pressure Regulator Valve) 1993-99	1	8684950
94529A	Converter Reactor, 4T80E 1993-Up	1	8681071
94547A	Apply Ring, 4T80E Forward Clutch (Aluminum)(1.150" Thick, 8 Legs) 1993-Up	1	8682665
94554A	Drum, 4T80E Forward/Coast Clutch 1993-Up	1	8682878
94555A	Drum, 4T80E 3rd Clutch 1993-Up	1	8682114
94556A	Drum, 4T80E Reverse Clutch (Less Sprag) 1993-98 (From Top Of Snap Ring Groove To Top Edge Of Drum Measures .180")	1	8684006
94556AB	Drum, 4T80E Reverse Clutch (Less Sprag) 1999-Up (From Top Of Snap Ring Groove To Top Edge Of Drum Measures .360")	1	24212654
94565A	Piston Kit, 4T80E Forward & Coast Clutch (Aluminum Forward And A Bonded Coast Piston) 1993-Up	1-2	
94575A	Hub, 4T80E 3rd Clutch 1993-Up	1	8678084
94579A	Hub, 4T80E Coast Clutch (26 Outer Teeth)(W/4 Holes For Washer) 1993-Up	1	
94582A	Planet, 4T80E Input 1993-Up	1	
94584A	Planet, 4T80E Reaction 1993-Up	1	8681884
94592A	Ring Gear, 4T80E Input Planet 1993-Up	1	
94594A	Ring Gear, 4T80E Reaction Planet (Use 94592A) 1993-Up	1	
94598A	Ring Gear, 4T80E Final Drive Planet (114 Teeth) 1993-Up	1	8677862
94602A	Hub, 4T80E Input Planet Ring Gear (W/Inner Race) 1993-Up	1	
94612A	Sun Gear, 4T80E Input Planet (50 Teeth) 1993-Up	1	8678076
94618A	Sun Gear, 4T80E Final Drive Planet (42 Tooth) 1993-Up	1	8678825
94618B	Sun Gear, 4T80E Final Drive Planet (46 Tooth) 1993-Up	1	8679852
94618C	Sun Gear, 4T80E Final Drive Planet (54 Tooth) 1993-Up	1	8683806
94622A	Shell, 4T80E Reaction Planet 1993-Up	1	8678075
94624A	Sun Shell, 4T80E Reaction W/46 Tooth Sun Gear (W/8 Holes) 1993-Up	1	8678083
94634A	Support, 4T80E Forward/Coast Clutch Drum 1993-Up	1	8682237
94648A	Sprag Assembly, 4T80E Forward (36 Lugs) 1993-Up (Contains: # 602, 882, 232, 658, 669, 231, 579 & 870)	1	
94652A	Sprag, 4T80E 2nd (16 Lug)(W/Side Washers) 1993-Up	1	8686053
94654A	Roller Clutch, 4T80E Low Roller (18 Roller, W/Plastic Cage) 1993-Up	1	7471004
94658A	Sprag, 4T80E Forward (36 Lug)(W/Side Washers) 1993-Up	1	
94663A	Outer Race, 4T80E 2nd Sprag (For 16 Lug Sprag)(1" Thick, W/6 Holes) 1993-Up	1	24201548
94669A	Outer Race, 4T80E Forward Sprag (For 36 Lug Sprag)(1.125" Thick, W/2 Holes) 1993-Up	1	
94671A	Shaft, 4T80E Pump Drive 1993-Up	1	8679883
94671B	Shaft, 4T80E Pump Driven 1993-Up	1	
94673A	Shaft, 4T80E Turbine (6 7/8" Long) 1993-Up	1	24207022
94673B	Shaft, 4T80E Turbine (7" Long) L1994-Up	1	
94674A	Shaft, 4T80E Final Drive Sun Gear 1993-Up	1	8678124
94678A	Shaft, 4T80E Output (20" Long, 1.380"OD Bushing Surface) 1993-Up	1	8677017
94690A	Gear, 4T80E Parking Gear 1993-Up	1	8677214
94700A	Chain, 4T80E Drive (7/8" Wide) 1993-94(Use 94705BK)	1	

© Whatever It Takes Transmission Parts. Inc.

PART #	HARD PARTS (Continued)	QTY	REFERENCE #
94700B	Chain, 4T80E Drive (1” Wide) 1993-Up	1	
94705A	Sprocket, 4T80E Drive (3/4” Wide)(39 Tooth) 1993-94	1	
94705B	Sprocket, 4T80E Drive (7/8” Wide)(39 Tooth) 1993-Up	1	
94705BK	Sprocket Assy, 4T80E (W/1” Wide Chain, Drive & Driven Sprocket) 1993-Up	1	
94706A	Sprocket, 4T80E Driven (3/4” Wide)(39 Tooth) 1993-94	1	
94706B	Sprocket, 4T80E Driven (7/8” Wide)(39 Tooth) 1993-Up	1	
94713A	Support, 4T80E Driven Sprocket (Cast # 8683160) 1993-94	1	8683149
94713B	Support, 4T80E Driven Sprocket (Cast # 24206734 or 24201538) 1995-Up	1	24201535
94715A	Final Drive Planet, 4T80E (42 Tooth Sun Gear)(36 Tooth Pinions) 1993-Up	1	
94715AK	Final Drive Assembly, 4T80E (42 Tooth Sun Gear)(Includes # 618 to # 716) 1993-Up	1	
94715B	Final Drive Planet, 4T80E (46 Tooth Sun Gear) 1993-Up	1	
94715BK	Final Drive Assembly, 4T80E (46 Tooth Sun Gear)(Includes # 618 to # 716) 1993-Up	1	
94715C	Final Drive Planet, 4T80E (54 Tooth Sun Gear) 1993-Up	1	
94715CK	Final Drive Assembly, 4T80E (54 Tooth Sun Gear)(Includes # 618 to # 716) 1993-Up	1	
94716A	Differential Carrier, 4T80E (Less Pinion Gear) 1993-Up	1	
94730A	Pinion, 4T80E Gear (15 Tooth) 1993-Up	1	
94740A	Valve Body, 4T80E Lower (Bottom Pan)(Cast # 24200442) 1993-Up	1	

PART #	VALVE BODY COMPONENTS	QTY	REFERENCE #
94741A-1	Clip, 4T80E Holds Manual Link (Plastic) 1993-Up	1	
94741A-1K	Manual Link Assembly, 4T80E (Valve, Link, & Clip) 1993-Up	1	
S94741C-1K	Valve & Sleeve, 4T80E Converter Regulator Valve, Sleeve, Springs, Washer, And End Plug (Sonnax) (Must Use T-72854-TL2)	1	
T-72854-TL2	Reamers, 4T80E (For S94741C-1K)	1	
S94741FK	Valve & Sleeve Assembly, 4T80E Actuator Limit Valve (Sonnax) (Contains: Valve, Sleeve, 2 Springs, & Retaining Clip)(Must Use T-72854-TL)	1	
T-72854-TL	Reamer, 4T80E (For S94741FK) (Sonnax)	1	
S94741P-1K	Boost Valve Kit, 4T80E (Valve & Sleeve) 1993-Up (Sonnax)	1	
S94741POS-1K	Boost Valve Assembly, 4T80E Pressure Regulator (Oversize)(Sonnax)(Contains: Oversized Pressure Regulator Valve, Oversized Boost Valve & Spring)(Must Use T-T-72754-TL3)	1	
T-T-72754-TL3	Use With S94741POS-1K	1	

PART #	HARD PARTS (Continued)	QTY	REFERENCE #
94742A	Valve Body, 4T80E Upper (Side Pan)(W/2-3 Accum. Assy)(Cast # 8684821) 1993-98	1	24210640
94744A	Plate, 4T80E Lower Valve Body Channel (Cast # 24200434) 1993-Up	1	
94746A	Plate, 4T80E Upper Valve Body Separator (Stamped # 83760) 1993-Up	1	
94746B	Plate, 4T80E Lower Oil Transfer (Cast # 8679437) 1993-Up	1	8679437
94747A	Seperator Plate, 4T80E Lower Valve Body (With Bonded Gaskets)1993-94 (Code 0435 or No Code Number)	1	8685152
94747B	Seperator Plate, 4T80E Lower Valve Body (With Bonded Gaskets) 1995-96 (Code 1193)	1	24201193
94747C	Seperator Plate, 4T80E Lower Valve Body (With Bonded Gaskets) 1997-03 (Code 5347 Or 3957)	1	24205347
94747D	Seperator Plate, 4T80E Lower Valve Body (With Bonded Gaskets) 2004-Up (Code 5286)	1	
94755A	Channel Plate, 4T80E Case Cover (Cast # 8684818)	1	
94755AA	Channel Plate, 4T80E Case Cover (Cast # 24200293)	1	
94755AB	Channel Plate, 4T80E Case Cover (Cast # 8682149)	1	
94760A	Case, 4T80E (Cast # 8685109) 1993-94	1	24210376
94760B	Case, 4T80E (Cast # 8685564) (1.576”ID Case Connector Hole) 1995-99	1	24206983
94760C	Case, 4T80E (Cast # 8683748) 1997	1	24200291
94760D	Case, 4T80E (Cast # 8685564) (1.438”ID Case Connector Hole) 1997-Up	1	24210377
94765A	Pan, 4T80E Bottom 1993-Up	1	8681485
94766A	Pan, 4T80E Side 1993-97 (With 3 Threaded Mounting Bolt Holes)(Cast # Ending In 342)	1	8684342
94766B	Pan, 4T80E Side 1998-99	1	24207464
94766C	Pan, 4T80E Side 2000-Up (With 3 Threaded Mounting Bolt Holes)(CAst # Ending In 9273)	1	
94770A	Extension Housing, 4T80E (7 1/4” Long)(Cast # 8683545) 1993-Up	1	8683544
94786AK	Bolt Set, 4T80E Differential Carrier to Final Drive Planet 1993-Up (4 Per Set)	1	
94843A	Bracket, 4T80E Vehicle Speed Sensor 1993-Up	1	
94864A	Snap Ring, 4T80E Holds 2nd Sprag to Reverse Drum (Spiral, Not Reusable) 1993-Up	1	8678726
94870A	Snap Ring, 4T80E Holds Coast Clutch Hub to Input Hub 1993-Up	1	
94874A	Snap Ring, 4T80E Holds 2nd Clutch Retainer to Support 1993-Up	1	8678230
94875A	Snap Ring, 4T80E Holds Forward Clutch Pressure Plate in Drum (.077”) 1993-Up	1	8678880
94877A	Snap Ring, 4T80E Holds Forward Clutch Retainer in Drum 1993-Up	1	8678877
94878A	Snap Ring, 4T80E Holds 3rd Clutch Pressure Plate in Drum (.076”) 1993-Up	1	8683742
94879A	Snap Ring, 4T80E Holds 3rd Clutch Retainer in Drum 1993-Up	1	8678777
94880A	Snap Ring, 4T80E Holds Drive Sprocket to Turbine Shaft 1993-Up	1	8685114
94882A	Snap Ring, 4T80E Holds Input Hub to Input Ring Gear 1993-Up	1	8677619

© Whatever It Takes Transmission Parts. Inc.

94883A	Snap Ring, 4T80E Holds Forward/Coast Support to Case 1993-Up	1	8680406
94884A	Snap Ring, 4T80E Holds Input Sun Gear to 3rd Clutch Drum 1993-Up	1	8678821
94885A	Snap Ring, 4T80E Holds Final Drive Sun Gear Shaft to Input Planet 1993-Up	1	8678181
94887A	Snap Ring, 4T80E Holds Final Drive Ring Gear to Case 1993-Up	1	8681080
94888A	Snap Ring, 4T80E Holds Park Gear to Final Drive Shaft 1993-Up	1	8678188
94889A	Snap Ring, 4T80E Holds Reaction Ring Gear to Input Planet (Use 94882A) 1993-Up	1	8677619
94890A	Snap Ring, 4T80E Holds Reverse Clutch Retainer in Drum 1993-Up	1	8678731
94892A	Snap Ring, 4T80E Holds Reverse Clutch Pressure Plate in Drum (Use 94878A) 1993-Up	1	8683742
94895A	Snap Ring, 4T80E Holds Output Shaft Front & Rear 1993-Up	2	8685521
94896A	Snap Ring, 4T80E Holds 4th Servo Pin to Piston 1993-Up	1	
94900A	Servo Assembly, 4T80E 4th 1993-Up	1	
94911A	Spring, 4T80E Low/Reverse Servo (Large Spring)	1	
94911B	Spring, 4T80E Low/Reverse Servo Cushion (Small Spring)	1	
94926A	Spring, 4T80E 1-2 Accumulator (Green) Large One	1	
94931A	Spring, 4T80E 2-3 Accumulator (Large) 1993-Up	1	
94931B	Spring, 4T80E 2-3 Accumulator (Small) 1993-Up	1	
94932A	Piston, 4T80E 2-3 Accumulator 1993-Up	1	
94936A	Spring, 4T80E 3-4 Accumulator (Blue)	1	
94937A	Piston, 4T80E 3-4 Accumulator 1994-Up (Sonnax)	1	
94945A	Accumulator Assembly, 4T80E 1-2; 3-4; Forward; & Reverse 1993-Up	1	
94962A	Piston, 4T80E 2nd Clutch (Bonded)(3/4” Wide, Double Wall, For 3 Clutches) 1993-94	1	24207753
94962AA	Piston, 4T80E 2nd Clutch (Bonded)(1/2” Wide, Single Wall, For 4 Clutches) 1995-Up	1	
94964A	Piston, 4T80E Forward Clutch (Aluminum) 1993-Up	1	24205707
94965A	Piston, 4T80E 3rd Clutch (Bonded)(W/2 Ck Balls) 1993-Up	1	24207754
94966A	Piston, 4T80E Reverse Clutch (Aluminum) 1993-Up	1	8678822
94969A	Piston, 4T80E Coast Clutch (Bonded) 1993-Up	1	24207755
94969BK	Piston Set, 4T80E Coast & Forward(W/O-Rings)(Updated) 1993-Up	1	24213271
94972A	Spring & Retainer, 4T80E 2nd Clutch Return 1993-Up	1	24201540
94974A	Spring & Retainer, 4T80E Forward/Coast Clutch Return (12 Springs) 1993-97	1	8684652
94974B	Spring & Retainer, 4T80E Forward/Coast Clutch Return (20 Springs) 1998-99	1	24206276
94975A	Spring & Retainer, 4T80E 3rd Clutch Return 1993-Up	1	8678775
94976A	Spring & Retainer, 4T80E Reverse Clutch Return 1993-Up	1	8682131
94980A	Retainer, 4T80E 2nd Sprag 1993-Up	1	8678727
94985A	Retainer, 4T80E 3rd Clutch Spring 1993-Up	1	8678776
94986A	Retainer, 4T80E Reverse Clutch Spring 1993-Up	1	8678773
94991A	Linkage Assembly, 4T80E Internal 1993-Up	1	
94991AA	Linkage Assembly, 4T80E Internal (15 3/4” Manual Shaft) 1995-Up	1	
94995A	Park Pawl Assembly, 4T80E 1993-Up	1	
94996A	Fitting, 4T80E Cooler Line (W/Stem)(Goes in Case) 1993-Up	1	
94996B	Fitting, 4T80E Cooler Line (W/O Stem)(Goes in Channel Plate) 1993-Up	1	
94999A	Tube, 4T80E Scavenge 1993-Up	1	

© Whatever It Takes Transmission Parts. Inc.

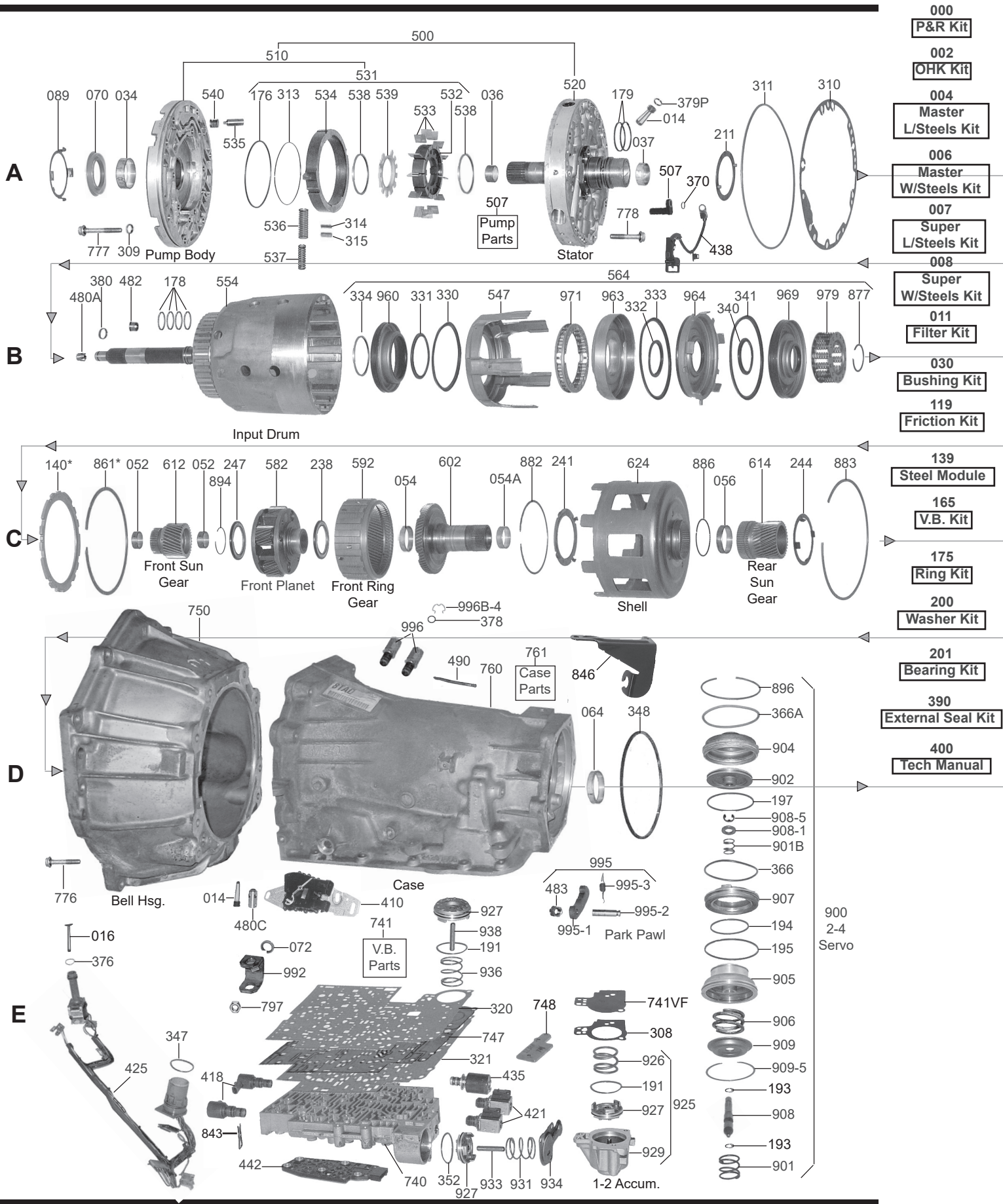

© Whatever It Takes Transmission Parts. Inc.

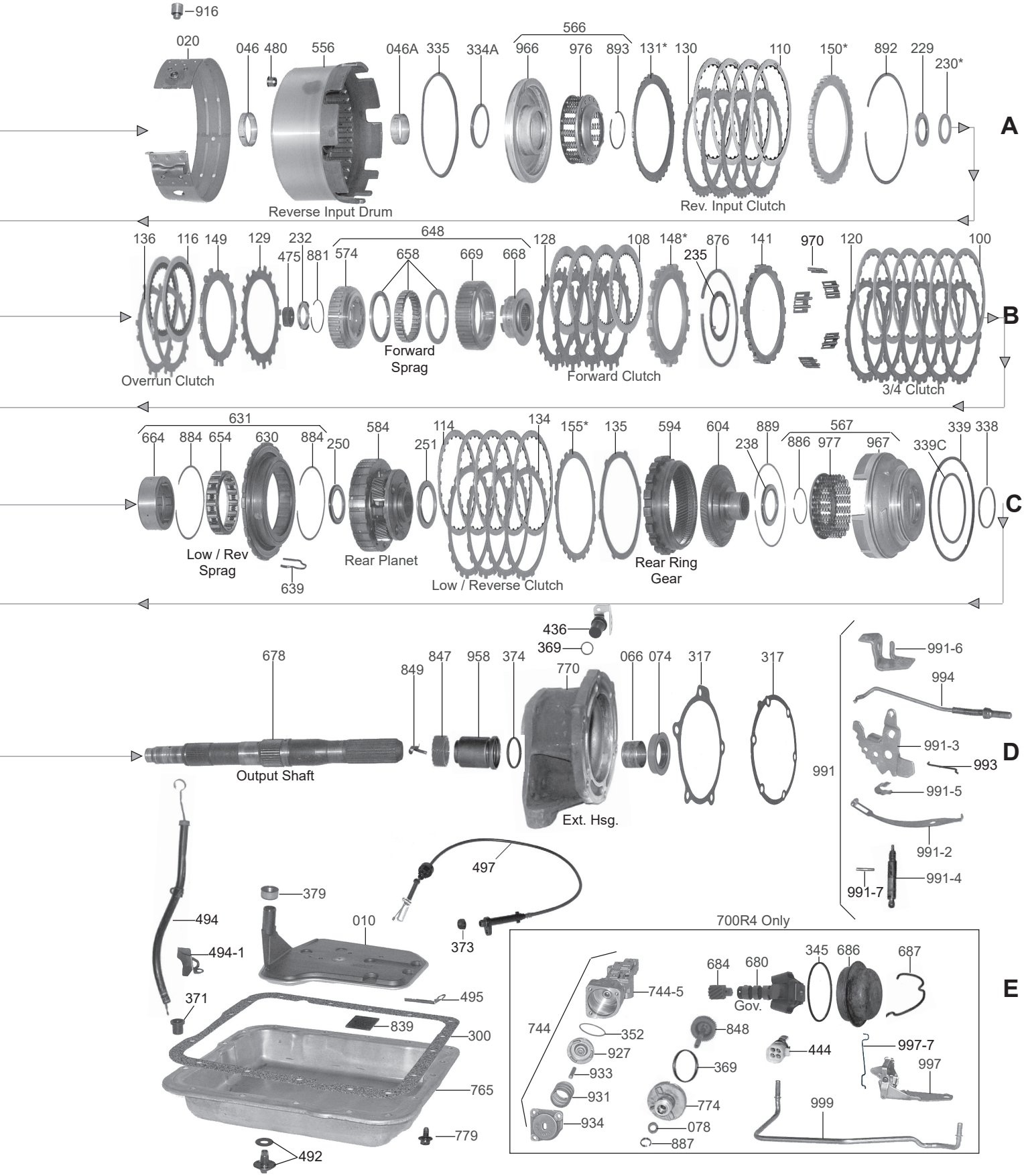

1-800-940-0197

© Whatever It Takes Transmission Parts. Inc.

PART #	PAPER & RUBBER KIT	QTY.	REFERENCE #
74000C	Paper & Rubber Kit, 700R4 1982-Up Combo	1	
74000E	Paper & Rubber Kit, 4L60E 1992-Up	1	

PART #	OVERHAUL KITS	QTY.	REFERENCE #
74002C	Overhaul Kit, 700R4 1982-Up Combo	1	
74002E	Overhaul Kit, 4L60E / 4L65E 1992-03		
74002GA	Overhaul Kit, 4L60E/4L65E (With Wedge Type Pump O-Rings) 2004-Up	1	

PART #	MASTER L/STEEL KIT	QTY.	REFERENCE #
74004	Master L/Steels Kit, 700R4 1982-84	1	
74004A	Master L/Steels Kit, 700R4 1985-E87	1	
74004B	Master L/Steels Kit, 700R4 L1987-Up	1	
74004BH	Master L/Steels Kit, 700R4 L1987-93 (With GPZ100 3-4 Clutch)	1	
74004BZ	Master L/Steels Kit, 700R4 (With Z Pak 3/4 Frictions) L1987-Up	1	
74004E	Master L/Steels Kit, 4L60E (With High Energy 3/4 Frictions .080” Thick) 1992-03	1	
74004EC	Master L/Steels Kit, 4L60E (With Wedge Type Pump O-Ring)(With .080” Thick 3/4 Thick Frictions) 2004-Up	1	
74004ECH	Master L/Steels Kit, 4L60E 2004-Up (With GPZ100 3-4 Clutch)	1	
74004EH	Master L/Steels Kit, 4L60E 1992-03 (With GPZ100 3-4 Clutch)	1	
74004EZ	Master L/Steels Kit, 4L60E / 4L65E (With Z Pak 3/4 Frictions) 1992-03	1	
74004G	Master L/Steels Kit, 4L65E (With High Energy 3/4 Frictions .065” Thick) 2001-03	1	
74004GA	Master L/Steels Kit, 4L65E (With Wedge Type Pump O-Ring)(With .065” Thick 3-4 Frictions) 2004-Up	1	
74004GAZ	Master L/Steels Kit, 4L65E (W/Wedge Type Pump O-Ring)(With Z-Pak 3-4 Frictions) 2004-Up	1	

PART #	MASTER W/STEEL KIT	QTY.	REFERENCE #
74006	Master W/Steels Kit, 700R4 1982-84	1	
74006A	Master W/Steels Kit, 700R4 1985-E87	1	
74006B	Master W/Steels Kit, 700R4 L1987-Up	1	
74006BZ	Master W/Steels Kit, 700R4 (With Z Pak 3/4 Frictions) L1987-Up	1	
74006E	Master W/Steels Kit, 4L60E (With High Energy 3/4 Frictions) 1992-1/4/93	1	
74006EZ	Master W/Steels Kit, 4L60E (With Z Pak 3/4 Frictions) 1992-1/4/93	1	
74006EA	Master W/Steels Kit, 4L60E (With High Energy 3/4 Frictions) 1/5/1993-96	1	
74006EAZ	Master W/Steels Kit, 4L60E (With Z Pak 3/4 Frictions) 1/5/93-1996	1	
74006EB	Master W/Steels Kit, 4L60E (With High Energy 3/4 Frictions .080” & Turbulator Steels) 1997-03 (Will Retro Fit 1/5/1993-03) (For 1999-03 2.2L Add 6-74120 Steels)	1	
74006EBP	Master W/Steels Kit, 4L60E (With .080” Thick 3/4 Frictions)(With Bonded Pistons) 1997-03	1	
74006EBZ	Master W/Steels Kit, 4L60E / 4L65E 1997-03 (W/ Z Pak 3-4 Frictions & Turbulator Steels) (Will Retro Fit 1/5/93-2000)	1	
74006EC	Master W/Steels Kit, 4L60E (With Wedge Type Pump O-Ring)(With .080” Thick 3-4 Frictions) 2004-Up	1	
74006ECP	Master W/Steels Kit, 4L60E (With Wedge Type Pump O-Ring)(With .080” Thick 3/4 Frictions) (With Bonded Pistons) 2004-Up	1	
74006G	Master W/Steels Kit, 4L65E (With High Energy 3/4 Frictions .065” Thick & Turbulator Steels 2001-03	1	
74006GP	Master W/Steels KIt, 4L65E (With O-Ring & Wedge Type Pump O-Ring)(With .065” Thick 3-4 Frictions)(With Bonded Pistons) 2001-Up	1	
74006GA	Master W/Steels Kit, 4L65E (With Wedge Type Pump O-Ring)(With .065” Thick 3-4 Frictions) 2004-Up	1	
74006GAP	Master W/Steels Kit, 4L65E (With Wedge Type Pump O-Ring)(With .065” Thick 6-4 Frictions) (With Bonded Pistons) 2004-Up	1	
74006GAZ	Master W/Steels Kit, 4L65E (W/Wedge Type Pump O-Ring)(With Z-Pak 3-4 Frictions) 2004-Up	1	

PART #	SUPER L/STEEL KIT	QTY.	REFERENCE #
74007	Super L/Steels Kit, 700R4 1982-84	1	
74007A	Super L/Steels Kit, 700R4 1985-E87	1	
74007B	Super L/Steels Kit, 700R4 L1987-Up	1	
74007E	Super L/Steels Kit, 4L60E 1992-96	1	

PART #	SUPER W/STEEL KIT	QTY.	REFERENCE #
74008B	Super W/Steels Kit, 700R4 L1987-Up	1	

© Whatever It Takes Transmission Parts. Inc.

PART #	FILTER	QTY.	REFERENCE #
74010	Filter, 700R4 (Wide) 1982-91	1	8667689
54010B	Filter, 700R4 (Narrow, Early) 1982	1	
74010E	Filter, 4L60E 1992-96	1	8685774
74010EA	Filter, 4L60E (Corvette, Deep Sump) 1997-Up	1	24208149
74010EB	Filter, 4L60E (Except Deep Pan) 1997-Up (With Serial Filtration)(Will Retro Fit Back To 1993) (This Filter Looks Identical To 74010E Except For The “S” With A Circle Stamped On The Metal)	1	24208148
74010EC	Filter, 4L60E/4L65E (Deep Pan, Truck & Van) 1997-03 (1/2 Plastic & 1/2 Metal) Will Replace The All Plastic Filter	1	24208465
74010ED	Filter, 4L60E/4L65E (Deep Pan, Truck & Van) 2004-Up (Plastic) (All Except Colorado/Canyon 4x4 2004-07; Hummer H3 2006-07; Isuzu 4x4 2004-07)(Will Retro Fit To 1997)	1	
74010EE	Filter, 4L60E/4L65E 4x4 (Colorado/Canyon 2004-07; Hummer H3 2006-07; Isuzu 4x4 2004-07)	1	
74010H	Filter, 4L60E Hybrid	1	

PART #	FILTER KIT	QTY.	REFERENCE #
74011	Filter Kit, 700R4 (Wide) 1982-91	1	
74011B	Filter Kit, 700R4 (Narrow, Early) 1982	1	
74011E	Filter Kit, 4L60E (Except Deep Pan & Corvette) 1992-96	1	
74011EA	Filter Kit, 4L60E (Corvette, Deep Sump) 1997-Up	1	
74011EB	Filter Kit, 4L60E W/Serial Filtration (All Cars Except Corvette) 1997-Up (Will Retro Fit to 1983)	1	
74011EC	Filter Kit, 4L60E/4L65E (Deep Pan, Trucks, & Vans) 1997-03	1	

PART #	MISC. FILTERS	QTY.	REFERENCE #
44014	Screen, 700R4 Governor And Torque Converter Clutch 1982-Up	2	8642423
74014	Screen, 700R4/4L60E/4L65E/4L70E Pump 1982-Up	1	8642036
74016A	Filter, 4L60E/4L65E/4L70E Shift Solenoid (Small Rectangular) (Snaps on Valve Body Plate)	1	8683769
74016P	Filter, 4L60E/4L65E/4L70E Pressure Control Solenoid (Large Rectangular) (Snaps on Valve Body Plate)	1	24109145
74495C	Filter Clip, 700R4 Holds Filter in Place	1	8647298

PART #	BANDS	QTY.	REFERENCE #
74020A	Band, 700R4/4L60E/4L65E 1982-Up	1	8673175
74020AH	Band, 700R4/4L60E/4L65E (Hi-Energy) 1982-Up	1	
74020AHP	Band, 700R4/4L60E (2 Tang) High Energy Carbon 1985-Up	1	
74020AK	Band, 700R4/4L60E/4L65E (W/Kevlar Lining) 1982-Up	1	
74020BAHK	Band, 700R4/4L60E/4L65E (2 5/8” Wide)(With Kevlar Lining) 1982-Up (Hi-Performance Racing)(New Alabama Bands)	1	
74020BAHP	Band, 700R4/4L60E/4L65E (2 5/8” Wide)(With Carbon Lining) 1982-Up (Hi-Performance Racing) (New Alabama Bands)	1	
74020BHP	Band, 700R4/4L60E/4L65E (2 5/8” Wide)(Red Eagle Lining) 1982-Up (Alto) “Powerband”	1	
74020BHPK	Band, 700R4/4L60E (2 Tang) Wide (2 5/8” Kevlar Lined) 1985-Up (Alto) “Powerband”	1	

PART #	BUSHINGS	QTY.	REFERENCE #
74030	Bushing Kit, 700R4/4L60E (27 & 30 Spline Input Shaft) 1982-Up	1	
74030E	Bushing Kit, 4L60E (With Teflon Coated Pump And Extension Housing Bushing)(12 Pieces) 1994-Up	1	
74034	Bushing, 700R4/4L60E Pump Body (Babbit) 1982-Up	1	8687987
74034A	Bushing, 700R4/4L60E Pump Body (Bronze) 1982-Up	1	
T54034A	Bushing, 700R4/4L60E Pump Body (Sure Seal) 1982-Up (Teckpak)	1	
74034B	Bushing, 700R4/4L60E Pump Body (Dura-Life Special) 1982-Up	1	
74034BA	Bushing, 700R4/4L60E Pump Body (Split)(Teflon Coated) 1982-Up	1	
74034D	Bushing, 700R4/4L60E Pump Body (Enhanced W/CT-101 Dry Lubricant)(W/Indents For Better Oil Retention) 1982-Up	1	
54036A	Bushing, 700R4 Stator (Front) .900”ID	1	8628915
44036	Bushing, 700R4/4L60E Stator (Front) 1982-Up	1	
44036B	Bushing, 700R4/4L60E Stator (Front)(Large Shaft)(1.000”ID)	1	8641073
S44036B	Bushing, 700R4/4L60E Stator (Front) 1.000”ID (30 Spline Input Shaft)(Sonnax)	1	
74037	Bushing, 700R4/4L60E Stator (Rear) (Narrow) (.433” Wide) 1982-91	1	8642904
74037A	Bushing, 4L60E Stator (Rear) (Wide) (.470” Wide) 1992-Up (Has 4 Narrow Grooves)	1	
S74037AT	Bushing, 4L60E Stator (Rear)(Wide)(.470”Wide)(Teflon Line On The Inside) 1992-Up (Sonnax)	1	
74037C	Bushing, 700R4/4L60E Stator (Rear)(Narrow)(.420”Wide)		
74046	Bushing, 700R4/4L60E Reverse Drum (Front) 1982-Up	1	8642905
54046A	Bushing, 700R4/4L60E Reverse Drum (Rear) (1.880”OD) 1982-Up	1	8628917
74052	Bushing, 700R4/4L60E Input Sun Gear 1982-Up	2	8642181
74054	Bushing, 700R4/4L60E Reaction Shaft (Front)(1.505”ID) 1982-Up	1	8642908
74054A	Bushing, 700R4/4L60E Reaction Shaft (Rear)(1.210”ID) 1982-Up	1	8642907

© Whatever It Takes Transmission Parts. Inc.

PART #	BUSHINGS (Continued)	QTY.	REFERENCE #
74054B	Bushing, 700R4/4L60E Reaction Shaft (Front) 1982-Up		
74056	Bushing, 700R4/4L60E Rear Sun Gear 1982-Up	1	8642909
S74056B	Bushing, 700R4/4L60E Rear Sun Gear (Wide) (Sonnax)	1	
44064	Bushing, 700R4/4L60E Case (Babbit) 1982-Up	1	
74064	Bushing, 700R4/4L60E Case (Bronze) 1982-Up	1	8641118
S74064B	Bushing, 700R4/4L60E Case (Oversize) (Sonnax)	1	
24066	Bushing, 700R4/4L60E/4L65E/4L70E Extention Housing (Plain) 1989-Up	1	
44066	Bushing, 700R4/4L60E Extension Housing (1.500"ID)(Babbit) 1982-Up	1	6260048
44066B	Bushing, 700R4/4L60E Extension Housing (1.500"ID)(Bronze) 1982-Up	1	3717682
24066C	Bushing, 700R4/4L60E/4L65E/4L70E Extention Housing (Coated) 1989-Up	1	
74066T	Bushing, 4L60E Extension Housing (Teflon Coated) 1994-Up	1	

PART #	METAL CLAD SEALS	QTY.	REFERENCE #
74070	Seal, 700R4/4L60E Front 1982-Up	1	8648394
44072	Seal, 700R4/4L60E Linkage Shaft 1982-Up	1	8623056
44074	Seal, 700R4/4L60E Rear 1982-Up	1	1243402
44074C	Seal, 700R4/4L60E Rear (With Flange) Without Boot	1	
74074E	Seal, 4L60E Rear (W/Boot) 1996-Up (Use 44074C)	1	24204540
74074EA	Seal, 4L60E (Corvette) Rear Case 1997-Up	1	
74074EC	Seal, 4L60E (4x4) Rear (2.362"OD)(1.575"ID) 2004-Up (Fits Colorado/Canyon 4x4 3.5L 2004-Up)	1	
T44075	Seal, 700R4/4L60E Drive Shaft Yoke Seal (Teckpak)	1	
T44075K	Yoke Seal Tool Kit & Shaft Yoke & Installation Tool (Techpak)	1	
44078X	Seal, 700R4 Speed-O Shaft 1982-Up	1	1240382
S74080	Seal, 700R4/4L60E 2nd Apply Servo Piston (5 Per Bag) (Viton) (Piston Must be Machined) (Sonnax)	1	
74089	Retainer, 700R4/4L60E (Front Seal Lock) (Metal) 1982-Up	1	8654491

PART #	FRICTION CLUTCH	QTY.	REFERENCE #
74100	Friction, 700R4/4L60E 3/4 Clutch .080" 1982-Up	6	8642144
74100A	Friction, 700R4/4L60E 3/4 Clutch .080" (Hi-Energy Eclipse) 1992-Up	6	8679390
74100AH	Friction, 700R4/4L60E 3/4 Clutch .080" (GPZ100)(Heavy Duty) 1982-Up	6	
74100C	Friction, 700R4/4L60E 3/4 Clutch .062" (Commercial) (Tan) 1982-Up	AR	
74100CA	Friction, 700R4/4L60E 3/4 Clutch .062" (Commercial) (Hi-Energy) 1982-Up	AR	
74100CHP	Friction, 700R4/4L60E 3/4 Clutch (.062") (Hi-Performance)	6	
A74100CHPK	Friction Kit, 700R4/4L60E 3/4 Clutch .062" (Commercial) (Hi-Perf) (9 Per Kit) 1982-Up (Allomatic)	1	
A74100CPK	Friction/Steel Kit, 700R4/4L60E 3/4 Clutch .062"(Commercial)(Tan W/P. Plate)1982-Up(Alto)	1	
A74100CPPK	Friction/Steel Kit, 700R4/4L60E 3/4 Clutch .062"(Commercial) (Hi-Perf) (Red W/Pressure Plate) 1982-Up (Alto)	1	
74100CS1	Friction, 700R4/4L60E 3/4 Clutch (.062")(Stage 1)	6	
74100D	Friction, 4L60E 3/4 Clutch (.062") (Hi-Energy Eclipse) 1982-Up	AR	
74100G	Friction, 4L65E 3/4 Clutch (.065") (Hi-Energy) 2001-Up	AR	
74100GH	Friction, 4L65E/4L70E 3/4 Clutch (.065")(GPZ Material)(Heavy Duty) 2001-Up	AR	
A74100HPK	Friction Kit, 700R4/4L60E 3/4 Clutch .080" (Hi-Perf) (6 Per Kit) 1982-Up (Alto)	1	
74100ZPK	Friction & Steel Kit, 700R4/4L60E/4L65E 3/4 Clutch ("Z Pak") (Extreme Duty) 1982-Up	1	
74108	Friction, 700R4 Forward Clutch .078" 1982-84	5	8647350
74108A	Friction, 700R4/4L60E Forward Clutch .070" 1985-Up	5	8654324
74108AHP	Friction, 700R4/4L60E Forward Clutch .070" (Hi-Perf) 1985-Up	5	
A74108AHPK	Friction Kit, 700R4/4L60E Forward Clutch (.070")(Hi-Perf) 1985-Up (Alto)(5 Per Kit)	1	
A74108HPK	Friction Kit, 700R4 Forward Clutch .078" (Hi-Perf) (5 Per Kit) 1985-Up (Alto)	1	
74110	Friction, 700R4 Reverse Input Clutch .078" 1982-E87	4	8654306
74110A	Friction, 700R4/4L60E Reverse Input Clutch .070" L1987-UP	4	
74110AHP	Friction, 700R4/4L60E Reverse Input Clutch .070" (Hi-Perf) L1987-Up	4	
A74110HPK	Friction Kit, 700R4/4L60E Reverse Input Clutch .078" (Hi-Perf) (4 Per Kit) 1982-E87 (Alto)	1	
74114	Friction, 700R4/4L60E Low/Reverse Clutch .087" 1982-Up	5	8681813
74114HP	Friction, 700R4/4L60E Low/Reverse Clutch .087" (Hi-Perf) 1982-Up	5	8673253
A74114HPK	Friction Kit, 700R4/4L60E Low/Reverse Clutch .087" (Hi-Perf) (5 Per Kit) 1982-Up (Alto)	1	8678054
74116	Friction, 700R4/4L60E Overrun Clutch .078" 1982-Up	2	
74116HP	Friction, 700R4/4L60E Overrun Clutch .078" (Hi-Perf) 1982-Up	2	
A74116HPK	Friction Kit, 700R4/4L60E Overrun Clutch .078" (Hi-Perf) (2 Per Kit) 1982-Up (Alto)	1	
74119	Friction Module, 700R4 1982-84	1	
74119HP	Friction Module, 700R4 (Hi-Performance) Indy Reds (Allomatic) 1982-84	1	
74119A	Friction Module, 700R4 1985-E87	1	
A74119AHP	Friction Module, 700R4 (Hi Performance, Indy Reds) 1985-E87 (Allomatic)	1	
74119B	Friction Module, 700R4/4L60E L1987-Up (With .080" Thick 3-4 Frictions)	1	

© Whatever It Takes Transmission Parts. Inc.

74119BA ..... Friction Module, 700R4/4L60E L1987-Up (With .080" Thick 3-4 Frictions)(With High Energy Frictions) 1
74119BH ..... Friction Module, 700R4/4L60E L1987-Up (With .080" Thick GPZ100 3-4 Frictions) 1
A74119BHP .... Friction Module, 700R4 (Hi-Performance, Indy Reds) L1987-Up (Allomatic) 1
74119BHP ..... Friction Module, 700R4/4L60E L 1987-Up (W/.080"Thick 3-4 Friction)(W/ High Performance Waved Frictions) 1
74119BS1 ..... Friction Module, 700R4/4L60E (Stage 1) L1987-Up 1
74119BZ ..... Friction Module, 700R4/4L60E/4L65E (With Z Pak 3/4 Frictions) L1987-Up 1
74119BZS1 ..... Friction Module, 700R4/4L60E/4L65E (Stage 1)(With Z-Pak 3-4 Frictions) L1987-Up 1
74119G ..... Friction Module, 4L65E (With .065" Thick 3/4 Frictions) 2001-Up 1
74119GHP ..... Friction Module, 4L65E (With .065" Thick 3/4 Clu Frictions) 2001-Up (With High Performance Waved Frictions) 1

PART #	STEEL CLUTCH	QTY.	REFERENCE #
74120	Steel, 700R4 3/4 Clutch .077" 1982-E87 (Can Use 74120A)	5	8678054
74120HP	Steel, 700R4 3/4 Clutch .077" (Kolene) (Hi-Performance)	5	
74120HPK	Steel Kit, 700R4 3/4 Clutch .077" (Kolene) (Hi-Performance)	1	
74120A	Steel, 700R4/4L60E 3/4 Clutch .076" L1987-1/4/93 (W/Notch)	5	8671900
74120B	Steel, 700R4/4L60E 3/4 Clutch .060" (Commercial) (W/Notch)	AR	
74120BHP	Steel, 700R4/4L60E 3/4 Clutch .060" (Kolene) (Hi-Performance)	AR	
74120BHPK	Steel Kit, 700R4/4L60E 3/4 Clutch .060" (Kolene) (Hi-Performance) (10 Per Kit)	1	
74120C	Steel, 4L60E 3/4 Clutch (.106") 1/5/93-Up	5	24207604
74120CA	Steel, 4L60E 3/4 Clutch (.106") (With Special Finish) 1/5/93-Up	3-5	
74120CAHP	Steel, 4L60E 3/4 Clutch (.106") 1/5/1993-Up (Kolene)	3-5	
74120D	Steel, 700R4/4L60E 3/4 Clutch (.050) 15 Notches	1	
74120G	Steel, 4L60E/4L65E 3/4 Clutch (.095")(Lindered) 2001-Up	AR	
74120GA	Steel, 4L60E/4L65E 3/4 Clutch (.095")(Without Coating) 2001-Up	1	
74128	Steel, 700R4 Forward Clutch (.078") 1982-84	4	8642167
74128HPK	Steel Kit, 700R4 Forward Clutch .078" (Kolene)(Hi-Performance)	1	
74128A	Steel, 700R4/4L60E Forward Clutch .090" 1985-Up	4-5	8654325
74128AHP	Steel, 700R4/4L60E Forward Clutch (.090")(Kolene)(High Performance) 1985-Up	4-5	
74129	Steel, 700R4/4L60E Forward Clutch .070" (Waved) 1982-Up	1	24203903
74129A	Steel, 4L60E Forward Clutch .050" Thick (Waved) 1995-Up	1	
74130	Steel, 700R4/4L60E Reverse Input Clutch .078" 1982-97	4	8673601
74130A	Steel, 700R4/4L60E Reverse Input Clutch .090" 1982-97	AR	
74130B	Steel, 4L60E Reverse Input Clutch (.078") (Turbulator) 1997-Up	4	24205267
74130BA	Steel, 4L60E Reverse Input Clutch (.090") (Turbulator) 1997-Up	4	
74130HPK	Steel Kit, 700R4/4L60E Reverse Input Clutch (.078")(Kolene)(Hi-Perf) 1982-97 (4 Per Kit)	1	
74131	Steel, 700R4 Reverse Input Clutch .088" (Waved) 1982-84	1	8642060
74131A	Steel, 700R4 Reverse Input Clutch .080" (Waved) 1985-E87	1	8647067
74131B	Steel, 700R4/4L60E Reverse Input Clutch .088" (Dished) L1987-96	1	8663074
74131BK	Waved Spring/Plate Kit, 400R4/4L60E Reverse Input (Drum Saver) (Replaces Dished Steel) (Saves The Reverse Input Drum When The Dished Steel Has Worn Into The Drum) (Alto)	1	
74131C	Steel, 700R4/4L60E Reverse Input Clutch .051" (Dished) L1987-Up	1	
74131D	Steel, 700R4/4L60E Reverse Input Clutch .071" (Dished) L1987-Up	1	
44134	Steel, 700R4/4L60E Low/Reverse Clutch .068" Thick 1982-96	5	6261120
44134HP	Steel, 700R4/4L60E Low/Reverse Clutch .086" Thick (Kolene) 1982-Up	5	
44134X	Steel, 700R4/4L60E Low/Reverse Clutch .080" Thick (Oversize) 1982-Up	AR	
74134B	Steel, 4L60E Low/Reverse Clutch .049" (Turbulator) 1997-Up	AR	24205269
74134BA	Steel, 4L60E Low/Reverse Clutch .067" (Turbulator) 1997-Up	AR	24205268
74134BB	Steel, 4L60E Low/Reverse Clutch .089" (Turbulator) 1997-Up	AR	2425270
74135	Steel, 700R4/4L60E Low/Reverse Clutch (Waved) 1987-97	1	
74136	Steel, 700R4/4L60E Overrun Clutch .092" 1982-Up	2	8642154
74136HPK	Steel Kit, 700R4/4L60E Overrun Clutch .092" (Kolene) (Hi-Performance) 1982-Up (2 Per Kit)	1	
74137CPPK	Friction/Steel Module, 700R4/4L60E (Red Frictions And Kolene Steels) 1987-Up (Alto)	1	
74139	Steel Module, 700R4 1982-84	1	
74139A	Steel Module, 700R4 1985-92	1	
74139B	Steel Module, 700R4 L1987-Up	1	
74139BHP	Steel Module, 700R4 (Kolene) 1987-Up	1	
74139EA	Steel Module, 4L60E 1/5/93-Up	1	
74139EB	Steel Module, 4L60E With Turbo Steels 1997-Up	1	
74139G	Steel Module, 4L65E 2001-Up	1	

PART #	CLUTCH PRESSURE PLATES	QTY.	REFERENCE #
74140A	Pressure Plate, 700R4 3/4 Clutch 7.0-7.25MM (.275") Cast # 1 1982-86	1	8642621
74140B	Pressure Plate, 700R4 3/4 Clutch 6.0-6.25MM (.227") Cast # 2 1982-86 (Can Use 74140F Or 74140JA)	1	24213589
74140C	Pressure Plate, 700R4 3/4 Clutch 5.0-5.25MM (.192") Cast # 3 1982-86 (Can Use 74140G Or 74140JB)	1	8642623

© Whatever It Takes Transmission Parts. Inc.

PART #	CLUTCH PRESSURE PLATES (Continued)	QTY.	REFERENCE #
74140D	Pressure Plate, 700R4 3/4 Clutch 4.0-4.25MM (.157") Cast # 4 1982-86 (Can Use 74140H Or 74140JC)	1	24213591
74140E	Pressure Plate, 700R4/4L60E 3/4 Clutch 6.48MM (.255") 1987-1/4/93 (Can Use 74140J)	1	8667535
74140EK	Backing Plate Kit, 4L60,4L60E,4L65-E,4L70-E 3-4 Clutch (Heavy Duty)(Contains: Backing Plate & Apply Plate)(Sonnax)(Designed For Use With GM High Energy Clutch Pack With 7 .067" Friction & 6 .095" Steels)(Requires 1991-Up 3-4 Apply Ring Stamped With #7)	1	
74140F	Pressure Plate, 700R4/4L60E 3/4 Clutch 5.65MM (.222") 1987-1/4/93 (Can Use 74140B Or 74140JA)	1	8667536
74140G	Pressure Plate, 700R4/4L60E 3/4 Clutch 4.82MM (.190") 1987-1/4/93 (Can Use 74140C Or 74140JB)	1	8667357
74140H	Pressure Plate, 700R4/4L60E 3/4 Clutch 3.99MM (.157") 1987-1/4/93 (Can Use 74140D Or 74140JC)	1	8667538
74140J	Pressure Plate, 4L60E 3/4 Clutch 6.48MM (.255") 1/5/93-Up (Can Use 74140E)	1	8682872
74140JA	Pressure Plate, 4L60E 3/4 Clutch 5.77MM (.227") Cast # A 1/5/93-Up (Can Use 74140B Or 74140F)	1	24212461
74140JB	Pressure Plate, 4L60E 3/5 Clutch 4.88MM (.192") Cast # B 1/5/93-Up (Can Use 74140C Or 74140G)	1	24212460
74140JC	Pressure Plate, 4L60E 3/4 Clutch 3.99MM (.157") Cast # C 1/5/93-Up (Can Use 74140D Or 74140H)	1	24212459
74141A	Apply Plate, 700R4 3/4 Clutch (1.30") (Flat) 1982-86	1	8642172
74141AA	Apply Plate, 700R4/4L60E 3/4 Clutch (Stepped) 1992	1	8676379
74141B	Apply Plate, 4L60E 3/4 Clutch (.225") (5 Legs) Cast # C 1992-Up	1	8685044
74141BA	Apply Plate, 4L60E 3-4 Clutch (.213") (5 Legs) (Cast #C) 1992-Up	1	
74148	Pressure Plate, 700R4 Forward Clutch 6.75MM 1982-86	1	8642169
74148A	Pressure Plate, 700R4/4L60E Forward Clutch 5.26MM 1987-Up	1	8667670
74148AA	Pressure Plate, 700R4/4L60E Forward Clutch 4.65MM 1987-Up	1	8667671
74148AB	Pressure Plate, 700R4/4L60E Forward Clutch 4.32MM 1987-Up	1	
74148B	Pressure Plate, 700R4/4L60E Forward Clutch 5.87MM 1987-Up	1	24212468
74148C	Pressure Plate, 700R4/4L60E Forward Clutch 6.43MM 1987-Up	1	24212469
74148D	Pressure Plate, 700R4/4L60E Forward Clutch 7.04MM 1987-Up	1	8682867
74148G	Pressure Plate, 4L60E Forward Clutch 5.60MM 1997-Up	1	
74149	Apply Plate, 700R4 Forward Clutch 6.44MM 1982-86	1	8642163
74149A	Spacer Plate, 700R4 Forward Clutch (Aluminum) 1982-Up	1	8642164
74149AB	Apply Plate, 700R4/4L60E Forward Clutch (3.60mm) 1987-Up	1	
74149B	Apply Plate, 700R4/4L60E Forward Clutch 4.32MM 1987-Up	1	24212462
74150A	Pressure Plate, 700R4/4L60E Reverse Input Clutch .230" L1987-Up	1	8682865
74150B	Pressure Plate, 700R4/4L60E Reverse Input Clutch .240" L1987-Up	1	8682864
74150C	Pressure Plate, 700R4/4L60E Reverse Input Clutch .260" L1987-Up	1	8673603
74150CA	Pressure Plate, 700R4/4L60E Reverse Input Clutch .270" L1987-Up	1	
74150CB	Pressure Plate, 700R4/4L60E Reverse Input Clutch .280" L1987-Up	1	
74150D	Pressure Plate, 700R4/4L60E Reverse Input Clutch .290" L1987-Up	1	8682863
74155	Spacer Plate, 700R4 Low/Reverse Clutch .125" 1987-89	1	8667585
74155A	Spacer Plate, 700R4/4L60E Low/Reverse Clutch .049" 1990-Up	1	8673548
74155B	Spacer Plate, 700R4/4L60E Low/Reverse Clutch .089" 1990-Up	1	8673549
74155C	Spacer Plate, 700R4 Low/Reverse Clutch .095" 1987-89	1	8667584

PART #	VALVE BODY KITS	QTY.	REFERENCE #
A74165	Valve Body Kit, 700R4 (Transcel)	1	
S74165	Valve Body Kit, 700R4 (Superior)	1	K700R4
T74165	Shift Kit, 700R4 (Senior) 1983-93 (Transgo)	1	SK-700
T74165A	Converter Valve Kit, 700R4 Non-Lock-Up Pump Conversion 1982-93 (Transgo)	1	7-CCV
T74165B	Pump Ring Kit, 700R4/4L60E 1982-Up (Transgo)(2 Rings & 2 Springs)	1	700-PK
T74165C	Conversion Valve Kit, 4L60E Non-Lock-Up Pump Conversion 1993-Up (Transgo)	1	4L6-CCV
T74165CA	Lock-Up Kit, 700R4 Hydraulic Lock-Up (Transgo)	1	
A74165E	Valve Body Kit, 4L60E 1991-06 (Ratiotek "Intelligent Service Package")(Transcel)	1	
S74165E	Valve Body Kit, 4L60E (Superior) 1993-97	1	K4L60E
T74165E	Shift Kit, 4L60E 1993-Up (Transgo)	1	SK-4L60E
S74165EL	Valve Body Kit, 4L60E 1998-Up (Superior)	1	
S74165ELV	Valve Body Kit, 4L60E (With Steel Boost Valve & Sleeve) 1993-97 (Superior)	1	
S74165ES	Valve Body Kit, 4L60E (W/Steel Boost Valve & Sleeve) 1993-97 (Superior)	1	K4L60-E-V
T74165HP	Pump Ring Kit, 700R4/4L60E (Hi-Perforfmance) 1982-Up (Transgo)	1	700PKH
S74165S	Valve Body Kit, 700R4 (W/Steel Boost Valve & Sleeve) 1982-93 (Superior)	1	K700-R4-V
T74167	Shift Kit, 700R4 (Junior) 1986-93 (Transgo)	1	SK-700-JR
A74169	Valve Body Kit, 700R4 (High Performance)(RatioTek)(Transcel)	1	
A74169E	Valve Body Kit, 4L60E 1991-06 (Hot Rods)(RatioTek "Intelligent Service Package")(Transcel)	1	
A74169EA	Valve Body Kit, 4L60E/4L65E/4L70E Powertow (Heavy Duty) 1996-05 (Fairbanks)	1	

© Whatever It Takes Transmission Parts. Inc.

T74169EA	Valve Body Kit, 4L60E Reprogramming Kit, Heavy Duty Or High Performance Units With Gear Command Option 1996-16 (TransGo)	1	
A74171	Transaction Kit, 700R4 1982-93 (Hi-Performance) (Fairbanks)	1	700015
S74171	Valve Body Kit, 700R4 (Hi-Performance) (Superior)	1	K700R4-HP
T74171	Shift Kit, 700R4 (Hi-Performance & Heavy Duty/Manual) 1982-93 (Transgo)	1	700-2&3
T74171E	Shift Kit, 4L60E (Hi-Performance & Heavy Duty/Sport Truck) 1993-Up (Transgo)	1	4L60E-HD2
T74173E	Shift Kit, 4L60E (Full Race, Manual Shift) 1993-Up (Transgo)	1	4L60E-3
T74431A	Vaccum Pressure Control Kit, 4L60E 1993-Up (Transgo+D256)	1	46-MOD
A74971K	Spring Kit, 700R4/4L60E 3-4 Clutch (Transgo)	1	7-CS

PART #	OIL SEALING RINGS	QTY.	REFERENCE #
74175T	Ring Kit, 700R4/4L60E Combo (Teflon) 1982-Up	1	
74175BT	Ring Kit, 4L60E (Teflon) 1992-Up	1	
54176B	Ring, 700R4/4L60E Pump Slide to Body (Metal)	1	8634079
74178	Ring, 700R4 Turbine Shaft (Metal) 1982-91	4	
74178T	Ring, 700R4/4L60E Turbine Shaft (Stepped Cut, Teflon) 1982-91	4	8642420
74178AT	Ring, 700R4/4L60E Turbine Shaft (Solid, Teflon, & White) 1982-91	4	8667035
74178BT	Ring, 700R4/4L60E Turbine Shaft (Stepped Cut, Teflon) 1992-Up	4	
54179AT	Ring, 700R4 Stator (Teflon) 1982-91	2	8628055
74179BT	Ring, 4L60E Stator (Solid, Teflon) 1992-Up	2	8681292
74179CT	Ring, 4L60E Stator (Solid, Teflon W/Graphite, Black) 1992-Up	2	
54191AT	Ring, 700R4 Accumulator (Teflon) (Replaced By # 54352A Rubber)	2	8634161
54352A	Seal, 700R4/4L60E 1-2 & 3-4 Accumulator (Rubber, Replaces Teflon # 54191AT)	2	8635568
54193BT	Ring, 700R4 Intermediate Band Apply Pin (Teflon)	2	8630120
74194AT	Ring, 700R4/4L60E 2nd Apply Piston (Inner) 2.312” (Teflon)	1	8642458
74194DT	Ring, 700R4/4L60E 2nd Apply Piston (Inner) 2.520” (Teflon)	1	8642459
74194T	Ring, 700R4/4L60E 2nd Apply Piston (Inner) 1.793” (Teflon)	1	8642084
74365AK	D-Ring Kit, 700R4/4L60E Servo (Viton) (Replaces Teflon) 1986-Up	1	
74195T	Ring, 700R4/4L60E 2nd Apply Piston (Outer) (Teflon)	1	8642081
74197T	Ring, 700R4/4L60E 4th Apply Piston (Outer) (Teflon)	1	8642480

PART #	WASHERS & BEARINGS	QTY.	REFERENCE #
74200	Washer Kit, 700R4/4L60E	1	
74201A	Bearing Kit, 700R4/4L60E (Torrington)(5 Pieces) 1982-03 (Contains: 1 #229, 1 #232, 2 #238 & 1 #251)	1	
74211	Washer, 700R4/4L60E Stator to Reverse Input Drum (.063” Thick)	1	8642041
74211B	Washer, 700R4/4L60E Stator To Reverse Input Drum (.132” Thick)(This Aftermarket Washer Is Thicker To Take Up Clearance)	1	
74229	Bearing, 700R4/4L60E Stator to Input Drum	1	8642066
S74229SK	Shim Kit, 700R4/4L60E Stator (10 Per Kit) (Sonnax)	1	
74230	Washer, 700R4/4L60E Input Drum 1.87-1.97MM (#67)	1	8642067
74230A	Washer, 700R4/4L60E Input Drum 2.04-2.14MM (#68)	1	8642068
74230B	Washer, 700R4/4L60E Input Drum 2.21-2.31MM (#69)	1	8642069
74230C	Washer, 700R4/4L60E Input Drum 2.38-2.48MM (#70)	1	8642070
74230D	Washer, 700R4/4L60E Input Drum 2.55-2.65MM (#71)	1	8642071
74230E	Washer, 700R4/4L60E Input Drum 2.72-2.82MM (#72)	1	8642072
74230F	Washer, 700R4/4L60E Input Drum 2.89-2.99MM (#73)	1	8642073
74230G	Washer, 700R4/4L60E Input Drum 3.06-3.16MM (#74)	1	8642074
74232	Bearing, 700R4/4L60E Input Drum to Sun Gear	1	8642162
74235	Washer, 700R4 Input Carrier to Race (Plastic) 1982-85	1	8642095
74238	Bearing W/Races, 700R4/4L60E/4L65E Front Planet to Reaction Shaft (.141” Thick)(2.457”OD) (1.694”ID) 1982-03 (Also Fits 700R4/4L60E/4L65E Rear to Hub Case 1982-03)	2	8642191
74238A	Bearing W/Races, 4L60E/4L65E Front Planet To Reaction Shaft (.141” Thick)(2.531”OD) (1.683”ID) 2004-Up (Also Fits 4L60E/4L65E Rear Hub To Case 2004-Up)	2	
74238GA	Bearing W/Races, 4L60E/4L65E/4L70E Front Planet To Reaction Shaft (.242” Thick With Angled Outer Lip)(2.502”OD)(1.662”ID) 2004-Up (This Fits The Updated 5 Gear Planet # 582GA & Hub # 602GA)	1	
74241	Washer, 700R4/4L60E Reaction Sun Shell (Front) 1982-Up	1	8642202
74241B	Bearing W/Races, 4L60E/4L65E Reaction Sun Shell (Front)(Has No Inner Tabs) 2002-Up	1	
74241BA	Bearing W/Races, 4L60E/4L65E Reaction Sun Shaell (Front)(Has 3 Inner Tabs To Lock Bearing On To The 74602BA Hub) 2002-Up	1	
44244A	Washer, 700R4/4L60E Sun Shell (Rear) 4 Flat Tabs (Plastic) 1982-Up	1	8642331
74244B	Washer, 700R4/4L60E Sun Shell (Rear) 4 Round Tabs (Plastic) (Fits “The Beast” Shell Only)	1	
74247	Bearing, 700R4/4L60E Front Planet to Front Sun Gear	1	
S74250	Bearing, 700R4/4L60E Rear Planet to Sun Gear (Sonnax) (Inside Rear Planet)(Planet Must Be Taken Apart)	1	
74251	Bearing, 700R4/4L60E Rear Planet to Support	1	8642215
44255K	Shim Kit, 700R4/4L60E Rear (.010”) 1982-Up (10 Per Kit) (Sonnax)	1	

© Whatever It Takes Transmission Parts. Inc.

PART #	GASKETS & RUBBER COMPONENTS	QTY.	REFERENCE #
74300	Gasket, 700R4/4L60E Pan	1	8642360
74308	Gasket, 700R4 Accumulator Cover to Plate	1	
74308C	Gasket, 4L60E 1-2 Accumulator Cover To Valve Body Plate # 748 (Colorado/Canyon) 2004-06	1	
44309	Gasket, 700R4 Pump Bolt Washer 1982-E86 (L1986-Up Uses 74312A)	7	8626281
74309A	O-Ring, 700R4/4L60E Pump Bolt L1986-Up	7	8654341
74310	Gasket, 700R4 Pump 1982-E83	1	8642040
74310A	Gasket, 700R4/4L60E Pump L1983-Up	1	8654143
74311	O-Ring, 700R4/4L60E/4L65E Pump Body 1982-03	1	8654716
74311G	Seal, 4L60E/4L65E Pump To Case (Metal/Rubber Compression Style) 2004-Up	1	
54313B	O-Ring, 700R4/4L60E Pump Slide to Body	1	8634088
54314B	Seal, 700R4/4L60E Pump Slide (Rubber)	1	8631283
54315B	Seal, 700R4/4L60E Pump Slide (Teflon)	1	8631877
M304317B	Gasket, 700R4/4L60E Transfer Case Adapter (For 208/241/242/247/249/231/129/119) (6 Bolt)	1	
M308317	Gasket, 700R4/4L60E Transfer Case Adapter (For 207/231/233/236) (5 Bolt)	1	
74320	Gasket, 700R4 Valve Body (Upper) 1982-86 (C No Stripe)	1	8647452
74320A	Gasket, 700R4 Valve Body (Upper) 1987-Up (C 2 Yellow Stripes)	1	8681339
74320E	Gasket, 4L60E Valve Body (Upper) 1992-99 (C No Stripe)	1	8681603
74320EA	Gasket, 4L60E Valve Body (Upper) 2000-06 (CV No Stripe)	1	
74320GC	Gasket, 4L60E/4L65E/4L70E Valve Body (Upper) 2004-Up	1	
74321A	Gasket, 700R4 Valve Body (Lower) 1982-86 (V 2 Yellow Stripes)	1	8647064
74321B	Gasket, 700R4 Valve Body (Lower) 1987-Up (V Single Orange Stripe)	1	8681351
74321E	Gasket, 4L60E Valve Body (Lower) 1992-99 (V No Stripe)	1	8681606
74321EA	Gasket, 4L60E Valve Body (Lower) 2000-06 (VB No Stripe)	1	
74321GC	Gasket, 4L60E/4L65E/4L70E Valve Body (Lower) 2004-Up	1	
74330	Lip Seal, 700R4/4L60E 3-4 Clutch (Inner)	1	8682137
74331	Lip Seal, 700R4/4L60E 3-4 Clutch (Outer)	1	8642138
74332	Lip Seal, 700R4/4L60E Forward Clutch (Inner)	1	8673361
74333	Lip Seal, 700R4/4L60E Forward Clutch (Outer)	1	8642146
74334	O-Ring, 700R4/4L60E Input Drum to Forward Piston	1	
74334A	Lip Seal, 700R4/4L60E Reverse Input (Inner)	1	8682136
74335	O-Ring, 4L60/4L60E Reverse Input (Outer) 1982-86	1	8642057
74335A	Lip Seal, 4L60/4L60E Reverse Input (Inner) 1987-Up	1	8663073
44338	Lathe Cut Seal, 700R4/4L60E Low/Reverse Clutch (Outer)	1	3812830
44339	Lathe Cut Seal, 700R4/4L60E Low/Reverse Clutch (Outer)	1	3812831
44339C	Lathe Cut Seal, 700R4/4L60E Low/Reverse Clutch (Center)	1	8637772
74340	Lip Seal, 700R4/4L60E Overrun Clutch (Inner)	1	8673363
74341	Lip Seal, 700R4/4L60E Overrun Clutch (Outer)	1	8642151
44345	O-Ring, 700R4 Governor Cover 1982-Up	1	
44347	O-Ring, 700R4 Case Connector 1982-91 (Use 103368)	1	
74347	O-Ring, 4L60E Case Connector 1992-Up	1	
44348	O-Ring, 700R4/4L60E Case to Extension Housing	1	1358899
74348A	O-Ring, 4L60E Extension Housing (W/2 Piece Case) 1996-Up	1	
74352	Lathe Cut Seal, 4L60E Forward Clutch Accumulator Piston 1992-Up	1	8680653
54352A	Seal, 700R4/4L60E 1-2 & 3-4 Accumulator (Rubber, Replaces Teflon # 54191AT)	2	8635568
74365AK	D-Ring Kit, 700R4/4L60E Servo 1986-Up (Viton)(Replaces Teflon)(Fits All Servo Sizes)	1	
74366	O-Ring, 700R4 Inner Servo Piston (Donut)(Red Or Green) 1982-Up	1	
74366A	O-Ring, 700R4/4L60E Servo Cover (Outer) (Blue) 1984-Up	1	8647351
74366AK	O-Ring Kit, 700R4/4L60E Servo (For S74902H) (Sonnax)	1	
74366BK	O-Ring Kit, 700R4/4L60E 4th Servo (For A74902H)(Superior)	1	
S74366BK	Replacement Seal Kit, 4L60/4L60E/4L65E/4L70E (Contains: 2 Piston D-Rings & Housing O-Ring)(For S74905BK)	1	
74366HK	O-Ring Kit, 700R4/4L60E 2nd Apply Servo (Fits A74905H)(Contains: 2 O-Rings & 2 Teflon Rings) (Superior)	1	
103368	O-Ring, 700R4 Case Connector1982-91 (Also Speed-O Sleeve, Inner)	1-2	10054241
74369A	O-Ring, 4L60E Speed Sensor 1996-Up	1	
44369A	O-Ring, 700R4/4L60E Speed-O Housing (Outer, 1 7/8”OD) 1982-95	1	25501478
44371B	Boot, 700R4/4L60E Filler Tube	1	1259475
54373A	O-Ring, 700R4 Pump Cover Screen	1	
54373B	Boot, 700R4 Detent Cable	1	25518260
44374B	O-Ring, 700R4/4L60E Output Shaft Yoke Sleeve To Yoke 1982-Up	1	
74378A	O-Ring, 4L60E Cooler Line Fitting (Takes 2)	2	1993012
76378V	O-Ring, Fits A74741Q & A74741QA (Small Ring) (Viton)	1	
74379	Seal, 700R4/4L60E Filter 1982-92	1	8657767
74379E	Seal, 4L60E Filter 1993-Up (Ribbed)	1	
74379P	O-Ring, 700R4 Pump Cover Screen (Use 54373A)	1	8642581
44380	O-Ring, 700R4/4L60E Input Shaft (With Pilot Up Thru 1997)(Small, V-8 Type)	1	8630049
64380	O-Ring, 700R4/4L60E Turbine Shaft (Goes Behind Splines) (Small, 4 & 6 Cylinder Type)	1	8662686

© Whatever It Takes Transmission Parts. Inc.

74380E	O-Ring, 4L60E/4L65E Input Shaft (Large, Viton)(Fits Shaft With No Pilot)(For The 310mm Converter) 1998-Up	1	
74390	External Seal Kit, 700R4 (W/Pan Gasket) 1982-Up	1	

PART #	TECHNICAL MANUALS	QTY.	REFERENCE #
74400	Technical Manual, 700R4	1	THM700R4
74400A	Technical Manual, 700R4 1987-93	1	700R4 87-93
A74400C	Rebuild Manual, 700R4/4L60E Rebuild Procedures (ATRA)	1	
74400CB	Code Book, 4L60E (Diagnostic) 1991-07	1	
74400E	Technical Manual, 4L60E	1	THM4L60-E
74400EA	Technical Manual, 4L60E Update	1	4L60E UPDATE
74400H	Technical Manual, 700R4 1991 Supplement	1	700R4-UPDT-GREEN
74401	Tech Manual, 700-R4 1982-86	1	
74401C	CD Rom, 700R4/4L60E Rebuild Procedures (Rebuild Manual ON CD)(ATRA)	1	

PART #	ELECTRICAL COMPONENTS	QTY.	REFERENCE #
74410A	Switch, 4L60E MLPS/PRNDL (4 & 7 Pin Connectors) 1995-03 (Black Plastic)	1	12450016
74410B	Switch, 4L60E/4L65E MPLS/PRNDL (11 Pin Single Connector) 2004-08 (External)	1	
74411A	Switch, 700R4 4-3 Pulse (2 Prong) (on Valve Body)	1	8642346
54411B	Switch, 700R4 4th Clutch Pressure Switch	1	8683502
74411B	Switch, 700R4 Torque Converter Clutch Signal (1 Prong)	1	8642473
54416A	Switch, 700R4 Lock-Up Delay 50-54 PSI	1	
74416AK	Pressure Switch Kit, 700R4 Lock-Up in 4th (External) W/Wiring	1	
T34418	Solenoid, 4L60E Pulse Width Modulated (3-2 Down Shift) (Teckpak) 1992-95	1	K34326U
74418E	Solenoid, 4L60E 3-2 Downshift 1992-95 & 4L60E PWM (Round) 1995-Up	1-2	
74418EA	Solenoid, 4L60E 3-2 Down Shift (On/Off) 1996-Up	1	
74420K	Solenoid Master Kit, 4L60E 1993-94 (Contains: 1 Lock-Up With Wire Harness, 1 Force Motor, 1 3-2 Down Shift, 2 Shift & 1Manifold Pressure Switch)	1	MS-4L60E
74420K-1	Solenoid Master Kit, 4L60E 1993-95 (A 74420K With Wire Harness)	1	
T74420AK	Solenoid Master Kit, 4L60E (1996-Up) (Contains 1 Lock-Up, 2 Shift, 1 PWM/TCC, 1 On/Off 3-2 Down Shift, 1 Force Motor)	1	
74420AK-1	Solenoid Master Kit, 4L60E 1996-Up (A74420AK With Wire Harness)	1	
74420AAK	Solenoid Kit, 4L60E (1995) (W/1 L-Up W/Wire Harness, 1 Force Motor, 1 3-2 Down Shift, 1 Torque Converter Clutch Pulse Width Modulated, 2 Shift & 1 Manifold Pressure Switch)	1	
74421	Solenoid, 4L60E 1-2 & 3-4 Shift (Rostra)	2	
T84421	Solenoid, 4L60E Shift 1-2 & 3-4 (Teckpak)(No Harness, Posi-Lock Connector)	2	K84825U
T54425B	Solenoid, 700R4/4L60E Torque Converter Clutch (No Harness, Posi-Lock Connector)	1	
74425A	Solenoid, 700R4 Torque Converter Clutch Type 2 (Yellow)(With Harness)	1	8654122
74425B	Solenoid, 700R4 Torque Converter Clutch Type 4 (Red) (With Harness)	1	8654124
74425C	Solenoid, 700R4 Torque Converter Clutch Type 2 (Black) (With Harness)	1	8654123
74425D	Solenoid, 700R4 Torque Converter Clutch Type 1 (White) (With Harness)	1	8654121
74425DA	Solenoid, 700R4 Torque Converter Clutch (Grey)	1	
74425E	Solenoid, 700R4 Torque Converter Clutch Type 9 (Orange) (With Harness)	1	8654129
74425F	Solenoid, 700R4 Torque Converter Clutch Type 6 (Dark Green) (With Harness)	1	8654126
74425G	Solenoid, 700R4 Torque Converter Clutch Type 5 (Blue) (With Harness)	1	8654125
74425HA	Solenoid, 700R4 Torque Converter Clutch Type 10 (Brown) (With Harness)	1	8654130
74425J	Solenoid, 700R4 Torque Converter Clutch Type 15 (Dark Blue) (With Harness)	1	8654415
74425L	Solenoid, 700R4 Torque Converter Clutch Type 18 (Light Brown) (With Harness)	1	10478100
74425N	Solenoid, 4L60E Torque Converter Clutch 1993-Up (Anti-Drain Back Style)	1	15320480
S74425N-2	Snout W/Oring, 700R4/4L60E TCC Solenoid (Aluminum) Up To 1996 (Sonnax)	1	
74425NC	Universal Solenoid W/Wire Harness, 4L60E Torque Converter Clutch L1995-02	1	350-0020
74425Q	Solenoid & Wire Harness, 4L60E Torque Converter Clutch (Blue Connector) L1995-02	1	15320477
74425S	Solenoid & Wire Harness, 4L60E/4L65E Torque Converter Clutch (TCC)(13 Prong Gray Case Connector)(With 4 Small Two Wire Connectors, 1 Large Two Wire Connector, & 1 Five Wire Connector) 1996-02 (Will Retro Fit E1995)	1	15320476
S74425S-2	Snout W/O-Ring, 4L60E TCC Solenoid (Aluminum) 1997-Up (Sonnax)	1	
74425T	Solenoid & Wire Harness, 4L60E/4L65E Torque Converter Clutch (TCC)(13 Prong Gray Case Connector)(With 5 Small Two Wire Connectors & 1 Five Wire Connector) 2003-Up	1	
74425U	Solenoid & Wire Harness, 4L60E/4L65E Torque Converter Clutch (15 Prong Black Connector) 9/2005-08 (For Units With ISS Sensor On Stator)	1	
74425V	Solenoid & Wire Harness, 4L60E/4L65E TCC (17 Prong Connector) 2009-13	1	
350-0063	GM Computer Repair (ECM) 4L60E/4L65E (Wire Harness With Terminal Ends)(Rostra)	1	
T74431A	Vacuum Pressure Control Kit, 4L60E 1993-Up	1	46-MOD
T74435	Solenoid, 4L60E Pressure Control (Force Motor) 1993 (Adjustable)(Teckpak)	1	8683434
34435A	Solenoid, 4L60E Pressure Control (Force Motor) 1992-03 (Has 2 Flat Blades On End Of Solenoid)	1	24203101
34435AK	Repair Kit, 4L60E (Force Motor Solenoid) 1992-02 (W/tool Kit) (Fixes 4 Solenoids) (Transgo)	1	
34435AK-1	Repair Kit Refills, 4L60E (Force Motor Solenoid) 1992-02 (W/Out tool Kit) (Transgo)	1	
74435B	Solenoid, 4L65E Pressure Control (Force Motor) 2003-Up	1	

© Whatever It Takes Transmission Parts. Inc.

PART #	ELECTRICAL COMPONENTS (Continued)	QTY.	REFERENCE #
74436	Sensor, 4L60E Vehicle Speed Sensor (Vehicle Speed 2”OD) Up To 1995	1	8673299
74436A	Sensor, 4L60E Vehicle Speed Sensor (Vehicle Speed 1”OD) 1996-Up	1	
74437	Switch, 700R4 Temperature Switch	1	8673634
74438E	Sensor, 4L60E/4L65E/4L70E ISS (Input Speed) (Bolts To Stator) (With 3 Prong Connector) 2005-Up	1	
74442	Switch, 4L60E Manifold Pressure 1993-Up	1	
44442A	Universal Adjustment Vaccum Switch, 700R4 (1” to 6” Of Vaccum) (Superior)	1	
44442B	Universal Adjustment Vaccum Switch, 700R4 (6” to 22” Of Vaccum) (Superior)	1	
74444	Connector, 700R4 Case (2 Prong)	1	12300205
74444A	Connector, 700R4 Case (3 Prong)(Square)	1	8634383
44445	Wire Harness, (Some 700R4) External (2 Wire)	1	
74445	Wire Harness, 700R4 External (3 Wire)	1	
74445CK	Repair Kit, 4L60E/4L65E External Wire Harness (7 & 4 Pin Neutral Safety Connector W/Wires & Shrink Tubes) (Fits D74410A)	1	
74445E-2K	Repair Kit, 4L60E (Repairs The 2 Pin VSS Harness Only)(1”OD) 1996-Up	1	
74445EK	Repair Kit, 4L60E External Wire Harness (12 Pin Connector) 1992-E95	1	
84445GH	Wire Harness Repair, 4L60E/4L65E/4L70E External (20 Pin Connector)(GM Universal)(Rostra)	1	
74445GK	Repair Kit, 4L60E External Wire Harness (13 Pin Connector) L1995-98	1	350-0014
S74446E	Harness Adapter, 4L60E/4L65E/4L70E EPC Solenoid For Use With 1992-02 EPC Solenoids In 2003-Up Units) (Sonnax)	1	
74446GK	Repair Kit, 4L60E Internal Wire Harness (13 Prong) 1993-98	1	
74447A	Shift Rite, Model W/Green	1	
74447B	Shift Rite, Model WNC Red	1	
74447E	Interceptor, 4L60E (Electronic) 1992-Up	1	
34447R	Recalibrator, GM Electronic Speedometer	1	

PART #	MISC. COMPONENTS	QTY.	REFERENCE #
74475	Seal, 700R4 (W/Splines) Input Housing to Output Shaft (Plastic)	1	8642178
74475A	Seal, 700R4 (W/Splines) Input Housing to Output Shaft (Viton)	1	8677268
54480A	Ball & Capsule, 700R4/4L60E Input Shaft	1	
74480C	Ball & Capsule, 700R4/4L60E 3-4 Accumulator (in Case, Under Valve Body) 1987-Up	1	8634400
74480D	Servo Release, 700/4L60E Superior Replaces OE Ball & Capsule In Case (Switch Valve)	1	
74480E	Ball & Capsule, 700R4/4L60E (In Case Under Low/Reverse Piston) 1988-Up	1	8663890
74480F	Ball & Capsule, 700R4/4L60E Forward Clutch Piston (.305” Tall)	1	
74480FA	Ball & Capsule, 700R4/4L60E Forward Clutch Piston (.250” Tall)		
T74481	Orifice Plug, 700R4/4L60E (Used to Modify #966 Piston)(10 Pieces)(Teckpak)	1	
74482A	Ball & Capsule, 700R4/4L60E Input Drum 1987-Up (Fits Under Piston)	1	24208262
74482AA	Ball & Capsule, 700R4/4L60E (With Spring) Input Drum 1987-Up (Fits Under Piston) (3-4 Clutch Rapid Relief Valve) (Superior)	1	
74482B	Orifice Plug, 7004R/4L60E Input Drum (Under #230 Spacer)	2	8663707
74483B	Cup Plug, 700R4/4L60E Park Pawl Shaft (.385”OD)	1	
74484C	Orifice Plug, 700R4 (Holds In Screen In Pump Body)	1	
74484S	Orifice Plug, 700R4/4L60E Stator (4.3MM)	1	8631146
T74484T	Orifice Plug, 4L60E Torque Converter Clutch (in Stator) 1996-Up (Teckpak)	1	
44487	GM E-Clips	1	9431762
44487B	Grommet, GM Linkage (Round) Plastic	1	
44487BA	Grommet, GM Linkage (Round) Black Rubber	1	
44487C	GM Hitch Pins	1	
44487D	Plastic T (3/16”)	1	
44487E	Splicer, 1/4” Tee	1	
T44489	GM Universal Dust Cover (Teckpak)	1	
34490	Vent, 700R4/4L60E Case, Plastic 1982-91	1	8633408
74490E	Vent, 4L60E Case (Metal) 1992-Up	1	
74493-1A	Stop, 4L60E Dipstick (.660” Overall Height)(Bolts To Valve Body) 1992-95 (Use On Valve Bodies With No Chamfer)	1	
74493-1B	Stop, 4L60E Dipstick (1.235” Overall Height)(Bolts To Valve Body) 1996-03 (Used On Valve Bodies With Chamfer & Shallow Pan)	1	
74993-1C	Stop, 4L60E Dipstick (1.765” Overall Height)(Bolts To Valve Body) 1996-03 (Used On Valve Bodies With Chamfer & Deep Pan)	1	
T44494R	Filler Tube Repair End Fitz	1	
T74494U	Filler Tube & Dip Stick, 700R4/4L60E 1982-95 (Teckpak)	1	
T74494UL	Filler Tube & Dip Stick, 700R4/4L60E With Lockdown Stick 1982-95 (Teckpak)	1	
74495C	Filter Clip, 700R4 Holds Filter in Place 1987-Up	1	8647298
74496A	Retaining Clip, 4L60E (For Push-in Type Cooler Fittings) 1996-97	2	24205103
T54497U	Detent Cable, 700R4 Universal	1	
44497-1	Detent Cable End, 700R4 Teardrop Style Connector (This Is The OE Syle (No Slot) Cable Must Be Recrimped)	1	
S44497-1	Detent Cable Corrector Kit, 700R4 (5 Per Kit) (Sonnax)	1	

© Whatever It Takes Transmission Parts. Inc.

74497-1	TV Cable Conversion Kit	1
T54497BHP	Detent Cable, 700R4 (Hi-Performance)(Overall Length Is 86") 1979-92 (Teckpak)	1
T54497C	Detent Cable, 700R4 (Overall Length 45")	1
T74497C	Detent Cable, 700R4 (Fits 2.5L)	1
74497C-1	Repair End, 700R4 Detent Cable	1
S74497CR-1	TV Cable Rebuild Kit, 4L60E (Cable With Ends) Customer Uses His Housing (Sonnax)	1
74497EC-4	Linkage Plate, TV Bracket For Edelbrock Carburator (Sonnax)	1
74497H-4	Linkage Plate, TV Bracket For Holley Carburator (Sonnax)	1
T54497UA	Detent Cable, 700R4/4L60E Self Adjusting Universal (Teckpak)	1
T74498-1	Grommet, 4L60E/4L65E/4L70E Shift Cable End To Manual Lever (Teckpak)(Fits Shift Levers That Have A Groove Cut Into A Straight Shaft)	1
T74498-1A	Grommet, 4L60E/4L65E/4L70E Shift Cable End To Manual Lever (Teckpak)(Fits Shift Levers That Have A Bell Or Ball Shaped Shaft)	1
T74498-1C	Grommet, GM Shift Cable Repair (Fits Late GM Truck With Cable End That Is 9/16" Wide. It Is Usually In Base Model GM and Chevy Trucks)	1

PART #	HARD PARTS	QTY.	REFERENCE #
74500	Pump, 700R4 (Small Shaft) (Stator Cast # 031, 025) (Body Cast # 380) 1982-E84	1	8647967
74500A	Pump, 700R4 (Large Shaft) Non-Aux (Stator Cast # 025, 031, 304, or 570) (Body Cast # 132 303, 380, 704 or 732) L1984-3/87 (025, 031 Fits 380 Body) (570, 304, Fits 132, 303, 704, 732 Body)	1	8667080
74500B	Pump, 700R4 (Auxiliary Type) 4/1987-92 (Stator Cast # 570, 596, 612, or 828) (Body Cast # 132, 303, 704 or 732) (Less Valves)	1	
74500C	Pump, 4L60E (W/1 Piece Case) (Non-Pulse Width Modulated) 1992-95 (Stator Cast # 101, 596, 612) (Body Cast # 132, 303, 704 Or 732)(Less Valves)	1	
74500D	Pump, 4L60E (W/1 Piece Case) 1995-96 (Stator Cast # 504, 838, or 955) (Body Cast # 073, 836, or 951) Can Use 74500DA (Less Valves)	1	
74500DA	Pump, 4L60E (W/2 Piece Case) L1995-96 (Stator Cast # 504 or 838) (Body Cast # 073) Less Valves (Cannot Use 74500D)	1	
74500G	Pump, 4L60E/4L65E (W/2 Piece Case) (13 Vane) 1997-9/2002 (Stator Cast # 611 or 705) Less Valves (6 7/8" Long Stator Tube) (Uses A Boost Valve Sleeve 2.100" Overall Length) (Body Cast # 073 or 555) O-Ring To Rear Surface Measures .160" Thick	1	
74500GA	Pump, 4L60E/4L65E (W/2 Piece Case) (13 Vane) 1997-9/2002 (Stator Cast # 611 or 705) Less Valves (7 3/8" Long Stator Tube)(Uses A Boost Valve Sleeve 2.100" Overall Length) (Body Cast # 073 or 555) O-Ring To Rear Surface Measures .160" Thick	1	
74500GB	Pump, 4L60E/4L65E (With 2 Piece Case) (13 Vane) 9/2002-05 (Stator Cast # 611 or 705) Less Valves (6 7/8" Stator Tube, Uses A Boost Valve Sleeve 2.100" Overall Length) (Body Cast # 073 or 555) O-Ring To Rear Surface Measures .100" Thick	1	
74500GC	Pump, 4L60E/4L65E (With 2 Piece Case) (13 Vane) 9/2002-05 (Stator Cast # 611 or 705) Less Valves (7 3/8" Stator Tube, Uses A Boost Valve SLeeve 2.100" Overall Length) (Body Cast # 073 or 555) O-Ring To Rear Surface Measures .100" Thick	1	
74500GD	Pump, 4L60E/4L65E (With 2 Piece Case)(13 Vane) 2004-05 (Stator Cast # 611) (Less Valves) (6 7/8" Long Tube, Uses A Boost Valve Sleeve 2.100" Overall Length) (Body Cast # 073) (Does Not Use An Outer O-Ring)	1	
74500GE	Pump, 4L60E/4L65E (With 2 Piece Case) (13 Vane) 2004-05 (Stator Cast # 611 or 705) (Less Valves) (7 3/8" Long Tube, Uses A Boost Valve Sleeve 2.100" Overall Length) (Body Cast # 073) (Does Not Use An Outer O-Ring)	1	
74500GF	Pump, 4L60E/4L65E (With 2 Piece Case)(13 Vane) 2004-05 (Stator Cast # 611 or 672) (Less Valves)(6 7/8" Long Tube, Uses A Boost Valve Sleeve 1.885" Overall Length) (Body Cast # 073) (Does Not Use An Outer O-Ring)(Uses Stator Tube Without ISS Hole)	1	
74500GG	Pump, 4L60E/4L65E (With 2 Piece Case)(13 Vane) 2003-05 (Stator Cast # 611 Or 672) (Less Valves)(7 3/8" Long Tube, Uses A Boost Valve Sleeve 1.885" Overall Length) (Body Cast # 073) (Does Not Use An Outer O-Ring)(Uses Stator Tube Without ISS Hole)	1	
74500H	Pump, 4L60E/4L65E (W/2 Piece Case) (13 Vane) 2005-06 (Stator Cast # 075 or 672) (Body Cast # 073) Less Valves (6 7/8" Long Stator Tube) Does Not Use An Outer O-Ring (Uses Stator Tube With ISS Hole, But No ISS Sensor)	1	
74500HA	Pump, 4L60E/4L65E (W/2 Piece Case) (13 Vane) 2005-Up (Stator Cast # 075 or 672) (Body Cast #073) Less Valves (7 3/8" Long Stator Tube) Does Not Use An Outer O-Ring (Uses Stator Tube With ISS Hole, But No ISS Sensor)	1	
74500J	Pump, 4L60E/4L65E/4L70E (With 2 Piece Case) (13 Vane) 2005-Up (Stator Cast # 075 or 672) (Body Cast # 073) (Less Valves) (6 7/8" Long Stator Tube)(Does No tUse An Outer O-Ring) (Uses ISS Sensor)	1	
74500JA	Pump,l60E/4L65E/4L70E (With 2 Piece Case) (13 Vane) 2005-Up (Stator Cast # 075 or 672) (Body Cast # 073) (Less Valves) (7 3/8" Long Stator Tube) (Does Not Use An Outer O-Ring) (Uses ISS Sensor)	1	
74500ADAPTER	Bell Housing Adapter Inserts, 4L60E (Superior) Bolt On Pump (Allows Use Of Earlier Pump Body On The Bolt On Bell Housing Applications)	1	

© Whatever It Takes Transmission Parts. Inc.

PART #	PUMP COMPONENTS	QTY.	REFERENCE #
74089	Retainer, 700R4/4L60E (Front Seal Lock) (Metal) 1982-Up	1	8654491
54176B	Ring, 700R4/4L60E Pump Slide to Body (Metal)	1	8634079
44309	Gasket, 700R4 Pump Bolt Washer 1982-E86	7	3884683
74312A	O-Ring, 700R4/4L60E Pump Bolt L1982-Up	7	
54313B	O-Ring, 700R4/4L60E Pump Slide	1	
54314B	Seal, 700R4/4L60E Pump Slide (Rubber)	1	8631283
54315B	Seal, 700R4/4L60E Pump Slide (Teflon)	1	8631877
74320GCK	Gasket Kit, 4L60E/4L65E/4L70E Bonded Plates (Upper & Lower) 2004-Up	1	
74435	Solenoid, 4L60E Pressure Control (Force Motor) 1993 (Adjustable)	1	
74482P	Capsule W/Check Ball, 700R4/4L60E (Fits in Stator)	1	8628732
74484S	Orifice Plug, 700R4/4L60E Stator (4.3MM)	1	8631146
74498-1B	Grommet, GM Shift Cable Repair (Fits 2004-12 Colorado & Canyon)	1	
74507-2	Sleeve, 700R4/4L60E/4L65E (Inside Stator Shaft Tube) 1982-3/2004 (No ISS Sensor Hole)	1	
74507-4	Seal Blowout Eliminator, 700R4/4L60E (Front Seal) (Contains: 30-1/4 Screws, Drill Bit, & Tap)	1	
74507A-3	Spring, 700R4 Pressure Relief (in Stator on top of Check Ball)	1	8634106
54507BC-6	Stop, 700R4 Converter Clutch Valve	1	8634705
S74507C-1	Valve, 700R4 Torque Converter Clutch Apply Valve (Sonnax)(Also Fits 4L60E Non PWM)	1	
74507CA-3	Spring, 700R4 Lock-Up Converter Clutch Valve (Outer)	1	8634399
74507CB-3	Spring, 700R4 Lock-Up Converter Clutch Valve (Inner) (Yellow)	1	8634378
S74507CE-1	Valve, 4L60E Torque Converter Clutch Apply Valve (Sonnax)	1	
74507CE-3	Spring, 4L60E L/Up Converter Clutch Valve 1993-99	1	
S74507CE-8	Seal, 4L60E TCC Apply Valve (Teflon Rings) (Fits The S74507CE-1 Valve) (Sonnax)	1	
74507CEK	Valve Kit, 4L60E TCC Apply (Superior, Power Valve)	1	
S74507HPK	Performace Pack, 4L60E/4L65E 1994-Up (Contains: Boost Valve W/Sleeve .490”OD, Pressure Regulator Spring, Servo Piston D-Ring Kit, 4th Servo Spring, 3-4 Accumulator Piston Kit, Forward Accumulator Kit, 1-2 Pinless Accumulator Piston Kit)(Sonnax)	1	
74507P-1	Pressure Regulator Valve, 700R4 (W/2 Flats) 1982-91	1	8684048
S74507P-1	Pressure Regulator Valve, 700R4 (Oversize) (Use With T-77917-TL) (Sonnax)	1	
S74507PE-1	Pressure Regulator Valve, 4L60E (Oversized) (Uses T-77917-TL) 1992-Up (Sonnax)	1	8684049
T-77917-TL	Reamer & Guide, 700R4/4L60E Oversize Pressure Regulator Valve (Use With S74507P-1 and S74507PE-1)(Sonnax)	1	
74507P-3	Spring, 700R4 Pressure Regulator	1	8634490
74507PB-3	Spring, 700R4 Pressure Regulator (1.94” Long, Pink)	1	8642751
74507PE-3	Spring, 4L60E Pressure Regulator (Outer)	1	8680732
S74507PK	Sure Cure Kit, 700R4 (Sonnax)	1	
S74507PEK	Sure Cure Kit, 4L60E (Pulse Width Modulated) (Sonnax) (Must Use T-77754-R2, T-77754-TL, & T-77917-TL)	1	
T-77754-R2	Reamer, 4L60E TCC Regulator (For S74507PEK)	1	
T-77754-TL	Reamer, 4L60E (Sonnax) (For S74507PEK)	1	
T-77917-TL	Reamer & Guide, 700R4/4L60E Oversize Pressure Regulator Valve (Use With S74507PK and S74507PEK)(Sonnax)	1	
74507R-4	C-Clip, 700R4 Holds Reverse Boost in Stator	1	11503348
74507RAK	Valve & Bushing Assembly, 700R4 Reverse Boost (.303”OD Large Land & .200”OD Small Land on Valve & Bushing)	1	8654989
74507RBK	Valve & Bushing Assembly, 700R4 Reverse Boost (.317”OD Large Land & .220”OD Small Land on Valve & Bushing)	1	8642922
S74507RCK	Valve & Bushing Assembly, 700R4 Reverse Boost (.366”OD Large Land & .246”OD Small Land on Valve & Bushing) (Sonnax)	1	8642921
S74507RDK	Valve & Bushing Assembly, 700R4 Reverse Boost (.363”OD Large Land & .283”OD Small Land on Valve)(With O-Rings) (Sonnax)	1	8648958
A74507RGK	Valve Kit, 700-R4 Reverse Boost (.296”OD Small Land On Valve) 1982-93	1	
A74507RHK	Valve & Bushing Assembly, 700R4 Reverse Boost (.433”OD Large Land & .369”OD Small Land on Valve & Bushing) (Superior)	1	K020
S74507RJK	Valve & Bushing Assembly, 4L60E Reverse Boost (.490”OD) (Sonnax)	1	
74507RL-1	Valve, 4L60E Reverse Boost (.470”OD)	1	
74507RM-1	Valve, 4L60E Reverse Boost (.420”OD)	1	
S74507T	Valve & Sleeve Assembly, 700R4 T.V. Boost (.500”OD) (Sonnax) (Factory Style)	1	
74507T-1	Valve, 700R4 Throttle Valve Boost (.500”OD Valve)	1	
S74507T-8K	O-Rings, For S74507TK/TAK/TBK (25 Per Pack) (Sonnax)	1	
74507TK	Valve Assembly, 700R4 Throttle Boost Valve & Bushing (.500”OD Valve)	1	8634941
S74507TK	Valve & Sleeve Assembly, 700R4 T.V. Boost (.500”OD) (Sonnax) (O-Ring Type)	1	
S74507TA	Valve & Sleeve Assembly, 700R4 T.V. Boost (.471”OD) (Sonnax) (Factory Style)	1	
74507TA-1	Valve, 700R4 Throttle Valve Boost (.471”OD Valve)	1	
74507TAK	Valve & Sleeve Assembly, 700R4 T.V. Boost (.471” Diameter Valve)	1	8634940
S74507TAK	Valve & Sleeve Assembly, 700R4 T.V. Boost (.471”OD) (Sonnax) (O-Ring Type)	1	
S74507TB	Valve & Sleeve Assembly, 700R4 T.V. Boost (.423”OD) (Sonnax) (Factory Style)	1	
S74507TBK	Valve & Sleeve Assembly, 700R4 T.V. Boost (.423” Diameter Vavle) (Sonnax)	1	

© Whatever It Takes Transmission Parts. Inc.

A74507TCK....Valve & Sleeve Assembly, 4L60E T.V./Reverse Boost (.470”OD)(Transgo)(Factory Style)
.....(Contains: Valve, Sleeve, 2 Springs, Snap Ring).....1 .....
S74507TCK....Valve & Sleeve Assembly, 4L60E T.V./Reverse Boost (.470”OD) (Sonnax)(Factory Style).....1 .....
S74507TDK....Valve & Sleeve Assembly, 4L60E T.V./Reverse Boost (.470”OD) (Sonnax)(Valve, Sleeve &
.....2 O-Rings).....1 .....
A74507TE.....Valve & Sleeve, 4L60E TV/Reverse Boost (.500”OD) 1993-Up.....1 .....
A74507TEK....Valve & Sleeve Assembly, 4L60E TV/Reverse Boost (.500”OD) Hi-Performance (Transgo).....1 .....
S74507TEK....Valve & Sleeve Assembly, 4L60E/4L65E T.V./Reverse Boost (.490”OD) 1992-04 (Sonnax)
.....(Contains: Valve, Sleeve & 2 O-Rings).....1 .....
S74507TEK-1.Line Pressure Booster Kit, 4L60E/4L65E (Contains: Large Ratio TV/Reverse Boost Valve
.....(.490”OD), Sleeve, 2 O-Rings, And Pressure Regulator Spring) 1992-05 (Sonnax).....1 .....
S74507TFK....Valve & Sleeve Assembly, 4L60E T.V./Reverse Boost (.490”OD) 1998-04 (Sonnax)(Factory
.....Style).....1 .....
A74507TGK....Valve & Sleeve Assembly, 4L60E/4L65E/4L70E TV/Reverse Boost (.510”OD)(Steel Sleeve)
.....2005-Up (Superior).....1 .....
S74507TGK....Line Pressure Booster Kit, 4L60E/4L65E (Contains: Large Ratio TV/Reverse Boost (.490”OD),
.....2 O-Rings, & Pressure Regulator Spring)(For ISS Type Stator)(With Production Dates Of
.....2006-Up)(Sonnax).....1 .....
S74507THK....Valve Kit, 4L60E/4L65E/4L70E Boost Valve (Contains: Valve, Sleeve, & 3 O-Rings)(Sonnax)
.....(Replaces Late Pump Design 1.890” Length (Short) Sleeve, Large OE Ratio Assemblies).....1 .....

PART #	HARD PARTS (Continued)	QTY.	REFERENCE #
74510	Body, 700R4 (Cast # 380) 1982-E84	1	8649950
74510A	Body, 700R4/4L60E (Cast # 132, 303, 704, 732, 951) L1984-94	1	8649964
74510B	Body, 4L60E (W/1 Piece Case) (Cast # 073, 836, 951) 1995-96 (Can Use 74510D)	1	
74510D	Body, 4L60E (W/2 Piece Case) (Cast # 073) L1995-96	1	24204797
74510G	Body, 4L60E/4L65E (W/2 Piece Case) (13 Vane) 1997-9/2002 (Cast #073 or 555) O-Ring To Rear Surface Measures .160” Thick	1	
74510GB	Body, 4L60E/4L65E (With 2 Piece Case) (13 Vane) 9/2002-04 (Cast # 073 Or 555) O-Ring To Rear Surface Measures .100” Thick	1	
74510H	Body, 4L60E/4L65E (W/2 Piece Case) (13 Vane) 2004-Up (Cast # 073) Does Not Use An Outer O-Ring)	1	
74510J	Body, 4L60E/4L65E (W/2 Piece Case) (High Volume) 4/2004-Up (Has A Smaller Rotor & Offset Outer Slide)	1	
74520	Stator, 700R4 (Small Shaft) (Cast # 031 or 025) 1982-E84	1	8647968
74520A	Stator, 700R4 (Large Shaft) (Non Auxiliary) (Cast # 304, 570) L1984-3/87	1	8647984
74520B	Stator, 700R4 (Auxiliary) (Cast # 570, 596, 612, 828) 3/1987-Up	1	
74520C	Stator, 4L60E (Non-Pulse Width Modulated) (Cast # 101, 596, 612) 1992-95	1	
74520D	Stator, 4L60E (Cast # 504, 838) L1995-96	1	24209050
74520G	Stator, 4L60E/4L65E (Cast # 611 or 705) (6 7/8” Long Tube) Less Valves 1997-2005 (Boost Valve Sleeve Is 2.100” Overall Length)	1	
74520GA	Stator, 4L60E/4L65E (Cast # 611 or 705) (7 3/8” Long Tube) Less Valves 1997-2005 (Boost Valve Sleeve Is 2.100” Overall Length)	1	
74520GF	Stator, 4L60E/4L65E (Cast # 611 or 672)(6 7/8” Long Tube) Less Valves 2003-05 (Boost Valve Sleeve Is 1.885” Overall Length)(Uses Stator Tube Without ISS Hole)	1	
74520GG	Stator, 4L60E/4L65E (Cast # 611 Or 672)(7 3/8” Long Tube) Less Valves 2004-05 (Boost Valve Sleeve Is 1.885” Overall Length)(Uses Stator Tube Without ISS Hole)	1	
74520H	Stator, 4L60E/4L65E (Cast # 075 or 672) (6 7/8” Long Tube) Less Valves 2005-06 (Uses Stator Tube With ISS Hole But No ISS Sensor)	1	
74520HA	Stator, 4L60E/4L65E (Cast # 075 or 672) (7 3/8” Long Tube) Less Valves 2005-06 (Uses Stator Tube With ISS Hole But No ISS Sensor)	1	
74520J	Stator, 4L60EL65E/4L70E (Cast # 075 or 672) (6 7/8” Long Tube) Less Valves (Uses ISS Sensor) 2005-Up	1	
74520JA	Stator, 4L60E/4L65E/4L70E (Cast # 075 or 672) (7 3/8” Long Tube) Less Valves (Uses ISS Sensor) 2005-Up	1	

PART #	PUMP COMPONENTS (Continued)	QTY.	REFERENCE #
74529	Shaft Tube, 700R4 Stator Shaft Tube 1982-86	1	
74529A	Stator Shaft Tube, 700R4/4L60E (6 7/8” Long) 1987-04 (Will Retro Fit To L1984)	1	8642035
74529B	Stator Shaft Tube, 700R4/4L60E/4L65E (Universal) (6 7/8” Long) (No ISS Sensor) 1982-04	1	
S74529B	Stator Shaft Tube, 700R4/4L60E/4L65E (Universal) (6 7/8” Long) 1982-04 (Sonnax) Comes W/27 & 30 Spline Bushing)	1	
74529C	Stator Shaft Tube, 4L60E/4L65E (7 3/8” Long) 1997-04	1	
74529J	Stator Shaft Tube, 4L60E/4L65E/4L70E (6 7/8” Long) 2005-Up	1	
74529JA	Stator Shaft Tube, 4L60E/4L65E/4L70E (7 3/8” Long) 2005-Up	1	
74531A	Rotor Kit, 700R4/4L60E (10 Vane) (.7069” Rotor) 1982-96	1	8649951
74531C	Rotor Kit, 4L60E/4L65E (13 Vane) (.707” Rotor) 1997-3/2004	1	24219538
54532B	Rotor, 700R4 7 Vane	1	
54532BA	Rotor, 700R4/4L60E 10 Vane 1982-96	1	

© Whatever It Takes Transmission Parts. Inc.

PART #	PUMP COMPONENTS (Continued)	QTY.	REFERENCE #
74532C	Rotor, 4L60E (13 Vane) (.7070" to .7075") 1997-Up	1	24208568
64533	Vane, 700R4/4L60E 1982-98	7-13	8631280
74533K	Vane & Ring Kit, 700R4/4L60E (10 Vane) 1982-96	1	
74533AK	Vane & Ring Kit, 700R4 (7 Vane)	1	
74533CK	Vane & Ring Kit, 4L60E (13 Vane) 1997-Up	1	
54534B	Pump Slide, 700R4/4L60E	1	8634082
54534C	Pump Slide, 4L60E/4L65E For 13 Vane Rotor (.707") 1997-Up	1	
54535B	Pivot Pin, 700R4/4L60E Pump Slide 1982-Up	1	
74536	Spring, 700R4/4L60E Pump Slide (Outer) 1982-Up	1	8639563
74536K	Spring Set, 700R4/4L60E Pump Slide (Inner & Outer) 1982-Up	1	
S74536A	Spring, 700R4/4L60E Pump Slide (5 Per Bag) (Hi-Performance) (Maintains High Volume at High RPM) (Sonnax)(No Shim Should Be Used With This)	1	
144536A	Spring, 4L60E/4L65E Pump Slide (.645"OD) (Conical Shaped) 2003-Up (Retro Fits to 1997)	1	
S74536A-1	Shim, 700R4/4L60E Pump Slide (10 Per Bag) (Use With 74536 Springs) (Sonnax)	1	
74537	Spring, 700R4/4L60E Pump Slide (Inner) 1982-Up	1	8639526
54538B	Ring, 700R4/4L60E Pump Rotor to Vane (Steel)	2	24201144
74538BAK	Pump Ring/Spring Kit, 4L60E 1992-Up (2 Vane Rings, Inner & Outer Slide Springs, & Pressure Regulated Spring)	1	
54538BK	Ring & Spring Kit, 700R4 (2 Vane RIngs, Inner & Outer Slide Springs, Pressure Regulator Spring) 1982-92	1	8634079
74538C	Ring, 4L60E Pump Vane (13 Vane) 1997-Up	2	24201144
54539B	Rotor Guide, 700R4 (7 Vane)	1	8654733
54539BA	Rotor Guide, 700R4/4L60E (10 Vane) 1982-96	1	8654734
74539C	Rotor Guide, 4L60E Pump (13 Vane) 1997-Up	1	24205410
54540B	Spring, 700R4/4L60E Under Pivot Pin	1	
74547	Apply Ring, 700R4/4L60E 3-4 Clutch (5 Fingers)(Cast # 7)(Cast # Is On The Finger)	1	8642375

PART #	HARD PARTS (Continued)	QTY.	REFERENCE #
74554K	Drum W/Shaft, 700R4 Input (27 Spline W/Pilot) 1982-E84 (Small Shaft) (V-8)	1	
74554AK	Drum W/Shaft, 700R4 Input (27 Spline No Pilot) 1982-E84 (Small Shaft) (2.8L V-6)	1	8647963
74554BK	Drum W/Shaft, 700R4 Input (30 Spline W/Pilot) L1984-86	1	8647965
74554CK	Drum W/Shaft, 700R4 Input (27 Spline No Pilot) L1984-86 (Large Shaft) (2.8L V-6)	1	8657902
S74554DAHPK	Drum W/Shaft Kit, 4L60E Input (30 Spline With Pilot)(Sonnax Smart-Tec 5/93-Up)(With Teflon Rear Stator Bushing, Modified Input Housing, Input Drum Reinforcemant Sleeve, O-Ring, Reworked OE Overrun Piston, 3-4 Clutch Aplly Plate, 3-4 Clutch Return Springs (10), 3-4 Clutch Backing Plate & Socket Head Cap Screws (15) With Shaft)	1	
74554DAK	Drum W/Shaft, 4L60E Input (30 Spline W/Pilot) 5/1993-Up	1	
74554DHPK	Drum Kit, 4L60/4L60E/4L65E /4L70E Input (Less Shaft)(K&M Modified)(Contains: Drum, 8 Thinner 350 F&D 3-4 Frictions & Steels, With Both 3-4 Pressure Plates & Snap Ring)(By Using Early Shafts, This Drum Will Retro Back To 1982)	1	
74554DK	Drum W/Shaft, 700R4/4L60E Input (30 Spline W/Pilot) 1987-5/93	1	8667659
74554EAK	Drum W/Shaft, 4L60E Input (27 Spline No Pilot) 5/1993-97 (Large Shaft)	1	8667661
74554EK	Drum W/Shaft, 700R4/4L60E Input (27 Spline No Pilot) 1987-5/93 (Large Shaft)	1	
S74554GAHPK	Drum Kit, 4L60/4L60E/4L65E/4L70E Input (Less Shaft)(Sonnax Smart-Tech)(Contains: Teflon Rear Stator Bushing, Modified Input Housing, Input Drum Reinforcement Sleeve, O-Ring, Reworked OE Overrun Piston, 3-4 Clutch Apply Plate, 3-4 Clutch Return Springs (10), 3-4 Clutch Backing Plate & (15) Socket Head Cap Screws)	1	
74554GBHPK	Drum Kit, 4L60/4L60E/4L65E /4L70E Input (Less Shaft)(K&M Modified)(Contains: Drum, 8 Thinner 3-4 350 F&D Frictions And Steels, A Stepped #141 Pressure Plate, A Threaded #140 Pressure Plate, Set Screws & Springs For The #140, Front Modified Ring Gear)(Allows The Wider TH350 Frictions To Replace The OE 3-4 Plates For More Holding Power)	1	
S74554GHPK	Drum Kit, 4L60E/4L65E Input (With Shaft)(30 Spline No Pilot)(Sonnax Smart-Tech) 1998-04 (With Teflon Rear Stator Bushing, Modified Input Housing, Input Drum Reinforcement Sleeve, O-Ring, Reworked OE Overrun Piston, 3-4 Clutch Apply Plate, 3-4 Clutch Return Springs (10), 3-4 Clutch Backing Plate & (15) Socket Head Cap Screws)	1	
74554GK	Drum W/Shaft, 4L60E/4L65E Input (30 Spline No Pilot) 1998-04 (Large Shaft) (Long Splines W/O-Ring Groove Behind Splines)	1	
74554GLK	Drum W/Shaft, 4L60E/4L65E/4L70E Input (30 Spline No Pilot)(Large Shaft)(No Reluctor On Shaft) 2005-06 (Can Use 74554HK)	1	
S74554HHPK	Drum W/Shaft Kit, 4L60E/4L65E (30 Spline No Pilot)(Sonnax Smart-Tech 2005-Up) (With Teflon Rear Stator Bushing, Modified Input Housing, Input Drum Reinforcement Sleeve, O-Ring, Reworked OE Overrun Piston, 3-4 Clutch Apply Plate, 3-4 Clutch Return Springs (10), 3-4 Clutch Backing Plate & Socket Head Cap Screws (15) With Shaft)	1	
74554HK	Drum W/Shaft, 4L60E/4L65E/4L70E Input (30 Spline No Pilot)(Large Shaft)(With 15 Teeth Reluctor On Shaft) 2005-Up	1	
74554JK	Drum W/Shaft, 4L60E Input (27 Spline No Pilot)(Small Shaft)(With 15 Teeth Reluctor On Shaft) 2005-Up	1	

© Whatever It Takes Transmission Parts. Inc.

74554JLK ..... Drum W/Shaft, 4L60E Input (27 Spline No Pilot)(Small Shaft)(No Reluctor On Shaft) 2005-06 ..... 1 .....
S74554-SVC... Service Kit, 4L60E Input Drum W/Shaft (Services Sonnax Smart-Tec Drums)(Includes Overrun
..... Piston Inner Seal, 3-4 Clutch Apply Plate, Ten 3-4 Clutch Return Springs, Bolt On Anchor Plate,
..... Overrun Piston Outer Seal, 15 Socket Head Cap Screws)(Sonnax) ..... 1 .....
74556..... Drum, 700R4 Reverse Input (W/Check Ball) 1982-2/87 ..... 1 8642943
74556A ..... Drum, 700R4 Reverse Input (No Check Ball) 3/1987-91 (Has Round Oil Holes in Bore)..... 1 8663068
74556B ..... Drum, 4L60E Reverse Input (No Check Ball) 1992-Up (Has Square Oil Holes in Bore)
..... Retro Fits 700R4 1987-Up 1 8681295
74556BAK ..... Drum W/Piston, 4L60E Reverse Input (No Check Ball) 1992-Up (Has Square Oil Holes In Bore)
..... (With 4 Clutch Piston # 966AA)(Retro Fits 700R4 1987-Up) ..... 1 .....
74564..... Piston Kit, 700R4/4L60E Input Drum 1982-92 (Exc 2.8L)..... 1 .....
74564A ..... Piston Kit, 700R4/4L60E Input Drum 1982-93 (2.8L)..... 1 .....
74564B ..... Piston Kit, 4L60E Input Drum W/4th Clutch Bonded Piston..... 1 .....
74564BA..... Piston Kit, 4L60E Input Drum W/Both Pistons Bonded..... 1 .....
74566..... Piston Kit, 700R4 Reverse Input Drum (Steel) 1982-2/87 ..... 1 .....
74566A ..... Piston Kit, 700R4/4L60E Reverse Input Drum (Aluminum 3 Clutch) 2/1987-96 ..... 1 .....
74567..... Piston Kit, 700R4 Reverse Clutch (Exc 2.8L)82-86 ..... 1 .....
74567A ..... Piston Kit, 700R4 Reverse Clutch (2.8L only) 1982-86..... 1 .....
74567B ..... Piston Kit, 700R4 Reverse Clutch (Exc 2.8L) 1987-Up..... 1 .....
74567C ..... Piston Kit, 700R4 Reverse Clutch (2.8L only) 1987-Up ..... 1 .....
74567E ..... Piston Kit, 4L60E Low/Reverse Clutch (4.3L & V-8) 1992-Up..... 1 .....
74567F ..... Piston Kit, 4L60E Low/Reverse Clutch (All V-6 Except 4.3L) 1992-Up..... 1 .....
74574..... Clutch Hub, 700R4/4L60E Overrun 1982-Up..... 1 .....
74582..... Planet, 700R4 Front (4 Gear) (W/Round Washers) (Uses A 2 Tab Washer # 235)..... 1 8654329
74582A ..... Planet, 700R4/4L60E Front (W/Bat Wing Washers)(Does Not Use A 2 Tab Washer # 235)
..... (Uses A 74238A Top Bearing) 1 24212177
74582B ..... Planet, 4L60E/4L65E/5L70E Front(4 Gear)(Uses A 74238GA TOP BEARING)1992-Up ..... 1 .....
74583AK..... Planet Kit, 700R4/4L60E (W/# 612, 582, 592, 602, 624, 614, 584, 594, 604 & 889)
..... (W/Oil Slinger)..... 1 .....
S74582AHPK . Planet Kit, 700R4/4L60E/4L65E Front (Contains: 6 Gear Planet & Sun Gear)(Heavy Duty)
..... (Sonnax)..... 1 .....
74582B ..... Planet, 4L60E/4L65E/5L70E Front (4 Gear)(Uses A 74238GA Top Bearing) 1992-Up ..... 1 .....
74583BK..... Planet Kit, 700R4/4L60E (W/# 612, 582, 592, 602, 624, 614, 584, 594, 604 & 889) (W/Out
..... Oil Slinger) ..... 1 .....
74582G..... Planet, 4L60E/4L65E Front (5 Gear)(Uses A # 74238 Top Bearing)(Retro Fits All 4 Gear
..... Planets) ..... 1 .....
74582GA..... Planet, 4L60E/4L65E/4L70E Front (5 Gear)(Uses A # 74238GA Top Bearing)(Updated) 2004-Up
..... (Must Use 74602GA & 74238GA To Make Retro Fit)..... 1 .....
74584..... Planet, 700R4 Rear (4 Gear) (W/Round Washers) (Can Use 74584B)..... 1 .....
74584K ..... Planet Kit, 700R4 Rear (Early)(Round Washers) (W/# 614, 584, 250, 594, 604 & 889)..... 1 .....
74584A ..... Planet, 700R4/4L60E Rear (4 Gear) (With Batwing Washers, With Oil Slinger)..... 1 .....
74584AK..... Planet Kit, 700R4/4L60E Rear (4 Gear) (Bat Wing Washer Type, W/Oil Slinger) (Planet,
..... Sun Gear, Ring Gear, Hub, & Bearing) ..... 1 .....
74584B ..... Planet, 700R4/4L60E Rear (4 Gear) (W/Batwing Washers & W/Out Oil Slinger)..... 1 24241241
74584BK..... Planet Kit, 700R/4L60E Rear (4 Gear) (Bat Wing Washer Type, No Oil Slinger) (Planet,
..... Sun Gear, Ring Gear, Hub, & Bearing) ..... 1 .....
74584G..... Planet, 4L60E/4L65E Rear (5 Gear) (Retro Fits All 4 Gear) 9/2002-Up ..... 1 .....

PART #	PLANETARY COMPONENTS	QTY	REFERENCE #

S74584-1 ..... Washer, 700R4/4L60E Rear Planet Pinion (Round) (1 Washer) (Sonnax)..... 4 .....
74584A-1 ..... Washer, 700R4/4L60E Rear Planet Pinion (Batwing) (1 Washer) ..... 4 .....
S74584A-2..... Gear, 700R4/4L60E Rear Planet Pinion (1 Gear) (Sonnax) ..... 4 .....
S74584A-3K ... Pin Kit, 700R4/4L60E Rear Planet (4 Per Kit) (Sonnax)..... 1 .....
S74584A-4K ... Needle Bearing Set, 700R4/4L60E Rear Planet Pinion (80 Per Set) (Sonnax)..... 1 .....
S74584A-7..... Rear Planet Rebuild Kit, 700R4/4L60E Parts to Rebuild Rear Planet (4 Gear)(Sonnax)
..... (Contains: 4 Pinion Gears, 4 Pinion Pins, 80 Needles, 8 Round Washers & 8 Bat Wing
..... Washers) (Does Not Include S74250, Must Order Seperately) ..... 1 ..... 77731-RK
S74584G-7 ..... Rear Planet Rebuild Kit, 4L60E/4L65E Parts To Rebuild Rear Planet (5 Gear)(Sonnax)
..... Contains: 5 Pinion Gears, 5 Pinion Pins, 100 Needles, 10 Round Washers & 10 Tri-Metal
..... Washers)(Does Not Include S74250 Bearing, Must Order Sererately)..... 1 .....

PART #	HARDPARTS (Continued)	QTY	REFERENCE #

74592..... Ring Gear, 700R4/4L60E Input (1 3/8” Long Clutch Spline) (Can Use 74592B) 1 8663639
74592A ..... Ring Gear, 700R4/4L60E Input (1 1/2” Long Clutch Spline) (Can Use 74592B) ..... 1 .....
74592B ..... Ring Gear, 700R4/4L60E Input (1 5/8” Long Clutch Spline) ..... 1 .....
74594..... Ring Gear, 700R4 Rear Planet (Early)..... 1 8667055
74594A ..... Ring Gear, 700R4/4L60E Rear Planet (Hardened) (Late) ..... 1 .....
74602..... Hub W/Shaft, 700R4/4L60E Front Ring Gear (Uses A Washer # 74241) 1982-01 ..... 1 8681518

© Whatever It Takes Transmission Parts. Inc.

PART #	HARDPARTS (Continued)	QTY	REFERENCE #
74602B	Hub W/Shaft, 4L60E/4L65E Front Ring Gear (Uses A Bearing # 74241B) 2001-03/2007 (Uses A 74238 Or 74238A Inner Bearing)(Can Use 74602BA)	1	
74602BA	Hub W/Shaft, 4L60E/4L65E Front Ring Gear (Uses A Bearing # 74241BA) 2002-04 (Uses 74238 or 74238A Inner Bearing)(Can Use 74602B If Used With 74241B)	1	
74602GA	Hub W/Shaft, 4L60E/4L65E/4L70E Front Ring Gear (Updated)(Uses An Inner Bearing # 74238GA) 03/2007-Up	1	24241255
74604	Hub, 700R4/4L60E Rear Ring Gear (Early) (Can Use 74604A)	1	
74604A	Hub, 700R4/4L60E Rear Ring Gear (Cut For Oil Slinger)	1	8654197
74612	Sun Gear, 700R4 Front Planet E1982	1	
74612A	Sun Gear, 700R4/4L60E Front Planet L1982-Up	1	8647093
74612B	Sun Gear, 4L60E/4L65E Front Planet 1997-Up (Presses Into The Forward Sprag Inner Race)(Sell 74648CD)	1	
74614	Sun Gear, 700R4/4L60E Rear Planet	1	8642204
74624	Shell, 700R4/4L60E Reaction Sun (Washer Type)(Hardened)(.135"Thick)	1	8668349
74624A	Shell, 700R4/4L60E Reaction Sun (The Beast) (.170"Thick)(Washer Inside Is 74244B)	1	42298B
S74624AK	Shell Assembly, 700R4/4L60E Reaction Sun (With Inner Sprag Race & #664, With Bearing and Two Races)(Heavy Duty)(Sonnax)	1	
74624AA	Shell, 700R4/4L60E Reaction Sun (Washer Type) (Heavy Duty, Heat Treated Splines)(.135"Thick)	1	
74624AB	Shell, 700R4/4L60E Reaction Sun (Heavy Duty) " The Monster" (.165"Thick)	1	
74624B	Shell, 4L60E/4L65E Reaction Sun (Bearing Type)(Hardened)(.135"Thick) 2002-Up	1	
74624BK	Shell & Hub Kit, 4L60E/4L65E (Contains: 74602B, 74624B & 74241B) (This Kit Will Retro Fit Back To 1982)	1	
44630	Center Support, 700R4 Outer Race (Narrow Sprag Type) 1982-85	1	8663094
74630A	Center Support, 700R4/4L60E Outer Race (Wide) 1986-98	1	8681727
44631	Center Support Assemby, 700R4 (Narrow Sprag) 1982-85	1	
74631A	Center Support Assembly, 700R4/4L60E (Wide Sprag) 1986-91(Sprag Has Metal Cage)	1	8681727
74631B	Center Support Assembly, 4L60E (Wide Sprag) 1997-Up (Sprag Has Plastic Cage)(Can Use 74631A)	1	
74639	Clip, 700R4/4L60E Center Support (Anti-Clunk Spring)	1	6261415

PART #	SPRAGS & ONE WAY CLUTCHES	QTY.	REFERENCE #
74648	Sprag Assembly, 700R4 1st Design E1982	1	
74648A	Sprag Assembly, 700R4 2nd Design L1982-86	1	
74648B	Sprag Assembly, 700R4/4L60E 3rd Design (28 Element) 1987-E95 (Can Use 74648C)	1	8657928
74648C	Sprag Assembly, 4L60E 3rd Design (29 Element) L1995-Up (Single Cage)	1	24210960
74648CA	Sprag Assembly, 4L60E 5th Design (Use 74648CD)	1	

PART #	HARD PARTS (Continued)	QTY.	REFERENCE #
74648CD	Sprag Assembly, 4L60E 6th Design (W/Press in Sun Gear) 1997-Up	1	
74648D	Mechanical Diode, 700R4/4L60E (Drop-in Replacement)	1	
44654	Sprag, 700R4 Low/Reverse (Narrow) 1982-85	1	6261305
74654A	Sprag, 700R4/4L60E Low/Reverse (Wide) 1986-96	1	8681727
74654B	Sprag, 4L60E Low/Reverse (W/Plastic Cage) 97-Up	1	
74658	Sprag, 700R4 Forward Clutch 26 Elements 1982-86 (Also Fits 180/180C/4L30E 3rd Clutch Sprag)(Also KM172/175/171-5/172-5 175-5/177-8/A4AF1/A4BF1/A4BF2/W4A33 Low/Reverse .700" Thick)	1	10121024
74658B	Sprag, 700R4/4L60E Forward Clutch (28 Element) 1987-E95 (Can Use 74658C)	1	
74658C	Sprag, 4L60E Forward Clutch (29 Elements) L1995-Up (With Double Cage)(Can Use 74658B)	1	
74658D	Sprag, 700R4/4L60/4L60E/4L65E /4L70E Forward Clutch (29 Elements)(Dual Plastic Cage)(Borg Warner)	1	
44664	Inner Race, 700R4 Low/Reverse Sprag 1982-85	1	8673300
74668	Inner Race, 700R4/4L60E Forward Sprag 1986-98	1	8657529
74669	Outer Race, 700R4/4L60E Forward Sprag	1	24210961
74670	Input Shaft, 700R4/4L60E (Use 74554)	1	
S74670B	Input Shaft, 700R4/4L60E (30 Splines With Pilot) 1984-Up (Sonnax) (High Performance)	1	
74670G	Input Shaft, 4L60E/4L65E (30 Spline No Pilot)(Large Shaft)(Long Splines With O-Ring Behind Splines) 1998-04	1	
74670H	Input Shaft, 4L60E/4L65E (w/15 Teeth Reluctor)(30 Spline No Pilot)(Large Shaft) 2006-Up	1	
74678	Output Shaft, 700R4 (18 1/8" Long)(4 1/2" Long Splines)(Will Work For 3 1/2" Long Splines) 1982-91	1	8647951
74678-1	Output Shaft, 700R4 (18 1/8" Long) 1982-91 (3 1/2" Long Splines)(Will NOT Work For 4 1/2" Long Splines)	1	
74678A	Output Shaft, 700R4 (18 1/4" Long)(W/Electric Pick-Up) 1987-92 (4 1/2" Long Splines) (Will Work For 3 1/2" Long Splines)(With Governor Gear)	1	

© Whatever It Takes Transmission Parts. Inc.

74678A-1 ..... Output Shaft, 700R4 (18 1/4"Long)(W/ Electonic Pick-Up) 1987-92 (3 1/2" Long Splines)(Will NOT ..... Work For 4 1/2" Splines)(With Governor Gear) ..... 1 .....
74678AA ..... Output Shaft, 4L60E (18 1/4" Long) (No Governor Gear) 1992-Up (4 1/2" Long Splines) ..... 1 .....
S74678AA-HD .. Output Shaft, 4L60E (18 1/4" Long) 1992-Up (Sonnax)(Heavy Duty) ..... 1 .....
74678AB ..... Output Shaft, 4L60E (18 1/4" Long) (No Governor Gear) 1992-Up (3 1/2" Long Splines) ..... 1 .....
74678B ..... Output Shaft, 700R4 (4X4) (13 1/4" Long) (2.8L) 1982-92 ..... 1 .....
74678BA ..... Output Shaft, 4L60E (4X4) (13 1/4" Long) (No Governor Gear) 1992-Up ..... 1 .....
S74678BA-HD Output Shaft, 4L60E/4L65E/ 4L70E (4x4/AWD)(Heavy Duty) ..... 1 .....
74678C ..... Output Shaft, 700R4 (4x4) (13 3/4" Long)(All Except 2.8L) 1982-92 ..... 1 .....
74678D ..... Output Shaft, 700R4 (17 1/2" Long) (Corvette) 1982-84 ..... 1 .....
74678E ..... Output Shaft, 700R4 (17 1/4" Long) (Corvette) 1985-92 ..... 1 .....
S74680 ..... Governor, 700R4 (Inner & Outer Weight Is .286" To .303" Thick) (Fits 250, 305 & 350 Engine) ..... (Sonnax) 1
74680 ..... Governor, 700R4 (Inner & Outer Weight Is .286" To .303" Thick) ..... 1 .....
74680A ..... Governor, 700R4 (Inner & Outer Weight Is 247" Thick) 1 24202116
74680B ..... Governor, 700R4 (Inner & Outer Weight Is .330" Thick) (Diesel) 1 8642729
74680C ..... Governor, 700R4 (Inner & Outer Weight Is .187" Thick)(With Pointed Inner Weight & Outer ..... Weight Has Cut-Out) 1 8663388
74680CA ..... Governor, 700R4 (Inner & Outer Weight Is .187" Thick)(With Square Inner Weight) 1 8642750
74680D ..... Governor, 700R4 (Inner & Outer Weight Is .187" Thick)(With Pointed Inner Weight, Outer Weight ..... Has No Cut-Out) ..... 1 .....
S74680E ..... Governor, 4L60 (Applications: 1984-96 Corvettes, 1982-92 Camaro/Firebird, 1982-90 Caprice) ..... (OE # 24202117 or 8663388) (Sonnax) ..... 1 .....
A44681-4K ..... Governor Kit, 700R4 (Springs & Weights) 1982-Up (Superior) ..... 1 .....
74684 ..... Gear, 700R4 Governor With Pin (1.250" Overall Length) 1982-91 ..... 1 8663995
44686 ..... Cover, 700R4 Governor 1982-91 ..... 1 8767827
74687 ..... Clip, 700R4 Holds Governor Cover on 1982-91 ..... 1 6260040
74740 ..... Valve Body, 700R4 (No Switch) 1982-E87 ..... 1 .....
74740A ..... Valve Body, 700R4 (1 Switch) 1982-E87 ..... 1 .....
74740B ..... Valve Body, 700R4 (No Switch) (ECM Type, W/Aluminum Plug) 1986-87 ..... 1 .....
74740C ..... Valve Body, 700R4 (2 Switch) 1982-E87 ..... 1 .....
74740D ..... Valve Body, 700R4 (2 Switch) (ECM Type, W/Aluminum Plug) 1986-87 ..... 1 .....
74740E ..... Valve Body, 700R4 (3 Switch) 1982-E87 ..... 1 .....
74740F ..... Valve Body, 700R4 (4 Switch) 1982-E87 ..... 1 .....
74740G ..... Valve Body, 700R4 (No Switch) (Auxiliary Type) L1987-88 ..... 1 .....
74740GA ..... Valve Body, 700R4 (No Switch) (Auxiliary Type) 1989-92 (Converter Clutch Throttle Valve ..... Bore Eliminated) ..... 1 .....
74740H ..... Valve Body, 700R4 (1 Switch) (Auxiliary Type) L1987-88 ..... 1 .....
74740HA ..... Valve Body, 700R4 (1 Switch) (Auxiliary Type) 1989-92 (Converter Clutch Throttle Valve ..... Bore Eliminated) ..... 1 .....
74740J ..... Valve Body, 700R4 (2 Switch, Side By Side) (Auxiliary Type) L1987-92 ..... 1 .....
74740JA ..... Valve Body, 700R4 (2 Switch, 2 3/4" Apart) (Auxiliary Type) L1987-92 ..... 1 .....
74740K ..... Valve Body, 700R4 (3 Switch) (Auxiliary Type) L1987-92 ..... 1 .....
74740L ..... Valve Body, 700R4 (4 Switch) (Auxiliary Type) L1987-92 ..... 1 .....
74740N ..... Valve Body, 4L60E (4 Switch Non-PWM) (Aluminum) 1992-E95 (4 Switch Not Counting The ..... Manifold Pressure Switch) ..... 1 .....
74740NA ..... Valve Body, 4L60E (5 Switch)(Aluminum) L1995-E96 (5 Switch Not Counting The Manifold ..... Pressure Switch) ..... 1 .....
74740P ..... Valve Body, 4L60E (4 Switch) (Aluminum W/Vented Manual Valve) 1996-97 ..... 1 .....
74740PB ..... Valve Body, 4L60E (5 Switch) (Aluminum W/Vented Manual Valve) 1996-02 (Uses A Solenoid ..... #435 With 2 Flat Blades On End Of Solenoid) ..... 1 .....
74740PC ..... Valve Body, 4L60E (5 Switch) (Aluminum W/Vented Manual Valve) 2003-08 (Uses A Solenoid ..... #435 With 2 Prong Plastic Connector On Side Of Solenoid) (Does Not Fit Colorado Or ..... Canyon) ..... 1 .....
74740PD ..... Valve Body, 4L60E (5 Switch)(Aluminum W/Vented Manual Valve) 2003-08 (Uses A Solenoid ..... # 435 With 2 Prong Plastic Connector On Side OfSolenoid)(Fully Tested)(With S74741QAK & ..... S74741FK Already Installed)(Fits The Colorado & Canyon & Hummer H3) ..... 1 .....
74740R ..... Valve Body, 4L65E/4L70E (4 Switch)(Aluminum With Vented Manual Valve) 2009-Up ..... (With Solenoids) ..... 1 .....
74740S ..... Valve Body, 4L65E/4L70E (4 Switch)(Aluminum With Vented Manual Valve) 2009-Up ..... (With Solenoids)(Fits The Colorado & Canyon & Hummer H3) ..... 1 .....

PART #	VALVE BODY COMPONENTS	QTY.	REFERENCE #
74016A	Filter, 4L60E Shift Solenoid (Snaps on Body Plate) (Small)	1	8683769
74016P	Filter, 4L60E Presssure Control Solenoid (Snaps on Valve Body Plate)	1	8683768
74016R	Filter, 4L60E PWM Solenoid (Round) Snaps On Valve Body Plate 1992-93	1	
74495C	Filter Clip, 700R4/4L60E Holds Filter in Place	1	8634314
74741-1	Valve, 700R4 4th Shift (Allows 3-4 Shift at Maximum Throttle) (Transgo)	1	
74741-4B	Clip, 4L60E 1-2 & 3-4 & 3-2 & Torque Converter Clutch Solenoid Retainer Clip	1-4	8680781

© Whatever It Takes Transmission Parts. Inc.

PART #	VALVE BODY COMPONENTS (Continued)	QTY.	REFERENCE #
44741-5	Check Ball, 700R4/4L60E Valve Body (Steel)	9	6261179
74741-5	Check Ball, 700R4/4L60E Valve Body (Brass)	9	8654097
74741-4	Pin, 700R4 Holds Valve Sleeves in Valve Body	1-10	8628400
74741B	Sleeve, 700R4 Boost Valve Plunger (Valve Body) (Superior)	1	
74741C-1	Valve, 700R4 Converter Clutch 1982-Up	1	8634031
74741C-3	Spring, 700R4/4L60E TCC (In Valve Body)	1	
74741CS-1	Valve, 700R4 Torque Converter Clutch Shift (in Valve Body Under 74741VH)	1	
S74741E-2	Valve Sleeve, 4L60E/4L65E/4L70E Accumulator (DX Code)(This Sleeve Can Only Be Used To Replace OE Sleeves With DX Code)(Sonnax)	1	
S74741EK	Accumulator Assembly, 700R4/4L60E (.341” Valve, Sleeve, Plug, & 3 Springs) (Sonnax)	1	
S74741EAK	Accumulator Assembly, 700R4/4L60E (.330” Valve, Sleeve, Plug, & 3 Springs) (Sonnax)	1	
S74741EBK	Accumulator Assembly, 700R4/4L60E (.315” Valve, Sleeve, Plug, & 3 Springs) (Sonnax)	1	
S74741EJ-1K	Valve Kit, 4L60E/4L65E/4L70E 3-4 Shift 1992-Up (Contains: Oversized 3-4 Shift Valve & Matched Spring)(REquires: T-F-77754-TL42 & T-VB-Fix)	1	
T-F-77754-TL42	Tool Kit For S74741EJ-1K (Contains: Reamer, Guide Pin & Reamer Jig)		
S74741F-6	End Plug, 4L60E/4L65E Actuator Feed Limit Valve (5 Per Pack) (Sonnax)	1	77754-39
S74741FK	Limit Valve Kit, 4L60E Actuator Feed (Fixes Wrong Gear Starts, Clutch/Band Failure) (Requires T-77754-TL) (Sonnax)	1	
T-77754-TL	Reamer, 4L60E(For S74741FK) (Sonnax)	1	
44741G-5	Check Ball, 700R4/4L60E Valve Body (.250”) Torlon	1	
74741G-5B	Check Ball, 700R4/4L60E Valve Body (.375”) Torlon	1	
S74741G-6	Plug, 4L60E Forward/Reverse Abuse Bore Plug (Sonnax)	1	
A74741H-3K	Spring/Sleeve Kit, 4L60E 3-2 Downshift Valve Spring & Stop Sleeve (3 Springs & 3 Sleeves) (Superior)	1	
S74741HA-3	Spring, 4L60E/4L65E 3-2 Control Valve (Sonnax)	1	
S74741JSK	Valve Kit, 4L60E (Oversize 4-3 Sequence Valve, 3-4 Relay Valve, End Plug & O-Ring) Sonnax (Must Use T-77964-RM2)	1	
T-77964-RM2	Reamer, For S74741JSK (Sonnax)	1	
74741ME-1	Valve, 4L60E Manual (4 5/8” Long) 1992-97	1	
74741MF-1	Valve, 4L60E Manual (5 3/8” Long) 1998	1	
S74741N-1	Valve, 700R4 Throttle Valve (OE Style) (Sonnax)	1	
A74741N-3	Spring, 700R4 Anti Stick Throttle Valve (10 Per Pack)	1	
S74741N-1N	Valve, 700R4 Oversize Throttle Valve (Sonnax) (T-77968-RM Reamer Required)	1	
T-77968-RM	Reamer, 700R4(For S74741N-1N) (Sonnax)	1	
S74741N-3A	Spring, 700R4 Throttle Valve Plunger Valve (5 Per Pack) 1982-86 (Sonnax)	1	
S74741NAK	Throttle Valve Plunger & Sleeve Kit, 700R4 (93 Version) (Sonnax)	1	
S74741NBK	Throttle Valve Plunger & Sleeve Kit, 700R4 (94 Version) (Sonnax)	1	
S74741NCK	Throttle Valve Plunger & Sleeve Kit, 700R4 (Hi-Performance) (Sonnax)	1	
74741PS	Plate Saver, 700R4/4L60E (inserts Between Accumulator Cover to Valve Body Plate) (Use 74741VF)	1	
A74741Q	Valve, 4L60E TCC (P1870 Code Fix) 1995-00 (Teckpak) (For Extra O-Rings Sell T74741Q-9 & T76378V)	1	
A74741Q-1	Valve, 4L60E isolator (Longer Oversize) (For GM/SRTA Transmission) (Transgo) (3 Valves Per Kit)	1	
S74741Q-2	Sleeve, 4L60E Isolator Valve (For Bore Wear) (For Installation Must Use T-77754-SERV & T-77754-RM5 Tools) (Sonnax)	1	
T74741Q-9	O-Ring, 4L60E TCC Valve (Large O-Ring) 1995-Up (Teckpak)(Fits A74741Q & A74741QA)	AR	
A74741QA	Valve, 4L60E TCC (P1870 Code Fix) 2001-Up (Teckpak)(For Extra O-Rings Sell T74741Q-9 & T76378V)	1	
T-77754-SERV	Reamer, 4L60E Isolator Valve Sleeve (For S74741Q-2)	1	
T-77754-RM5	Reamer, 4L60E Isolator Valve Sleeve (For S74741Q-2)	1	
A74141QB	Valve, 4L65E/4L70E TCC (P1870 & P1728 Code Fix) 2004-Up (Teckpak)(Use For Canbus Control)	1	
S74741QK	Valve Kit, 4L60E Torque Converter Clutch Regulator W/Sleeve 1993-97 (Sonnax) (T-77754-R2 Reamer)	1	
74741QAK	Valve Kit, 4L60E Torque Converter Clutch Regulator W/Sleeve 1998 (Sonnax) (T-77754-R2 Reamer)	1	
T-77754-R2	Tool, 700R4 Reamer For Oversize Torque Converter Clutch Regulator Valve (Sonnax) (S74741QK & S74741QAK)	1	
A74741R-6	Plugs, Reverse Abuse Plugs (Enough for 5 units) TransGo	1	
S74741S-1	Valve, 4L60E/4L65E 2-3 Shift (Heavy Duty) (Sonnax)	1	
S74741UK	Valve Assembly, 4L60E/4L65E Forward Abuse & Reverse Abuse (Contains: 1 Valve, 1 Spring & 1 Bore Plug)(Sonnax)(Will Repair Only One Forward Or One Reverse Assembly)	1	
44741V-5	Check Ball, 700R4/4L60E Valve Body (.250”) Viton	AR	
74741VF	Fix Kit, 700R4 Valve Body Corner Plate	1	
74741VHK	Lock-Up Kit, 700R4 Lockup in 4th Gear Only (Superior) 1982-89 (Allows Lock-Up Without Computer)(Comes With 5 Calibrated Springs For Varying Lock-Up Speeds)	1	8642970
VB-101	Repair Kit, Fixes 5 Valve Body Plate Holes (Most W/1/4” Check Balls)	1	

© Whatever It Takes Transmission Parts. Inc.

PART #	HARD PARTS (Continued)	QTY.	REFERENCE #
74744	Auxiliary Valve Body, 700R4 Aluminum W/Cast Iron 3 Bolt Cover 1982-91	1	
A74747	Plate, 700R4 Valve Body (Transgo) 1982-Up	1	
74747AA	Plate, 700R4 Valve Body (Stamped P) 1982-86 (All 1982-86 Retro Fit)	1	8654482
74747AB	Plate, 700R4 Valve Body (Stamped S) 1982-86 (All 1982-86 Retro Fit)	1	8654483
74747AC	Plate, 700R4 Valve Body (Stamped T) 1982-86 (All 1982-86 Retro Fit)	1	8654484
74747AD	Plate, 700R4 Valve Body (Stamped AD) Auxiliary Type 1987	1	8663587
74747AE	Plate, 700R4 Valve Body (Stamped AF) Auxiliary T ype 1987	1	8663589
74747AM	Plate, 700R4 Valve Body (Stamped AM) Auxiliary Type 1987	1	8663595
74747AP	Plate, 700R4 Valve Body (Stamped AP) Auxiliary Type 1987	1	
74747AT	Plate, 700R4 Valve Body (Stamped AT) Auxiliary Type 1987	1	
74747BD	Plate, 700R4 Valve Body (Stamped BB) Auxiliary Type 1988-91	1	8667355
74747BE	Plate, 700R4 Valve Body (Stamped BE) Auxiliary Type 1988-91	1	
74747BF	Plate, 700R4 Valve Body (Stamped BF) Auxiliary Type 1988-91	1	8667356
74747BM	Plate, 700R4 Valve Body (Stamped BM) Auxiliary Type 1988-91	1	8667357
74747BS	Plate, 700R4 Valve Body (Stamped BS) Auxiliary Type 1988-91	1	8667825
74747BT	Plate, 700R4 Valve Body (Stamped BT) Auxiliary Type 1988-91	1	
74747BU	Plate, 700R4 Valve Body (Stamped BU) Auxiliary Type 1988-91	1	8667475
74747BV	Plate, 700R4 Valve Body (Stamped BV) Auxiliary Type 1988-91	1	8673139
74747BX	Plate, 700R4 Valve Body (Stamped BX) Auxiliary Type 1988-91	1	8667700
74747CD	Plate, 700R4 Valve Body (Stamped CD) Auxiliary Type 1988-91	1	8673164
74747DA	Plate, 700R4 Valve Body (Stamped DA) Auxiliary Type 1988-91	1	8673633
74747E	Plate, 4L60E Valve Body (Transgo) 1993-94	1	
74747EA	Plate, 4L60E Valve Body (Transgo) 1995	1	
74747EB	Plate, 4L60E Valve Body (Transgo) 1996-2007 (Except 2005 Corvette)	1	
74747KB	Plate, 4L60E Valve Body (Stamped KB)	1	24202372
74747KK	Plate, 4L60E Valve Body (Stamped KK)	1	24202366
74747KL	Plate, 4L60E Valve Body (Stamped KL)	1	
74747KX	Plate, 4L60E Valve Body (Stamped KX)	1	8686041
74747LC	Plate, 4L60E Valve Body (Stamped LC)	1	24200361
74747LE	Plate, 4L60E Valve Body (Stamped LE)	1	
74747LL	Plate, 4L60E Valve Body (Stamped LL)	1	
74747LP	Plate, 4L60E Vavle Body (Stamped LP)	1	24202370
74747LT	Plate, 4L60E Valve Body (Stamped LT)	1	24203367
74747MP	Plate, 4L60E Valve Body (Stamped MP)	1	24201484
74747MU	Plate, 4L60E Valve Body (Stamped MU)	1	24201487
74747MV	Plate, 4L60E Valve Body (Stamped MV)	1	
74747MX	Plate, 4L60E Valve Body (Stamped MX)	1	
74747NA	Plate, 4L60E Valve Body (Stamped NA)	1	24201493
74747PC	Plate, 4L60E Valve Body (Stamped PC Or PY)	1	
74747PL	Plate, 4L60E Valve Body (Stamped PL)	1	24203947
74747PM	Plate, 4L60E Valve Body (Stamped PM)	1	
74747PN	Plate, 4L60E Valve Body (Stamped PN)	1	
74747PT	Plate, 4L60E Valve Body (Stamped PT)	1	
74747PZ	Plate, 4L60E Valve Body (Stamped PZ)	1	24207492
74747R	Plate, 4L60E Valve Body 2005 (Corvette Only)	1	
74747T	Plate, 4L60E Valve Body 2007-08 (Except Hybrid)	1	
74747TV	Plate, 4L60E Valve Body (Stamped TV+D688)	1	
74747U	Plate, 4L60E Valve Body 2009-13	1	
74748	Plate, 700R4 Holds Valve Body Plate to Case (4 Bolt)(4 1/8” Long) 1982-92	1	
74748B	Plate, 4L60E Holds Valve Body Plate to Case (3 Bolt)(3 15/16” Long) 1993-Up	1	8682792
74748C	Plate, 4L60E (Colorado/Canyon) Holds Valve Body Plate To Case (8 3/16” Long) 2004-Up	1	
74750A	Bell Housing, 4L60E 4.3L V-6 & V-8 (Cast # 24200877) 1996-97	1	
74750AA	Bell Housing, 4L60E 4.3L V-6 & V-8 (Cast # 24206579) 1998-Up (Starter at 8:30) (Has 4 Extra Dust Cover Bolts)	1	24206580
74750AB	Bell Housing, 4L60E V-8 (Cast # 24206952) 1998-Up (Starter at 8:30) (Uses 7 Bolts to Motor)	1	24206953
74750AC	Bell Housing, 4L60E V-8 (Holden) Starter at 4:00 1998-Up	1	24206438
74750B	Bell Housing, 4L60E (Square top) (Starter at 4:00) (Cast # 24205617) 1998-Up	1	
74750C	Bell Housing, 4L60E (Round Bell, Corvette) 1997-98	1	
74750D	Bell Housing, 4L60E (4.2L)(Starter at 1:00) Top Bolts 5 1/2” (Cast # 24209836) (Colorado/Canyon)	1	
74750E	Bell Housing, 4L60E (Starter At 2:00)(V-8) Top Bolts 5 1/2” (Cast # 24220855) (Colorado/Canyon)	1	
74760	Case, 700R4 2WD (All Except 2.8L Non Auxiliary) 1982-E87	1	
74760A	Case, 700R4 2WD & 4X4 (2.8L V-6 only Non Auxiliary) 1982-E87	1	
74760AA	Case, 700R4 2WD & 4X4 (2.8L V-6 only Non Auxiliary) E1987 (Looks Like Auxiliary Type But Has No Orificed Cup Plug In Governor Bore)	1	
74760B	Case, 700R4 4X4 (All Except 2.8L Non Auxiliary) 1982-E87	1	

© Whatever It Takes Transmission Parts. Inc.

PART #	HARD PARTS (Continued)	QTY.	REFERENCE #
74760BA	Case, 700R4 4X4 (All Except 2.8L Non Auxiliary) E1987 (Looks Like Auxiliary Type But Has No Orificed Cup Plug In Governor Bore)	1	
74760BB	Case, 700R4 2WD (All Except 2.8L Non Auxiliary) E1987 (Looks Like Auxiliary Type But Has No Orificed Cup Plug In Governor Bore)	1	
74760C	Case, 700R4 2WD (All Except 2.8L Auxiliary Type) L1987-91 (Also Fits 4.3L In Full Size Truck)	1	
74760D	Case, 700R4 2WD & 4X4 (2.8L V-6 only) Auxiliary Type L1987-91	1	
74760E	Case, 700R4 4X4 (All Except 2.8L) Auxiliary Type L1987-91	1	
74760F	Case, 700R4 2WD & 4X4 (4.3L In S-10 Truck Only) L1987-91	1	
74760G	Case, 4L60E 2wd (All V-8 & 4.3L In Full Size Truck) 1992-95 (W/1 Piece Case)	1	8686951
74760GA	Case, 4L60E 2wd (All V-8 & 4.3L In Full Size Truck) 1996 (W/1 Piece Case) (W/PRNDL Switch)	1	
74760GB	Case, 4L60E 2wd (All V-8 & 4.3L In Full Size Truck) 1996-97 (W/1 Piece Case) (W/PRNDL Switch & Shift Cable Bosses)	1	
74760H	Case, 4L60E 4X4 (All V-8 & 4.3L In Full Size Truck) 1992-95 (W/1 Piece Case)	1	
74760HA	Case, 4L60E 4X4 (All V-8 & 4.3L In Full Size Truck) 1996 (W/1 Piece Case) (W/PRNDL Switch)	1	
74760HB	Case, 4L60E 4X4 (All V-8 & 4.3L In Full Size Truck) 1996-97 (W/1 Piece Case) (W/PRNDL Switch & Shift Cable Bosses)	1	
74760HC	Case, 4L60E 2WD & 4X4 (4.3L In S-10 Truck) 1992-95 (W/1 Piece Case) (Also Fits V-8 Camaro & Firebird 1992-95)	1	
74760HD	Case, 4L60E 2WD & 4X4 (4.3L In S-10 Truck) 1996 (W/1 Piece Case) (W/PRNDL Switch) (Also Fits V-8 Camaro & Firebird 1996)	1	
74760HE	Case, 4L60E 2WD & 4X4 (4.3L In S-10 Truck) 1996-97 (W/1 Piece Case) (W/PRNDL Switch & Shift Cable Bosses) (Also Fits V-8 Camaro & Firebird)	1	
74760J	Case, 4L60E 2WD/4X4 (2.2L/3.4L) 1992-95 (W/1 Piece Case)	1	24200360
74760JA	Case, 4L60E 2WD/4X4 (2.2L/3.4L) 1996 (W/1 Piece Case) (W/PRNDL Switch)	1	
74760JB	Case, 4L60E 2WD/4X4 (2.2L/3.4L) 1996 (W/1 Piece Case) (W/PRNDL Switch)(W/Shift Cable Bosses)	1	
74760L	Case, 4L60E/4L65E (Bolt-on Type Bell) 1996-97 (Can Use 74760M)	1	
74760M	Case, 4L60E/4L65E (Bolt-on Type Bell) (W/Improved Drain Back) The Outer Pump Seal Is An O-Ring 1998-9/2002	1	
74760MC	Case, 4L60E/4L65E (Bolt On Type Bell) (W/Improved Drain Back) The Outer Pump Seal Is An O-Ring (This Is For A Corvette, With Rear Mountin Bosses On Each Side) 1988-9/02	1	
74760N	Case, 4L60E/4L65E (Bolt-On Type Bell)(The Outer Pump Seal Is The Metal/Rubber Compression Type) 9/2002-E07	1	
74760NA	Case, 4L60E/4L65E (Bolt On Type Bell)(The Outer Pump Seal Is The Metal/Rubber Compression Type) L2007-08	1	
74760P	Case, 4L60E/4L65E (Bolt On Type Bell)(Uses A Internal Mode Switch Instead Of A External PRNDL Switch)(Use Aluminum Cooler Line Fittings) 2009-13	1	

PART #	CASE COMPONENTS	QTY.	REFERENCE #
S74480C	Capsule W/Check Ball, 700R4/4L60E 3-4 Accumulator (Fits in Case) 1987-96	1	8634400
S74480D	Ball & Capsule, 700R4/4L60E 3rd Accumulator (Improve 2-3 Shift Feel) (in Case Under Valve Body) (Sonnax)	1	
74480E	Ball & Capsule, 700R4/4L60E (In Case Under Low/Reverse Piston) 1988-Up	1	8663890
74483B	Cup Plug, 700R4/4L60E Park Pawl Shaft	1	8620318
44487	GM E-Clips	1	
44761A	Case Saver, 700R4/4L60E (4 Piece Type) (4 Per Pack)	1	
44761B	Case Saver, 700R4/4L60E 1 Piece	1	
44761D	Use 74761DAC	1	
74761DAC	Case Saver, 700R4/4L60E/4L65E (Center Support Modification)(Contains: Center Support Outer Race (Wide Sprag Type), Retainer Plate, & 6 Allen Head Screws)(Adapt-A-Case)	1	

PART #	HARDPARTS (Continued)	QTY.	REFERENCE #
74765	Pan, 700R4/4L60E Bottom (Uses a Round Magnet) 1982-96	1	86638948
74765A	Pan, 4L60E/4L65E Bottom (Trucks & Vans) 1997-12/03	1	
74765AA	Pan, 700R4/4L60E Bottom (Uses a Square Magnet) 1987-96	1	
74765B	Pan, 4L60E Bottom (Corvette) (Round Center Pump) 1997-Up	1	
74765C	Pan, 4L60E/4L65E Bottom (Trucks & Vans) 12/03-Up (No Drain Plug) Has Integral Sipstick Stop (3” Deep With A 2 1/4” Deep Raised Step Across Rear Of Pan)	1	
74765D	Pan, 4L60E/4L65E Bottom (No Drain Plug) Has Integral Dipstick Stop (3” Deep With A Large Rounded Hump From Front To Back On The Passengers Side)(Colorado/Canyon)	1	
74770	Extension Housing, 700R4/4L60E 2WD (7 1/4” Long) (Uses 2 Bolt Mount on Bottom) 1982-95	1	
74770A	Extension Housing, 700R4/4L60E 2WD (No Mount or Bracket) 1982-95	1	8673406
74770B	Extension Housing, 700R4/4L60E 2WD (2 Hole Side Bracket Type) 1982-95	1	
74770C	Extension Housing, 700R4/4L60E 2WD (3 Hole Side Bracket Type) 1982-95	1	

© Whatever It Takes Transmission Parts. Inc.

74770D.....Extension Housing, 700R4/4L60E 4X4 (For 208 Transfer Case) 1982-95 (4 Bolts to Case)
.....(Cast Iron) (Cast # 15628188) (3 1/2" From Gasket To Gasket) (Mount Surface Does
.....Not Hang Below Gasket).....1 .....
74770DA.....Extension Housing, 700R4/4L60E 4X4 (For 208 Transfer Case) 1982-95 (4 Bolts to Case)
.....(Cast Iron) (Cast # 14020853) (4 15/16" From Gasket To Gasket) (10 5/8" From Top
.....Center Bolt Down To Mount).....1 .....
74770DB.....Extension Housing, 700R4/4L60E 4X4 (For 208 Transfer Case) 1982-95 (4 Bolts to Case)
.....(Cast Iron) (Cast # 14038663) (3 1/4" From Gasket To Gasket) (10 5/8" From Top
.....Center Bolt Down To Mount).....1 .....
74770E .....Extension Housing, 700R4/4L60E 4X4 (For 207/231 Transfer Case) 1982-95 (4 Bolts to
.....Case) Aluminum With Side Threaded Holes (Cast # 14040514).....1 .....
74770EA.....Extension Housing, 700R4/4L60E 4X4 (For 207 Transfer Case) 1982-95 (4 Bolts To Case_
.....Aluminum Without Side Threaded Holes .....1 .....
74770F .....Extension Housing, 4L60E 2WD (4 Bolts To Case) (No Mount/Bracket, W/1" Speed Sensor
.....Hole) 1996-97 .....1 .....
74770FA .....Extension Housing, 4L60E 2WD (4 Bolts To Case) (2 Bolt Bottom Mount, W/1" Speed Sensor
.....Hole) 1996-97 .....1 .....
74770FB.....Extension Housing, 4L60E 2WD (4 Bolts To Case) (3 Bolt Side Bracket W/1" Speed Sensor
.....Hole) 1996-97 .....1 .....
74770G.....Extension Housing, 700R4/4L60E 2WD (Corvette) 1982-95.....1 8682456
74770H.....Extension Housing, 4L60E 2WD (9 5/8" Long) (6 Bolts To Case) (2 Bolt Bottom Mount) (W/1"
.....Speed Sensor Hole) 1996-Up.....1 .....
74770J.....Extension Housing, 4L60E 2WD (9 5/8" Long) (6 Bolts To Case) (2 Bolt Bottom Mount, W/3 Bolt
.....Side Bracket) (W/1" Speed Sensor Hole) 1996-Up.....1 .....
74770K .....Extension Housing, 4L60E 4x4 (6 Bolts To Case) (4" Long) 1996-Up (Cast # 15963696) .....1 .....
74770KA.....Extension Housing, 4L60E 4x4 (6 Bolts To Case) (4" Long) 1996-Up (Cast # 15963697) .....1 .....
74770KB.....Extension Housing, 4L60E 4x4 (6 Bolts To Case) (4" Long) 1996-Up (Cast #15028096) .....1 .....
74770KC.....Extension Housing, 4L60E 4x4 (6 Bolts To Case) (4" Long) 1996-Up (Cast # 15028097) .....1 .....
74770KD.....Extension Housing, 4L60E 4x4 (6 Bolts To Case) (4 1/2" Long) 1996-Up (Cast # 15724744) .....1 .....
74770KE.....Extension Housing, 4L60E 4x4 (6 Bolts To Case) (4 1/2" Long) 1996-Up (Cast # 1597197) .....1 .....
74770KF .....Extension Housing, 4L60E 4X4 (6 Bolts To Case)(4 1/2"Long) 1996-Up (Cast # 15067970).....1 .....
74770L.....Extension Housing, 4L60E 4X4 (6 Bolts to Case) (5" Long) 1996-Up
.....(Aluminum) (6 Bolts to Transfer Case) (Cast # 15005474).....1 .....
74770LA .....Extension Housing, 4L60E 4X4 (6 Bolts to Case) (5" Long) 1996-Up
.....(Aluminum) (6 Bolts to Transfer Case) (Cast # 15726252).....1 .....
74770LB .....Extension Housing, 4L60E 4x4 (6 Bolts To Case)(5 1/4" Long) 1996-Up (Aluminum)(6 Bolts To
.....Transfer Case)(Cast # 15981067).....1 .....
74770LC .....Extension Housing, 4L60E 4x4 (6 Bolts To Case)(4 3/4" Long)(Aluminum)(6 Bolts To Transfer
.....Case)(Cast # 24235765).....1 .....
74770M.....Extension Housing, 4L60E (Colorado/Canyon 4x4) 6 Bolts To Case (4" Long) Aluminum
.....(With 2.430"OD Rear Seal) 5 Bolts To Transfer Case (Cast # 24231140) 2004-06.....1 .....
74770MA .....Ext Hsg, 4L60E/65E (Colorado/Canyon) 4x4 (6 Bolts To Case) (4 3/8" Long W/2.430"OD
.....Rear Seal)(5 Bolts To Transfer Case)(Cast # 97287227) 2004-06 .....1 .....
74774A .....Speed-O-Meter Housing, 700R4 (2"OD Plastic) (For Metal Shaft Gear) (2 1/4" Long) .....1 .....
74774B .....Speed-O-Meter Housing, 700R4 (2"OD Aluminum) (2 Prong) (Gear Type, Inline Plug-in).....1 .....
44774BA.....Speed-O-Meter Housing, 700R4 (2"OD Plastic) (Cable Type) .....1 .....
44774BAHD....Speed-O Housing, 700R4 (2" Aluminum)(.315"ID Bore)(For 34-39 Teeth Plastic Shaft Gear).....1 .....
74774C.....Speed-O-Meter Housing, 700R4 (2"OD Plastic) (2 Prong) (Gear Type, Offset Plug-in) .....1 .....
44774C.....Speed-O Housing, 700R4 (2" Plastic)(For 40 Teeth to 45 Teeth Plastic Shaft Gear).....1 .....
74774E .....Speed-O-Meter Housing, 700R4 (2"OD Plastic) (2 Prong) (Electric Magnetic) .....1 .....
44775C.....Bolt, 700R4/4L60E/4L65E Converter (15mm Hex Head) Up To 2002 .....3-6.....
44774CHD.....Speed-O Housing, 700R4 (2" Aluminum)(.338"ID Bore)(For 40-45 Teeth Plastic Shaft Gear)
.....(The Gear Shaft Hole Is Off Center)(The Housing Is Casted 40-43 Teeht But Also Works
.....For 44-45 Teeth).....1 .....
74776A .....Bolt, 4L60E Holds Bell Housing to Case 1996-Up 8 24203265
74776AK.....Bolt Set, 4L60E Bell Housing to Case (8 Per Set) .....1 .....
74777K .....Bolt Set, 700R4 Pump to Case (Non O-Ring Type) 1982-E86 .....1 .....
74777AK.....Bolt Set, 700R4/4L60E/4L65E Pump to Case (O-Ring Type) L1986-Up .....1 .....
74778K .....Bolt Set, 700R4/4L60E Holds Stator to Body.....1 .....
74779K .....Bolt Set, 700R4/4L60E/4L65E Pan to Case (16 Pieces) 82-Up .....1 .....
74781K .....Bolt Set, 700R4/4L60E Holds Extension Housing to Case 1982-95.....1 .....
74781AK.....Bolt Set, 4L60E Holds Extension Housing to Case 1996-Up.....1 .....
74782K .....Bolt Set, 700R4 Holds Valve Body to Case 1982-91 .....1 .....
74782AK.....Bolt Set, 4L60E Holds Valve Body to Case 1992-Up.....1 .....
74791K Bolt Set, 700R4 Holds Auxiliary Valve Body to Case L1987-91 1
74792K .....Bolt Set, 700R4 Holds 1-2 Accumulator Cover on 1982-91 .....1 .....
74793.....Bolt, 700R4/4L60E Holds Speed-O-Meter Bracket on (10MM Head).....1 .....
34797B .....Bolt, 700R4/4L60E/4L65E Holds External Shift Lever (Metric).....3 .....
44839.....Magnet, 700R4/4L60E Pan (Rectangular).....1 .....
74842.....Bracket, 700R4/4L60E Holds Large Speed-O-Meter Housing in Place.....1 1254856

© Whatever It Takes Transmission Parts. Inc.

PART #	HARDPARTS (Continued)	QTY.	REFERENCE #
S74843E	Bracket, 4L60E Wire Harness Connector (Sonnax)	1	
74846E	Bracket, 4L60E Shift Cable (Uses 2 Pan Bolts 3” Apart) 1996-Up (With No Shift Cable Bosses On Case)(Also Allows 1992-95 Cases To Be Used For 1996-Up)(Sonnax)	1	15982505
S74846E	Bracket, 4L60E Shift Cable (Uses Pan Bolts) 1996-97 (Sonnax) (Use On 1996-97 Cases With No Shift Cable Bracket Bosses)	1	
74846EA	Bracket, 700R4/4L60E Shift Cable (Uses 2 Pan Bolts 2” Apart)(With 1.275”ID Cable Hole)	1	
74846EB	Bracket, 4L60E Shift Cable (Case Mount)(2 Bolts 5” Apart)(W/Wire Harness Bracket) 1996-Up	1	
74846EC	Bracket, 4L60E Shift Cable (Case Mount)(2 Bolts 5” Apart)(No Wire Harness Bracket) 1996-Up	1	
74847A	Gear, 700R4 Speed-O-Meter Drive (15 Teeth Gray)	1	8642620
44847CA	Gear, 700R4 Speed-O-Meter Drive (17 Teeth, Red) (5/16” Slot)	1	
44847D	Gear, 700R4 Speed-O-Meter Drive (18 Teeth, Green) (5/16” Slot)	1	
44847DW	Gear, 700R4 Speed-O-Meter Drive (18 Teeth, Blue) (1/2” Slot)	1	
44847DZ	Gear, 700R4 Speed-O-Meter Drive (19 Teeth, Yellow) (5/16” Slot)	1	
44847E	Gear, 700R4 Speed-O-Meter Drive (20 Teeth, Brown) (5/16” Slot)	1	
74847P	Pick-Up Wheel, 700R4/4L60E (40 Teeth)	1	24202711
34848A	Gear, 700R4 Speed-O-Meter Driven (34 Teeth, Green) (W/Plastic Shaft)	1	
34848B	Gear, 700R4 Speed-O-Meter Driven (35 Teeth, orange) (W/Plastic Shaft)	1	
74848BA	Gear, 700R4 Speed-O-Meter Driven (35 Teeth, orange, Metal Shaft)	1	
34848C	Gear, 700R4 Speed-O-Meter Driven (36 Teeth, White) (W/Plastic Shaft)	1	
34848D	Gear, 700R4 Speed-O-Meter Driven (37 Teeth) Red (With Plastic Shaft)	1	
74848E	Gear, 700R4 Speed-O-Meter Driven (25 Teeth, Blue)	1	3860348
34848E	Gear, 700R4 Speed-O-Meter Driven (38 Teeth, Blue) (W/Plastic Shaft)	1	
74848EA	Gear, 700R4 Speed-O-Meter Driven (38 Teeth, Blue, Fits Metal Shaft)	1	
34848F	Gear, 700R4 Speed-O-Meter Driven (39 Teeth, Brown) (W/Plastic Shaft)	1	
34848G	Gear, 700R4 Speed-O-Meter Driven (40 Teeth, Black) (W/Plastic Shaft)	1	
74848H	Gear, 700R4 Speed-O-Meter Driven (41 Teeth, Yellow)(Fits Metal Shaft)	1	
34848H	Gear, 700R4 Speed-O-Meter Driven (41 Teeth, Yellow) (W/Plastic Shaft)	1	
34848HA	Gear, 700R4 Speed-O-Meter Driven (42 Teeth, Green) (W/Plastic Shaft)	1	
34848J	Gear,700R4 Speed-O-Meter Driven (43 Teeth, Purple) (W/Plastic Shaft)	1	
34848K	Gear, 700R4 Speed-O-Meter Driven (44 Teeth, Gray) (W/Plastic Shaft)	1	
34848L	Gear, 700R4 Speed-O-Meter Driven (45 Teeth, Blue) (W/Plastic Shaft)	1	
44849A	Clip, 700R4 Speed-O Drive Gear (Long Narrow Type)	1	
74860AK	Snap Ring Kit, 700R4 1982-Up	1	
74861	Snap Ring, 700R4/4L60E Holds 3-4 Pressure Plate in .089”	1	8663636
74861A	Snap Ring, 700R4/4L60E Holds 3-4 Pressure Plate in .062”	1	
74876	Snap Ring, 700R4/4L60E Holds Forward Pressure Plate in Drum	1	8642170
74877	Snap Ring, 700R4/4L60E Holds Overrun Retainer	1	
74881	Snap Ring, 700R4/4L60E Holds Sprag Together	1	8647083
74882	Snap Ring, 700R4/4L60E Holds Front Planet Ring Gear to Hub	1	8642201
74883	Snap Ring, 700R4/4L60E Holds Center Support in Case	1	6261416
74884	Snap Ring, 700R4/4L60E Holds Sprag to Center Support	1	6261051
74886	Snap Ring, 700R4/4L60E Holds Low/Reverse Retainer In (Also Fits Sun Gear To Bowl)	1	8681553
74886B	Snap Ring, 700R4/4L60E Holds Low/Reverse Retainer (Corvette)	1	6261041
44887	Snap Ring 4L60E Snap Ring Holds Seal to Speed-O-Housing	1	
74889	Snap Ring, 700R4/4L60E Holds Hub to Rear Ring Gear	1	8642220
74892	Snap Ring, 700R4/4L60E Holds Reverse Input Pressure Plate in	1	8667022
74893	Snap Ring, 700R4/4L60E Holds Retainer to Reverse Input	1	8628059
74894	Snap Ring, 700R4/4L60E Front Planet to Output Shaft	1	8654141
74896	Snap Ring, 700R4/4L60E Holds 2-4 Servo in Case	1	8642124
74900	Servo Assembly, 700R4/4L60E 2-4 (Cast # 553)	1	
74900A	Servo Assembly, 700R4/4L60E 2-4 (Cast # 554)	1	
74900B	Servo Assembly, 700R4/4L60E 2-4 (Cast D758 # 8642093) (Corvette)	1	
74900D	Servo Assembly, 4L70E 2-4 (Cast # 159)	1	
74901	Spring, 700R4/4L60E Servo Return 1982-95	1	8642273
74901B	Spring, 700R4/4L60E 2-4 Servo Return 1982-Up	1	
74901BK	Spring Kit, 700R4/4L60E 2-4 Servo Return (Blue) (3 Pieces)	1	
74902	Piston, 700R4/4L60E 4TH Servo	1	8642478
74902H	Piston, 700R4/4L60E 4TH Servo (Super) (Superior)	1	
S74902H	Piston, 700R4/4L60E 4TH Servo (Super Hold) (Sonnax)	1	
74904	Cover, 700R4/4L60E 2-4 Servo	1	8642979
74905	Piston, 700R4/4L60E 2ND Apply Servo (Cast # 553)	1	8642613
74905B	Piston, 700R4/4L60E 2ND Apply Servo (Cast # 093) (Corvette)	1	8642079
A74905BK	Piston Kit, 700R4/4L60E 2nd Apply Servo (Corvette) (Contains: #905 & 907) (Does Not Come With Rings #74194T & 74195T)	1	
A74905BK-1	Piston Kit, 700R4/4L60E 2nd Apply Servo(Corvette) (Contains: #905 & 907)(Comes With Rings 74194T,74195T,74366	1	
S74905BK	Piston Kit, 700R4/4L60E 2nd Apply Servo (Corvette) (Contains: #905, 907 & Seals)(Sonnax)	1	

© Whatever It Takes Transmission Parts. Inc.

74905BAK .....Piston Kit, 700R4 2nd Apply (Corvette)(Contains: # 905, 907, Two # 927 (Accumulator Pistons), ...& TV Boost Valves & Sleeve).....1 .....
74905H .....Super Servo 700R4/4L60E 2nd Apply (Superior) .....1 .....
S74907A-2.....Sleeve, 700R4/4L60E 2nd Servo (Sonnax) .....1 .....
T74908 .....Pin, 700R4/4L60E 2nd Apply Servo (Extendo) 1982-96 (Teckpak) .....1 .....
74908.....Pin, 700R4/4L60E 2nd Apply Servo (1 Ring) (5.010" Long) .....1 .....
74908A .....Pin, 700R4/4L60E 2nd Apply Servo (2 Ring) (5.060" Long) .....1 .....
74908B .....Pin, 700R4/4L60E 2nd Apply Servo (3 Ring) (5.087" Long) .....1 .....
74908C .....Pin, 700R4/4L60E 2nd Apply Servo (No Ring) (5.121" Long).....1 8680501
T74908E .....Pin, 4L60E/4L65E 2nd Apply Servo (Extendo) 1997-Up.....1 .....
S74908EK .....Pin W/Seals, 4L60E/4L65E/4L70E Servo (Extra Long)(Hi-Performance)(Sonnax).....1 .....
74916.....Anchor Pin, 700R4/4L60E Holds Band .....1 .....
74925A .....Accumulator Assembly, 700R4 1-2 Accumulator (.310"OD Pin) 1982-91 .....1 .....
74925B .....Accumulator Assembly, 4L60E 1-2 Accumulator (Cast # 8684428)(.230"OD Pin) 1992-Up.....1 .....
74925BA.....Accumulator Assembly, 4L60E 1-2 Accumulator (Cast # 24219937)(.230"OD Pin) 2002-Up .....(Will Retro Fit To 1993).....1 .....
74926A .....Spring, 700R4/4L60E 1-2 & 3-4 Accumulator (Orange, Cone, Shaped) (Outer) .....1-2.....8663385
74926AA.....Spring, 4L60E 1-2 & 3-4 Accumulator (Orange) (Inner).....1-2.....8685655
74926B .....Spring, 700R4/4L60E 1-2 & 3-4 Accumulator (No Color) (Outer) .....1-2.....8673387
74926BA.....Spring, 4L60E 1-2 & 3-4 Accumulator (Pink) (Inner).....1-2.....8685656
74926C .....Spring, 700R4/4L60E 1-2 & 3-4 Accumulator (Purple) (Outer).....1-2.....8634163
74926D .....Spring, 700R4/4L60E 1-2 & 3-4 Accumulator (Red) (Outer).....1-2.....8634703
74926E .....Spring, 700R4/4L60E 1-2 & 3-4 Accumulator (Green) (Outer) .....1-2.....8654554
74926F .....Spring, 700R4/4L60E 1-2 & 3-4 Accumulator (No Color) (Inner).....1-2.....8684431
74926G.....Spring, 700R4/4L60E 1-2 & 3-4 Accumulator (Yellow) (Outer) .....1-2.....8663384
74926H .....Spring, 700R4/4L60E 1-2 & 3-4 Accumulator (White) (Outer) .....1-2.....8654183
S74926HP .....Spring, 700R4/4L60E 1-2 Accumulator (Hi-Performance) (Sonnax) (5 Per Bag) .....1 .....
74926J.....Spring, 4L60E 1-2 & 3-4 Accumulator (No Color) (Outer).....1-2.....24209794
74926L.....Spring, 4L60E 1-2 & 3-4 Accumulator (Blue) (Outer).....1-2.....
74927.....Piston, 700R4 1-2, 3-4 & Forward Accumulator (.310"OD Pin) 1982-91 (Also Fits 4L60E/4L65E .....3-4 Accumulator 1992-Up)(No O-Ring In The Taiwan Piston, 54352A Is The O-Ring).....1-3.....
A74927K.....Piston W/O-Ring, 700R4 1-2, 3-4 & Forward Accumulator (.310" Pin Diameter)(Also Fits .....4L60E/4L65E 3-4 Accumulator 1992-Up) .....1-3.....
S74927K.....Piston Kit, 700-4R/4L60E 1-2 & 3-4 Accumulator (W/Seals & Balls)(Pinless) 1982-Up (Sonnax)..1 .....
S74352AK .....Replacement Seals, 700R4/4L60E For S74927K (Sonnax) .....1 .....
74927A .....Piston, 4L60E 1-2 Accumulator (.230"OD Pin) 1992-Up.....1 8684429
S74927AK .....Piston & Sleeve Kit, 700R4/4L60E/4L65E 2-4 Accumulator (With Pin) 1982-Up (Sonnax).....1 .....
74927B .....Piston, 4L60E Forward Accumulator (1.770"0D, W/.230"OD Pin) 1992-Up (Plastic).....1 24200126
74927BA.....Piston, 4L60E Forward Accumulator (1.770"OD)(.230"OD Pin) 1992-Up (Aluminum) .....1 .....
74927BK.....Piston Set, 700R4/4L60E (1-2 & Forward Accumulator) 1992-Up (1 Aluminum Piston With .310"OD .....Pin & 1 Plastic With .230"OD Pin Hole) .....1 .....
S74532K.....Piston Seals, 700R4/4L60E For S74927BK (Sonnax).....1 .....
74927CA.....Piston, 4L65E 1-2 Accumulator (Aluminum No Legs) .230"OD Pin (Transgo).....1 .....
74927D .....Piston, 4L60E/4L65E/4L70E Forward Accumulator .....1 .....
74929.....Cover, 700R4 1-2 Accumulator 1982-91 .....1 8683543
74929B .....Cover, 4L60E 1-2 Accumulator (Cast # 8684428)(The 2 Bolt Holes That Are The Widest .....Apart Are 2 3/4" Apart) 1992-97 .....1 8686084
74929BA.....Cover, 4L60E 1-2 Accumulator (Cast # 24219937)(The 2 Bolt Holes That Are The Widest .....Apart Are 2 3/4" Apart) 2002-Up.....1 .....
74929C .....Cover, 4L60E (Colorado/Canyon) 1-2 Accumulator (The 2 Bolt Holes That Are The Widest .....Apart Are 4" Apart) 2004-Up.....1 .....
74931.....Spring, 700R4 in Auxiliary Valve Body (Brown) 1987-91 .....1 .....
74934A .....Cover, 700R4 Auxiliary Valve Body (3 Bolt) 1987-91 .....1 8676043
74935.....Accumulator Assembly, 700R4 3-4 1982-91 .....1 .....
74935B .....Accumulator Assembly, 4L60E 3-4 1992-Up.....1 24202004
74936.....Spring, 700R4/4L60E 3-4 Accumulator .....1 .....
74937 .....Piston, 700R4 1-2 & 3-4 Accumulator (Use 74927) .....1 .....
74938.....Pin, 700R4 3-4 Accumulator (.310"OD) 1982-Up (Also Fits 700R4 1-2 Accumulator .....(.310"OD) 1982-91).....1 8628273
74938B .....Pin, 4L60E 1-2 And Forward Accumulator (.230 "OD Pin) 1992-Up 1 8684426
74938BK.....Pin Kit, 4L60E Forward Accumulator (3 Pins W/Out Rings) 1992-Up (Superior).....1 .....
S74938X.....Pin Kit, 700R4/4L60E 3-4 Accumulator (Oversize) (4 Per Kit) (Sonnax) .....1 .....
S74938XK .....Reamer Kit, 700R4/4L60E 3-4 Accumulator (Oversize)(10 Pins & Reamer)(Sonnax)1982-Up.... 1-2.....
S74938XE .....Pin, 4L60E Forward Accumulator (Oversize) (4 Per Kit) (.250"OD)(Sonnax) .....1-2.....
S74938XEK....Reamer Kit, 4L60E Forward Accumulator (Oversize)(10 Pins & Reamer)(Sonnax).....1 .....
44958.....Yoke Tube, 700R4 (W/O-Ring) 1982-84 .....1 6261062
74958.....Yoke Tube, 700R4/4L60E 1985-Up.....1 8654063
74960.....Piston, 700R4/4L60E 3-4 Clutch 1982-93.....1 8642135
74960E .....Piston, 4L60E/4L65E 3-4 Clutch (W/Molded Rubber) 1994-Up.....1 24200290
74960EK.....Piston Set, 4L60E/4L65E (3-4, Forward & Overrun Clutch Molded) 1994-Up .....1 .....

© Whatever It Takes Transmission Parts. Inc.

PART #	HARDPARTS (Continued)	QTY.	REFERENCE #
74963	Piston Housing, 700R4/4L60E Forward Clutch	1	8654326
74964	Piston, 700R4/4L60E Forward Clutch 1982-93	1	8683513
74964A	Piston, 4L60E/4L65E Forward Clutch (W/Molded Rubber) 1994-Up	1	24205272
74966	Piston, 700R4 Reverse Input Clutch (Steel) 1982-86	1	8667841
74966A	Piston, 700R4/4L60E Reverse Input Clutch (Aluminum 3 Clutch) 1987-96	1	8663071
74966AA	Piston, 700R4/4L60E Reverse Input Clutch (Aluminum 4 Clutch) 1987-96	1	
74967	Piston, 700R4 Low Reverse Clutch (V-8) 1982-86	1	8642221
74967A	Piston, 700R4 Low/Reverse Clutch (V-6) 1982-91	1	8642222
74967B	Piston, 700R4 Low/Reverse Clutch (V-8) 1987-91	1	8685549
74967E	Piston, 4L60E Low/Reverse Clutch (4.3L & V-8) 1992-Up	1	
74967F	Piston, 4L60E Low/Reverse Clutch (All V-6 Except 4.3L) 1992-Up	1	
74969	Piston, 700R4/4L60E Overrun Clutch 1982-93	1	8642148
74969A	Piston, 4L60E/4L65E Overrun Clutch (W/Molded Rubber) 1994-Up	1	24205273
S74969-1K	Reinforcement Sleeve & Seal, 700R4/4L60E/4L65E/4L70E 1982-Up (Does Not Include The Overrun Piston)(Sonnax)	1	
S74969K	Reinforcement Kit, 700R4/4L60E Input Drum (Contains: #969 Piston, Seal & Reinforcement Sleeve) 1982-93 (Sonnax)(Must Be Used With Aluminum Forward Piston, Even If Used In A 1994-Up)	1	
S74969AK	Reinforcement Kit, 4L60E/4L65E/4L70E Input Drum (Contains: #969 Piston, Seal And Reinforcement Sleeve)(Sonnax) 1994-Up (Must Be Used With Bonded Forward Piston, Even If Used in 1982-93)	1	
74970	Release Spring, 700R4/4L60E 3-4 Clutch 1987-Up	5	8667424
74970K	Release Spring Set, 700R4/4L60E 3-4 Clutch (5 Per Set) 1987-Up	1	
74971	Retainer W/Springs, 700R4 4L60E 3-4 Clutch 1995	1	8685244
74971A	Retainer W/Springs, 4L60E 3-4 Clutch 1996-Up	1	
74971K	Spring Kit, 700R4/4L60E 3-4 Clutch (Transgo)	1	
74976	Retainer W/Springs, 700R4 4L60E Reverse Input Clutch	1	8647284
74977	Retainer W/Springs, 700R4/4L60E Low/Reverse Clutch	1	8642227
74979	Retainer W/Springs, 700R4 4L60E Forward Clutch 1982-93	1	8677876
74979B	Retainer W/Springs, 4L60E Forward Clutch 1994-Up	1	24206085
74981	Retainer, 700R4/4L60E 3-4 Clutch (5 Tab) (Tin)	1	8642171
74991-2	Spring, 700R4/4L60E Manual Detent Spring	1	
74991-3P	Rooster Comb With IMS Sensor, 4L60E/4L65E (Internal)(With 6 Prong Connector) 2009-13	1	
74991-4	Shaft, 700R4/4L60E Manual Lever (4 1/4” Long) 1982-Up	1	8642913
74991-5	Retainer, 700R4 Manual Shaft 1982-98	1	
74991A	Linkage Assembly, 700R4/4L60E Internal (4 1/4” Long Manual Shaft) 1982-98	1	
74991B	Linkage Assembly, 4L60E Internal (5” Long Manual Shaft) 1996-08 (With 2 Sets Of Threads)	1	
74991E-4	Shaft, 4L60E Manual Lever (All Units W/PRNDL Switch) 1996-97	1	
74991EA-4	Shaft, 4L60E Manual Lever (5” Long) 1996-Up	1	
74991P	Linkage Assembly, 4L60E/4L65E (Internal)(With IMS Switch)(5” Long Manual Shaft) 2009-13 (With 1 Set Of Threads)	1	
74992	Shift Lever, 700R4 External (Column Shift)	1	
74992B	Shift Lever, 700R4 External (Floor Shift)	1	
74992D	Shift Lever, 4L60E (Cast # 12571802) Has A Round Ball Tip (Used With Cable Bracket That Bolts To Pan)	1	
74992E	Shift Lever, 4L60E (Cast # 15717549) Has A Round Ball Tip (Used With Cable Bracket That Bolts To Pan)	1	
74992EA	Shift Lever, 4L60E (Cast # 1572165) Has A Tapered Tip (Used With Cable Bracket That Bolts To Case)	1	
74993L	Manual Valve Link, 700R4 (3 1/8” Long) 1982-91	1	8654113
74993LA	Manual Valve Link, 4L60E (2 1/8” Long) 1992-13	1	8680731
74994	Park Rod Actuator, 700R4/4L60E 1982-99	1	
74995	Park Pawl Assembly, 700R4/4L60E (Park Pawl & Spring)	1	
74996	Fitting, 700R4/4L60E Cooler Line (5/16”) 1982-95	2	8637742
74996B	Fitting, 4L60E Cooler Line (Push-In Type) 1996-08	2	24205102
T34996BA	Fitting, 4L60E Front Cooler Line (Screw In)(With Machine Threads) 1997-05 (For 3/8” Lines) (Gold Colored)(Teckpak)	1	
74996B-4	Clip, 4L60E Cooler Line Fitting (Metal)	2	
34996GA	Fitting, 4L60E/4L65E Front Cooler Line (Push-In Type)(Metric Thread To Case)(Aluminum) (.839” Long) 2009-Up	2	
T34996GA	Fitting, 4L60E/4L65E Front Cooler Line (Push In Type)(Metric Thread To Case)(Steel, Silver Colored) 2009-Up (Teckpak)	2	
74996R	Fitting, 4L60E Radiator To Cooler Line 1999-2007	1	
74997	Bracket, 700R4 Throttle Valve Linkage (For Cases W/3/8” Ball) (3/8” Ball is The Throttle Valve Exhaust Check Ball)	1	8673606
74997A	Bracket, 700R4 Throttle Valve Linkage (For Cases W/Out 3/8” Ball) (3/8” Ball is The Throttle Valve Exhaust Check Ball)	1	
74997-7	Wire Link, 700R4 Throttle Valve Cable	1	8642290

© Whatever It Takes Transmission Parts. Inc.

S74997-7	Wire Link, 700R4 Throttle Valve (Allows Adjustments) (Sonnax)	1		
74999	Auxiliary Tube, 700R4 Connects Auxiliary Valve Body To Stator L1987-91	1		8663615

© Whatever It Takes Transmission Parts. Inc.

Aluminum Case Powerglide

RWD 2 Speed

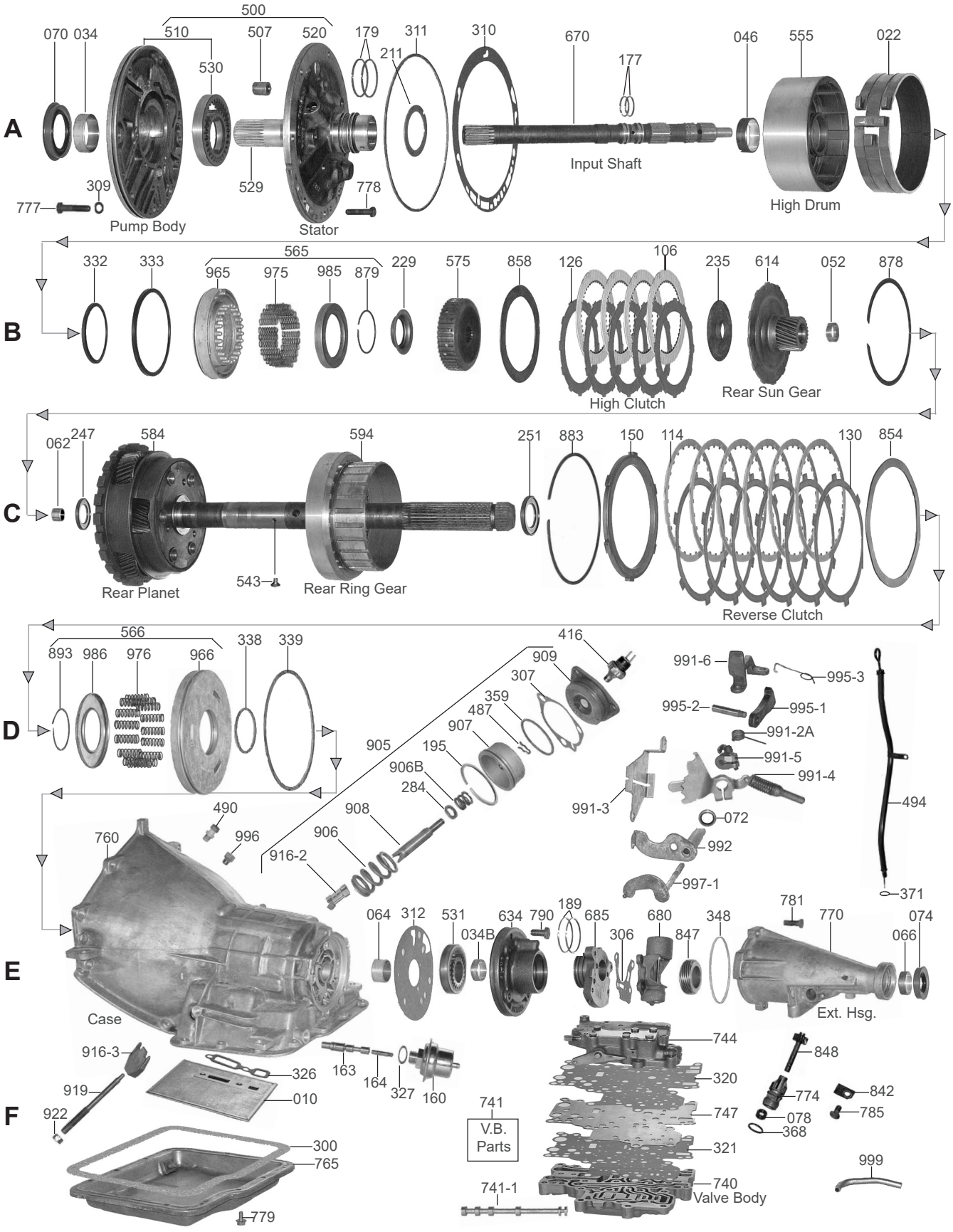

© Whatever It Takes Transmission Parts. Inc.

Aluminum Case Powerglide

PART #	PAPER & RUBBER KIT	QTY.	REFERENCE #
103000	Paper & Rubber Kit, Aluminum Powerglide 1962-73	1	

PART #	OVERHAUL KITS	QTY.	REFERENCE #
103002	Overhaul Kit, Aluminum Powerglide 1962-73	1	
103002FHP	Overhaul Kit, Aluminum Powerglide (With Teflon Rings) (TTK Maxx)	1	
103002R	Overhaul Kit, Aluminum Powerglide (Racing) 1962-73 (With Teflon Rings)(No Valve Body Gaskets)	1	

PART #	MASTER L/STEEL KIT	QTY.	REFERENCE #
103004	Master L/Steels Kit, Aluminum Powerglide 1962-73	1	
103004RS1	Master L/Steels Kit, Aluminum Powerglide (Stage 1) 1962-73 (No Valve Body Gaskets) (Raybestos Frictions)	1	

PART #	MASTER W/STEEL KIT	QTY.	REFERENCE #
103006	Master W/Steels Kit, Aluminum Powerglide 1962-73	1	

PART #	FILTER	QTY.	REFERENCE #
103010	Filter, Aluminum Powerglide 1962-73	1	6263005
103010A	Filter, Aluminum Powerglide (Larger, Square For Racing) 1962-73	1	

PART #	FILTER KIT	QTY.	REFERENCE #
103011A	Filter Kit, Aluminum Powerglide (Large, Square) 1962-73	1	

PART #	BANDS	QTY.	REFERENCE #
105022	Band, Aluminum Powerglide (1 7/8” Wide) 1962-73	1	
105022B	Band, Aluminum Powerglide (Hi-Performance) 1962-73	1	
105022H	Band, Aluminum Powerglide (Hi-Performance) Red Lining (1 7/8” Wide)	1	
S105022HA	Band, Aluminum Powerglide (Hi-Performance, Race Only) (Sonnax) 1962-73	1	
105022HB	Band, Aluminum Powerglide (Hi-Performance) Racing (2 1/4” Wide)	1	

PART #	BUSHINGS	QTY.	REFERENCE #
103030	Bushing Kit, Aluminum Powerglide 1962-73	1	
44034	Bushing, Aluminum Powerglide Front Pump Body 1962-73	1	8623940
103034B	Bushing, Aluminum Powerglide Governor Support Or Rear Pump 1962-73	1	3789877
103046	Bushing, Aluminum Powerglide High Clutch Drum (Babbit) 1962-73 (Can Use 54046A)	1	3840760
54046A	Bushing, Aluminum Powerglide High Clutch Drum (1.880”OD) 1962-73	1	
S103046A	Bushing, Aluminum Powerglide High Clutch Drum (Finish In Place) (Sonnax) 1962-73	1	
103052	Bushing, Aluminum Powerglide Sun Gear (W/Splines Inside) (Brass) 1962-73	1	
44062	Bushing, Aluminum Powerglide Output Shaft (Pilot) 1962-73	1	3789034
103064	Bushing, Aluminum Powerglide Case 1962-73	1	3789009
44066	Bushing, Aluminum Powerglide Extension Housing (1.500”ID)(Babbit) 1962-73	1	6260048
44066B	Bushing, Aluminum Powerglide Extension Housing (1.500”ID)(Bronze) 1962-73	1	

PART #	METAL CLAD SEALS	QTY.	REFERENCE #
44070	Seal, Aluminum Powerglide Front 1962-73	1	8670283
103072	Seal, Aluminum Powerglide Linkage 1962-73	1	3789137
44074	Seal, Aluminum Powerglide Rear (W/Flange, W/Out Boot) 1962-73	1	1243402
44074C	Seal, Aluminum Powerglide Rear (W/Flange, W/ Short Boot) 1962-73	1	
44078X	Seal, Aluminum Powerglide Speed-O Shaft	1	1240382

PART #	FRICTION CLUTCH	QTY.	REFERENCE #
103106	Friction, Aluminum Powerglide High Clutch (.098”) 1962-73	4	3779904
103106AHP	Friction, Aluminum Powerglide High Clutch (.062”) Hi-Performance 1962-73	AR	
103106AHPK	Friction Kit, Aluminum Powerglide High Clutch (.060”) Hi-Performance (8 Per Kit) 1962-73 (Alto)	1	
103106APPK	Friction & Steel Kit, Aluminum Powerglide High Clutch (.060”) Hi-Performance (9 Frictions & 9 Kolene Steels) 1962-73 (Alto)	1	
103106AAPPK	Friction & Steel Kit, Aluminum Powerglide (Front Clutch Power Pack)(Alto G3 Friction & Alto Performance Steels) 1962-73 (8 Frictions (.063”Thick) & 8 Steels (.073”Thick))	1	

© Whatever It Takes Transmission Parts. Inc.

PART #	FRICTION CLUTCH (Continued)	QTY.	REFERENCE #
103106AS	Friction, Aluminum Powerglide High Clutch (.060") (Stage 1) 1962-73	4	
103106HD	Friction, Aluminum Powerglide High Clutch (.098") Heavy Duty	4	
103106HP	Friction, Aluminum Powerglide High Clutch (.098") Hi-Performance 1962-73	4	
103106HPK	Friction Kit, Aluminum Powerglide High Clutch (.098") Hi-Performance (5 Per Kit) 1962-73 (Alto)	1	
103106S1	Friction, Aluminum Powerglide High Clutch (.098") (Stage 1) 1962-73	4	
44114	Friction, Aluminum Powerglide Reverse Clutch (.098") 1962-73	5	8641512
44114HP	Friction, Aluminum Powerglide Reverse Clutch (.098") (Hi-Performance) 1962-73	5	
44114HPK	Friction, Aluminum Powerglide Reverse Clutch (.098") (Hi-Performance) (5 Per Kit) 1962-73	1	
44114S1	Friction, Aluminum Powerglide Low/Reverse Clutch (.098") (Stage 1) 1962-73	5	
103119	Friction Module, Aluminum Powerglide 1962-73	1	
103119HP	Friction Module, Aluminum Powerglide (Hi- Performance) (Indy Reds) 1962-73	1	
103119S1	Friction Module, Aluminum Powerglide (Stage 1) 1962-73	1	

PART #	STEEL CLUTCH	QTY.	REFERENCE #
103126	Steel, Aluminum Powerglide High Clutch (.070")(Flat) 1962-73	3-5	1366440
103126B	Steel, Aluminum Powerglide High Clutch (.070") (Kolene) 1962-73	3-5	
103126BK	Steel Kit, Aluminum Powerglide High Clutch (.070:) (Kolene) (5 Per Kit) 1962-73	3-5	
103126BA	Steel, Aluminum Powerglide High Clutch (.070") (Kolene With Holes) 1962-73	3-5	
103126BBHP	Steel, Aluminum Powerglide High Clutch (.060") (Kolene With Holes) 1962-73	3-5	
103126BHPK	Steel Kit, Aluminum Powerglide High Clutch (.060") (Kolene) (8 Per Kit) 1962-73	1	
103130	Steel, Aluminum Powerglide Reverse Clutch (.070") 1962-73	4-6	3799210
103130B	Steel, Aluminum Powerglide Reverse Clutch (.070") (Kolene) 1962-73	4-6	
103139	Steel Module, Aluminum Powerglide 1962-73	1	

PART #	CLUTCH PRESSURE PLATES	QTY.	REFERENCE #
103150	Pressure Plate, Aluminum Powerglide Reverse Clutch 1962-73	1	
S103150A	Pressure Plate, Aluminum Powerglide Reverse Clutch (Sonnax)	1	

PART #	MODULATORS	QTY	REFERENCE #
103160	Modulator, Aluminum Powerglide (Adjustable) 1962-73	1	5638205
103160-3	Spring, Aluminum Powerglide Between Modulator & Valve	1	
S103160-6K	Plug Kit, Aluminum Powerglide Modulator Plug & Gasket (Sonnax)	1	
103163	Valve, Aluminum Powerglide (Under Modulator Pin) 1962-73	1	
103164	Pin, Aluminum Powerglide (Under Modulator) 1962-73	1	

PART #	VALVE BODY KITS	QTY.	REFERENCE #
T103171	Reprogramming Kit, Aluminum Powerglide (Full Race) (Automatic Or Manual Shift) (Transgo)	1	PG-2S

PART #	OIL SEALING RINGS	QTY.	REFERENCE #
103175	Ring Kit, Aluminum Powerglide 1962-73	1	
103175T	Ring Kit, Aluminum Powerglide 1962-73 (Teflon)	1	
103175BT	Ring Kit, Aluminum Powerglide (Oversized) Teflon	1	
103177	Ring, Aluminum Powerglide Input Shaft 1962-73	2	3817715
103179	Ring, Aluminum Powerglide HI-Clutch 1962-73 (Also Fits Governor Support)	4	3689808
103189	Ring, Aluminum Powerglide Governor Support 1962-73 (Use 103179)	2	
103195	Ring, Aluminum Powerglide Low Servo	1	3789084

PART #	WASHERS & BEARINGS	QTY.	REFERENCE #
S103211	Washer, Aluminum Powerglide Stator To High Drum (.061") 1962-73 (Sonnax)	1	
103211A	Washer, Aluminum Powerglide Stator To High Drum (.078") 1962-73	1	
S103211A	Washer, Aluminum Powerglide Stator To High Drum (.078") 1962-73 (Sonnax)	1	
103211B	Washer, Aluminum Powerglide Stator To High Drum (.092") 1962-73	1	
103211C	Washer, Aluminum Powerglide Stator To High Drum (.106") 1962-73	1	
103229	Cup Race, Aluminum Powerglide High Clutch Drum To Hub 1962-73	1	
103235	Washer, Aluminum Powerglide High Clutch Hub To Rear Sun Gear 1962-73	1	
103247	Washer, Aluminum Powerglide Sun Gear To Planet (Bronze) 1962-73	1	
S103247	Washer, Aluminum Powerglide Sun Gear To Planet (Bronze) 1962-73 (Sonnax)	1	
103247A	Bearing, Aluminum Powerglide Sun Gear To Planet 1962-73	1	
S103247A	Bearing, Aluminum Powerglide Sun Gear To Planet 1962-73 (Sonnax)	1	
103251	Bearing, Aluminum Powerglide Planet To Case 1962-73	1	
S103251	Bearing, Aluminum Powerglide Planet To Case 1962-73 (Sonnax)	1	

© Whatever It Takes Transmission Parts. Inc.

103284	Washer, Aluminum Powerglide Servo 1962-73	1	

PART #	GASKETS & RUBBER COMPONENTS	QTY.	REFERENCE #
103300	Gasket, Aluminum Powerglide Pan 1962-73	1	3789148
103306	Gasket, Aluminum Powerglide Governor Cover	1	
103307	Gasket, Aluminum Powerglide Low Servo	1	3789086
S103307AK	Seal Kit, Aluminum Powerglide “Super Holds Servo Assembly” (10 Pieces)(4 O-Rings, 4 Rings, Cover Gasket & O-Ring)(Sonnax)	1	
44309	Gasket, Aluminum Powerglide Pump Bolt	7	
103310	Gasket, Aluminum Powerglide Front Pump	1	3789022
103311	O-Ring, Aluminum Powerglide Front Pump	1	
103320B	Gasket, Aluminum Powerglide Upper Valve Body 1967-73 (Also Fits Lower Valve Body 1967-73)	1	
103326	Gasket, Aluminum Powerglide Filter	1	3795990
103327	Gasket, Aluminum Powerglide Modulator	1	6257218
103332	Lip Seal, Aluminum Powerglide High Drum (Inner) (3.06”OD)	1	
103332A	Lip Seal, Aluminum Powerglide High Drum (Inner) (2.50”OD) 1962 Only	1	
103333	Lip Seal, Aluminum Powerglide High Drum (Outer)	1	
44338	Lip Seal, Aluminum Powerglide Reverse Piston (Inner)	1	
44339	Lip Seal, Aluminum Powerglide Reverse Piston (Outer)	1	
103348	O-Ring, Aluminum Powerglide Extension Housing To Case	1	
103359	O-Ring, Aluminum Powerglide Low Servo	1	
S103359	O-Ring, Aluminum Powerglide Servo (Viton) (Sonnax)	1	
S103359A	O-Ring, Aluminum Powerglide Servo (Teflon) (Sonnax)	1	
103368	O-Ring, Aluminum Powerglide Speed-O Sleeve	2	10054241
44371A	O-Ring, Aluminum Powerglide Filler Tube	1	6264902

PART #	ELECTRICAL COMPONENTS	QTY.	REFERENCE #
44416Y	Switch, Aluminum Powerglide Spark Comtrol (3 Prong)	1	3996287

PART #	HARD PARTS	QTY.	REFERENCE #
103500	Pump, Aluminum Powerglide (Complete)	1	
103510	Pump Body, Aluminum Powerglide (With Gears)	1	
103520	Stator, Aluminum Powerglide (Pump Cover)	1	
103529	Stator Tube, Aluminum Powerglide	1	
103530	Pump Gear Set, Aluminum Powerglide (.560” Thick)(3.717”OD Outer Gear)	1	
103530X	Pump Gear Set, Aluminum Powerglide (.560” Thick)(3.750”OD Outer Gear)(Oversized)	1	
103531	Pump Gear Set, Aluminum Powerglide Rear Pump	1	
103543	Flange Pin, Aluminum Powerglide Rear Pump Drive Gear Flange Pin	1	
103544	Plate, Aluminum Powerglide Rear Pump	1	
103544A	Pump Plate, Aluminum Powerglide Rear Pump Body To Case 1962-66	0	
103555	Drum, Aluminum Powerglide High Clutch (4 Or 5 Clutch)	1	
S103555B	Drum, Aluminum Powerglide High Clutch (10 Clutch)(High Performance)(Sonnax)	1	
S103555BK	Drum Kit, Aluminum Powerglide High Clutch (10 Clutch)(Complete With Clutch)(High Performance) (Sonnax)	1	
S103555BA	Drum W/Bearing, Aluminum Powerglide High Clutch (10 Clutch)(High Performance)(Sonnax)	1	
S103555BAK	Drum Kit W/Bearing, Aluminum Powerglide High Clutch (10 Clutch)(Complete With Clutch) (High Performance)(Sonnax)	1	
103565	Piston Kit, Aluminum Powerglide High Clutch (4 Clutch)	1	
103565A	Piston Kit, Aluminum Powerglide High Clutch (5 Clutch)	1	
103566	Piston Kit, Aluminum Powerglide Reverse Clutch (0.875” Thick Piston)	1	
103566A	Piston Kit, Aluminum Powerglide Reverse Clutch (1.075” Thick Piston)	1	
103566B	Piston Kit, Aluminum Powerglide Reverse Clutch (.815” Thick Piston)	1	
103566C	Piston Kit, Aluminum Powerglide Reverse Clutch (.630” Thick Piston)	1	
103575	Hub, Aluminum Powerglide High Clutch (4 Clutch) (15/16” Tall)	1	
S103575A	Hub, Aluminum Powerglide High Clutch (5 Clutch) Carbon Steel (Sonnax) (Light Weight With Holes For Drag Racing)	1	
S103575AA	Hub, Aluminum Powerglide High Clutch (5 Clutch) Carbon Steel (Sonnax) (No Holes For Drag Racing)	1	
S103575B	Hub, Aluminum Powerglide High Clutch (10 Clutch)(Carbon Steel)(Sonnax)(Light Weight With Holes For Drag Racing)	1	
103584AK	Planet Kit, Aluminum Powerglide (1.82 Ratio) 23 Teeth Sun Gear (Contains: Sun Gear, Ring Gear & Planet)	1	
103584AHPK	Kit, Aluminum POwerglide Planet (1.80 Ratio)(Straight Cut Gears)(Contains: Rear Sun Gear, Planet, Rear Ring Gear)(Regular Length)	1	
103584AAHPK	Kit, Aluminum Powerglide Planet “Shorty” (1.80 Ratio)(Straight Cut Gears)(Contains: Rear Sun Gear, Planet, Rear Ring Gear)		
103584BK	Planet Kit, Aluminum Powerglide (1.76 Ratio)(With 26 Teeth Sun Gear Ring Gear & Planet) (27 Splines)(17 1/2” Overall Length)	1	

© Whatever It Takes Transmission Parts. Inc.

PART #	PLANETARY COMPONENTS	QTY	REFERENCE #
S103584DHPK	Kit, Aluminum Powerglide Planet (1.58 Ratio)(Straigh Cut Gears)(Contains: Rear Sun Gear, Planet, Rear Ring Gear, Reverse Clutch Kit With Piston)(Standard Length)(Sonnax)	1	
S103584A-1	Washer, Aluminum Powerglide (1.82 Planet Pinion) Front (Sonnax)	3	8415A
S103584A-1K	Washer Kit, Aluminum Powerglide (1.82 Planet Pinion) Front (Sonnax)	1	8415AK
S103584A-2K	Planet Gear Set, Aluminum Powerglide (1.80 Ratio, Straight Cut Gears)(Contains: Planet Gears, Sun Gear & Ring Gear)(Sonnax) (Only Fits The 1.76 Ratio Housing)	1	
S103584A-8K	Ring Gear Stabilizer Kit, Aluminum Powerglide (Contains Ring Gear Stabilizer Race & 5 Bearing Buttons) (Sonnax)	1	
S103584AHP	Planetary Carrier Assy W/Input Shaft, Aluminum Powerglide (1.80 Ratio)(OE Length Shaft)(Contender Series) (Sonnax)	1	
S103584AAHP	Planetary Carrier Assy W/Input Shaft, Aluminum Powerglide (1.80 Ratio)(Short Length Shaft)(Contender Series)(Sonnax)	1	
S103584B-1	Washer, Aluminum Powerglide (1.76 Planet Pinion) Front (Sonnax)	3	8415
S103584B-1K	Washer Kit, Aluminum Powerglide (1.76 Planet) Front (Sonnax)	1	8415BK
S103584B-3K	Pin Kit, Aluminum Powerglide (1.76 Planet) Contains: Pins, Washers, Bolts (6 Each)(Sonnax)	1	28435K
S103584B-4K	Needle Bearing Kit, Aluminum Powerglide (1.76 Planet Pinion) (Sonnax)	1	28423
S103584B-7K	Planet Rebuild Kit, Aluminum Powerglide (1.76 Ratio)(Contains: Pins, Needles, Washers, Spacers & Bolts)(Sonnax)	1	
S103584B-8K	Spacer Kit, Aluminum Powerglide Pinion Bearing Spacers (3 Thick & 12 Thin Spacers)(Sonnax)	1	K28414
S103584BA-1	Washer, Aluminum Powerglide (1.76 Planet Pinion) Rear (Sonnax)	6	8415B

PART #	HARD PARTS (Continued)	QTY.	REFERENCE #
103594A	Ring Gear, Aluminum Powerglide Rear (1.82 Ratio)	1	
103594B	Ring Gear, Aluminum Powerglide Rear (1.76 Ratio)	1	
103614A	Sun Gear W/Hub, Aluminum Powerglide Rear (23 Teeth) (1.82 Ratio)	1	
103614B	Sun Gear W/Hub, Aluminum Powerglide Rear (26 Teeth) (1.76 Ratio)	1	
103634	Rear Pump/Support, Aluminum Powerglide (With Gears) 1962-66	1	
103634A	Support, Aluminum Powerglide Output Shaft (5"OD) Cast Iron	1	
103670	Shaft, Aluminum Powerglide Input (12 5/8" Long)(For 1.82 Ratio)	1	
103670A	Shaft, Aluminum Powerglide Input (12 7/8" Long)(For 1.76 Ratio)	1	
103670BHP	Shaft, Aluminum Powerglide Input (OE Splines)(12 13/16"Long)(Rated To 850 HP)(Has No Letter On Converter End) 1.76 Or 1.82 Ratio	1	
S103670C	Shaft, Aluminum Powerglide Input (30 Teeth Turbo Splines)(Sonnax)	1	
103680	Governor, Aluminum Powerglide	1	
103685A	Support, Aluminum Powerglide Governor	1	
103740	Valve Body, Aluminum Powerglide (Has Round Hole In Top Plate)	1	
103740A	Valve Body, Aluminum Powerglide (Has Square Hole In Top Plate)	1	
103741-1	Valve, Aluminum Powerglide Manual	1	
S103741-1A	Manual Valve, Alum Powerglide (Sonnax)	1	
S103741D	Detent Lever, Aluminum Powerglide (Sonnax)	1	
S103741TK	Boost Valve & Sleeve Assembly, Aluminum Powerglide (Sonnax)	1	
103744	Auxillary Valve Body, Aluminum Powerglide	1	
103747	Plate, Aluminum Powerglide Valve Body	1	
103760B	Case, Aluminum Powerglide (Cheverolet Water Cooled) No Rear Pump	1	
103765	Pan, Aluminum Powerglide With Drain Plug On The Side	1	
103765HP	Pan, Aluminum Powerglide (Deep)(Aluminum With Spacer & Bolts)(Hi-Performance)	1	
S103765K	Pan Kit, Aluminum Powerglide (Includes: Aluminum Pan, 1/2" NPT Male To 1/8" NPT Female Reducing Bushing, 1/2"-20 Magnetic Drain Plug, 1/8" NPT Socket Pipe Plug, Nylon Sealing Washer)(Note: A Special Pick-Up Extension Must Be Used To Properly Position The Oil Filter #S103789K)(Must Use S103789K)	1	
S103789K	Extension Kit, Powerglide (GM) Filter To Valve Body (Sonnax)(Used With S103765K To Insure Proper Placement Of Filter)(Contains: Filter Extension, 2 Gaskets, Extension Screws, Pan Screws, & Lock Washers)	1	
103770A	Extension Housing, Aluminum Powerglide (9" Long)	1	
103770B	Extension Housing, Aluminum Powerglide (11 3/8" Long)	1	
44774	Speed-O-Housing, Aluminum Powerglide (7/8" Steel, Uses Metal Clad Seal)	1	
103774	Speed-O Housing, Aluminum Powerglide (No Seal Type)	1	
44774A	Speed-O-Housing, Aluminum Powerglide (7/8" Aluminum, Uses Rubber Seal)	1	
103777K	Bolt Set, Aluminum Powerglide Pump To Case (8 Pieces)	1	
103778K	Bolt Set, Aluminum Powerglide Stator To Pump Body	1	
103779K	Bolt Set, Aluminum Powerglide Rear Pump To Case & Pan To Case	1	
103781K	Bolt Set, Aluminum Powerglide Extension Housing To Case	1	
103782K	Bolt Set, Aluminum Powerglide Valve Body To Case (7 Pieces)	1	
103785	Bolt, Aluminum Powerglide Speed-o Sleeve Bracket	1	
103787	Bolt, Aluminum Powerglide Holds Governor Support To Output Shaft	1	

© Whatever It Takes Transmission Parts. Inc.

44793K	Bolt Set, Aluminum Poweglide Filter To Valve Body (2 Pieces)	1
103842	Bracket, Aluminum Powerglide Speed-O Sleeve	1
103847	Gear, Aluminum Powerglide Speed-O Drive	1
103848	Gear, Aluminum Powerglide Speed-O Driven	1
103854	Wave Plate, Aluminum Powerglide Reverse Clutch	1
103878	Snap Ring, Aluminum Powerglide Holds Rear Sun Gear In High Drum	1
103879	Snap Ring, Aluminum Powerglide High Clutch	1
103883	Snap Ring, Aluminum Powerglide Reverse Clutch	1
103893	Snap Ring, Aluminum Powerglide Reverse Piston	1
103905	Servo Assembly, Aluminum Powerglide	1
S103905HDK	Servo Assy, Alum PG Pin & Cover Kit (Sonnax) (Includes Supported Servo Pin, Supported Servo Cover, Shims (2), Retaining Clip, Gasket, Pin O-Ring, Cover O-Ring, Plug & Bolts (3))	1
S103905HP	Servo Assembly, Aluminum Powerglide “Super Hold) (Sonnax)	1
S103905K	Servo Assembly, Aluminum Powerglide (Smart-Tech Ratio-Style)(Includes Servo Assembly, Cover Gasket, Case-Too-Cover O-Ring Servo Pin Seals(2), Primary Piston Seals(2), Return Spring, Cover Bolts(3))(Sonnax)	1
103906	Spring, Aluminum Powerglide Servo (Large)	1
S103906AHDK	Spring Kit, Alum PG Servo (Large) (Sonnax) (Includes Spring & Shims (2))	1
103906B	Spring, Aluminum Powerglide Servo (Small)	1
103907	Piston, Aluminum Powerglide Servo	1
S103907AHPK	Piston Kit, Aluminum Powerglide Servo (Hi-Performance) Dual Teflon Ring Piston, Rings & Gasket (Sonnax)	1
S103907BHPK	Servo Assembly, Aluminum Powerglide (Hi-Performance) Dual Teflon Ring Piston, Rings, Gasket & Cover (Purple Anodized)(Sonnax)	1
S103907CHPK	Servo Assembly, Aluminum Powerglide (Hi-Performance) Dual Teflon Ring Piston, Rings, Gasket & Cover (Non Anodized) (Sonnax)	1
S103907HPK	Piston Kit, Aluminum Powerglide Servo (Hi-Performance) Dual Viton Ring Piston, Rings & Gasket (Sonnax)	1
S103907JHPK	Servo Assembly, Aluminum Powerglide (Hi-Performance) Dual Viton Ring Piston, Rings, Gasket & Cover (Purple Anodized) (Sonnax)	1
S103907LHPK	Servo Assembly, Aluminum Powerglide (Hi-Performance) Dual Viton Ring Piston, Rings, Gasket & Cover (Non-Anodized) (Sonnax)	1
103908	Pin, Aluminum Powerglide Servo	1
103909	Cover, Aluminum Powerglide Servo	1
S103909K	Servo Cover Kit, Aluminum Powerglide (Cover, Gasket & O-Ring) (Sonnax)	1
103916-2	Strut, Aluminum Powerglide Band (Servo Side)	1
103916-3	Strut, Aluminum Powerglide Band (Adjustment Side) (Wedge)	1
103919	Band Adjuster Screw, Aluminum Powerglide	1
103965	Piston, Aluminum Powerglide High Clutch	1
S103965HP	Piston, Aluminum Powerglide High Clutch (10 Clutch)(Sonnax)(Modified For Use In The S103555B & S103555BA High Clutch Drums From Sonnax)	1
103966	Piston, Aluminum Powerglide Reverse Clutch (.875” Thick)	1
103966A	Piston, Aluminum Powerglide Reverse Clutch (1.075” Thick)	1
103966B	Piston, Aluminum Powerglide Reverse Clutch (.815” Thick)	1
103966C	Piston, Aluminum Powerglide Reverse Clutch (.630” Thick)	1
103966D	Piston, Aluminum Powerglide Reverse Clutch (.460” Thick)(Sonnax)	1
103975	Spring Set, Aluminum Powerglide High Clutch Return (24 Springs)	1
S103976K	Spring Kit, Aluminum Powerglide Reverse Clutch Return (17 Per Kit) (Sonnax)	1
103976	Spring Set, Aluminum Powerglide Reverse Clutch Return (17 Springs)	1
103985	Retainer, Aluminum Powerglide High Clutch	1
S103986	Retainer, Aluminum Powerglide Reverse Clutch Spring (Sonnax)	1
103991-3	Bracket, Aluminum Powerglide Rooster Comb (Internal)	1
103991-4	Rooster Comb, Aluminum Powerglide With Park Rod	1
103991-5	TV Linkage, Aluminum Powerglide (Internal)	1
103991-6	Bracket, Aluminum Powerglide Rod (2 Bolt)	1
S103992	Shift Lever, Aluminum Powerglide (Floor Shift) (Sonnax)	1
34992	Shift Lever, Aluminum Powerglide External (Column Shift)	1
S103992-1	Shift Lever, ALuminum Powerglide (Anti-Leak)(Sonnax)	1
S103992A	Shift Lever, Aluminum Powerglide (Bolt Together 4 Hole) (Sonnax)	1
103992B	Shift Lever, Aluminum Powerglide (Column Shift) (Welded)	1
103995-1	Park Pawl, Aluminum Powerglide	1
103995-2	Pin, Aluminum Powerglide Park Pawl Pivot	1
103995-3	Spring, Aluminum Powerglide Park Pawl Return	1
S103995-4A	C-Clip, Alum Powerglide Park Pawl (Fits 5/16” Dia Shafts) (5 Per Pack)(Sonnax)	1
103996	Fitting, Aluminum Powerglide Cooler Line	1
103997-1	TV Lever, Aluminum Powerglide (External) (Welded Type)	1
103997A-1	TV Lever, Aluminum Powerglide (External) (Bolt Together Type) (2 Pieces)	1
103999	Oil Tube, Aluminum Powerglide Valve Body To Case	1

© Whatever It Takes Transmission Parts. Inc.

PART #	PAPER & RUBBER KIT	QTY.	REFERENCE #
108000	Paper & Rubber Kit, Cast Iron Powerglide 1958-62	1	
108000C	Paper & Rubber Kit, Cast Iron Powerglide 1955-57	1	
108000E	Paper & Rubber Kit, Cast Iron Powerglide 1953-54	1	
108000G	Paper & Rubber Kit, Cast Iron Powerglide 1950-52	1	

PART #	OVERHAUL KITS	QTY.	REFERENCE #
108002	Overhaul Kit, Cast Iron Powerglide 1955-62	1	
108002C	Overhaul Kit, Cast Iron Powerglide 1955-57	1	
108002E	Overhaul Kit, Cast Iron Powerglide 1953-54	1	
108002G	Overhaul Kit, Cast Iron Powerglide 1950-52	1	

PART #	MASTER L/STEEL KIT	QTY.	REFERENCE #
108004	Master L/Steels Kit, Cast Iron Powerglide 1958-62	1	
108004C	Master L/Steels Kit, Cast Iron Powerglide 1955-57	1	
108004E	Master L/Steels Kit, Cast Iron Powerglide 1953-54	1	
108004G	Master L/Steels Kit, Cast Iron Powerglide 1950-52	1	

PART #	MASTER W/STEEL KIT	QTY.	REFERENCE #
108006	Master W/Steels Kit, Cast Iron Powerglide 1958-62	1	
108006C	Master W/Steels Kit, Cast Iron Powerglide 1955-57	1	
108006E	Master W/Steels Kit, Cast Iron Powerglide 1953-54	1	
108006G	Master W/Steels Kit, Cast Iron Powerglide 1950-52	1	

PART #	BANDS	QTY.	REFERENCE #
108022	Band, Cast Iron Powerglide Low & Reverse (Front & Rear) 1950-62	2	5459350
108022A	Band, Cast Iron Powerglide Low (Front, Some) (Double Wrap) 1955-62	1	3883918

PART #	BUSHINGS	QTY.	REFERENCE #
108030	Bushing Kit, Cast Iron Powerglide 1953-62	1	
44066	Bushing, Cast Iron Powerglide Extension Housing (1.500"ID)(Babbit)	1	
44066B	Bushing, Cast Iron Powerglide Extension Housing (1.500"ID)(Bronze)		

PART #	METAL CLAD SEALS	QTY.	REFERENCE #
108070	Seal, Cast Iron Powerglide Front Pump 1950-52	1	
44070	Seal, Cast Iron Powerglide Front Pump 1953-63	1	
44074	Seal, Cast Iron Powerglide Extension Housing 1955-62	1	

PART #	FRICTION CLUTCH	QTY.	REFERENCE #
103106	Friction, Cast Iron Powerglide High Clutch .098" 1961-62	2-4	3779904
103106A	Friction, Cast Iron Powerglide High Clutch .060" 1961-62	2-4	3779904
108106	Friction, Cast Iron Poweglide High Clutch (Lug Type) 1950-55	4	3713694
108106A	Friction, Cast Iron Powerglide High Clutch (Flat) 1956-60	4	3748703
103106AHPK	Friction Kit, Cast Iron Powerglide High Clutch (.060") Hi-Performance (8 Per Kit) 1961-62	1	
103106APPK	Friction & Steel Kit, Cast Iron Powerglide High Clutch (.060") Hi-Performance (9 Frictions & 9- .060" Kolene Steels) 1961-62	1	
103106HP	Friction, Cast Iron Powerglide High Clutch (.098") Hi-Performance 1961-62	2-4	
103106HPK	Friction Kit, Cast Iron Powerglide High Clutch (.098") Hi-Performance (5 Per Kit) 1961-62	1	
103106S1	Friction, Cast Iron Powerglide High Clutch (.098"OD)(Stage 1) 1961-62	5	
108119	Friction Module, Cast Iron Powerglide 1955-62	1	

PART #	STEEL CLUTCH	QTY.	REFERENCE #
103126	Steel, Cast Iron powerglide High Clutch .070" 1961-62	5	3779903
103126B	Steel, Cast Iron Powerglide High Clutch .070" (Kolene) 1961-62	5	
108126	Steel, Cast Iron Powerglide High Clutch .070" (6 Teeth) (Flat) 1950-55	5	3703210
108126A	Steel, Cast Iron Powerglide High Clutch .090" (6 Teeth) (Flat) 1957	2	3742398
108126B	Steel, Cast Iron Powerglide High Clutch .070" (6 Teeth) (Waved) 1956-61	5	3764461
108139	Steel Module, Cast Iron Powerglide 1958-62	1	

© Whatever It Takes Transmission Parts. Inc.

PART #	MODULATORS	QTY	REFERENCE #
108160	Modulator, Cast Iron Powerglide (Flat Diaphragm) 1950-54	1	3709049
108160A	Modulator, Cast Iron Powerglide (Round Diaphragm) 1958-62	1	3745169

PART #	OIL SEALING RINGS	QTY.	REFERENCE #
108175B	Ring Kit, Cast Iron Powerglide 1955-62	1	
103177	Ring, Cast Iron Powerglide Input Shaft 1950-62	1	

© Whatever It Takes Transmission Parts. Inc.

PART #	PAPER & RUBBER KIT	QTY.	REFERENCE #
105000	Paper & Rubber Kit, ST300 1964-69	1	

PART #	OVERHAUL KIT	QTY.	REFERENCE #
105002	Overhaul Kit, ST300 1964-69	1	

PART #	MASTER L/STEEL KIT	QTY.	REFERENCE #
105004	Master L/Steel Kit, ST300 1964-69	1	

PART #	MASTER W/STEEL KIT	QTY.	REFERENCE #
105006	Master W/Steel Kit, ST300 1964-69	1	

PART #	FILTER	QTY.	REFERENCE #
105010	Filter, ST300 1964-69	1	1374649

PART #	FILTER KIT	QTY.	REFERENCE #
105011	Filter Kit, ST300 1964-69	1	

PART #	BANDS	QTY.	REFERENCE #
105022	Band, ST300 (1 7/8” Wide) 1964-69	1	3883918
105022B	Band, ST300 (Hi-Performance) High Pressure Lining	1	
105022H	Band, ST300 (Hi-Performance) Red Lining (1 7/8” Wide)	1	
105022HB	Band, ST300 (Hi-Performance) Racing (2 1/4” Wide)	1	

PART #	BUSHINGS	QTY.	REFERENCE #
105030	Bushing Kit, ST300 1964-69	1	
44034	Bushing, ST300 Pump Body 1964-69	1	8623940
44036	Bushing, ST300 Stator (Front)(Also Low Sun Gear) 1964-69	2	1381366
103046	Bushing, ST300 High Clutch Drum 1964-69	1	3840760
44062	Bushing, ST300 Output Shaft (Front)(Pilot) 1964-69	1	3789034
105064	Bushing, ST300 Case 1964-69	1	1367730
44066	Bushing, ST300 Extension Housing (1.500”ID)(Babbitt) 1964-69	1	6260048
44066B	Bushing, ST300 Extension Housing (1.500”ID)(Babbitt) 1964-69	1	

PART #	METAL CLAD SEALS	QTY.	REFERENCE #
44070	Seal, ST300 Front 1964-69	1	8641826
44072	Seal, ST300 Linkage Shaft 1964-69	1	8623056
44074	Seal, ST300 Rear (W/Flange, W/O Boot) 1964-69	1	1243402
44074C	Seal, ST300 Rear (W/Flange, W/Short Boot) 1964-69		

PART #	FRICTION CLUTCH	QTY.	REFERENCE #
103106	Friction, ST300 High Clutch .098” 1964-69	5	3779904
103106AHP	Friction, ST300 High Clutch .062” (High Performance) 1964-69	5	
103106AHPK	Friction Kit, ST300 High Clutch .060” (High Performance) 1964-69	1	
103106APPK	Friction And Steel Kit, ST300 High Clutch .060” (High Performance) 1964-69	1	
106106HPK	Friction Kit, ST300 High Clutch .098” (Hi-Performance) (5 Per Kit) 1964-69	1	
103106S1	Friction, ST300 High Clutch (.098”)(Stage 1) 1964-69	5	
44114	Friction, ST300 Reverse Clutch .070” 1964-69	6	8641512
44114HP	Friction, ST300 Reverse Clutch .098” (Hi-Performance) 1964-69	5	
44114HPK	Friction Kit, ST300 Reverse Clutch .098” (Hi-Performance) (5 Per Kit) 1964-69	1	
44114S1	Friction, ST300 Low/Reverse Clutch (.098”) (Stage 1) 1964-69	5-6	
103119HP	Friction Module, ST300 (Hi-Performance) (Indy Reds) 1964-69	1	
105119	Friction Module, ST300 1964-69	1	

PART #	STEEL CLUTCH	QTY.	REFERENCE #
103126	Steel, ST300 High Clutch .070” 1964-69	5	1366440
103126B	Steel, ST300 High Clutch .070” (Kolene) 1964-69	5	
103130	Steel, ST300 Reverse Clutch .070” 1964-69	6	3799210
103130B	Steel, ST300 Reverse Clutch .070” (Kolene) 1964-69	6	

© Whatever It Takes Transmission Parts. Inc.

105139	Steel Module, ST300 1964-69	1	

PART #	OIL SEALING RINGS	QTY.	REFERENCE #
105175	Ring Kit, ST300 1964-69	1	
22177	Ring, ST300 Input Shaft 1.125”OD (Metal) 1964-69	2-3	1942041
103179	Ring, ST300 High Drum (Metal) 1964-69	2	3689808
105199	Ring, ST300 Low Servo Piston (Metal) 1964-69	1	1372058

PART #	WASHERS & BEARINGS	QTY.	REFERENCE #
105211	Washer, ST300 Pump to Drum .061” 1964-69	1	1356904
105211A	Washer, ST300 Pump to Drum .079” 1964-69	1	1356905
105211B	Washer, ST300 Pump to Drum .097” 1964-69	1	1356906
105235	Washer, ST300 Drum to Hub 1964-66	1	1362027
105235A	Washer, ST300 Drum to Hub 1967-69	1	1377665
103241	Washer, ST300 Hub to Sun Gear 1964-69	1	3783286
103250	Bearing, ST300 Sun Gear to Planet 1964-69	1	3818528
105253	Race, ST300 Planet to Case (Front) 1964-69	1	1366680
105254	Bearing, ST300 Planet to Case 1964-69	1	1194558
105255	Race, ST300 Planet to Case (Rear) 1964-69	1	1366679

PART #	GASKETS & RUBBER COMPONENTS	QTY.	REFERENCE #
105300	Gasket, ST300 Bottom Pan 1964-69	1	1376720
105306	Gasket, ST300 Governor Cover 1964-69	1	1359113
105310	Gasket, ST300 Pump 1964-69	1	1374598
105334	Lip Seal, ST300 High Clutch (Inner) 1964-69	1	
105370	O-Ring, ST300 Filler Tube 1964-69	1	

PART #	ELECTRICAL COMPONENTS	QTY.	REFERENCE #
105414	Switch, ST300 Spark Control (On Valve Body) 1964-65	1	1943623
105414A	Switch, ST300 Spark Control (On Front Pump) 1964-69	1	1993390
105434	Solenoid, ST300 Kickdown (W/O Cruise Control) 1964-69	1	1993330
105434A	Solenoid, ST300 Kickdown (W/Cruise Control) 1964-69	1	1993374
34444A	Connector, ST300 Case (1 Prong) 1964-69	1	24205373
34444B	Connector, ST300 Case (2 Prong) 1964-67	1	

PART #	HARD PARTS	QTY.	REFERENCE #
105500	Pump Assembly, ST300 Complete (Non-Variable Pitch) 1964-69	1	
105500A	Pump Assembly, ST300 Complete (W/Variable Pitch) 1964-65	1	
105500B	Pump Assembly, ST300 Complete (W/Variable Pitch) 1966-67	1	
105520A	Stator, ST300 (Non Variable Pitch) 1964-69	1	
105520B	Stator, ST300 (With Variable Pitch) 1964-67	1	
105530	Pump Gear Set, ST300 (.625” Thick)(All Except Cast #123000 On Pump Body) 1964-69	1	
44530AB	Pump Gear Set, ST300 (.725” Thick)(With Cast # 123000 On Pump Body) 1964-69	1	
105555	Drum, ST300 High Clutch (2.600” Tall)(5.865”OD)(3.060”OD Of The Neck Where Inner Piston O-Ring Rides) 1964-69	1	1361823
105565	Piston Kit, ST300 High Clutch Drum 1964-69	1	
105566	Piston Kit, ST300 Reverse Clutch 1964-69	1	
105575	Hub, ST300 High Clutch 1964-69	1	1380015
105584	Planet, ST300 W/14 3/4” Output Shaft 1964-69	1	1380232
105584A	Planet, ST300 W/20” Output Shaft 1964-69	1	1380229
105594	Ring Gear, ST300 Planet 1964-69	1	1364348
105614	Sun Gear Flange, ST300 Planet 1964-69	1	1364366
105670	Input Shaft, ST300 (2 Ring Type)(Non-Variable Pitch) 1964-69	1	1384601
105670A	Input Shaft, ST300 (3 Ring Type)(W/Variable Pitch) 1964-67	1	1378273
44680	Governor Assembly, ST300 1964-69	1	464200
105740	Valve Body, ST300 (Non-Variable Pitch) 1964-69	1	
105740A	Valve Body, ST300 (W/Variable Pitch) 1964-65	1	
105760	Case, ST300 Round Bell 1964-69	1	
105760A	Case, ST300 Buick/Olds/Pontiac Bell 1964-69	1	
105765	Pan, ST300 Bottom 1964-69	1	
44770	Extension Housing, ST300 6” Long, W/2” Speed-O Hole 1964-69	1	
44774B	Speed-O Housing, ST300 2” Aluminum 1964-69	1	

© Whatever It Takes Transmission Parts. Inc.

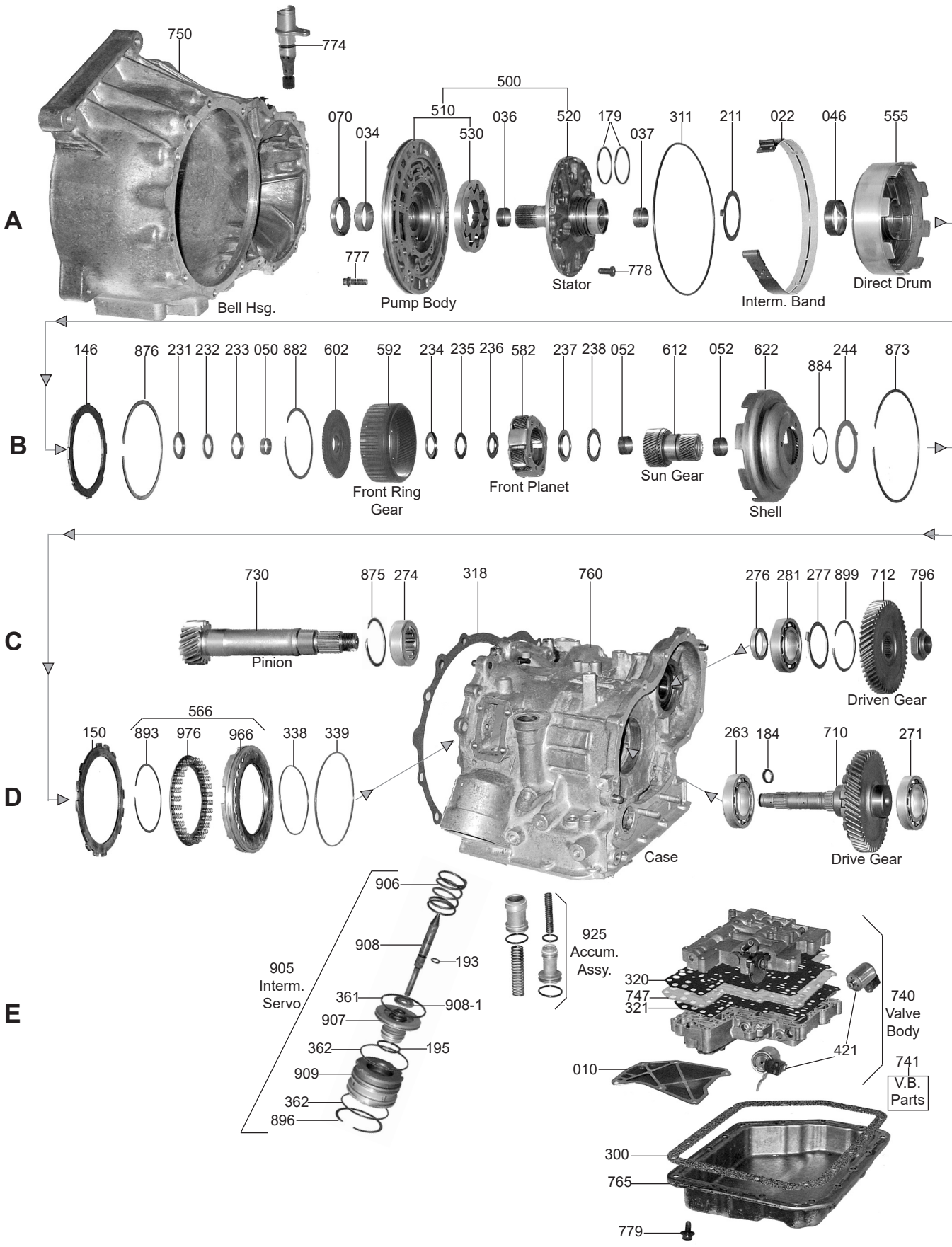

© Whatever It Takes Transmission Parts. Inc.

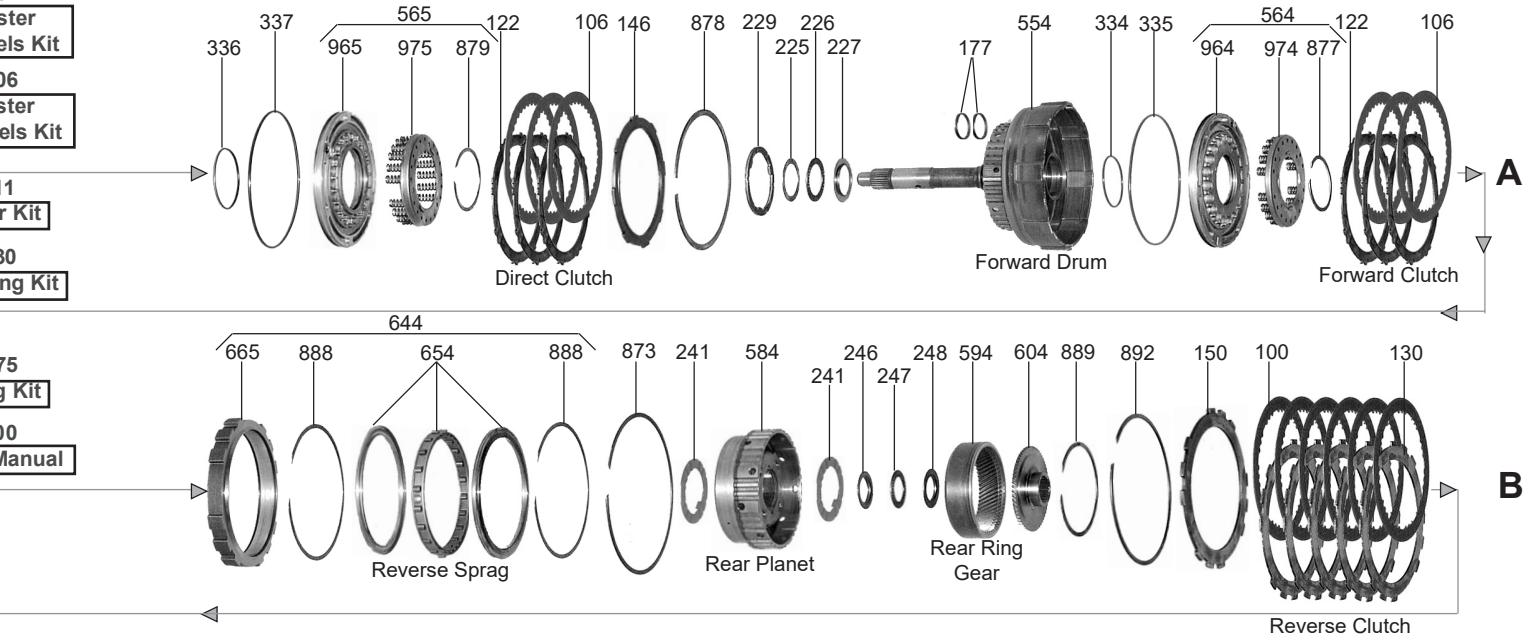

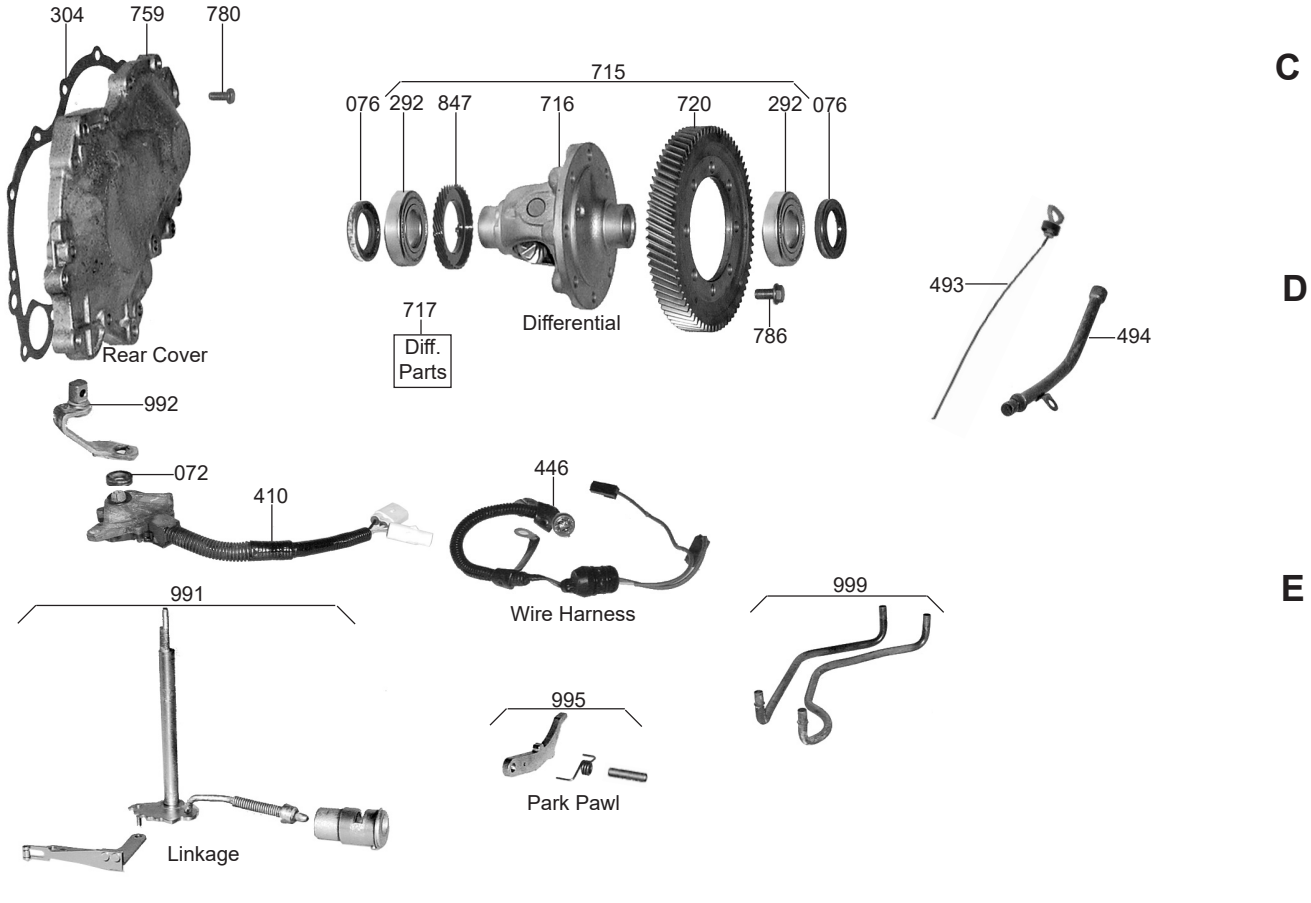

© Whatever It Takes Transmission Parts. Inc.

PART #	PAPER & RUBBER KITS	QTY.	REFERENCE #
67000A	Paper & Rubber Kit, MX17 (Sprint, Suzuki) 1985-Up	1	

PART #	OVERHAUL KITS	QTY.	REFERENCE #
67002A	Overhaul Kit, MX17 (Sprint, Suzuki) 1985-Up	1	

PART #	MASTER L/STEEL KIT	QTY.	REFERENCE #
67004A	Master L/Steels Kit, MX17 (Sprint, Suzuki) 1985-Up	1	

PART #	MASTER W/STEEL KIT	QTY.	REFERENCE #
67006A	Master W/Seels Kit, M17 (Sprint, Suzuki) 1985-Up	1	

PART #	FILTER	QTY.	REFERENCE #
67010A	Filter, MX17 (Sprint, Suzuki) 1985-Up	1	

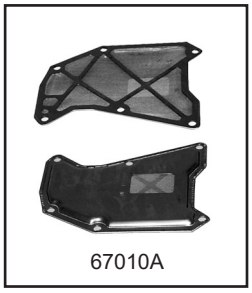

67010A

PART #	FILTER KIT	QTY.	REFERENCE #
67011A	Filter Kit, MX17 (Sprint, Suzuki) 1985-Up	1	

PART #	BANDS	QTY.	REFERENCE #
67022A	Band, MX17 (Sprint, Suzuki) (1 1/4” Wide) 1985-Up	1	

PART #	BUSHINGS	QTY.	REFERENCE #
67030A	Bushing Kit, MX17 (Sprint, Suzuki) 1985-Up	1	
57034A	Bushing, MX17 Pump Body	1	
57036B	Bushing, MX17 Stator (Front)	1	
67037A	Bushing, MX17 Stator (Rear)	1	
67046AA	Bushing, MX17 Direct Drum 1987-Up	1	
67050B	Bushing, MX17 Input Hub 1983-Up	1	
67052A	Bushing, MX17 Sun Gear	2	

PART #	METAL CLAD SEALS	QTY.	REFERENCE #
57070A	Seal, MX17 Pump 1983-Up	1	90311-38020
60072	Seal, MX17 Linkage 1983-Up	1	
67076A	Seal, MX17 Axle (2.175”OD) 1985	2	96054226

PART #	FRICTION CLUTCH	QTY.	REFERENCE #
67100A	Friction, MX17 Reverse Clutch (.067”) 33 Teeth (5.60”OD)	6	35677-32040
67106A	Friction, MX17 Forward/Direct/Overdrive Direct Clutch (.067”) 40 Teeth (4.975”OD)	3-6	35633-32050

PART #	STEEL CLUTCH	QTY.	REFERENCE #
67120C	Steel, MX17 Reverse Clutch (.071”) 12 Teeth (4.60”ID 1983-Up	5	
67122A	Steel, MX17 Forward & Direct Clutch (.071”) 8 Teeth (4.10”ID)	3-6	
67130B	Steel, MX17 Reverse Clutch (.071”) 12 Teeth (4.60”ID 1983-Up (Use 67120C)	5	

© Whatever It Takes Transmission Parts. Inc.

PART #	CLUTCH PRESSURE PLATES	QTY.	REFERENCE #
67146A	Pressure Plate, MX17 Forward & Direct Clutch (3.37mm) (8 Teeth)	1-2	
67146AA	Pressure Plate, MX17 Forward & Direct Clutch (3.00mm) (8 Teeth)	1-2	
67146AB	Pressure Plate, MX17 Forward & Direct Clutch (2.80mm) (8 Teeth)	1-2	
67146AC	Pressure Plate, MX17 Forward & Direct Clutch (2.50mm) (8 Teeth)	1-2	
67150A	Pressure Plate, MX17 Reverse Clutch	1	

PART #	OIL SEALING RINGS	QTY.	REFERENCE #
67175A	Ring Kit, MX17 (Sprint, Suzuki) 1985-Up	1	
67177AT	Ring, MX17 Forward Clutch (Teflon)	2-3	
67179A	Ring, MX17 Direct Clutch (Metal)	2	61200
67184AT	Ring, MX17 Intermediate Shaft (Teflon)	1	
67193A	Ring, MX17 Intermediate Servo Pin	1	
67195AT	Ring, MX17 2nd Coast Servo (Teflon)	1	

PART #	WASHERS & BEARINGS	QTY.	REFERENCE #
67211A	Washer, MX17 Stator To Direct Drum 1986-Up	1	
67211AA	Washer, MX17 Stator To Direct Drum 1984-86	1	35616-32010
67225A	Race, MX17 Stator To Forward Drum (.08mm) Front	1	35789-32020
67225AB	Race, MX17 Stator To Forward Drum (1.4mm) Front	1	35789-32030
67226A	Bearing, MX17 Stator To Forward Drum	1	90374-28005
67227A	Race, MX17 Stator To Forward Drum (Rear)	1	35789-32010
67229A	Washer, MX17 Direct Drum To Forward Drum 1985-86 (.138" Thick)(2.210"ID)	1	35616-32021
67229AA	Washer, MX17 Direct Drum To Forward Drum 1987-Up (.118" Thick)(2.375"ID)	1	96057151
67231A	Race, MX17 Forward Drum To Hub (Also Fits MX17 Forward Hub To Front Planet (Front)	1-2	35789-32040
67232A	Bearing, MX17 Forward Drum To Hub (Also Fits MX17 Forward Hub To Front Planet)	1-2	90374-22001
67233A	Race, MX17 Forward Drum To Hub (Rear)	1	35789-32050
67234A	Race, MX17 Forward Hub To Front Planet (Front) (Use 67231A)	1	
67235A	Bearing, MX17 Forward Hub To Front Planet (Use 67232A)	1	
67236A	Race, MX17 Forward Hub To Front Planet (Rear)	1	35789-32060
67237A	Race, MX17 Forward Hub To Front Planet (Rear)	1	35789-32070
67238A	Bearing, MX17 Front Planet To Sun Gear	1	90374-30006
67241A	Washer, MX17 Rear Planet To Rear Ring Gear (Plastic) Tabs Are In The Center ID Of Washer Straight Across Center	1	35738-12010
67244A	Washer, MX17 Shell To Sprag (2 3/4"OD) Plastic	1	35739-32011
67246A	Race, MX17 Sun Gear To Ring Gear Hub (Front)	1	35789-22010
67247A	Bearing, MX17 Sun Gear To Rear Ring Gear Hub (3 Piece Type)	1	90374-24002
67248A	Race, MX17 Sun Gear To Rear Ring Gear Hub (Rear)	1	35789-32080
67263A	Ball Bearing, MX17 Drive Transfer Gear (Front)	1	
67271A	Ball Bearing, MX17 Drive Transfer Gear (Rear)	1	
67274A	Caged Roller Bearing, MX17 Pinion (10 Rollers)	1	
67276A	Spacer, MX17 Driven Transfer Gear To Case	1	
67277A	Spacer, MX17 1 Tab For Pinion Bearing	1	
67281A	Ball Bearing, MX17 Driven Transfer Gear (Front)	1	
67292A	Ball Bearing, MX17 Differential (Front & Rear)	2	

PART #	GASKETS & RUBBER COMPONENTS	QTY.	REFERENCE #
67300A	Gasket, MX17 (Sprint, Suzuki) Bottom Pan	1	61170B
67311A	O-Ring, MX17 Pump Body	1	
67304A	Gasket, MX17 Case To Rear Cover	1	
37318A	Gasket, MX17 Bell Housing To Case	1	
67320A	Gasket, MX17 Valve Body (Upper)	1	
67321A	Gasket, MX17 Valve Body (Lower)	1	
67334A	Lip Seal, MX17 Forward Piston (Inner)	1	
67335A	Lip Seal, MX17 Forward Piston (Outer)	1	
67336A	Lip Seal, MX17 Direct Piston (Inner)	1	
67337A	Lip Seal, MX17 Direct Piston (Outer)	1	
67338A	Lip Seal, MX17 Reverse Piston (Inner)	1	
67339A	Lip Seal, MX17 Reverse Piston (Outer)	1	
67361A	O-Ring, MX17 Intermediate Servo Piston	1	
67362A	O-Ring, MX17 Intermediate Servo Cover	2	

PART #	TECHNICAL MANUALS	QTY.	REFERENCE #
67400A	Technical Manual, MX17 (Sprint, Suzuki)	1	83-SPR3TM

© Whatever It Takes Transmission Parts. Inc.

PART #	MISCELLANEOUS COMPONENTS	QTY	REFERENCE #
67493A	Dipstick, MX17	1	
67494A	Dipstick Tube, MX17	1	

PART #	ELECTRICAL COMPONENTS	QTY.	REFERENCE #
67410A	Neutral Switch, MX17	1	
67421A	Solenoid, MX17 Shift (With Bracket)	1	52-0227
67446A	Wire Harness, MX17	1	

PART #	HARD PARTS	QTY.	REFERENCE #
67500A	Pump Complete, MX17 1985-86 (67510A & 67520A)	1	
67500AA	Pump Complete, MX17 1987-Up (67510A & 67520AA)	1	
67510A	Pump Body W/Gears, MX17 (With 6 Bolts To Case) 1985-Up	1	
67520A	Stator, MX17 Flat Pads (1.850"OD Of Direct Drum Bushing Support) With Bushing Inside Rear 1985-86 (With Short Vent Channel)	1	35370-32022
67520AA	Stator, MX17 (2.025"OD Of Direct Drum Bushing Support) 1987-Up	1	

PART #	PUMP COMPONENTS	QTY.	REFERENCE #
67529A	Shaft, MX17 Stator Shaft Tube	1	90374-22002

PART #	HARD PARTS (Continued)	QTY.	REFERENCE #
67554A	Drum, MX17 Forward With Shaft (3 Clutch) 2/1984-Up	1	35701-32021
67555A	Drum, MX17 Direct (3 Clutch) 1 7/8"ID Bushing 1985-86	1	
67555AA	Drum, MX17 Direct (3 Clutch) 2"ID Bushing 1987-Up	1	
67564A	Piston Kit, MX17 Forward Clutch (3 Clutch) 2/1984-Up	1	
67565A	Piston Kit, MX17 Direct Clutch (3 Clutch) 3.300"ID (.385" Thick Piston)	1	
67565B	Piston Kit, MX17 Direct Clutch (2 Clutch) 2.250"ID (.385" Thick Piston)	1	
67566A	Piston Kit, MX17 Reverse Clutch	1	
67582A	Planet, MX17 Front	1	
67584A	Planet, MX17 Rear (1.790" Overall Height)	1	
67592A	Ring Gear, MX17 Front (1.550" Tall)	1	35743-32040
67592AA	Ring Gear, MX17 Front (1.437" Tall)	1	35743-32010
67594	Ring Gear, MX17 Rear (1.100" Tall)	1	
67602A	Hub, MX17 Front Planet Ring Gear	1	
67604A	Hub, MX17 Rear Planet	1	
67612A	Sun Gear, MX17 (2 3/8" Long) (27 Teeth)	1	
67622A	Shell, MX17 Input Sun (39 Inner Teeth)	1	35790-32050

PART #	SPRAGS & ONE WAY CLUTCHES	QTY.	REFERENCE #
67654A	Sprag, MX17 #2 Sprag (20 Elements) 4.810"OD	1	
67665A	Outer Race, MX17 #2 Sprag (4.820"ID)	1	35795-32010

PART #	HARD PARTS (Continued)	QTY.	REFERENCE #
67696A	Spacer, MX17 (For Pinion)	1	
67710A	Gear, MX17 Output With Intermediate Shaft (45 Teeth)	1	
67710AA	Gear, MX17 Output With Intermediate Shaft (51 Teeth)	1	
67712A	Gear, MX17 Transfer Driven (44 Teeth)	1	
67712AA	Gear, MX17 Transfer Driven (50 Teeth) 5 1/2"OD	1	
67712AB	Gear, MX17 Transfer Driven (50 Teeth) 4 3/4"OD	1	
67715A	Differential, MX17 (68 Teeth) 2 Groove (18 Teeth Plastic Speed-O Gear)	1	
67715AC	Differential, MX17 (69 Teeth)	1	
67715AD	Differential, MX17 (69 Teeth) 27 Teeth Metal Speed-O Gear (Diahatsu)	1	
67715AE	Differential, MX17 (70 Teeth) No Groove	1	
67715AG	Differential, MX17 (70 Teeth) 1 Groove (Suzuki)	1	
67715AH	Differential, MX17 (75 Teeth)	1	
67715AJ	Differential, MX17 (78 Teeth)	1	
67715AM	Differential, MX17 (79 Teeth) 18 Teeth Plastic Speed-O Gear	1	
67715AP	Differential, MX17 (79 Teeth) 18 Teeth Steel Speed-O Gear	1	
67715AQ	Differential, MX17 (79 Teeth) 14 Teeth Steel Speed-O Gear	1	
67730A	Pinion, MX17 (19 Teeth) 1 Groove	1	
67730AA	Pinion, MX17 (19 Teeth) No Groove	1	
67730AC	Pinion, MX17 (20 Teeth) Sprint	1	
67730AK	Ring & Pinion, MX17 (19 Teeth) 1 Groove (70 Teeth Ring Gear)	1	

© Whatever It Takes Transmission Parts. Inc.

67740A	Valve Body, MX17 (With 2 Solenoids)	1		
67750A	Bell Housing, MX17 (Top Bolts 6 1/4") 5/8"OD Speed-O Hole	1		
67750AA	Bell Housing, MX17 (Top Bolts 6 1/4") 7/8"OD Speed-O Hole	1		
67750AB	Bell Housing, MX17 (Top Bolts 5 1/2") 7/8"OD Speed-O Hole	1		
67759A	Rear Cover, MX17 (14 Bolts) Without Bracket	1		
67759AA	Rear Cover, MX17 (14 Bolts) With 3 Bolt Bracket	1		
67759AC	Rear Cover, MX17 (16 Bolt) Without Bracket	1		
67760A	Case, MX17 Without Speed Sensor	1		
67760AA	Case, MX17 With Speed Sensor	1		
67765A	Pan, MX17 Bottom	1		
67776AK	Bolt Set, MX17 Bell To Case	1		
67777BK	Bolt Set, MX17 Pump To Case	1		
67778AK	Bolt Set, MX17 Stator To Pump Body	1		
67779A	Bolt Set, MX17 Holds Pan To Case	1		
67780AK	Bolt Set, MX17 Rear Cover To Case	1		
67786AK	Bolt Set, MX17 Holds Ring Gear To Differential	1		
67796A	Nut, MX17 Pinion	1		
67875A	Snap Ring, MX17 Holds Pinion Bearing In Case	1		
67876A	Snap Ring, MX17 Forward Drum (Top)	1		
67877A	Snap Ring, MX17 Holds Forward Retainer In	1		
67878A	Snap Ring, MX17 Direct Drum (Top) (5 5/16"OD)	1		
67879AA	Snap Ring, MX17 Holds Direct Drum Retainer In 1987-Up	1		96057148
67882A	Snap Ring, MX17 Front Planet Hub To Ring Gear	1		
67884A	Snap Ring, MX17 Sun Gear To Bowl (Rear) 1.760"OD	1		
67886A	Snap Ring, MX17 Shell To Sun Gear (Front)	1		
67888A	Snap Ring, MX17 Holds Sprag In Outer Race (5.110"OD)	2		
67889A	Snap Ring, MX17 Holds Hub In Rear Ring Gear	1		
67892A	Snap Ring, MX17 Holds Reverse Top Pressure Plate	1		
67893A	Snap Ring, MX17 Holds Reverse Retainer In	1		
67896A	Snap Ring, MX17 Holds Intermediate Servo In Case	1		
67899A	Snap Ring, MX17 Holds Pinion Bearing To Case	1		
67905A	Servo Assembly, MX17 Intermediate	1		
67906A	Spring, MX17 Intermediate Servo	1		
67907A	Piston, MX17 Intermediate Servo	1		
67908A	Pin, MX17 Intermediate Servo	1		
67908A-1	Spacer, MX17 Intermediate Servo	1		
67909A	Cover, MX17 Intermediate Servo	1		
67925A	Accumulator Assembly, MX17	1		
67964A	Piston, MX17 Forward Clutch	1		
67965A	Piston, MX17 Direct Clutch (3 1/4"ID) (.385" Thick)	1		
67966A	Piston, MX17 Reverse Clutch	1		
67970C	Spring, MX17 Direct Clutch Return 1986-Up	1		
67974A	Spring, MX17 Forward Clutch Return	1		
67975A	Spring, MX17 Direct Clutch Return 1986-Up (Use 67970C)	18		
67975AA	Spring, MX17 Direct Clutch Return 1987-Up	1		96053997
67976A	Retainer W/Spring, MX17 Reverse Clutch Return	1		
67984A	Retainer, MX17 Forward Clutch Spring	1		
67985A	Retainer, MX17 Direct Clutch Spring 1987-Up	1		96057147
67991A	Linkage Assembly, MX17 (Internal)	1		
67992A	Shift Lever, MX17	1		
67995A	Park Pawl Assembly, MX17	1		
67999A	Tube Assembly, MX17	1		

© Whatever It Takes Transmission Parts. Inc.

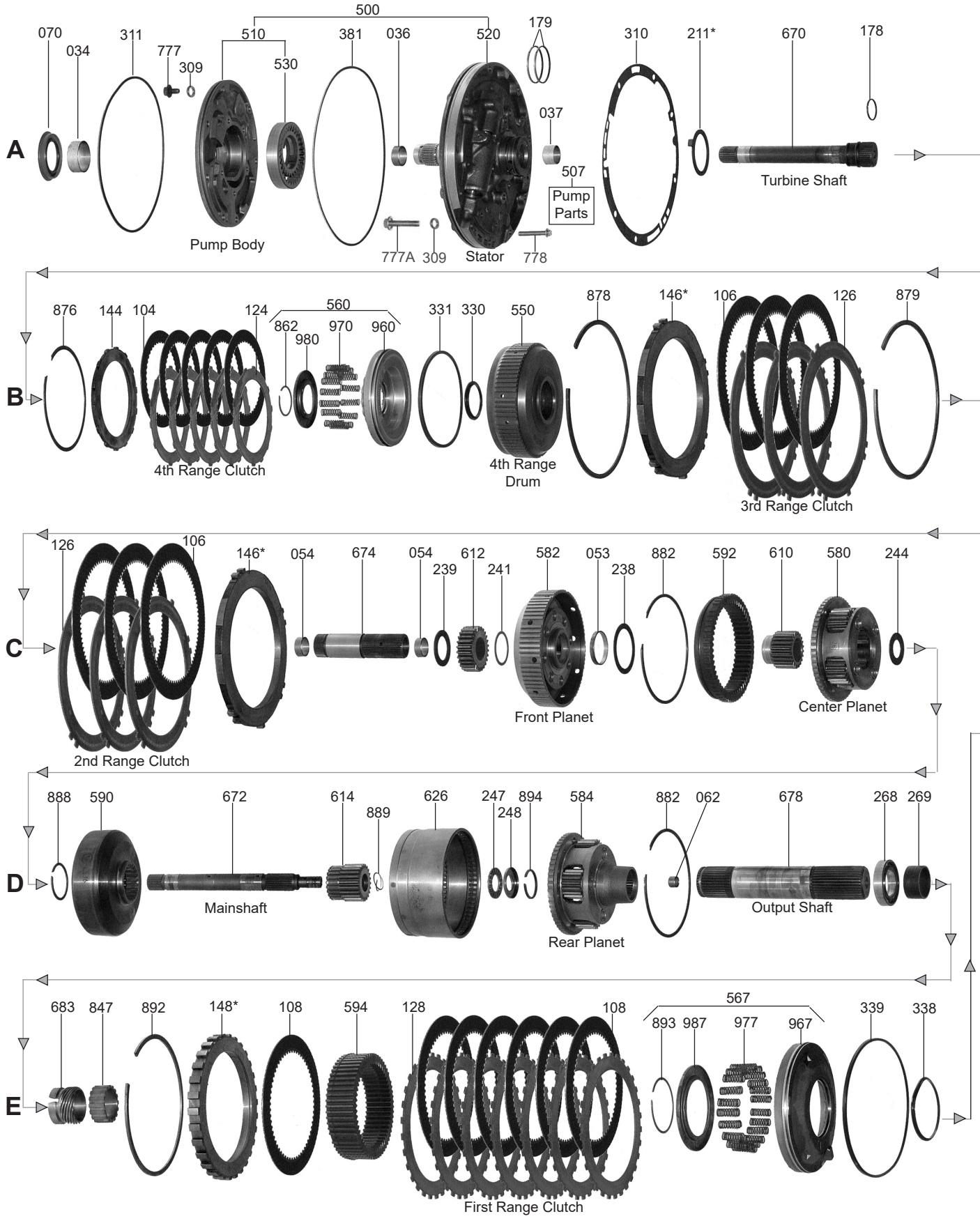
A
070
034
311
777
309
500
510
530
381
036
520
179
037
507
Pump Parts
310
211*
670
178
Turbine Shaft
Pump Body
777A
309
Stator
778
B
876
144
104
124
560
862
980
970
960
331
330
550
878
146*
106
126
879
4th Range Clutch
4th Range Drum
3rd Range Clutch
C
126
106
146*
054
674
054
239
612
241
582
053
238
882
592
610
580
244
2nd Range Clutch
Front Planet
Center Planet
D
888
590
672
614
889
626
247
248
894
584
882
062
678
268
269
Mainshaft
Rear Planet
Output Shaft
E
683
847
892
148*
108
594
128
108
567
893
987
977
967
339
338
First Range Clutch

Allison AT540 / AT543 / AT545

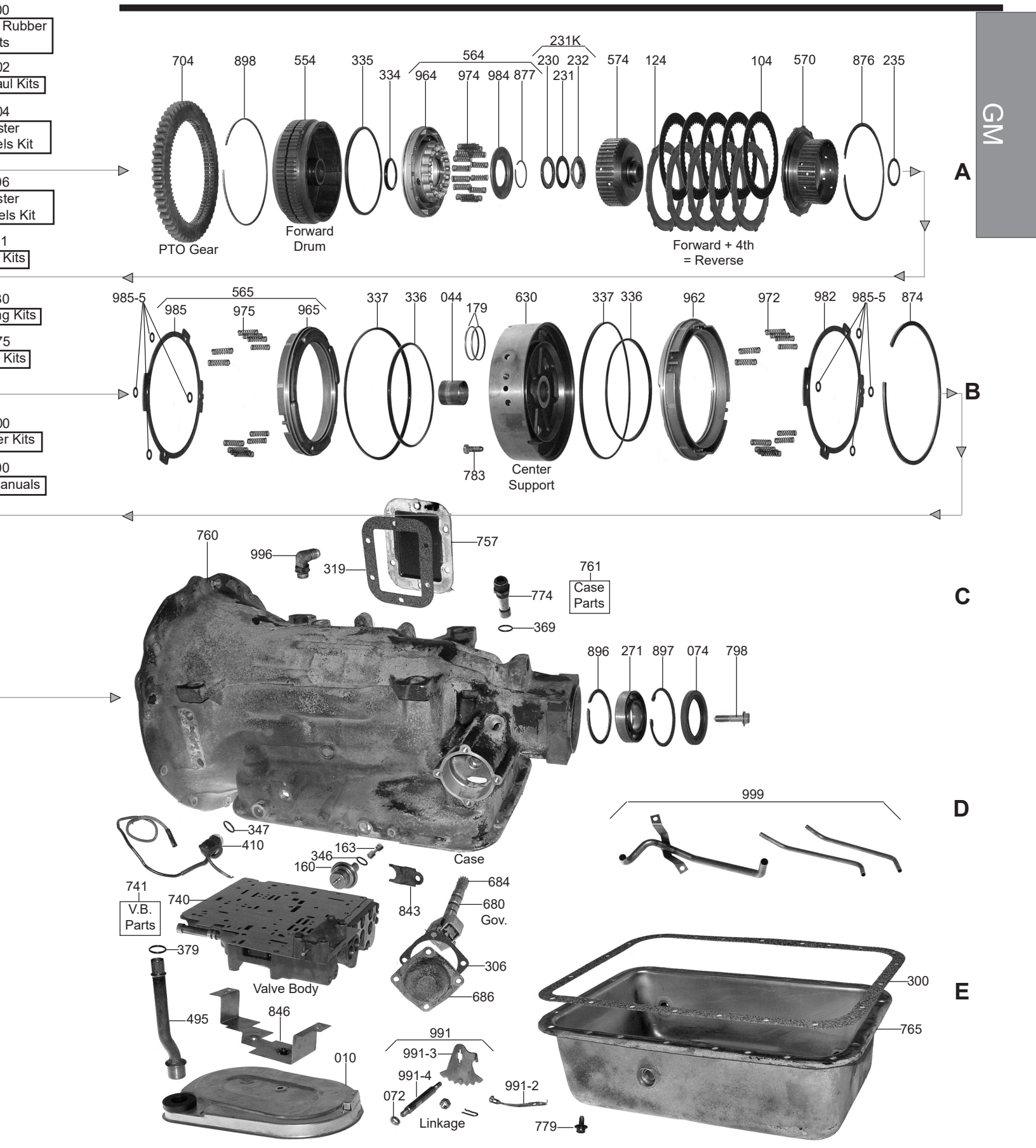

1-800-940-0197

© Whatever It Takes Transmission Parts. Inc.

PART #	PAPER & RUBBER KIT	QTY.	REFERENCE #
111000	Paper & Rubber Kit, AT540/AT545	1	

PART #	OVERHAUL KITS	QTY.	REFERENCE #
111002	Overhaul Kit, AT540/AT545	1	

PART #	MASTER L/STEEL KIT	QTY.	REFERENCE #
111004	Master L/Steels Kit, AT540/AT545	1	

PART #	MASTER W/STEEL KIT	QTY.	REFERENCE #
111006	Master W/Steels Kit, AT540/AT545	1	

PART #	FILTER	QTY.	REFERENCE #
101010	Filter, AT545	1	6883044
34010B	Filter, AT540 (Flat, Brass Screen) (400 Type Filter)	1	

PART #	FILTER KIT	QTY.	REFERENCE #
111011	Filter Kit, AT540 (Flat, Brass Screen)(400 Type Filter)	1	

PART #	BUSHINGS	QTY.	REFERENCE #
111030	Bushing Kit, AT540/Early AT545 1970-Up (Up To Serial # 3210775437)	1	
111030A	Bushing Kit, Late AT545 (7 Bushings)(From Serial # 3210775438 & Up)	1	
111034B	Bushing, AT540/AT545 Front Pump Body	1	29511860
111036	Bushing, AT540/AT545 Stator (Front) (Use 34037)	1	
34037	Bushing, AT540 (Some) Stator (Rear) (Also fits AT540/AT545 Stator Front, & Sun Gear Shaft Front & Rear)	1-4	8623944
111037B	Caged Needle Bearing, AT540/AT545 Stator (Rear) (Use 111209B)	1	
111209B	Caged Needle Bearing, AT540/AT545 Stator (Rear)	1	
111044	Bushing, AT540/AT545 Center Support (1.475”ID)(1.600”OD)	1	
111044A	Bushing, AT540/AT543/AT545 Center Support (1.539”OD)(1.405”ID)	1	
111053	Bushing, AT540/AT545 Front Planet	1	
111054	Bushing, AT540/AT545 Sun Gear (Front & Rear) (Use 34037 or 12052)	2	
111062	Bushing, AT540/AT545 Output Shaft Pilot	1	

PART #	METAL CLAD SEALS	QTY.	REFERENCE #
44070	Seal, AT540/AT545 Front Pump	1	8641826
44072	Seal, AT540/AT545 Linkage Shaft	1	8623056
111074	Seal, AT540/AT545 Rear Case (Extension Housing) (3.630”OD, 2.500”ID)	1	6778050

PART #	FRICTION CLUTCH	QTY.	REFERENCE #
111104	Friction, AT540/AT545 4th, Forward & Reverse Clutch (.080”) 42 Teeth (5.89”OD)	10	23042197
111106	Friction, AT540/AT545 2nd & 3rd Clutch (.100”) 80 Teeth (9.10”OD)	6	29537887
111108	Friction, AT540/AT545 1st Range Clutch (.097”) 60 Teeth (8.15”OD)	7	23042198

PART #	STEEL CLUTCH	QTY.	REFERENCE #
111124	Steel, AT540/AT545 4th & Forward Clutch (Use 34126A)	5-10	29530330
34126A	Steel, AT540/AT545 4th & Forward Clutch .090” (14 Teeth)	5-10	8625197
111126	Steel, AT540/AT545 2nd & 3rd Clutch .098” (9 Teeth) (7.25”ID)	6	29515399
111128	Steel, AT540/AT545 1st Range Clutch .098” (30 Teeth) (6.50”ID)	7	6831705

PART #	CLUTCH PRESSURE PLATES	QTY.	REFERENCE #
111144	Pressure Plate, AT540/AT545 4th Range Clutch (Use 34146)	1	
34146	Pressure Plate, AT540/AT545 4th Range Clutch	1	8661575
111146AA	Pressure Plate, AT540/AT545 2nd & 3rd Range Clutch (Selective)	2	
111148AA	Pressure Plate, AT540/AT545 1st Range Clutch (Selective)	1	

© Whatever It Takes Transmission Parts. Inc.

PART #	MODULATORS	QTY	REFERENCE #
111160	Modulator, AT540/AT545 (Allison) White (Adjustable)	1	29501199
111160B	Modulator, AT545 Electric Type 1970-Up	1	

PART #	OIL SEALING RINGS	QTY.	REFERENCE #
111175	Ring Kit, AT540/AT545	1	
111178	Ring, AT540/AT545 Turbine Shaft	1	8616052
111179	Ring, AT540/AT545 Stator To Forward Drum & Center Support 1970-Up	4	23046598

PART #	WASHERS & BEARINGS	QTY.	REFERENCE #
111200	Washer Kit, AT540/AT545 (5 Pieces) 1988-Up	1	
111200A	Washer Kit, AT540/AT545 (13 Pieces) 1988-Up	1	
111209B	Caged Needle Bearing, AT540 Stator (Rear)	1	23016866
111211A	Washer, AT540/AT545 Stator To Forward Drum (# 0) (.056”-.060”)	1	6831620
111211AA	Washer, AT540/AT545 Stator To Forward Drum (# 1) (.072”-.076”)	1	6831621
111211AB	Washer, AT540/AT545 Stator To Forward Drum (# 2) (.089”-.093”)	1	6831622
111211AC	Washer, AT540/AT545 Stator To Forward Drum (# 3) (.105”-.109”)	1	6831623
111211AD	Washer, AT540/AT545 Stator To Forward Drum (# 4) (.121”-.125”)	1	6831624
111211AE	Washer, AT540/AT545 Stator To Forward Drum (# 5) (.138”-.142”)	1	6831625
111231K	Bearing Set, AT540/AT545 Forward Drum To Forward Clutch Hub (Bearing & 2 Races)	1	9414211
34235	Washer, AT540/AT545 Forward Clutch Hub To 4th Range Drum (Brass)	1	8624781
111238	Washer, AT540/AT545 Front Planet To Center Planet (Fiber) (3.085”OD)	1	6831673
111239	Washer, AT540/AT545 Front Sun Gear To Center Support (Fiber) (2.135”OD)	1	29506146
111241	Washer, AT540/AT545 Front Sun Gear To Front Planet (Brass)	1	23013451
111244	Washer, AT540/AT545 Center Planet To Center Ring Gear (.062”)	1	29506147
111247	Bearing, AT540/AT545 Rear Sun Gear To Rear Planet (1.766”OD)	1	
111248	Race, AT540/AT545 Rear Sun Gear To Rear Planet (1.809”OD)	1	
111268	Ball Bearing, AT540/AT545 Output Shaft To Case (Front) (2.953”OD) (3L09)	1	
111269	Spacer, AT540/AT545 Output Shaft Bearing (Front) To Governor Drive Gear (1.924” Thick)	1	
111271	Ball Bearing, AT540/AT545 Output Shaft To Case (Rear) (3.350”OD) (NDH 3209)	1	23047970

PART #	GASKETS & RUBBER COMPONENTS	QTY.	REFERENCE #
111300	Gasket, AT540/AT545 Bottom Pan (Also Fits MT600 Series)	1	29501160
111300A	Gasket, AT540/AT545 Bottom Pan (Also Fits MT600 Series) (Armstrong)	1	
111300F	Gasket, AT540/AT545 Bottom Pan (Also Fits MT600 Series) (Farpak)	1	
34305	Gasket, AT540/AT543/AT545 Extention Housing	1	8624709
34306	Gasket, AT540/AT545 Governor Cover	1	8623263
44309	Gasket, AT540/AT545 Stator Bolt Washer	6	8626281
111310	Gasket, AT540/AT545 Pump To Case	1	23015883
44311	O-Ring, AT540/AT545 Pump Body	1	8626309
111319	Gasket, AT540/AT545 PTO Cover	1	29501161
34334C	Lip Seal, AT540 4th Range Clutch (Inner)	1	8623121
34335	Lip Seal, AT540/AT545 Forward & Direct Clutch (Outer)	1	8623101
34336	Lip Seal, AT540/AT545 Forward & Direct Clutch (Inner)	1	8623102
103368	O-Ring, AT540/AT545 Modulator (Also Fits Speed-O Housing & Neutral Safety Switch)	1-3	10054241
111346	O-Ring, AT540/AT545 Modulator (Use 103368)	1	10054241
111379	O-Ring, AT540/AT545 Filler Tube (Use 12368A)	1	1363951
12368A	O-Ring, AT540/AT545 Filler Tube	1	1363951
111381	O-Ring, AT540/AT545 Pump Stator (Lathe Cut)	1	

PART #	TECHNICAL MANUALS	QTY.	REFERENCE #
111400A	Service Manual, AT540/AT545	1	

PART #	ELECTRICAL COMPONENTS	QTY.	REFERENCE #
111410A	Switch, AT540/AT545 Neutral Safety	1	
111412A	Switch, AT540/AT545 Pressure (On Passenger Side Of Case)	1	

PART #	MISC. COMPONENTS	QTY.	REFERENCE #
111495A	Filter Tube, AT540 (6 1/2” Long) (3/4”OD At Each End)	1	
111495C	Filter Tube, AT545 (7 15/16” Long) (1 3/16”OD At 1 End)	1	

© Whatever It Takes Transmission Parts. Inc.

PART #	HARD PARTS	QTY.	REFERENCE #
34510	Pump Body, AT540/AT545 (6 Bolt)(Cast # 895)	1	8679988
34510A	Pump Body, AT540/AT545 (8 Bolt)(Cast # 895)	1	
34510B	Pump Body, AT540/AT545 (8 Bolt)(Cast # 121)	1	
111510B	Pump Body, AT545 (Cast # 919) (6 Bolts From Front Of Body To Stator)	1	29537354
111510CA	Pump Body, AT545 (Cast # 336) (7 Bolts From Front Of Body To Stator)	1	
111520A	Stator, AT540 (Uses Pump Body Cast # 895)	1	23014020
111520B	Stator, AT545 (uses A Body W/Cast # 919)(With 6 Bolts From Front Of Body To Stator)(With 3 Long & 2 Short Bolts From Rear Of Stator To Body)(With 2 Breaks In Th Flat Gasket Surface On Rear)(With .435"ID Vent Hole)	1	
111520BA	Stator, AT545 (Uses A Body With Cast #919)(With 6 Bolts From Front Of Body To Stator) (With 3 Long & 2 Short Bolts From Rear Of Stator To Body)(With 3 Breaks In Flat Gasket Surface On Rear)(With .310"ID Vent Hole)	1	
111520BB	Stator, AT545 (Uses A Body With Cast #919)(With 6 Bolts From Front Of Body To Stator) (With 5 Long Bolts From Rear Of Stator To Body)(With 2 Breaks In The Flat Gasket Surface On Rear)(With .435"ID Vent Hole)	1	
111520CA	Stator, AT545 (Uses Pump Body Cast # 919) (With 7 Bolts From Front Of Body To Stator)	1	
44530AC	Pump Gear Set, AT540/AT545 (.727" Thick)	1	
111550A	Drum, AT540/AT545 4th Range Clutch (5 Clutch) (No Snap Ring Groove On The OD)(1.350"OD Front Splines On # 674, Must Measure)(Also Fits AT540/AT545 Forward Drum W/Out PTO)	1-2	29506156
111550AA	Drum, AT540/AT545 4th Range Clutch (5 Clutch)(No Snap Ring Groove On OD)(1.398"OD Front Splines On # 674, Must Measure)(Also Fits AT540/AT545 Forward Drum Without PTO)	1-2	
111554	Drum, AT540/AT545 Forward Drum (No Snap Ring Groove On The OD) (Use 111550)	1	
111554A	Drum, AT540/AT545 Forward Clutch (5 Clutch) (With Snap Ring Groove On The OD For The PTO Gear)	1	29506185
111560	Piston Kit, AT540 4th Range Drum (Use 111564)	1	
111560C	Piston Kit, AT545 4th Range Drum (Use 111564C)	1	
111562	Piston Kit, AT540/AT545 2nd Range Clutch (Use 111565)	1	
111564	Piston Kit, AT540 Forward Drum (.680" thick) (Also Fits AT540 4th Range Drum)	1-2	
111564C	Piston Kit, AT545 Forward Drum (.730" thick) (Also Fits AT545 4th Range Drum)	1-2	
111565	Piston Kit, AT540/AT545 3rd Range Clutch (Also Fits 2nd Range Clutch)	1-2	
111567	Piston Kit, AT540/AT545 1st Range Clutch	1	
111570	Hub, AT540/AT545 4th Range Clutch (Use 34575)	1	
111574	Hub, AT540/AT545 Forward Clutch (Use 34574E)	1	
34574E	Clutch Hub, AT540 (All) / AT545 (Up To Serial # 3210775436) Forward Clutch	1	29506145
111574A	Clutch Hub, AT545 Forward Clutch (2.113" Overall Height)(1.150"ID Of Hub)	1	
34575	Hub, AT545 4th Range Clutch (1.230" Thick)(Fits Up To Serial # 3210610128)	1	
111580	Planet, AT540/AT545 Center Planet (4 Gear) (Straight Teeth)	1	6831676
111582	Planet, AT540/AT545 Front Planet (4 Gear) (Straight Teeth)	1	23046074
111584	Planet, AT540 Rear (4 Gear, No Groove) Can Use 111584C	1	6837719
111584C	Planet, AT545 Rear (4 Gear, 1 Groove) Can Use 111584	1	
111590	Ring Gear, AT540/AT545 Center Planet (54 Teeth)	1	
111592	Ring Gear, AT540/AT545 Front Planet (54 Teeth)	1	
111594	Ring Gear, AT540/AT545 Rear Planet (Straight Teeth)	1	
111610	Sun Gear, AT540/AT545 Center (22 Teeth) (1.963" Long)	1	29506150
111612	Sun Gear, AT540 Front Planet (26 Teeth, No Groove) Can Use 111612C	1	6835732
111612C	Sun Gear, AT545 Front Planet (26 Teeth, 1 Groove) Can Use 111612	1	29506151
111614	Sun Gear, AT540/AT545 Rear (22 Teeth) 2.142" Long (Straight Teeth)	1	29506149
111626	Connecting Drum,AT540/AT545 Center Planet To Rear Planet	1	
111630	Center Support, AT540/AT545 (Aluminum) (1.404"ID Of Bushing)	1	
111630A	Center Support, AT540/AT545 (Aluminum) (1.378"ID Of Bushing)	1	
111630B	Center Support, AT540/AT545 (Aluminum) (1.460"ID Of Bushing)	1	29525518
111670	Shaft, AT540/AT545 Input (9 1/4" Long, 1 Ring)	1	29525516
111672	Shaft, AT540/AT545 Main (10 5/8" Long)	1	29524363
111674	Shaft, AT540/AT545 Sun Gear (5.475" Long)(1.402"OD Bushing Land)(1.350"OD Front Splines)	1	29506158
111674AA	Shaft, AT540/AT545 Sun Gear (5.475"Long)(1.402"OD Bushing Land)(1.398"OD Front Splines)	1	
111678A	Shaft, AT540/AT545 Output Shaft (9 1/2" Long) (Bolt-On Yoke Type)	1	
111680	Governor Assembly, AT540/AT545 (ID # 460)	1	6881466
111680A	Governor Assembly, AT540/AT545 (ID # 461)	1	6885570
111680B	Governor Assembly, AT540/AT545 (ID # 462)	1	6885571
111681-5	Roll Pin, AT540/AT545 Holds Governor Drive Gear To Output Shaft	1	
111683	Gear, AT540/AT545 Governor (Drive) (12 Teeth) (1 Notch) (Steel)	1	29503064
34684B	Gear, AT540/AT545 Left Angled (With 1 Pin & 2 Nails)	1	
111686	Cover, AT540/AT545 Governor	1	
111704	Gear, AT540/AT545 PTO Ring	1	
111740A	Valve Body, AT540/AT545	1	
111757	Cover, AT540/AT545 PTO (6 Bolt)	1	

© Whatever It Takes Transmission Parts. Inc.

111760A	Case, AT540 (W/PTO Cover) (Cast # 6839580) Can Use 111760C	1	
111760C	Case, AT545 (W/PTO Cover) (Cast # 1950074) Can Use 111760A	1	
111765A	Pan, AT540 Bottom (W/1 Screw In Dipstick Hole)	1	
111765C	Pan, AT545 Bottom (W/2 Screw In Dipstick Holes)	1	
111774A	Speed-O Housing, AT540 (W/20 Teeth Gear) 3 1/4" Long (Screw-In)	1	
111777K	Bolt Set, AT540 Pump Body To Stator (Front) 6 Pieces	1	
111777AK	Bolt Set, AT540/AT545 Stator To Case (9 Pieces)	1	
111778K	Bolt Set, AT540 Stator To Pump Body (Rear) (5 Pieces)	1	
111779K	Bolt Set, AT540/AT545 Bottom Pan To Case (21 Per Set)	1	
111782AK	Bolt Set, AT540 Valve Body To Case (19 Pieces)	1	
111782CK	Bolt Set, AT545 Valve Body To Case (19 Pieces)	1	
111783	Bolt, AT540/AT545 Center Support	1	
111798	Bolt, AT540/AT545 Output Flange (3/4" Head) 1/2" x 20 Fine Thread	1	
111841	Yoke AT540/AT545 Output Shaft (4 Bolt, 6" Long)	1	
44843A	Bracket, AT540/AT545 Modulator	1	6661285
111846C	Bracket, AT545 Filter To Valve Body	1	
111847A	Gear, AT540 Speed-O Drive (5 Teeth) (Steel)	1	
111847C	Reluctor, AT545 Drive Speed-O (16 Teeth)	1	29513278
111862	Snap Ring, AT540 4th Range Piston Retainer (Use 34877)	1	
111862C	Snap Ring, AT545 4th Range Piston Retainer (Use 111877C)	1	
111874	Snap Ring, AT540/AT545 Holds 2nd Range Retainer In Case (Use 111878)	1	
111876	Snap Ring, AT540/AT545 Forward & 4th Range Clutch (Use 34878)	2	
34877	Snap Ring, AT540 Forward Piston Retainer (Also Fits AT540 4th Range Piston Retainer)	1-2	8623105
111877C	Snap Ring, AT545 Forward Piston Retainer (Also Fits AT545 4th Range Piston Retainer)	1-2	8684730
34878	Snap Ring, AT540/AT545 Forward & 4th Range Clutch	2	8623112
111878	Snap Ring, AT540/AT545 Holds 3rd Range Clutch Pressure Plate In (Also Fits AT540/AT545 Center Support (Both Sides)	1-3	
111879	Snap Ring, AT540/AT545 Holds 3rd Range Retainer In Case (Use 111878)	1	
111882	Snap Ring, AT540/AT545 Holds Front Ring Gear To Center Planet & Holds Rear Planet To Connecting Drum)	2	
111888	Snap Ring, AT540/AT545 Holds Rear Sun Gear To Center Ring Gear	1	
111889	Snap Ring, AT540/AT545 Holds Rear Sun Gear To Main Shaft (Spiral)	1	
111892	Snap Ring, AT540/AT545 Holds 1st Range Clutch Pressure Plate In Case	1	
111893	Snap Ring, AT540/AT545 Holds 1st Range Piston Retainer In Case	1	
111894	Snap Ring, AT540/AT545 Holds Rear Planet To Output Shaft	1	
111896	Snap Ring, AT540/AT545 Stop For Rear Case Bearing (Stays In Case)	1	6831704
111897	Snap Ring, AT540/AT545 Holds Rear Output Bearing In Case	1	9418788
111898	Snap Ring, AT540/AT545 Holds PTO Gear To Forward Drum	1	6831639
111960	Piston, AT540 4th Range Drum (.680" Thick) (Use 111964)	1	
111960C	Piston, AT545 4th Range Drum (.730" Thick) (Use 111964C)	1	
111962	Piston, AT540/AT545 2nd Range Clutch (Use 111965)	1	
111964	Piston, AT540 Forward Clutch (4 Ears)(Cast # 68316321) (Also Fits AT540 4th Range Clutch)	1-2	
111964B	Piston, AT545 Forward Clutch (No Ears) (Cast # 29505882) (Also Fits AT545 4th Range Clutch)	1-2	
111964C	Piston, AT545 Forward Clutch (No Ears)(Cast # 6884280) (Also Fits AT545 4th Range Clutch)	1-2	
111965	Piston, AT540/AT545 3rd Range Clutch (Aluminum) Cast # 6834817(Also Fits AT540/AT545 2nd Range Clutch)	1-2	6834817
111967	Piston, AT540/AT545 1st Range Clutch (Cast # 6834816)	1	
111970	Springs, AT540/AT545 4th Range Clutch Return (Use 34974)	16	
111972	Springs, AT540/AT545 2nd Range Clutch Return (Use 111975)	12	
34974	Springs, AT540/AT545 Forward Clutch Return And 4th Range Clutch	16-32	8624101
111975K	Spring Set, AT540/AT545 3rd Range Clutch Return (12 Pieces) (Also Fits AT540/AT545 2nd Range Clutch Return)	12-24	
111977K	Spring Set, AT540/AT545 1st Range Clutch Return (22 Pieces)	22	
111980	Retainer, AT540/AT545 4th Range Clutch Spring (Use 34984)	1	
111982	Retainer, AT540/AT5452nd Range Clutch Spring (Use 111985)	1	
34984	Retainer, AT540/AT545 Forward Clutch Spring (Also Fits 4th Range Clutch Spring Retainer)	1-2	8623104
111985	Retainer, AT540/AT545 3rd Range Clutch Spring (Also Fits AT540/AT545 2nd Range Clutch Spring Retainer)	1-2	
111985-5K	Lock Ring Set, AT540/AT545 3rd Range Spring Retainer (4 Pieces) (Also Fits AT540/AT545 2nd Range Spring Retainer)	4-8	
111987	Retainer, AT540/AT545 1st Clutch Spring	1	
111991	Linkage Assembly, AT540/AT545 Internal	1	
111996	Cooler Fitting, AT540/AT545 (Elbow, Screw-In)	2	
111999A	Tube Set, AT540	1	
111999C	Tube Set, AT545	1	

© Whatever It Takes Transmission Parts. Inc.

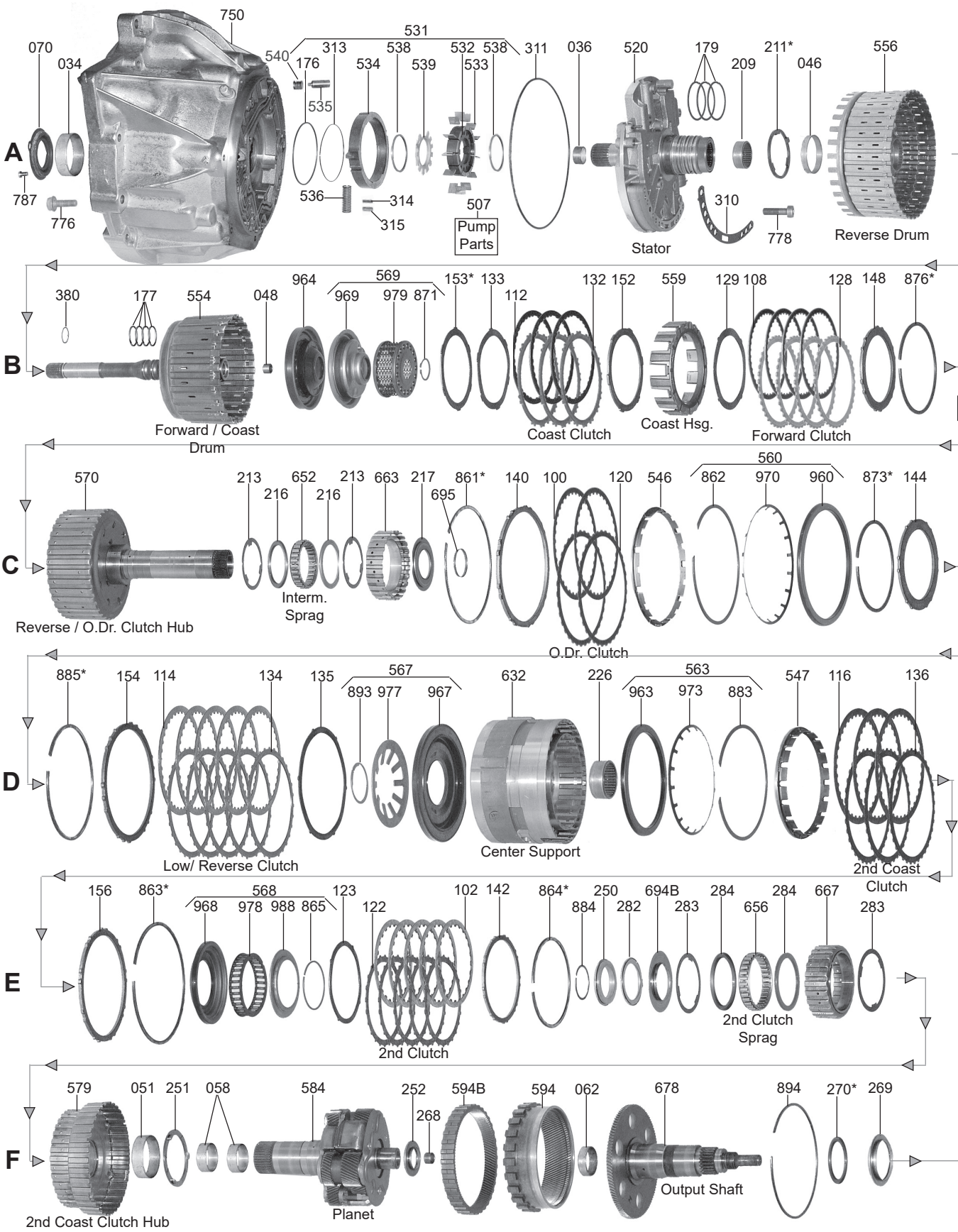

002 Overhaul Kits

004 Master L/ Steels Kit

006 Master W/ Steels Kit

030 Bushing Kits

119 Friction Module

175 Ring Kits

200 Washer Kits

400 Technical Manuals

© Whatever It Takes Transmission Parts. Inc.

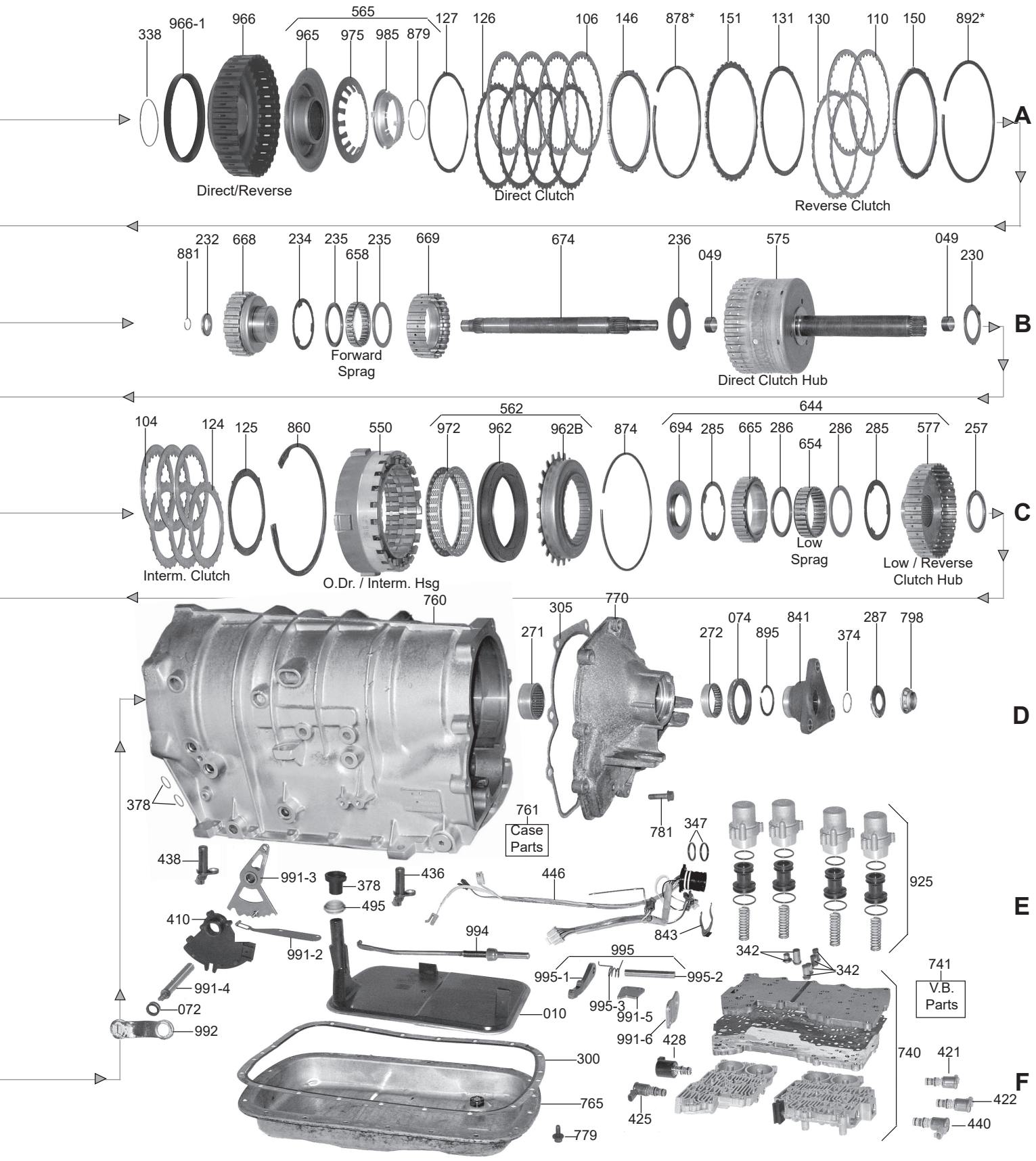

© Whatever It Takes Transmission Parts. Inc.

PART #	OVERHAUL KIT	QTY	REFERENCE #
144002A	Overhaul Kit, 5L40E/5L50E (BMW/Cadillac)(Without Bonded Pistons) 2000-Up	1	

PART #	MASTER L/STEELS KIT	QTY	REFERENCE #
144004A	Master L/Steels Kit, 5L40E/5L50E (Without Molded Pistons) 2000-Up	1	

PART #	MASTER W/STEELS KIT	QTY	REFERENCE #
144006A	Master W/Steels Kit, 5L40E/5L50E 2002-Up (For Bonded Pistons Sell 144960AK)	1	
144006C	Master W/Steels Kit, 5L40E/5L50E 1999-01 (With 36 External Teeth On The 2nd Coast Clutch Friction)(For Bonded Pistons Sell 144960CK)	1	

PART #	FILTERS	QTY	REFERENCE #
144010A	Filter, 5L40E (BMW/GM) Deep Pan (With White Plastic Neck Spacer)(1/2 Plastic & 1/2 Metal) (Pick-Up Is Just 2 Slots Cut Out In The Metal On The Bottom) 1999-Up	1	96042545
144010AA	Filter, 5L40E/5L50E (BMW/GM) Deep Pan (With White Plastic Neck Spacer)(1/2 Plastic & 1/2 Metal)(Pick-Up Is Black Plastic 9/16" Tall, 5 1/8" Wide, Attached To The Metal Bottom) 2000-Up	1	24-11-7-510-012
144010C	Filter, 5L40E (BMW) Shallow Pan (No White Plastic Neck Spacer)(1/2 Plastic & 1/2 Metal) (Pick-Up Is Just 2 Slots Cut Out In The Metal 1/2 On The Bottom) 2000-Up	1	96041844

PART #	BUSHINGS	QTY	REFERENCE #
144030A	Bushing Kit, 5L40E 2000-Up (Use T-98325 Installer Set)	1	
T-98325	Bushing Installer Set, 5L40E (For 144030A Bushing Kit)	1	
74034	Bushing, 5L40E Converter Housing (Babbit)	1	
74034B	Bushing, 5L40E Converter Housing (Teflon)("Dura-Life", "Split")	1	
144036A	Bushing, 5L40E Stator (Front) (.895"ID) 2000-Up	1	
144046A	Bushing, 5L40E Reverse Drum (2.275"ID) 2000-Up	1	
144048A	Bushing, 5L40E Forward/Coast Clutch Drum (Rear) (.665"ID) 2000-Up	1	
144049A	Bushing, 5L40E Direct Clutch Hub Shaft (.908"ID) (Takes 2) 2000-Up	2	
144051A	Bushing, 5L40E 2nd Coast Clutch Hub (2.130"ID) 2000-Up	1	
144058A	Bushing, 5L40E Planet Shaft (Front Bushing) 2000-Up	1	
144058AA	Bushing, 5L40E Planet Shaft (Rear Bushing) 2000-Up	1	
144062A	Bushing, 5L40E Output Shaft (Front) (1.210"ID) 2000-Up	1	

PART #	METAL CLAD SEALS	QTY	REFERENCE #
144070A	Seal, 5L40E Front (Bell Housing) With 2 Bolt Holes 2000-Up	1	96041855
84072A	Seal, 5L40E Manual Shaft (.290" Thick)(.760"OD)	1	
144074A	Seal, 5L40E Rear (2.450"OD) (.280" Thick) 2000-Up	1	96042587

PART #	FRICTION CLUTCH	QTY	REFERENCE #
144100A	Use 144110A	2	
144102A	Friction, 5L40E (BMW) 2nd Clutch (1 Sided) 24 Teeth Internal (.064") 5.428"OD 2000-Up	5	
144102C	Friction, 5L40E (Cadillac) 2nd Clutch (1 Sided) 24 Teeth Internal (.064") 5.115"OD 2003-Up	2	
144104A	Friction, 5L40E Intermediate Clutch (1 Sided) 24 Teeth Internal (.065") 2000-Up	3	
144106A	Friction, 5L40E Direct Clutch (1 Sided) 36 Teeth Internal (.063")(6.800"OD) 2000-Up (Also Fits Low/Reverse Clutch # 114)(Also Fits 2nd Coast Clutch # 116)	4-9	
144108A	Friction, 5L40E Forward Clutch (1 Sided) 24 Teeth Internal (.063") 2000-Up	4	
144110A	Friction, 5L40E Reverse Clutch (1 Sided) 36 Teeth Internal (.063") 2000-Up (Also Fits Overdrive Clutch #100)	4-9	
144112A	Friction, 5L40E Coast Clutch (1 Sided) 24 Teeth Internal (.064") 2000-Up	5	
144114A	Use 144106A	5	
144116A	Friction, 5L40E (BMW) 2nd Coast Clutch (1 Sided)36 Teeth Internal(.063")(6.925"OD) 2000-Up	3	
144116C	Use 144106A (Cadillac)	3	
144119A	Friction Module, 5L40E 2002-Up (With 6 External Teeth On The 2nd Coast Clutch Friction)	1	
144119C	Friction Module, 5L40E 1999-01 (With 36 External Teeth On The 2nd Coast Clutch Friction)	1	
144120A	Use 144130A	2	
144122A	Friction, 5L40E 2nd Clutch (.064") 24 Teeth External (5.465"OD) 1 Sided 2002-Up (Dynax)	5	
144122C	Friction, 5L40E (Cadillac) 2nd Clutch (1 Sided) 24 Teeth External (.064") 5.154"OD 2003-Up	5	

PART #	STEEL CLUTCH	QTY	REFERENCE #
144123A	Steel, 5L40E (BMW) 2nd Clutch (4 Teeth, .087") 5.455"OD (Waved) 2000-Up	1	

© Whatever It Takes Transmission Parts. Inc.

144123C	Steel, 5L40E (Cadillac) 2nd Clutch (4 Teeth, .095") 5.135"OD (Waved) 2003-Up	1
144124A	Friction, 5L40E Intermediate Clutch (1 Sided) 24 Teeth External (.065") 2000-Up	3
144125A	Steel, 5L40E Intermediate Clutch (4 Teeth, .070") Waved 2000-Up	1
144126A	Use 144136C	4
144127A	Cushion, 5L40E Direct Clutch (6 Teeth, .075") 6 5/16"OD 2000-Up	1
144128A	Friction, 5L40E Forward Clutch (1 Sided) 24 Teeth External (.063") (4.125"ID) 2000-Up	4
144129A	Steel, 5L40E Forward Clutch (6 Teeth, .061") Waved 2000-Up	1
144130A	Friction, 5L40E Reverse Clutch (1 Sided) 36 Teeth External (.062") 2000-Up (Also Fits Overdrive Clutch #120)	2-4
144131A	Steel, 5L40E Reverse Clutch (12 Teeth, .074") Waved 2000-Up	1
144131AA	Steel, 5L40E Reverse Clutch (6 Teeth, .078") Waved 2000-Up	1
144132A	Friction, 5L40E Coast Clutch (1 Sided) 12 Teeth External (.063") 2000-Up	5
144133A	Steel, 5L40E Coast Clutch (4 Teeth, .053") Waved 2000-Up	1
144133AA	Steel, 5L40E Coast Clutch (6 Teeth, .053") Waved 2000-Up	1
144134A	Friction, 5L40E Low/Reverse Clutch (1 Sided) 29 Teeth External (.063") 2000-Up	5
144135A	Steel, 5L40E Low/Reverse Clutch (6 Teeth, .077") Waved 2000-Up	1
144136A	Friction, 5L40E 2nd Coast Clutch (.063")(6 External Teeth)(1 Sided) 2002-Up	3
144136C	Friction, 5L40E 2nd Coast Clutch (.063")(36 External Teeth)(1 Sided) 1999-01 (Also Fits 5L40E Direct Clutch #126 1999-Up)	3
144136D	Friction, 5L40E 2nd Coast Clutch (.063")(24 External Teeth)(1 Sided) 1999-Up	3

PART #	PRESSURE PLATES	QTY	REFERENCE #
144140A	Use 144150A	1	
144142A	Pressure Plate, 5L40E (BMW) 2nd Clutch (12 Teeth) .198" Thick (5.460"OD) 2000-Up	1	
144142C	Pressure Plate, 5L40E (Cadillac) 2nd Clutch (12 Teeth) .198" Thick (5.150"OD) 2003-Up	1	
144144A	Pressure Plate, 5L40E Intermediate Clutch (12 Teeth, .198" Thick) 2000-Up	1	
144146A	Pressure Plate, 5L40E Direct Clutch (Top) (18 Teeth, .199"Thick) (6 1/16"ID) 2000-Up (Also Fits 5L40E (Cadillac) 2nd Coast Clutch #156 2003-Up)	1	
144148A	Pressure Plate, 5L40E Forward Clutch (Top) (12 Teeth, .200" Thick) 2000-Up	1	
144150A	Pressure Plate, 5L40E Reverse Clutch (Top) 18 Teeth, .198" Thick (6 7/16"ID) 2000-Up (Also Fits Overdrive Clutch #140)	1-2	
144151A	Apply Plate, 5L40E Reverse Clutch (36 Teeth, .119" Thick) (6 7/16"OD) 2000-Up	1	
144152A	Pressure Plate, 5L40E Coast Clutch (Top) 6 Teeth, .078" Thick (4.125"ID) 2000-Up	1	
144153A	Apply Plate, 5L40E Coast Clutch (6 Teeth) Selective 2000-Up	1	
144154A	Pressure Plate, 5L40E Low/Reverse Clutch (18 Teeth, .198" Thick) 2000-Up	1	
144156A	Pressure Plate, 5L40E (BMW) 2nd Coast Clutch (6 Teeth) (.200" Thick) 2000-Up	1	
144156C	(Use 144146A)	1	

PART #	SEALING RINGS	QTY	REFERENCE #
144175AT	Ring Kit, 5L40E 2000-Up	1	
144176AT	Ring, 5L40E Pump Outer Slide (Teflon) 2000-Up	1	
144177AT	Ring, 5L40E Forward/Coast Clutch Drum (Front 1 Is Solid) (Teflon) 2000-Up	4	
144177BT	Ring, 5L40E Forward/Coast Clutch Drum (Rear 3 Are Scarf Cut) (Teflon) 2000-Up	4	
144179AT	Ring, 5L40E Stator To Reverse Drum (Teflon) (Takes 3) 2000-Up	3	

PART #	WASHERS & BEARINGS	QTY	REFERENCE #
144200A	Washer Kit, 5L40E 2000-Up (12 Washers)	1	
144209A	Caged Needle Bearing, 5L40E Stator (Rear) (HK3512B) 2000-Up	1	
144211A	Washer, 5L40E Stator To Reverse Drum (Selective) Plastic (With 1 Outer Tab & 3 Inner Tabs) 2000-Up	1	
144213A	Washer, 5L40E Intermediate Sprag (Both Sides) .040" Thick (Plastic With 3 Inner Tabs) (3.220"OD) 2000-Up	1	
144217A	Bearing W/Races, 5L40E Intermediate Sprag To Low Sprag 2000-Up	1	
144226A	Caged Needle Bearing, 5L40E Center Support (HK 5020 B) 2000-Up	1	
144230A	Washer, 5L40E Direct Hub To Reverse/Overdrive Hub (.064" Thick) (Plastic, 3 Tab) 2000-Up	1	96042701
144232A	Bearing W/Races, 5L40E Forward/Coast Drum To Hub 2000-Up		
144234A	Washer, 5L40E Forward Sprag Inner Race To Sprag (3 Inner Tabs) (.049" Thick) (3.225"OD) 2000-Up	1	
144236A	Washer, 5L40E Forward Sprag To Direct Clutch Hub (.062" Thick) (Plastic 3 Tab) 2000-Up	1	
144250A	Bearing W/Races, 5L40E Center Support To 2nd Clutch Sprag 2000-Up (Has A Thick Spacer Race On One Side)	1	
144251A	Washer, 5L40E 2nd Coast Clutch Hub To Planet (Plastic 3 Tab) (3.638"OD) 2000-Up	1	
144252A	Bearing W/Races, 5L40E Planet To Output Shaft (Stepped) 2000-Up	1	96042818
144257A	Bearing W/Races, 5L40E Low/Reverse Clutch Hub To Center Support 2000-Up	1	
144268A	Caged Needle Bearing, 5L40E Inside Planet Pilot (.780"OD) 2000-Up (Cast # NADELLA HK 1412)	1	

© Whatever It Takes Transmission Parts. Inc.

PART #	WASHERS & BEARINGS (Continued)	QTY	REFERENCE #
144269A	Bearing W/1 Race, 5L40E Output Shaft To Extention Housing (2.598"OD) 2000-Up	1	96042818
144270AA	Shim, 5L40E Output Shaft To Extention Housing (Selective) (2.440"OD) 2000-Up	1	96042543
144271A	Caged Needle Bearing, 5L40E Extention Housing (Front) (HK 4520B) 2000-Up	1	
144272A	Caged Needle Bearing, 5L40E Extention Housing (Rear) (HK 4012B) 2000-Up	1	
144282A	Bearing W/Races, 5L40E #250 Bearing To 2nd Clutch Sprag 2000-Up	1	
144283A	Washer, 5L40E 2nd Clutch Sprag (Both Sides) (Plastic W/3 Inner Tabs) (3.638"OD) 2000-Up	2	
144285A	Washer, 5L40E Low Sprag (Both Sides) (Plastic W/3 Inner Tabs) (3.577"OD) 2000-Up	2	
144287A	Washer, 5L40E Yoke To Output Shaft Nut 2000-Up	1	

PART #	GASKETS & RUBBER COMPONENTS	QTY	REFERENCE #
144300AW	Gasket, 5L40E Bottom Pan (20 Bolt Holes) (Bonded) 2000-Up	1	96042862
144305A	Gasket, 5L40E Extention Housing (Bonded) (7 Holes) 2000-Up	1	96042887
144310A	Gasket, 4L50E/5L40E/5L50E Stator To Case (Bonded) 2000-Up	1	
144311A	O-Ring, 4L50E/5L40E/5L50E Bell Housing To Case 2000-Up	1	
144313A	O-Ring, 5L40E Pump Outer Slide 2000-Up	1	
144320A	Gasket, 5L40E Valve Body Seperator Plate To Lower Channel Plate 2000-Up	1	
144321A	Gasket, 5L40E Valve Body Seperator Plate To Front & Rear Valve Body (Lower) 2000-Up	1	
144322A	Gasket, 5L40E Upper Channel Plate To Lower Channel Plate 2000-Up	1	
144338A	O-Ring, 5L40E Reverse Clutch Drum Piston (Direct Housing) (Inner) 2000-Up	1	
144342A	Lube Seals, 5L40E Valve Body To Overdrive/Intermediate Housing (2 Tubes With Molded Rubber Seals) 2000-Up	2	
144342AA	Lube Seals, 5L40E Valve Body To Center Support (4 Tubes With Molded Rubber Seals) 2000-Up	4	96041778
144380A	O-Ring, 5L40E Input Shaft (Front) 2000-Up	1	

PART #	TECHNICAL MANUALS	QTY	REFERENCE #
144400A	Technical Manual, 5L40E	1	

PART #	ELECTRICAL COMPONENTS	QTY	REFERENCE #
144410C	Switch, 5L40E (Cadillac/BMW) PRNDL (6 Pin) (96020017)	1	96042540
144421A	Solenoid, 5L40E Shift (1-2, 2-3 & 4-5 Shift) (All) 2000-Up	1-3	96022804
144422A	Use 144421A	1	
144428A	Use 84431G or 84431GA	1	
84431G	Solenoid, 5L40E Pressure Control Solenoid # 428 (1.320"OD) 1999-Up	1	
84431GA	Solenoid, 5L40E Pressure Control Solenoid # 428 (.860"OD) 1999-Up	1	
144436A	Use U144438A	1	
144436C	Use U144438C	1	
144437C	Sensor, 5L40E (Cadillac) TFT (Temperature) (2 Pin) 2003-Up	1	
144438A	Sensor, 5L40E (BMW) Output Speed (96022527) 2000-Up (Also Fits #436 The Input Speed Sensor) 2000-Up	1-2	
144438C	Sensor, 5L40E (Cadillac) Output Speed (96020037) 2003-Up (Also Fits # 436 The Input Speed Sensor) 2003-Up	1-2	96041860
144440A	Use 144421A	1	
144446A	Wire Harness, 5L40E (BMW) Internal (20 Pin Case Connector With 7 Two Wire & 1 Six Wire Connectors) 2000-Up	1	
144446C	Wire Harness, 5L40E (Cadillac) Internal (20 Pin Case Connector With 8 Two Wire & 1 Six Wire Connectors) 2003-Up	1	96042847

PART #	HARD PARTS	QTY	REFERENCE #
144520A	Stator, 5L40E (BMW) Aluminum Cast # 095304 (11 Bolt) 2000-Up	1	
144520AA	Stator, 5L40E (BMW) (Aluminum, Cast # 96 022 417)(3 3/8" Long Shaft From Front Of Splines To Aluminum Body)	1	
144520C	Stator, 5L40E (Cadillac) (Aluminum, Ink # 1268-190100) 2003-Up	1	
144520CA	Stator, 5L40E (Cadillac)(3 3/16" Long Shaft From Front Of Splines To Aluminum Body) 2003-Up	1	

PART #	PUMP COMPONENTS	QTY	REFERENCE #
S144507C	Valve, 5L40E TCC Control (For Single Valve Pumps)(Oversized)(Sonnax)(Must Use Tool #T-F-55211-TL22)	1	
T-F-55211-TL22	Reamer Kit For S144507C & S144507CA	1	
S144507CA	Valve Set, 5L40E TCC Control & Enable Valve (For Dual Valve Pumps)(Sonnax)(Must Use Tool # T-F-55211-TL22)	1	
S144507RK	Valve Assembly, 5L40E Reverse Boost((Increased Performance Ratio) 2000-Up (Contains: Valve, Sleeve & Spacer) (Sonnax)	1	

© Whatever It Takes Transmission Parts. Inc.

S144507RAK	Valve Assembly, 5L40E Reverse Boost (OEM Ratio) 2000-Up (Contains: Valve, Sleeve & Spacer) (Sonnax)	1	
74531C	Rotor Kit, 5L40E (13 Vane) (.707" Rotor) 1997-3/04 (This Kit Does Not Have #534 (Outer Slide) or #538 (Rings))	1	
74532C	Rotor, 5L40E (13 Vane) (.7070" To .7075")	1	
64533	Vane, 5L40E (Takes 13)	13	8631280
54534C	Pump Slide, 5L40E (.707") 2000-Up	1	2421481
144535A	Pivot Pin, 5L40E Pump Slide (Spring Snap To Pin) 2000-Up (Can Use 74535B)	1	
144536A	Spring, 5L40E Pump Outer Slide (.645"OD) 2000-Up	1	
54538B	Ring, 5L40E Pump Vane Solid Steel "Hardened"	1	24201144
74539C	Rotor Guide, 5L40E Pump (13 Vane)	1	24205410
54540B	Spring, 5L40E Pump Slide Pivot Pin	1	

PART #	HARD PARTS (Continued)	QTY	REFERENCE #
144546A	Apply Ring, 5L40E Overdrive Clutch (Aluminum, .636" Thick) 2000-Up	1	
144547A	Apply Ring, 5L40E (BMW) 2nd Coast Clutch (Aluminum) (.430" Thick) 1999-Up	1	
144547C	Apply Ring, 5L40E (Cadillac) 2nd Coast Clutch (Aluminum) (.555" Thick) 2003-Up	1	
144550A	Housing, 5L40E Overdrive/Intermediate Clutch (3 Clutch Overdrive & 4 Clutch Intermediate, Internal Tooth Friction) 2000-Up	1	
144550AA	Housing, 5L40E Overdrive/Intermediate Clutch (3 Clutch Overdrive & 3 Clutch Intermediate, Internal Tooth Friction) 2000-Up	1	
144550C	Housing, 5L40E Overdrive/Intermediate Clutch (2 Clutch Overdrive & 3 Clutch Intermediate, Internal Tooth Friction) 2003-Up	1	96042808
144554A	Drum W/Shaft, 5L40E Forward/Coast Clutch (9 1/8" Long Shaft) 2000-Up	1	
144554C	Drum W/Shaft, 5L40E Forward/Coast Clutch (8 15/16" Long Shaft) 2003-Up	1	96042815
144556A	Drum, 5L40E Reverse Clutch (Stamped Steel With Check Ball)(.320" From Top Of Snap Ring Groove To Top Of Drum) 2000-Up	1	96042814
144556AA	Drum, 5L40E Reverse Clutch (Stamped Steel With Check Ball)(.155" From Top Of Snap Ring Groove To Top Of Drum) 2000-Up	1	
14556AB	Drum, 5L40E REverse Clutch (Stamped Steel Without Check Ball)(.155" From Top Of Snap Ring Groove To Top Of Drum) 2000-Up	1	
144559A	Housing, 5L40E (BMW) Coast Clutch (Aluminum, 1.380" Thick) 2000-Up	1	
144559C	Housing, 5L40E (Cadillac) Coast Clutch (Aluminum, 1.265" Thick) 2003-Up	1	
144560A	Piston Kit, 5L40E Overdrive Clutch (Bonded) 2000-Up	1	
144562A	Piston Kit, 5L40E Intermediate Clutch (Bonded) 2000-Up	1	
144563A	Piston Kit, 5L40E (BMW) 2nd Coast Clutch (Bonded) (.270" Thick) 2000-Up	1	
144563C	Piston Kit, 5L40E (Cadillac) 2nd Coast Clutch (Bonded) (.305" Thick) 2003-Up	1	
144565A	Piston Kit, 5L40E Direct Clutch (Bonded With Check Ball) 2000-Up	1	
144567A	Piston Kit, 5L40E (BMW) Low/Reverse Clutch (Bonded)(8 Finger Spring) 2000-Up	1	
144568A	Piston Kit, 5L40E (BMW) 2nd Clutch (5 5/16"OD Bonded Piston) 2000-Up	1	
144568C	Piston Kit, 5L40E (Cadillac) 2nd Clutch (5 1/16"OD Bonded Piston) 2003-Up	1	
144569A	Piston Kit, 5L40E Coast Clutch (Bonded) 2000-Up	1	
144570A	Hub W/Shaft, 5L40E (BMW) Reverse/Overdrive Clutch (36 Teeth Hub)(30 Splines To Sun Gear, 1.495"OD Of Splines) 2000-Up	1	
144570C	Hub W/Shaft, 5L40E (Cadillac) Reverse/Overdrive Clutch (36 Teeth Hub)(31 Splines To Sun Gear, 1.555"OD Of Splines) 2003-Up	1	
144575A	Hub W/Shaft, 5L40E (BMW) Direct Clutch (The Rear Bushing Is Down 1 1/16" From End Of Shaft) 2000-Up	1	
144575C	Hub W/Shaft, 5L40E (Cadillac) Direct Clutch (The Rear Bushing Is Down 3/4" From End Of Shaft) 2003-Up	1	96042700
144577A	Hub, 5L40E Low/Reverse Clutch (With Low Sprag Inner Race) 2000-Up	1	
144579A	Hub, 5L40E (BMW) 2nd Coast Clutch (2.515" Tall) 2000-Up	1	
144579C	Hub, 5L40E (Cadillac) 2nd Coast Clutch (2.575" Tall) 2003-Up	1	
144584A	Planet, 5L40E (BMW) 1 Groove On Small Gears (Housing Is Cast Iron & Stamped Steel) 2000-Up	1	
144584C	Planet, 5L40E (Cadillac) Has No Grooves On Small Gear (Housing Is Stamped Steel) 2003-Up	1	96042817
144594A	Ring Gear, 5L40E (BMW) Planet (106 Teeth Left Angled) 24 Outer Parking Lugs (1 Groove On Parking Lugs) 2000-Up	1	
144594AA	Ring Gear, 5L40E (BMW) Planet (106 Teeth, Left Angled)(24 Outer Parking Lugs)(2 Grooves On Parking Lugs)(1.990" Tall) 2000-Up	1	
144594BA	Ring Gear, 5L40E (BMW) Planet (107 Teeth Right Angled) 36 Outer Lugs (No Groove On OD) 2000-Up	1	
144594BC	Ring Gear, 5L40E (Cadillac) Planet (110 Teeth Right Angled) 36 Outer Lugs (1 Groove On The OD) 2003-Up	1	
144594C	Ring Gear, 5L40E (Cadillac) Planet (114 Teeth Left Angled) 24 Outer Parking Lugs (No Groove On Parking Lugs) 2003-Up	1	

© Whatever It Takes Transmission Parts. Inc.

PART #	HARD PARTS (Continued)	QTY	REFERENCE #
144632A	Center Support, 5L40E (BMW) (6 Teeth, 2nd Coast Steels) 2000-Up	1	
144632AB	Center Support, 5L40E (BMW) (24Teeth, 2nd Coast Clutch Steels) 2000-Up	1	
144632C	Center Support, 5L40E (Cadillac) (36 Teeth, 2nd Coast Steels) 2003-Up	1	96042816

PART #	SPRAGS & ONE WAY CLUTCHES	QTY	REFERENCE #
144652A	Use 144658	1	
144654A	Sprag W/End Washers, 5L40E (BMW) Low (26 Lugs) (The Cage Is 1/2 Plastic & 1/2 Metal) 2000-Up (Can Use 144654C)	1	
144654C	Sprag W/End Washers, 5L40E (Cadillac) Low (26 Lugs) (This Cage Is All Medal) 2003-Up (Can Use 144654A)	1	

PART #	HARD PARTS (Continued)	QTY	REFERENCE #
144656A	Sprag W/End Washers, 5L40E (BMW) 2nd Clutch (28 Lugs) (The Cage Is 1/2 Plastic & 1/2 Metal) 2000-Up (Can Use 144656C)	1	
144656C	Sprag W/End Washers, 5L40E (Cadillac) 2nd Clutch (32 Lugs) (The Cage Is All Metal) 2003-Up (Can Use 144656A)	1	
144658A	Sprag W/End Washers, 5L40E (BMW) Forward (26 Lugs) 2000-Up (Cage Is 1/2 Plastic & 1/2 Metal) Also Fits Intermediate Sprag (Can Use 144658C)	1-2	
144658C	Sprag W/End Washers, 5L40E (Cadillac) Forward (26 Lugs) 2003-Up (Cage Is All Metal) Also Fits Intermediate Sprag (Can Use 144658A)	1-2	
144663A	Outer Race, 5L40E Intermediate Sprag (With 24 Teeth Hub) 2000-Up	1	
144665A	Outer Race, 5L40E Low Sprag (28 Lugs) 2000-Up	1	
144667A	Outer Race W/Hub, 5L40E 2nd Clutch Sprag (With 24 Teeth 2nd Clutch Hub) 2000-Up	1	
144668A	Inner Sprag Race W/Hub, 5L40E Forward Sprag (24 Teeth Hub) 2000-Up	1	
144669A	Outer Race/Hub, 5L40E Forward Sprag (24 Teeth Hub) 2000-Up	1	
144674A	Shaft, 5L40E (BMW) Input Sun Gear (11 1/2" Long) 2000-Up (The Rear Bushing Surface For Bushing #049 Is 1 11/16" Long)	1	
144674C	Shaft, 5L40E (Cadillac) Input Sun Gear (11 1/2" Long) 2003-Up (The Rear Bushing Surface For Bushing #049 Is 1 9/16" Long)	1	
144678A	Output Shaft, 5L40E 2WD (6 3/4" Long) (106 Teeth Ring Gear Hub) Bolt-On Type Yoke With 1 3/16" Long Pilot)(24 Yoke Splines) 2000-Up	1	
144678AA	Output Shaft, 5L40E 2WD (5 9/16" Long)(106 Teeth Ring Gear Hub)(Bolt On Type Yoke, No Pilot)(24 Yoke Splines) 2000-Up	1	
144678AB	Output Shaft, 5L40E 4x4 (4 3/8" LOng)(106 Teeth Ring Gear Hub)(43 Yoke Splines) 2000-Up	1	
144678AC	Output Shaft, 5L40E 2WD (12 3/16" Long)(106 Teeth Ring Gear Hub)(Slip On Type Yoke) (27 Yoke Splines) 2000-Up	1	
144678C	Output Shaft, 5L40E 2WD (6 3/4" Long)(114 Teeth Ring Gear Hub) (Bolt-On Type Yoke, With 1 3/16" Long Pilot)(24 Yoke Splines) 2003-Up	1	96042813
144694A	Retainer, 5L40E Holds Low Sprag To Low/Reverse Clutch Hub (Stepped) (Crimped On) 2000-Up	1	
144694B	Retainer, 5L40E 2nd Clutch Sprag (Tin) (.040" Thick) 2000-Up	1	
144695A	Spacer, 5L40E Intermediate Sprag To Low Sprag (.160" Thick) 2000-Up (1.686"ID & 1.750"OD)	1	
144740C	Valve Body, 5L40E (Cadillac) 5 Switch (Aluminum W/4 Accumulators) 2003-Up	1	96042963

PART #	VALVE BODY COMPONENTS	QTY	REFERENCE #
S144741AK	Valve & Plug Kit, 5L40E Low Pressure Control	1	
T-F-55211-TL17	Reamer, Jig & Guide Pin For S144741AK	1	
S144741CK	Valve & Sleeve Kit, 5L40E TCC Regulator (Contains: Valve, Sleeve, Spring, Solenoid Protector And 2 Retaining Clips) (Sonnax)(Must Use Reamer T-F-55211-TL4)	1	
T-F-55211-TL4	Reamer, Jig & Guide Pin For S144741CK (Sonnax)	1	
A144741FK	Actuator Feed Limit Valve Repair, 5L40E (And Pressure Regulator Valve Repair)(Transgo) (Repairs 3 Transmissions)(Contains: Pressure Valve, Spring & Seat, Limit Valve, 3 Springs And Reamer)(Also With Forward & Coast Clutch Piston Seal Protectors)	1	
A144741FK-R	Refills For A144741FK (Repairs 5 Transmissions)(Less Tools)(Transgo)	1	
A144741FK	Valve & Sleeve Kit, 5L40E AFL (Actuator Feed Limit) (Contains Valve, Sleeve, Spring & Retaining Clip) (Sonnax) (Must Use Reamer # T-F-55211-TL)	1	
T-F-55211-TL	Reamers, Jig & Guide Pin For S144741FK (Sonnax)	1	
S144741PAK	Valve & Sleeve Kit, 5L40E Pressure Regulator (Contains: Valve, Sleeve, & Spring Pin)(Sonnax) (Use Tool # T-55211-TL8)	1	
T-55211-TL8	Reamer, For S144741PAK	1	
S144741SK	Shift Control Valve Kit, 5L40E 3-4, 4-5 & Safety (Contains: 2 Valves & Spring)	1	
T-F-55211-TL14	Reamer, Jig & Guide Pin For S144741SK	1	
S144741UAK	Reverse Lockout Kit, 5L40E (Sonnax)(Contains: Reverse Lockout Valve, Sleeve & Spring) (Must Use T-F-55211-TL)	1	

© Whatever It Takes Transmission Parts. Inc.

PART #	HARD PARTS (Continued)	QTY	REFERENCE #
T-F-55211-TL	Reamers, Jig & Guide Pin For S144741FK & S144741UAK (Sonnax)	1	
144750A	Bell Housing, 5L40E (BMW) 5” Top Bolts (Starter At 11:00) (Cast # 96023586) 2000-Up	1	
144750AK	Bell Housing/Pump Assembly, 5L40E (BMW)(5” Top Bolts)(Starter At 11:00)(Bell Cast # 96023586)(Stator Cast # 095304) 2000-Up	1	
144750AAK	Bell Housing/Pump Assembly, 5L40E (BMW)(5 1/2” Top Bolts)(Starter At 1:00) (Bell Cast # 96021232)(6 5/8” From Front To O-Ring #311 Surface)(Stator Cast # 96 022 417) (3 3/8” Long Shaft From Front Of Splines To Aluminum Body) 2000-Up	1	
144750C	Bell Housing, 5L40E (Cadillac) 5 1/2” Top Bolts (Starter At 1:00) Square At 6:00 (Cast # 96022419) 2003-Up	1	96042812
144750CK	Bell Housing/Pump Assembly, 5L40E (Cadillac)(5 1/2” Top Bolts)(Starter At 1:00)(Square Hole At 6:00)(Bell Cast # 96022419 Or P80-2/8)(Stator Has Ink # 1268-190100) 2003-Up	1	
144750CAK	Bell Housing/Pump Assembly, 5L40E (Cadillac)(5 1/8” Top Bolts)(Starter At 2:30) (Cast # 96024930 By The Seal)(5 1/2” From Front To O-Ring #311 Surface)(Stator Has A 3 3/16” Long Shaft From Front Of Splines To Aluminum Body)(With Hole In Bell At 6:00)(Has Two Threaded Bosses At 3:00 & 10:00) 2003-Up	1	
144750CBK	Bell Housing/Pump Assembly, 5L40E(Cad) 5 1/8” Top Bolts(Starter At 2:30)(Cast # 96024930 By The Seal)(5 1/2” From Front To O-Ring # 311 Surface)(Stator Has A 3 3/8”Long Shaft From Front Of Splines To Aluminum Body)(W/Hole In Bell At 6:00, Has Two Threaded Bosses At 3:00 & 10:00)2003-Up	1	
144750CCK	Bell Housing/Pump Assembly, 5L40E (Cadillac)(5 1/8” Top Bolts)(Starter At 2:30) (Cast # 96025992 By The Seal)(5 1/2” From Front To O-Ring #311 Surface)(Stator Has A 3 3/16” Long Shaft From Front Of Splines To Aluminum Body)(With Hole In Bell At 6:00)(Has No Threaded Bosses) 2003-Up	1	
144750CDK	Bell Housing/Pump Assembly, 5L40E(Cad) (4.4L/4.6L) 5 1/4” Top Bolts (Starter At 2:30)(Cast # 96024256 Is On Outside Of Bell) Stator Has A 3 3/8” Long Shaft From Front Of Splines To Aluminum Body)(With Hole In Bell At 6:00) 2005-07	1	
144750CEK	Bell Housing/Pump Assembly, 5L40E(Cad) (4.4L/4.6L) 5 1/4” Top Bolts (Starter At 12:00)(Cast # 96024256 Is On Outside Of Bell) (Stator Has A 3 3/16”Long Shaft From Front Of Splines To Aluminum Body)(With Hole In Bell At 6:00) 2005-07	1	
144750CFK	Bell Housing/Pump Assembly, 5L40E(Cad) (4.4L/4.6L) 5 1/4” Top Bolts (Starter At 12:00)(Cast # 96024256 Is On Outside Of Bell) (Stator Has A 3 3/8”Long Shaft From Front Of Splines To Aluminum Body)(With Hole In Bell At 6:00) 2005-07	1	
144760A	Case, 5L40E (BMW) Uses A 10 3/8” Linkage Shaft (#991-4) 2000-Up	1	
144760C	Case, 5L40E (Cadillac) Uses A 3 3/4” Linkage Shaft (#991-4) 2003-Up	1	
144765A	Pan, 5L40E (BMW) Bottom (20 Bolt) (1 5/8” At Deep End) 2000-Up	1	
144765C	Pan, 5L40E (Cadillac) Bottom (20 Bolt) (2” At Deep End) 2003-Up	1	96042546
144770A	Extention Housing, 5L40E (BMW) (With 2 Threaded Mounting Holes Below The Rear Seal) 2000-Up	1	
144770C	Extention Housing, 5L40E (Cadillac) (With 2 Slotted Mounting Holes Below The Rear Seal & 2 Threaded Holes Below Gasket Surface)	1	
144776AK	Bolt Set, 5L40E Bell Housing To Case (7 Pieces) 2000-Up (Also Fits Extention Housing To Case)	1	
144778AK	Bolt Set, 5L40E Stator To Bell Housing (11 Pieces) 2000-Up	1	
144779AK	Bolt Set, 5L40E Bottom Pan To Case (20 Pieces) 2000-Up	1	
144782AK	Bolt Set, 5L40E Valve Body To Case (9 Pieces) 2000-Up	1	
144787AK	Bolt Set, 5L40E Front Seal To Bell Housing (2 Pieces) 2000-Up	1	
144798A	Nut, 5L40E Output Shaft Yoke 2000-Up	1	96041805
144841A	Yoke, 5L40E Output Shaft (3 Bolt) (1.770”OD Seal Surface) 2000-Up	1	
144843CA	Bracket, 5L40E (Cadillac) TFT (Temperature Sensor) 2003-Up	1	
144860A	Snap Ring, 5L40E Holds Overdrive/Intermediate Housing In Case 2000-Up (Beveled) .146” Thick (8 3/8”OD With Eyelets)	1	
144861AA	Snap Ring, 5L40E Holds Overdrive Pressure Plate In (Selective) 2000-Up (Also 5L40E Holds Reverse Clutch Pressure Plate In # 892 2000-Up)	1	
144862A	Snap Ring, 5L40E Holds Overdrive Clutch Return Spring In 2000-Up	1	
144863AA	Snap Ring, 5L40E Holds 2nd Coast Clutch Pressure Plate In (Selective) (7 5/16”OD) 2000-Up	1	
144864AA	Use 144873AA	1	
144864CA	Use 144876AA	1	
144865A	Snap Ring, 5L40E Holds 2nd Clutch Spring Retainer In 2000-Up	1	
144871A	Snap Ring, 5L40E Holds Coast Clutch Piston Retainer In 2000-Up	1	
144873AA	Snap Ring, 5L40E Holds Intermediate Clutch Pressure Plate In (Selective) 2000-Up (Also 5L40E Holds 2nd Clutch Pressure Plate In (Selective) # 864) 2000-Up	1	
144874A	Snap Ring, 5L40E Holds Intermediate Piston Housing To The Overdrive & Intermediate Clutch Housing 2000-Up	1	
144876AA	Snap Ring, 5L40E Holds Forward Clutch Pressure Plate In (Selective) 2000-Up (Also 5L40E (Cadillac) Holds 2nd Clutch Pressure Plate In # 864) 2000-Up	1	
144878AA	Snap Ring, 5L40E Holds Direct Clutch Pressure Plate In (Selective) 2000-Up (Also 5L40E Holds Low/Reverse Clutch Pressure Plate In (Selective) # 885) 2000-Up	1-2	

© Whatever It Takes Transmission Parts. Inc.

PART #	HARD PARTS (Continued)	QTY	REFERENCE #
144879A	Snap Ring, 5L40E Holds Direct Clutch Retainer In 2000-Up	1	
144881A	Snap Ring, 5L40E Holds Forward Sprag Inner Race To Shaft 2000-Up	1	
144883A	Snap Ring, 5L40E (BMW) Holds 2nd Coast Clutch Return Spring In 2000-Up	1	
144883C	Use 144878AA	1	
144884A	Snap Ring, 5L40E Holds Bearing #250 To Planet 2000-Up	1	
144885A	Use 144878	1	
144892AA	Use 144861AA	1	
144893A	Snap Ring, 5L40E Holds Low/Reverse Clutch Return Spring In 2000-Up	1	
144894A	Snap Ring, 5L40E Holds Ring Gear To Output Shaft 2000-Up	1	
144895A	Snap Ring, 5L40E Yoke Spacer (.067" Thick) (1.664"OD) 2000-Up	1	
144960A	Piston, 5L40E Overdrive Clutch (Bonded) (.275" Thick)(6.975"OD) 2000-Up	1	
144960AK	Piston Kit, 5L40E (AWD)(Bonded) 2002-10 (Contains 9 Pistons)	1	
144960B	Piston, 5L40E Overdrive Clutch (AWD)(Bonded)(.268"Thick)(6.940"OD) 2000-Up	1	
144960CK	Piston Kit, 5L40E (2WD) (Bonded) 1999-09 (Contains 11 Pistons)	1	
144960DK	Piston Kit, 5L40E (Contains 9 Pistons)(Transtec)	1	
144960EK	Piston Kit, 5L40E 2nd Clutch Set 1999-01 (AWD)	1	
144962A	Piston, 5L40E Intermediate Clutch (Bonded) (.725" Thick) 2000-Up	1	
144962B	Piston Housing, 5L40E Intermediate Clutch (Steel) (24 Outer Lugs) 2000-Up	1	
144963A	Piston, 5L40E (BMW) 2nd Coast Clutch (Bonded) (2.70" Thick) 2000-Up	1	
144963C	Piston, 5L40E (Cadillac) 2nd Coast Clutch (Bonded) (.305" Thick) 2003-Up	1	
144964A	Piston, 5L40E Forward Clutch (Bonded) (5.145"OD) 2000-Up	1	
144965A	Piston, 5L40E Direct Clutch (Bonded With Check Ball) 2000-Up	1	
144966A	Piston/Housing, 5L40E (BMW) Reverse Clutch (Stamped Steel, Bonded) 2000-Up (Also The Direct Clutch Housing, 4 Clutch)	1-2	
144966C	Piston/Housing, 5L40E (Cadillac) Reverse Clutch (Stamped Steel, Bonded) 2003-Up (2.395" Tall) (Also The Direct Clutch Housing, 4 Clutch)	1-2	
144967A	Piston, 5L40E Low/Reverse Clutch (Bonded) 2000-Up	1	
144968A	Piston, 5L40E (BMW) 2nd Clutch (Bonded) (5.065"OD) 1999-01	1	
144968B	Piston, 5L40E 2nd Clutch (All)(BMW/Cadillac)(5.310"OD)(Bonded) 2002-Up	1	
144968C	Piston, 5L40E (Cadillac) 2nd Clutch (Bonded) (5.065"OD) 1999-01	1	
144969A	Piston, 5L40E Coast Clutch (Bonded With Check Ball) (4.775"OD) 2000-Up	1	
144970A	Spring, 5L40E Overdrive Clutch Return (.032" Thick) 2000-Up	1	
144972A	Spring, 5L40E Intermediate Clutch Return (32 Springs) 2000-Up	1	
144973A	Spring, 5L40E (BMW) 2nd Coast Clutch Return (7"OD) 2000-Up	1	
144973C	Spring, 5L40E (Cadillac) 2nd Coast Clutch Return (6 13/16"OD) 2003-Up	1	
144975A	Spring, 5L40E Direct Clutch Return (16 Fingers) (.069") 2000-Up	1	
144977A	Spring, 5L40E (BMW) Low/Reverse Clutch Return (.075" Thick)(8 Fingers) 2000-Up	1	
144978A	Spring, 5L40E (BMW) 2nd Clutch Return (.792" Thick) (3.970"OD) With Built-In Retainer 2000-Up	1	
144978C	Spring, 5L40E (Cadillac) 2nd Clutch Return (.730" Thick) (3.800"OD) (Uses A Separate Tin Retainer #988) 2003-Up	1	
144979A	Springs W/Retainer, 5L40E Coast Clutch Return 2000-Up	1	
144985A	Retainer, 5L40E Direct Clutch Return Spring (4 OD Tabs) 2000-Up	1	
144988C	Retainer, 5L40E (Cadillac) 2nd Clutch Spring (Tin) 2003-Up	1	
144991A-4	Manual Shaft, 5L40E (BMW) (10 3/4" Long) 2000-Up	1	
144991C-2	Spring, 5L40E (Cadillac) Detent (Rooster Comb) (6 1/4") 2003-Up	1	96042712
144991C-3	Rooster Comb, 5L40E (Cadillac) 2003-Up	1	96042819
144991C-4	Manual Shaft, 5L40E (Cadilalc) (3 3/4" Long) 2003-Up	1	96042544
144992C	Shift Lever, 5L40E (Cadilalc) External (3" Long) 2003-Up	1	
144994C	Park Rod Actuator, 5L40E (Cadillac) (9 3/4" Long) 2003-Up	1	
144995A	Park Pawl Assembly, 5L40E (BMW) (5 Pieces) 2000-Up	1	96042820
144995C	Park Pawl Assembly, 5L40E (Cadillac) (5 Pieces) 2003-Up	1	

© Whatever It Takes Transmission Parts. Inc.

Technical Bulletin #847

Transmission: *4L40E, 5L40E*
Subject: *Checkball locations*
Application: *BMW, GM*
Issue Date: *July, 2004*

4L40E, 5L40E

Checkball Locations

Use the following diagram to verify correct checkball location. You can determine whether your unit is a 4L40E or 5L40E by the total number of accumulators on the valve body; a 4L40E has three accumulators, a 5L40E has four.

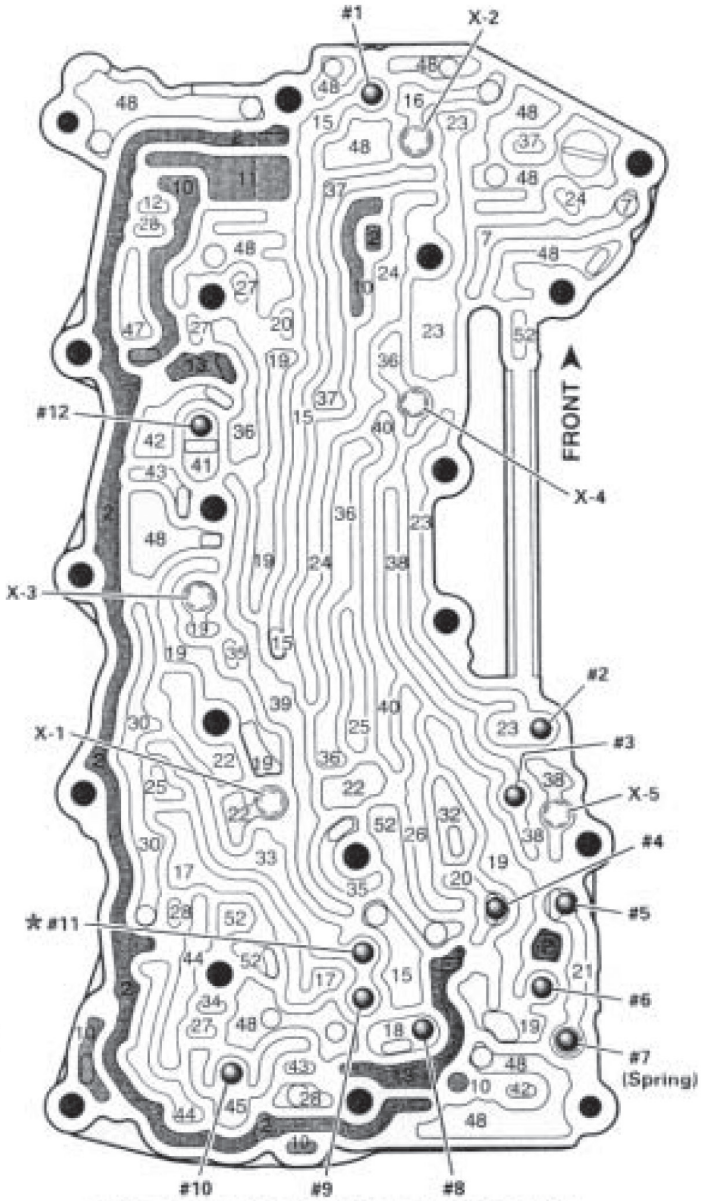

BOTTOM CHANNEL PLATE (304)
(Control Valve Body Side)

X= No Checkball
* = 5L40E Only

Copyright © 2004 ATRA. All Rights Reserved.

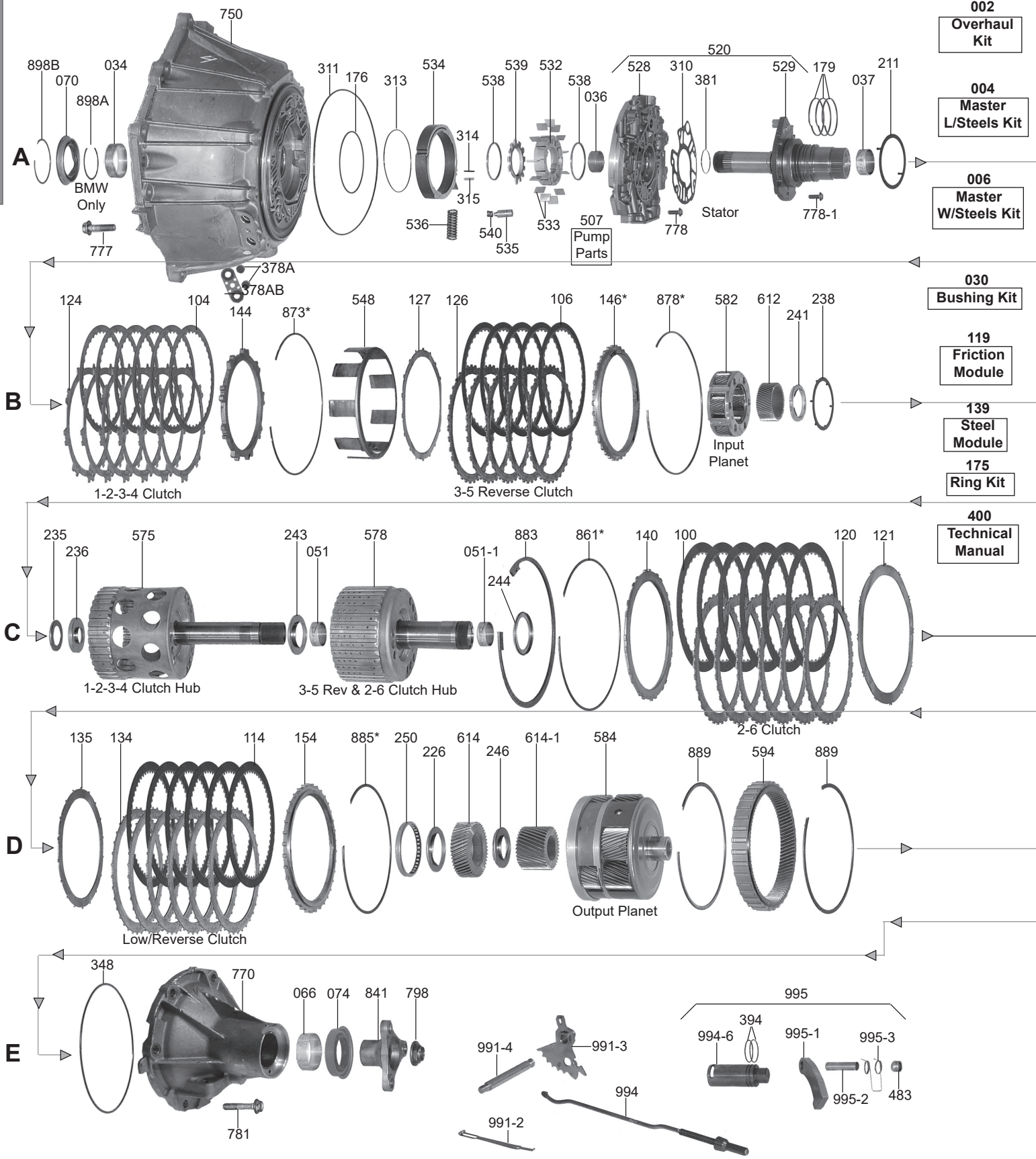

© Whatever It Takes Transmission Parts. Inc.

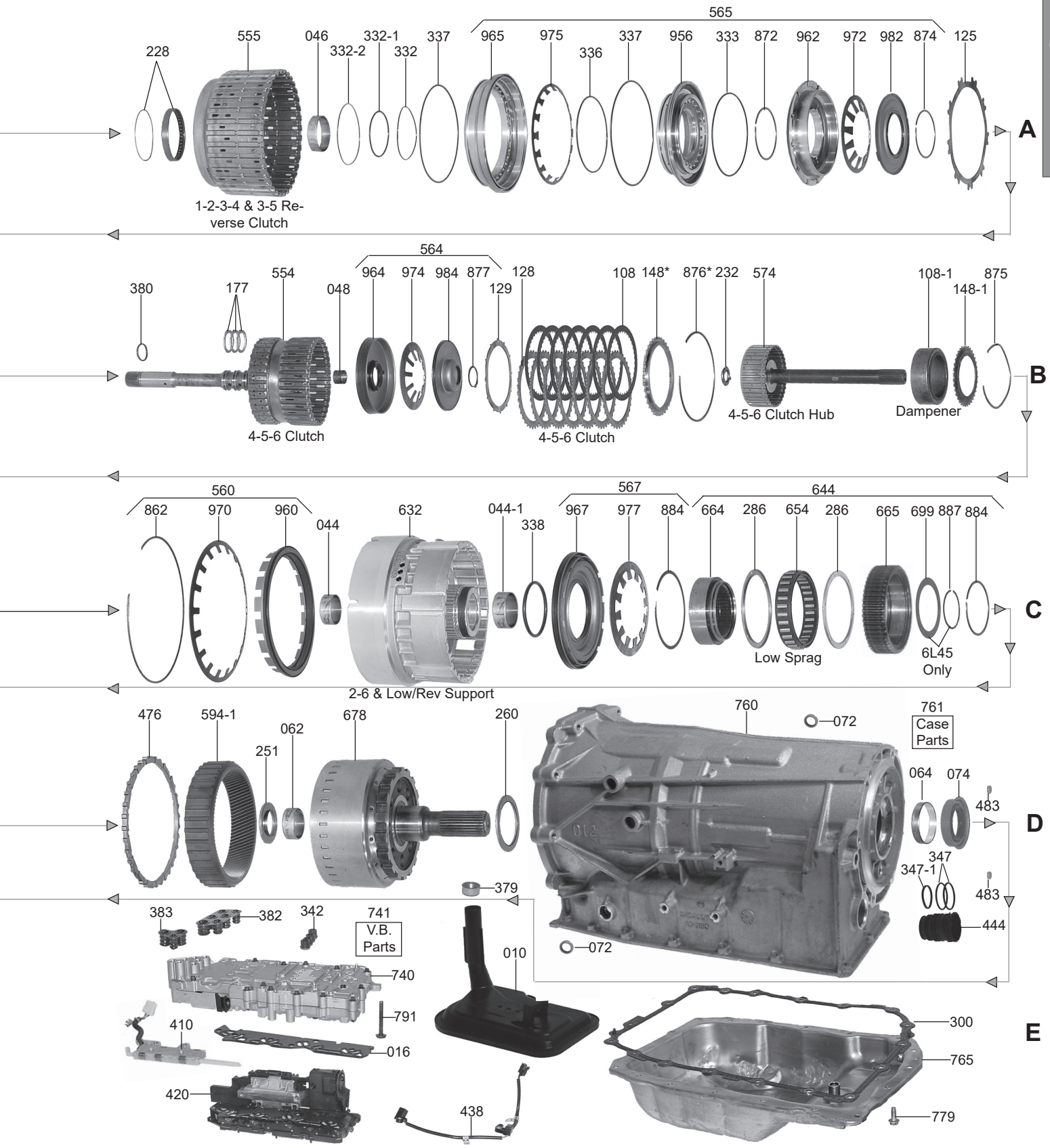

© Whatever It Takes Transmission Parts. Inc.

PART #	OVERHAUL KITS	QTY	REFERENCE #
T45002AW	Overhaul Kit, 6L45/6L50 2007-Up (For Bonded Pistons Sell 45960BK)(Transtek)	1	
T45002CW	Overhaul Kit, 6L80/6L90 2006-Up (For Bonded Pistons Sell 45960CK)(Transtek)	1	
T45002DW	Overhaul Kit, 6L90 2007-Up (For Bonded Pistons Sell 45960CK)(Transtek)	1	
45001C	Sub Kit, 6L80/6L901-2-3-4 & 3-5-Reverse Seal Kit 2006-Up	1	

PART #	MASTER L/STEELS KIT	QTY	REFERENCE #
45004AW	Master L/Steels Kit, 6L45/6L50 2007-Up (For Bonded Pistons Sell 45960BK)	1	
45004CW	Master L/Steels Kit, 6L80 2006-Up (For Bonded Pistons Sell 45960CK)	1	
45004DW	Master L/Steels Kit, 6L90 2007-Up (For Bonded Pistons Sell 45960CK)	1	

PART #	MASTER W/STEELS KIT	QTY	REFERENCE #
45006AW	Master W/Steels Kit, 6L45/6L50 2007-Up (For Bonded Pistons Sell 45960BK)	1	
45006CW	Master W/Steels Kit, 6L80 2006-Up (For Bonded Pistons Sell 45960CK)	1	
45006DW	Master W/Steels Kit, 6L90 2007-Up (For Bonded Pistons Sell 45960CK)	1	

PART #	FILTERS	QTY	REFERENCE #
45010A	Filter, 6L45 (BMW)(1/2 Metal & 1/2 Plastic) 2007-Up	1	
45010B	Filter, 6L50 (GM)(All Plastic) 2007-Up	1	
45010C	Filter, 6L45/6L80/6L90 2006-Up (Has A 1 1/4" Tall Bracket On Top Of Filter)(For Deep Pan)(With Filter On A Flat Surface, From Surface To The Top Of Inlet Tube Is 6 1/4")(Pick-Up Hole On Bottom Is 2 1/4" Long)	1	
45010CA	Filter, 6L80/6L90 2006-Up (Has A 5/8" Tall Bracket On Top Of Filter)(For Shallow Pan)(With Filter Setting On A Flat Surface, From Surface To Top Of Inlet Tube Is 5 3/4")	1	
45010CB	Filter, 6L80 2006-Up (Has A 1 1/4" Tall Bracket On Top Of Filter)(For Deep Pan)(With Filter On A Flat Surface, From Surface To The Top Of Inlet Tube Is 6 1/4")(Pick-Up Hole On Bottom Is 1 3/4" Long)	1	
45010D	Filter, 6L90 2012-Up (Camaro ZL1 With 6.2L)(Has A 1" Tall Bracket On Top Of Filter)(With Filter On Flat Surface, From Surface To The Top Of The Inlet Tube Is 6 1/4")(Pick-Up Hole On Bottom Is 2 5/8" Long)	1	
45016B	Screen, 6L45/6L50/6L80/6L90 Solenoid (Plastic Beaded) 2006-Up	1	

PART #	BUSHINGS	QTY	REFERENCE #
45030A	Bushing Kit, 6L45/6L50 2007-Up	1	
45030C	Bushing Kit, 6L80 2006-Up	1	
45030D	Bushing Kit, 6L90 2007-Up	1	
45034B	Bushing, 6L45/6L50/6L80/6L90 Bell Housing (Pump Body) (Teflon Coated) (.785"Wide)(1.995"OD)(1.850"ID) 2006-Up	1	
45034BD	Bushing, 6L50/6L80/6L90 Bell Housing (Pump Body)(Enhanced With CT-101 Dry Film Lubricant)(W/Indents For Better Oil Retention)	1	
45036B	Bushing, 6L45/6L50 Stator (Front) (.495"Wide)(1.033"OD)(.905"ID) (Babbit) 2007-Up	1	
45036C	Bushing, 6L80/6L90 Stator (Front) (.540"Wide)(1.245"OD)(1.115"ID)(Babbit)2006-Up	1	
45037B	Bushing, 6L45/6L50 Stator (Rear) (1.200"ID) 2007-Up	1	
45037C	Bushing, 6L80/6L90 Stator (Rear) (1.480"ID) 2006-Up	1	
45044B	Bushing, 6L45/6L50/6L80/6L90 2-6 & Low/Reverse Support (Front) (.415"Wide)(1.025"OD)(1.890"ID)(Babbit) 2006-Up	1	
45044B-1	Bushing, 6L45/6L50 2-6 & Low/Reverse Support (Rear) (.450"Wide)(1.890"OD)(1.750"ID) (Babbit) 2007-Up	1	
45044C-1	Bushing, 6L80/6L90 2-6 & Low/Reverse Support (Rear) (.520"Wide)(2.030"OD)(1.895"ID)(Babbit) 2006-Up	1	
45046B	Bushing, 6L45/6L50/6L80/6L90 1-2-3-4 & 3-5 Reverse Drum (Rear) (.505"Wide)(2.190"ID) (Babbit) 2006-Up	1	
45048B	Bushing, 6L45/6L50/6L80/6L90 4-5-6 Clutch Drum (Rear) (.690"ID) (Babbit) 2006-Up	1	
45051B	Bushing, 6L45/6L50/5L90 3-5 Reverse & 2-6 Clutch Hub (Front) (1.475"ID) (W/Oil Pockets) (Babbit) 2007-Up	1	
45051B-1	Bushing, 6L45/6L50 3-5 Reverse & 2-6 Clutch Hub (Rear) (1.358"ID) (W/2 Grooves) (Babbit) 2007-Up	1	
45051C	Bushing, 6L80 3-5 Reverse & 2-6 Clutch Hub (Front) (1.475"ID) (Smooth) (Babbit) 2006-Up	1	
45051C-1	Bushing, 6L80/6L90 3-5 Reverse & 2-6 Clutch Hub (Rear) (1.465"ID) (W/2 Grooves) (Babbit) 2006-Up	1	
45051D	Bushing, 6L90 3-5 Reverse & 2-6 Clutch Hub (Front)(Coated With Indents) 2006-Up	1	
45062B	Bushing, 6L45/6L50 Output Shaft (1.200"ID) (Babbit) 2007-Up	1	
45062C	Bushing, 6L80/6L90 Output Shaft (1.430"ID) (Babbit) 2006-Up	1	
45064B	Use 45263B	1	
45064C	Bushing, 6L80/6L90 Case (Rear) (2.200"OD)(2.075"ID) (Teflon Coated) (Split) 2006-Up	1	

© Whatever It Takes Transmission Parts. Inc.

45066B ..... Use 45271B ..... 1 .....
45066C ..... Bushing, 6L80 Extension Housing (2.024"OD)(2.020"ID) 2006-Up ..... 1 .....
45066D ..... Bushing, 6L90 Extension Housing (2WD) (2.340"OD)(2.338"ID) 2007-Up ..... 1 .....

PART #	METAL CLAD SEALS	QTY	REFERENCE #

45070B ..... Seal, 6L45/6L50/6L80/6L90 Front (.380"Thk, 2.995"OD) 2006-Up ..... 1 .....
44072 ..... Seal, 6L45/6L50/6L80/6L90 Manual Lever 2006-Up ..... 1 .....
45072AA ..... Seal, 6L45/6L50 Linkage (Passanger Side)(Bonded)(1.355"OD) ..... 1 .....
45074B ..... Seal, 6L45/6L50 2WD Extension Housing (2.430"OD)(1.730"ID) 2007-Up (Also Fits 6L50 4X4 Rear
..... Case Seal 2007-Up) ..... 1 .....
45074C ..... Seal, 6L80 2WD Extension Housing (2.690"OD) 2006-Up (Also Fits 6L80 4X4 Rear Case Seal
..... 2006-Up) ..... 1 .....
45074D ..... Seal, 6L80/6L90 4WD Extension Housing (3.005"OD)(2.000"ID) 2007-Up ..... 1 .....
M520074D ..... Seal, 6L80E Express Van (Rear W/Boot)(3.020"OD) ..... 1 .....

PART #	FRICTIONS	QTY	REFERENCE #

45100B ..... Friction, 6L45/6L50 2-6 Clutch (.098") (36 Internal Teeth) (7 1/4"OD) (1 Sided Friction) 2007-Up . 5 .....
45100C ..... Friction, 6L80 2-6 Clutch (.071") (36 Teeth) (7 3/4"OD) (Waffle) 2006-Up ..... 5 .....
45100CS1 ..... Friction, 6L80 2-6 Clutch (.074")(36 Teeth)(7.874"OD)(Waffle)(Stage 1) 2006-Up ..... 5 .....
45100D ..... Friction, 6L90 2-6 Clutch (.071") (36 Teeth) (7 3/4"OD) (Grooved) 2007-Up (Use 45100C) ..... 6 .....
45104B ..... Friction, 6L45/6L50 1-2-3-4 Clutch (.065") (36 Teeth) (6 3/4"OD) 2007-Up ..... 5 .....
45104C ..... Friction, 6L80/6L90 1-2-3-4 Clutch (.065") (36 Teeth) (7 1/4"OD) 2006-Up (6L80 Takes 5,
..... 6L90 Takes 6) ..... 5-6 .....
45104CS1 ..... Friction, 6L80/6L90 1-2-3-4 Clutch (.065")(36 Teeth)(7 1/4"OD)(Stage 1) 2006-Up ..... 5-6 .....
45106B ..... Friction, 6L45/6L50 3-5 Reverse Clutch (.073") (36 Teeth) (7 1/8"OD) 2007-Up ..... 4 .....
45106C ..... Friction, 6L80/6L90 3-5 Reverse Clutch (.073") (36 Teeth) (7 11/16"OD) 2006-Up
..... (6L80 Takes 4, 6L90 Takes 5) ..... 4-5 .....
45106CS1 ..... Friction, 6L80/6L90 3-5 Reverse Clutch (.073")(36 Teeth)(7 11/16"OD)(Stage 1) 2006-Up ..... 4-5 .....
45108B ..... Friction, 6L45/6L50 4-5-6 Clutch (.079") (36 Internal Teeth) (1 Sided) (4.945"OD) 2007-Up ..... 5 .....
45108B-1 ..... Dampener Friction, 6L50 4-5-6 Clutch (1.020"Thick, 3.696"OD, 2.835"ID)(Cast # 24230475)
..... 2007-Up ..... 1 .....
45108C ..... Friction, 6L80/6L90 4-5-6 Clutch (.063") (36 Teeth) (5.095"OD) 2006-Up (6L80 Takes 6,
..... 6L90 Takes 7) ..... 6-7 .....
45108CS1 ..... Friction, 6L80/6L90 4-5-6 Clutch (.063")(36 Teeth)(5.095"OD)(Stage 1) 2006-Up ..... 6-7 .....
45108C-1 ..... Dampener Friction, 6L80 4-5-6 Clutch (.885"Thick, 3.815"OD, 2.835"ID) (Cast # 24230368)
..... 2006-Up ..... 1 .....
45108D-1 ..... Dampener Friction, 6L90 4-5-6 Clutch (1.225"Thk)(3.815"OD)(2.835"ID)(Cast # 24230481)
..... 2006-Up ..... 1 .....
45114B ..... Friction, 6L50 Low/Reverse Clutch (.064") (54 Teeth) (7"OD) (.360"Wide Friction Lining)
..... 2007-Up ..... 6 .....
45114BA ..... Friction, 6L45E Low/Reverse Clutch (.064")(44 Teeth)(7"OD) 2007-Up ..... 6 .....
45114C ..... Friction, 6L80/6L90 Low/Reverse Clutch (.064") (54 Teeth) (7"OD) (.460"Wide Friction Lining)
..... 2006-Up (6L80 Takes 5, 6L90 Takes 6) ..... 5-6 .....
45114CS1 ..... Friction, 6L80/6L90 Low/Reverse Clutch (.064")(54 Teeth)(7"OD)(.460" WideFriction Lining)
..... (Stage 1) 2006-Up ..... 5-6 .....
45114CA ..... Friction, 6L80/6L90 Low/Reverse Clutch 2006-Up ..... 5-6 .....
45119A ..... Friction Module, 6L45/6L50 2007-Up ..... 1 .....
45119B ..... Friction Module, 6L50 2007-Up ..... 1 .....
45119C ..... Friction Module, 6L80 2006-Up ..... 1 .....
45119CS1 ..... Friction Module, 6L80 (Stage 1) 2006-Up ..... 1 .....
45119D ..... Friction Module, 6L90 2007-Up ..... 1 .....
45119DS1 ..... Friction Module, 6L90 (Stage 1) 2007-Up ..... 1 .....

PART #	STEELS	QTY	REFERENCE #

45120B ..... Friction, 6L45/6L50 2-6 Clutch (.084") (24 External Teeth) (6 3/8"ID) (1 Sided Friction) 2007-Up .. 5 .....
45120C ..... Steel, 6L80/6L90 2-6 Clutch (.087") (36 Teeth) (6 5/8"ID) 2006-Up (6L80 Takes 5,
..... 6L90 Takes 6) ..... 5-6 .....
45121B ..... Steel, 6L45/6L50 2-6 Clutch (.060") (12 Teeth) (6 3/8"ID) (Waved) 2007-Up ..... 1 .....
45121C ..... Steel, 6L80/6L90 2-6 Clutch (.060") (12 Teeth) (6 5/8"ID) (Waved) 2006-Up ..... 1 .....
45124B ..... Steel, 6L45/6L50 1-2-3-4 Clutch (.068")(9 Teeth)(6 1/8"ID) 2007-Up ..... 5 .....
45124C ..... Steel, 6L80/6L90 1-2-3-4 Clutch (.068")(9 Teeth)(6 3/8"ID) 2006-Up (6L80 Takes 5,
..... 6L90 Takes 6) ..... 5-6 .....
45124CHP ..... Steel, 6L80/6L90 1-2-3-4 Clutch (.068")(9 Teeth)(6 3/8"ID) 2006-Up (Kolene) 5-6
45125B ..... Steel, 6L45/6L50 1-2-3-4 Clutch (.067")(9 Teeth) (6 1/8"ID) (Wavy) 2007-Up ..... 1 .....
45125C ..... Steel, 6L80 1-2-3-4 Clutch (.053") (9 Teeth) (6 3/8"ID) (Wavy) 2006-Up ..... 1 .....
45125D ..... Steel, 6L90 1-2-3-4 Clutch (.053") (9 Wide & 18 Narrow Teeth) (6 3/8"ID) (Wavy) 2007-Up
..... (Can Use 45125C) ..... 1 .....

© Whatever It Takes Transmission Parts. Inc.

PART #	STEELS (Continued)	QTY	REFERENCE #
45126B	Steel, 6L45/6L50 3-5 Reverse Clutch (.098") (36 Teeth) (6 3/8"ID) 2007-Up	4	
45126C	Steel, 6L80/6L90 3-5 Reverse Clutch (.106") (36 Teeth) (6 3/4"ID) 2006-Up (6L80 Takes 4, 6L90 Takes 5)	4-5	
45127A	Steel, 6L45 3-5 Reverse Clutch (.065")(6 Teeth)(6 3/8"ID)(Wavy) 2007-Up	1	
45127B	Steel, 6L50 3-5 Reverse Clutch (.054")(6 Teeth)(6 3/8"ID)(Wavy) 2007-Up	1	
45127C	Steel, 6L80 3-5 Reverse Clutch (.054")(12 Teeth)(6 3/4"ID)(Wavy) 2006-Up	1	
45127D	Steel, 6L90 3-5 Reverse Clutch (.054")(18 Teeth)(6 3/4"ID)(Wavy) 2007-Up	1	
	(Can Use 45127C)	1	
45128B	Friction, 6L45/6L50 4-5-6 Clutch (.079") (36 External Teeth) (1 Sided) (4.130"ID) 2007-Up	5	
45128C	Steel, 6L80/6L90 4-5-6 Clutch (.087") (36 Teeth) (4.255"ID) 2006-Up (6L80 Takes 6, 6L90 Takes 7)	6-7	
45129B	Steel, 6L45/6L50 4-5-6 Clutch (.075") (12 Teeth) (4.135"ID) (Wavy) 2007-Up	1	
45129C	Steel, 6L80/6L90 4-5-6 Clutch (.063")(12 Teeth) (4.250"ID) (Wavy) 2006-Up	1	
45134B	Steel, 6L45/6L50 Low/Rev Clutch (.068")(24 Teeth) (6 3/16"ID) 2007-Up	6	
45134C	Steel, 6L80/6L90 Low/Reverse Clutch (.068") (36 Teeth) (6"ID) 2006-Up (6L80 Takes 5, 6L90 Takes 6)	5-6	
45135B	Steel, 6L45/6L50 Low/Reverse Clutch (.068") (8 Teeth) (6 3/16"ID) (Waved) 2007-Up	1	
45135C	Steel, 6L80/6L90 Low/Reverse Clutch (.085") (18 Teeth) (6"ID) (Waved) 2006-Up	1	
45139A	Steel Module, 6L45/6L50 2007-Up	1	
45139B	Steel Module, 6F35 2009-Up	1	
45139C	Steel Module, 6L80 2006-Up	1	
45139CK	Steel Module, 6L80 2006-Up (Kolene)	1	

PART #	PRESSURE PLATES	QTY	REFERENCE #
45140B	Pressure Plate, 6L45/6L50 2-6 Clutch (.195") (24 Teeth) (6 3/8"ID) (Stepped) 2007-Up	1	
45140C	Pressure Plate, 6L80/6L90 2-6 Clutch (.120") (24 Teeth) (6 5/8"OD) (Stepped) 2006-Up	1	
45144B	Pressure Plate, 6L45/6L50 1-2-3-4 Clutch (Top) (.280") (9 Teeth) (6 1/8"ID) 2007-Up	1	
45144C	Pressure Plate, 6L80/6L90 1-2-3-4 Clutch (.315") (9 Teeth) (6 3/8"ID) 2006-Up	1	
45146B	Pressure Plate, 6L45/6L50 3-5 Reverse Clutch (.323") (36 Teeth) (6 3/8"ID) 2007-Up	1	
45146C	Pressure Plate, 6L80/6L90 3-5 Reverse Clutch (.430") (36 Teeth) (6 3/4"ID) 2006-Up	1	
45148B	Pressure Plate, 6L45/6L50 4-5-6 Clutch (.198") (Stepped) (36 Teeth)(4.133"ID) 2007-Up	1	
45148B-1	Pressure Plate/Retainer, 6L50 4-5-6 Clutch (.150"Thick) (36 Teeth)(2.605"ID) 2007-Up	1	
45148C	Pressure Plate, 6L80/6L90 4-5-6 Clutch (.157") (Stepped) (36 Teeth)(4.255"ID) 2006-Up	1	
45148C-1	Pressure Plate/Retainer, 6L80/6L90 4-5-6 Clutch (.069"Thick) (36 Teeth)(2.605"ID) 2006-Up	1	
45154B	Pressure Plate, 6L45/6L50 Low/Reverse Clutch (.312") (24 Teeth) (6 3/16"ID) 2007-Up	1	
45154C	Pressure Plate, 6L80/6L90 Low/Reverse Clutch (.230") (36 Teeth) (6"ID) (Stepped) 2006-Up	1	

PART #	VALVE BODY KITS	QTY	REFERENCE #
45165A	Shift Kit, 6L45/6L50/6L80/6L90 2006-Up (Transgo)	1	

PART #	SEALING RINGS	QTY	REFERENCE #
45175AT	Ring Kit, 6L45/6L50 2007-Up	1	
45175CT	Ring Kit, 6L80/6L90 2006-08	1	
45176BT	Ring, 6L45/6L50/6L80/6L90 Outer Slide (.074"Thick, 4.240"OD) (Teflon) 2006-Up	1	
45177BT	Ring, 6L45/6L50 4-5-6 Clutch Drum Input Shaft (1.155"OD) (Solid) (Teflon) 2007-Up	3	
45177CT	Ring, 6L80/6L90 4-5-6 Clutch Drum Input Shaft (1.385"OD) (Solid) (Teflon) 2006-Up	3	
45179BV	Ring, 6L45/6L50 Stator (.104"Thick)(With 2 Inside Diameter Ears)(Vespel) 2009-Up	3	
45179CAVK	Ring Set, 6L80/6L90 Stator (Updated,W/Anti-Rotational Tab)(W/Back-Up O-Rings) 2009-Up	1	
45179CV	Ring, 6L80/6L90 Stator (.096"Thick, No Ears) (Vespel) (1 Piece Type Ring) 2006-08	3	

PART #	WASHERS & BEARINGS	QTY	REFERENCE #
45211B	Washer, 6L45/6L50/6L80/6L90 Stator To 1-2-3-4 & 3-5 Reverse Clutch Drum (.060"Thick)(3.855"OD) (3.270"ID) (W/2 Split Tabs) (Plastic) 2006-Up	1	
45226B	Bearing W/Races, 6L45/6L50 2-6 & Low/Reverse Support To Front Output Planet Sun Gear (.141"Thick, 2.520"OD, 1.740"ID) 2007-Up	1	
45226C	Bearing W/Races, 6L80/6L90 2-6 & Low/Reverse Support To Front Output Planet Sun Gear (.141"Thick, 2.735"OD, 1.880"ID) 2006-Up	1	
45228B	Caged Needle Bearing, 6L45/6L50/6L80/6L90 1-2-3-4 & 3-5 Reverse Drum (Front) (42 Needles, 3.405"OD, 3.250"ID) 2006-Up	1	
45232B	Bearing W/Races, 6L45/6L50/6L80/6L90 4-5-6 Clutch Drum To Hub (.150"Thick)(2.51"OD)(1.76"ID) 2006-Up	1	
45235B	Race, 6L45/6L50/6L80/6L90 4-5-6 Clutch Hub To 1-2-3-4 Clutch Hub (Cupped) (2.265"OD, 1.385"ID) 2006-Up	1	

© Whatever It Takes Transmission Parts. Inc.

45236B ..... Bearing W/Race, 6L45/6L50/6L80/6L90 4-5-6 Clutch Hub To 1-2-3-4 Clutch Hub (2.465”OD, 1.100”ID) 2006-Up 1
45238B ..... Washer, 6L45/6L50/6L80 Input Planet To 4-5-6 Clutch Drum (.062”Thick, 3.540”OD, 2.985”ID) ..... (4 Tab, 2 Tabs Are Split) 2006-Up 1
45238D ..... Washer, 6L90 Input Planet To 4-5-6 Clutch Drum (.062”Thick, 3.540”OD, 2.985”ID) (6 Tab, ... 2 Tabs Are Split) 2007-Up 1
45241B ..... Bearing W/Races, 6L45/6L50/6L80/6L90 Input Sun Gear To 4-5-6 Clutch Drum (.190”Thick, 2.592”OD, ... 1.860”ID) 2006-Up 1
45243B ..... Bearing W/Races, 6L45/6L50/6L80/6L90 1-2-3-4 Clutch Hub To 3-5 Reverse Clutch Hub (.320”Thick, ... 2.505”OD, 1.545”ID) 2006-Up 1
45244B ..... Bearing W/Races, 6L45/6L50/6L80/6L90 3-5 Reverse & 2-6 Clutch Hub To 2-6 & Low/Reverse ..... Support (.250”Thick, 2.830”OD, 2.050”ID) 2006-Up 1
45246B ..... Bearing W/Races, 6L45/6L50 Front Output Sun Gear To Rear Output Sun Gear (.160”Thick, 2.185”OD, ... 1.305”ID) 2007-Up 1
45246C ..... Bearing W/Races, 6L80/6L90 Front Output Sun Gear To Rear Output Sun Gear (.220”Thick, ... 2.480”OD, 1.430”ID) 2006-Up 1
45250B ..... Caged Needle Brg, 6L45/6L50 Output Planet (Front) (.335”Thick, 2.680”OD) (32 Needles) ..... (Cast # 24225777) 2007-Up 1
45250C ..... Caged Needle Bearing, 6L80/6L90 Output Planet (Front) (.335”Thick, 3.200”OD) (37 Needles) ..... (Cast # 24224853) 2006-Up 1
45251B ..... Bearing W/Races, 6L45/6L50 Output Planet To Output Shaft (.197”Thick, 2.220”OD, 1.265”ID) 2007-Up 1
45251C ..... Bearing W/Races, 6L80/6L90 Output Planet To Output Shaft (.197”Thick, 2.490”OD, 1.515”ID) 2006-Up 1
45260B ..... Bearing W/Races, 6L45/6L50/6L80/6L90 Output Shaft To Case (.152”Thick, 3.365”OD, 2.500”ID) 2006-Up 1
45263B ..... Caged Needle Bearing, 6L45/6L50 Case To Output Shaft (.810”Wide, 2.040”OD) (Cast # DB-603-814 ..... Torrington) 2007-Up 1
45271B ..... Caged Needle Bearing, 6L45/6L50 Extension Housing (2WD W/Bolt-On Yoke) (43 Needles) (2.050”OD) ..... (Cast # FC69886 INA) 2007-Up 1

PART #	GASKETS & RUBBER COMPONENTS	QTY	REFERENCE #

45300BW ..... Gasket, 6L45/6L50 Pan (17 Bolt) (16 3/4”Long) (Bonded Rubber) 2007-Up 1
45300CW ..... Gasket, 6L80 Pan (18 Bolt) (16 3/4”Long) (Bonded Rubber) 2006-Up 1
45300DW ..... Gasket, 6L90 Pan (18 Bolt) (18 1/8”Long) (Bonded Rubber) 2007-Up 1
45310C ..... Gasket, 6L50/6L80/6L90 Pump To Stator 2006-Up 1
45311B ..... O-Ring, 6L456L50 Bell Housing (Pump Body) To Case (9 1/2”OD) 2007-Up 1
45311C ..... O-Ring, 6L80/6L90 Bell Housing (Pump Body) To Case (10 1/2”OD) 2006-Up 1
45313B ..... O-Ring, 6L45/6L50/6L80/6L90 Outer Slide (.095”Thick, 4.240”OD) 2006-Up 1
54314B ..... Seal, 6L45/6L50/6L80/6L90 Pump Slide (Rubber) 2006-Up 1
54315B ..... Seal, 6L45/6L50/6L80/6L90 Pump Slide (Teflon) 2006-Up 1
45320B ..... Gasket, 6L45/6L50 Valve Body (Bonded To Spacer Plate) 2007-Up 1
45320C ..... Gasket, 6L80/6L90 Valve Body (Bonded To Valve Body Plate) 2006-Up 1
45332A ..... O-Ring, 6L45/6L50/6L80/6L90 Drum (Inner)(Rear)(3”OD) 1
45332-1A ..... O-Ring, 6L45/6L50/6L80/6L90 Drum (Center)(Inner)(3 1/8”OD) 1
45332-2A ..... O-Ring, 6L45/6L50/6L80/6L90 Drum (Inner)(Front)(4 1/16”OD) 1
45333A ..... D-Ring, 6L45/6L50 Piston Housing To Piston (Outer)(5 1/4”OD) 1
45333C ..... D-Ring, 6L80/6L90 Piston Housing To Piston (Outer)(5 1/4”OD) 1
45336A ..... O-Ring, 6L45/6L50 Piston Housing (Inner)(5 1/8”OD) 1
45336C ..... O-Ring, 6L80/6L90 Piston Housing (Inner)(5 5/8”OD) 1
45337A ..... D-Ring, 6L45/6L50 Piston To Piston Housing (Outer)(6 5/8”OD) 2
45337C ..... D-Ring, 6L80/6L90 Piston To Piston Housing (Outer)(7 1/16”OD) 2
45338A ..... O-Ring, 6L45 Support (Inner)(.150”Thick)(2 5/8”OD) 1
45338B ..... O-Ring, 6L50 Support (Inner)(.150”Thick)(3 3/4”OD) 1
45338C ..... O-Ring, 6L80/6L90 Support (Inner)(3 1/8”OD)(.220”Thick) 1
S45342-2B ..... Seal Kit, 6L45/6L50/6L80/6L90 Center Support (Includes: 4 Metal Center Support Seal Inserts, ... 4 Valve Body Seal Inserts, 2 Short Springs, 2 Medium Springs, & 2 Tall Springs)(Sonnax) 1
45342B ..... Boot Seal, 6L45/6L50/6L80/6L90 Valve Body To 2-6 & Low/Reverse Support (4 Inline Rubber Boots) 2006-Up 1
45347A ..... O-Ring, 6L45/6L50/6L80/6L90 Case Connector (Large) 2
45347-1A ..... O-Ring, 6L45/6L50/6L80/6L90 Case Connector (Small)(Ribbed) 1
45348B ..... Lathe Cut Seal, 6L45/6L50 Extension Housing To Case (5.695”OD) 2007-Up 1
45348C ..... Lathe Cut Seal, 6L80/6L90 Extension Housing To Case (6 9/16”OD) 2006-Up 1
45371C ..... Boot, 6L80/6L90 Filler Tube 2006-Up 1
S45376AK ..... Pressure Switch Kit, 6L45/6L50/6L80/6L90 Rebuild Kit (Contains: 5 Discs, 5 Seals, Laminate ..... Installation Tool, Seal Installer, Piston, Seal Plunger)(Sonnax) 1
S45376AK-1 ..... Pressure Switch Fix, 6L45/6L50/6L80/6L90 Rebuild Master Pack (Contains: 40 Discs, 40 Seals, ... Laminate Installation Tool, Seal Installer, Piston, Seal Plunger)(Sonnax) 1

© Whatever It Takes Transmission Parts. Inc.

PART #	GASKETS & RUBBER COMPONENTS (Continued)	QTY	REFERENCE #
S45376A-RK	Pressure Switch Refill Kit, 6L45/6L50/6L80/6L90 Refills For S45376AK And S45376AK-1 (Contains: 5 Discs & 5 Seals)(Sonnax)	1	
45378A	Metal Clad Seal, 6L50/80/90 Cooler Line 2007-Up	2	
45378AB	Seal/Washer, Cooler Line 6L45/6L50/6L80/6L90 2007-Up	1	
64380	O-Ring, 6L45/6L50 Input Shaft 2007-Up	1	
34380	O-Ring, 6L80/6L90 Input Shaft 2006-Up	1	
45381C	O-Ring, 6L80/6L90 Pump Stator To Pump 2006-Up	1	
45382A	Boot Set, 6L45/6L50/6L80/6L90 Valve Body To Case (6 On A Plate)	1	
45383A	Boot Set, 6L45/6L50/6L80/6L90 3 Tube VB To Case	1	
45394A	O-Ring, 6L45/6L50/6L80/6L90 Park Pawl Sleeve To Case	2	

PART #	TECHNICAL MANUALS	QTY	REFERENCE #
45400B	Technical Manual, 6L80 (ATSG)	1	

PART #	ELECTRICAL COMPONENTS	QTY	REFERENCE #
45410B	Neutral Safety Switch, 6L45/6L50/6L80/6L90 (6 Wire Green Connector) (6” Long Wire Harness) 2006-Up	1	
45420B	Solenoid Assembly, 6L45/6L50/6L80/6L90 (8 Enclosed Solenoids, 16 Pin Connector) 2006-Up (THESE ITEMS NEED TO BE VERIFIED BY THE VIN NUMBER!!)	1	
45420BA	Solenoid Assy, 6L50/6L80/6L90 (8 Enclosed Solenoids, 16 Pin Connector)2006-Up (These Must Be Flashed) (THESE ITEMS NEED TO BE VERIFIED BY THE VIN NUMBER!!)	1	
45420BB	Solenoid Assy, 6L50/6L80/6L90 (8 Enclosed Solenoids, 16 Pin Connector)2006-Up (These Must Be Flashed) (THESE ITEMS NEED TO BE VERIFIED BY THE VIN NUMBER!!)	1	
45420BC	Solenoid Assy, 6L50/6L80/6L90 (8 Enclosed Solenoids, 16 Pin Connector)2006-Up (These Must Be Flashed) (THESE ITEMS NEED TO BE VERIFIED BY THE VIN NUMBER!!)	1	
45420BD	Solenoid Assy, 6L50/6L80/6L90 (8 Enclosed Solenoids, 16 Pin Connector)2006-Up (These Must Be Flashed) (THESE ITEMS NEED TO BE VERIFIED BY THE VIN NUMBER!!)	1	
45420BE	Solenoid Assembly, 6L50/6L80/6L90 (8 Enclosed Solenoids, 16 Pin Connector) 2010-13 (These Must Be Flashed)	1	
45438B	Sensor, 6L45/6L50/6L80/6L90 Input & Output Speed (W/3 Wire Connector)(Non Stepped Output Shaft) 2006-11	1	
45438BA	Sensor, 6L50/6L80/6L90 Input & Output Speed (Stepped Output Shaft) 2012-Up	1	
45444B	Case Connector, 6L45/6L50/6L80/6L90 (Black Plastic)(1.920” Long)(Uses 3 O-Rings) 2005-Up	1	
45445BK	Repair Kit, 6L80/6L90 External Wire Harness (16 Pin Connector) 2007-16 (Includes 12” Color Coded Wire & Heat Shrink Butt Connectors)	1	

PART #	MISCELLANEOUS COMPONENTS	QTY	REFERENCE #
45476B	Spacer, 6L50 Output Planet Ring Gear (.275”Thick, 5 5/16”ID) 2007-Up	1	
45476C	Spacer, 6L80/6L90 Output Planet Ring Gear (.250”Thick, 6 1/2”ID) 2006-Up	1	
45483A	Cup Plug, 6L45/6L50 Case (Rear)(Bonded)(.595”/.830”OD)(Top Hat) 2007-Up	1	
45483C	Cup Plug, 6L80/6L90 Rear Case 2WD Only (Steel)(1/2” Diameter)(4x4 Does Not Use These, If 4x4 Is Used In A 2WD, These Must Be Installed)	1	

PART #	HARDPARTS	QTY	REFERENCE #
45520B	Stator, 6L45/6L50 Pump (8 7/8”Tall, 27 Splines)(Aluminum Ring Lands) 2007-Up	1	
45520C	Stator, 6L80/6L90 Pump (9 1/8” Tall, 36 Splines) (Steel Ring Lands)(Uses 1 Piece Type Rings) 2006-08	1	
45520CAK	Stator Assembly, 6L80/6L90 Pump (Updated) 2007-Up (Contains #520, 179, 211, 036, 037, 311, 070, 342, 383, 384, 379)(Works For 2007 GMC Yukon Denali)	1	

PART #	PUMP COMPONENTS	QTY	REFERENCE #
S45507AP-1	Valve Kit, 6L45/6L50/6L80/6L90 Pressure Regulator	1	
S45507APK	Valve Kit, 6L45/6L50/6L80/6L90 Pressure Regulator & Boost (Oversized) (Requires T-F-104520-TL7C, T-VB-Fix & T-VB-06)	1	
T-F-104520-TL7C	Reamer Kit For S45507APK	1	
S45507ATK	Valve Kit, 6L45/6L50/5L80/5L90 Boost	1	
S45507C-1	Feed Limit Valve, 6L45/+L50/6L80/6L90 Converter (Oversized)(Requires T-F-104520-TL11C And T-VB-Fix)	1	
T-F-104520-TL11C	Reamer Kit For S45507C-1	1	
A45507CPK	Pressure Regulator Valve Kit, 6L80/6L90 (Valve, Spring & Seat)(Fixes 3 Transmissions) 2006-Up (Transgo)	1	
S45507PBK	Booster Kit, 6L45/6L50/6L80/6L90 Line Pressure (Sonnax)	1	

© Whatever It Takes Transmission Parts. Inc.

45531B ..... Rotor Kit, 6L50/6L80/6L90 Pump (.706" Thick Rotor) 2006-Up (Contains: #314, 315, 536, 540, 535, 538, 539, 532, 533)(Does Not Come With #534 The Outer Slide) 1
45532B ..... Rotor, 6L45/6L50/6L80/6L90 Pump (13 Vane)(.708"Thick, 3.415"OD, 1.832"ID) 2006-Up 1
45533B ..... Vane, 6L45/6L50/6L80/6L90 Pump (.079"Thick, .706"Tall, .534"Wide) 2006-Up 13
45534B ..... Outer Slide, 6L45/6L50/6L80/6L90 Pump (.706"Thick, 3.695"ID) 2006-Up 1
45535B ..... Pin, 6L45/6L50/6L80/6L90 Pump Slide Pivot Pin (Spring # 540 Locks Onto This Pin) 2006-Up 1
45536B ..... Spring, 6L45/6L50/6L80/6L90 Outer Pump Slide (.675"OD, 1.900"Long) 2006-Up 1
S45536BHP ..... Spring, 6L50/6L80/6L90 Outer Pump Slide (High Performance) 2006-Up (Sonnax) 1
45538B ..... Ring, 6L45/6L50/6L80/6L90 Pump Vane (.102"Thick, 2.625"OD, 2.355"ID) 2006-Up 2
45539B ..... Rotor Guide, 6L45/6L50/6L80/6L90 Pump (13 Vane, 12 Openings) (1.845"ID) 2006-Up 1
45540B ..... Spring, 6L45/6L50/6L80/6L90 Pump Slide Pivot Spring (Locks Onto The Pivot Pin) (.317"Long) (.275"OD) 2006-Up 1

PART #	HARDPARTS (Continued)	QTY	REFERENCE #

45548B ..... Apply Ring, 6L45/6L50 3-5 Reverse Clutch (1.815"Thick, 7 1/8"OD) (Cast # 225748) 2007-Up 1
45548C ..... Apply Ring, 6L80 3-5 Reverse Clutch (1.840"Thick, 7 5/8"OD) (Cast # 24633) 2006-Up 1
S45548CHP ..... Apply Ring, 6L80 3-5 Reverse Clutch (High Capacity)(Shorter Than OE Ring Allows Elimination Of OE Waved Plate)(25% More Clutch Capacity)(Elimination Of Waved Plate Allows Room For An Additional (1) OE Friction & (1) OE Steel) 1
45548D ..... Apply Ring, 6L90 3-5 Reverse Clutch (2.000"Thick, 7 5/8"OD) (Cast # 26735) 2007-Up 1
45554B ..... Drum, 6L45/6L50 4-5-6 Clutch W/Shaft (5 Clutch) (13 5/8"Long)(5.405"OD) (3.960"Wide) (W/89 Teeth Ring Gear) 2007-Up 1
45554C ..... Drum, 6L80 4-5-6 Clutch W/Shaft (6 Clutch) (13 5/8"Long)(5.640"OD) (3.750"Wide) (W/94 Teeth Ring Gear) 2006-Up 1
45554D ..... Drum, 6L90 4-5-6 Clutch W/Shaft (7 Clutch) (13 3/4"Long)(5.640"OD) (3.810"Wide) (W/94 Teeth Ring Gear) 2007-Up 1
45554DA ..... Drum, 6L90 4-5-6 Clutch W/Shaft (7 Clutch)(13 3/4" Long)(5.640"OD)(3.915" Wide) (With 94 Teeth Ring Gear) 2007-Up 1
T-47768SAC ..... Teflon Ring Installer & Resizer, 6L80/6L90 Input Shaft (Adapt-A-Case) 1
45555B ..... Drum, 6L45/6L50 1-2-3-4 & 3-5 Reverse Clutch (7 3/4"OD) 2007-Up 1
45555C ..... Drum, 6L80 1-2-3-4 & 3-5 Reverse Clutch (8 5/16"OD, 4.555"Tall) 2006-Up 1
45555D ..... Drum, 6L90 1-2-3-4 & 3-5 Reverse Clutch (8 5/16"OD, 4.930"Tall)(.170" From Top Of Drum To Top Of Snap Ring Groove)(5 Clutch) 2007-Up 1
45555DA ..... Drum, 6L90 1-2-3-4 & 3-5 Reverse Clutch (8 5/16"OD, 4.930" Tall)(.340" From Top Of Drum To Top Of Snap Ring Groove)(4 Clutch) 2007-Up 1
45555DK ..... Drum, 6L90 1-2-3-4 & 3-5 Reverse Clutch (8 5/16" OD, 4.930" Tall) (.170" From Top Of Drum To Top Of Snap Ring Groove)(5 Clutch) 2007-Up (Loaded)(Includes From Bearing #228 To Snap Ring #873) 1
45560B ..... Piston Kit, 6L50 2-6 Clutch (7 1/4"OD Bonded Piston) 2007-Up 1
45560C ..... Piston Kit, 6L80/6L90 2-6 Clutch (7 3/4"OD Bonded Piston) 2006-Up 1
45564B ..... Piston Kit, 6L50 4-5-6 Clutch (Bonded) 2007-Up 1
45564C ..... Piston Kit, 6L80/6L90 4-5-6 Clutch (Bonded) 2006-Up 1
45564CHP ..... Piston Kit, 6L80/6L90 4-5-6 Clutch. Apply (High Capacity)(Tooth Apply Plate (#129) Eliminates Waved Plate And Allows (1) Additional Friction) 1
45565B ..... Piston Kit, 6L50 1-2-3-4 & 3-5 Reverse Clutch 2007-Up 1
45565C ..... Piston Kit, 6L80/6L90 1-2-3-4 & 3-5 Reverse Clutch 2006-07 1
45565CA ..... Piston Kit, 6L80/6L90 1-2-3-4 & 3-5 Reverse Clutch 2008-Up 1
45567B ..... Piston Kit, 6L50 Low/Reverse Clutch (.605"Thick Bonded Piston) 2007-Up 1
45567C ..... Piston Kit, 6L80/6L90 Low/Reverse Clutch (.705"Thick Bonded Piston) 2006-Up 1
45574A ..... Hub w/Shaft, 6L45 4-5-6 Clutch (8 3/4"Long)(4.020"OD)(.855"OD Shaft) 2007-Up 1
45574B ..... Hub W/Shaft, 6L50 4-5-6 Clutch (9"Long, 4.020"OD)(.855"OD Shaft) 2007-Up 1
45574C ..... Hub W/Shaft, 6L80/6L90 4-5-6 Clutch (9 1/8"Long, 4.175"OD) (.950"OD Shaft) 2006-Up 1
45574D ..... Hub W/Shaft, 6L90 (Some) 4-5-6 Clutch (10 3/8" Long)(4.175"OD)(.950"OD Shaft) 2007-Up 1
45575A ..... Hub W/Hollow Shaft, 6L45 1-2-3-4 Clutch (10 5/8"Tall)(6"OD) 2007-Up 1
45575B ..... Hub W/Hollow Shaft, 6L50 1-2-3-4 Clutch (10 3/8"Tall)(6"OD) 2007-Up 1
45575C ..... Hub W/Hollow Shaft, 6L80 1-2-3-4 Clutch (11"Tall)(6 3/16"OD) 2006-Up 1
45575D ..... Hub W/Hollow Shaft, 6L90 1-2-3-4 Clutch (11 15/16" Tall)(6 3/16"OD) 2006-Up 1
45578B ..... Hub W/Hollow Shaft, 6L45/6L50 3-5 Reverse & 2-6 Clutch (7 5/8"Tall)(6 3/16"OD) 2007-Up 1
45578C ..... Hub W/Hollow Shaft, 6L80 3-5 Reverse & 2-6 Clutch (8"Tall)(6 1/2"OD) 2006-Up 1
45578D ..... Hub W/Hollow Shaft, 6L90 3-5 Reverse & 2-6 Clutch (8 1/2" Tall)(6 1/2"OD) 2006-Up 1
45582B ..... Planet, 6L45/6L50 Input (4 Gear, Steel) (20 Teeth Pinions) (4.130"OD) 2007-Up 1
45582C ..... Planet, 6L80 Input (4 Gear, Steel) (22 Teeth Pinions) (4.480"OD) 2006-Up 1
45582D ..... Planet, 6L90 Input (6 Gear, Steel) (22 Teeth Pinions) (4.480"OD) 2007-Up 1
45584B ..... Planet, 6L50 Output (4.740"Thick Through Center, 5.040"OD) (34 Outer Lugs) 2007-Up 1
45584C ..... Planet, 6L80 Output (4.675"Thick Through Center, 6 5/16"OD) (No Outer Lugs) 2006-Up 1
45584D ..... Planet, 6L90 Output (5.195"Thick Through Center, 6 5/16"OD) (No Outer Lugs) 2007-Up 1
45594A-1 ..... Ring Gear, 6L45 Output Planet (Rear)(36 Lugs)(1.170"Thick) (97 Teeth Left Angle) 1
45594B ..... Ring Gear, 6L50 Output Planet (Front) (97 Teeth) (.885"Thick) 2007-Up 1
45594B-1 ..... Ring Gear, 6L50 Output Planet (Rear) (97 Teeht) (1.450"Thick) 2007-Up 1

© Whatever It Takes Transmission Parts. Inc.

PART #	HARDPARTS (Continued)	QTY	REFERENCE #
45594C	Ring Gear, 6L80 Output Planet (Front) (92 Teeht) (.830”Thick) 2006-Up	1	
45594C-1	Ring Gear, 6L80 Output Planet (Rear) (92 Teeth) (1.260”Thick) 2006-Up	1	
45594D	Ring Gear, 6L90 Output Planet (Front) (92 Teeth) (.945”Thick) 2007-Up	1	
45594D-1	Ring Gear, 6L90 Output Planet (Rear) (92 Teeth) (1.600”Thick) 2007-Up	1	
45612B	Sun Gear, 6L45/6L50 Input Planet (49 Teeth, 1.025”Thick, 2.450”OD) 2007-Up	1	
45612C	Sun Gear, 6L80/6L90 Input Planet (50 Teeth, 1.045”Thick, 2.540”OD) 2006-Up	1	
45614B	Sun Gear, 6L50 Output Planet (Front) (47 Teeth) (1 Wide & 1 Narrow Groove) (2.570”OD) 2007-Up	1	
45614B-1	Sun Gear, 6L50 Output Planet (Rear) (37 Teeth) (2 Narrow Grooves) (2.050”OD) 2007-Up	1	
45614C	Sun Gear, 6L80/6L90 Output Planet (Front) (46 Teeth) (1 Wide Groove) (3.115”OD) 2006-Up	1	
45614C-1	Sun Gear, 6L80 Output Planet (Rear) (35 Teeth) (1 Narrow Groove) (1.275”Thick, 2.500”OD) 2006-Up	1	
45614D-1	Sun Gear, 6L90 Output Planet (Rear) (35 Teeth) (2 Narrow Grooves) (1.720”Thick, 2.500”OD) 2007-Up	1	
45632A	Support, 6L45 2-6 & Low/Reverse (5 Clutch Low/Reverse)(5.205”Tall)(Aluminum) (Cast # 200600059) 2007-Up	1	
45632B	Support, 6L45/6L50 2-6 & Low/Reverse (6 Clutch Low/Reverse) (5.555”Tall At The Edge) (Aluminum) 2007-Up	1	
45632C	Support, 6L80 2-6 & Low/Reverse (5 Clutch Low/Reverse) (5.035”Tall At The Edge) (Aluminum) 2006-Up	1	
45632D	Support, 6L90 2-6 & Low/Reverse (6 Clutch Low/Reverse) (5.315”Tall At The Edge) (Aluminum) 2007-Up	1	
45644A	Sprag Assembly, 6L45 Low (24 Element) 2007-Up	1	
45644B	Sprag Assembly, 6L50 Low (30 Element) 2007-Up	1	
45644C	Sprag Assembly, 6L80 Low (38 Element) 2006-Up	1	
45644D	Sprag Assembly, 6L90 Low (30 Element) 2007-Up	1	
45678A	Output Shaft, 6L45 2wd (Bolt On Yoke)(9 5/8”Long)(6 1/4”OD Shell)(43 Spline)(36 Sensor Holes) (.395”Thick Park Gear) 2006-11	1	
45678AB	Output Shaft, 6L45 4x4 (7 3/8”Long)(6 1/4”OD Shell)(43 Splines)(36 Holes For Output Sensor) (.395”Park Gear) 2006-11	1	
45678B	Output Shaft, 6L50 2WD (11” Overall Length) (6 1/4”OD Shell)(44 Splines)(Bolt On Type Yoke) 2007-Up	1	
45678BA	Output Shaft, 6L50 4x4 (8 5/8”Long)(6 1/4”OD Shell)(43 Splines)(36 Holes For Output Sensor) (.475”Park Gear) 2006-11	1	
45678C	Output Shaft, 6L80 2WD (15 1/8” Overall Length) (7 1/2”OD Shell)(30 Splines) 2006-11	1	
45678CB	Output Shaft, 6L80 4x4 (32 Splines) 2006-11	1	
45678CC	Output Shaft, 6L80 (Corvette) (11 1/4” Overall Length) (5 3/4”Long Splines) (7 1/2”OD Shell) (32 Splines) 2006-11	1	
45678CCA	Output Shaft, 6L80(Corvette) (11 1/8”Long)(7 1/2”OD Shell)(32 Splines)(36 Lugs For Output Sensor 3/8” From Edge 1 piece Design w/ Ring Gears) 2012-Up	1	
45678CD	Output Shaft, 6L80E 4x4 (8” Overall Length)(7 1/4”OD)(32 Splines)(36 Lug Reluctor 1” From Edge)(2 1/2” Long Splines)(1 Piece Ring Gear)(.475” Park Gear) 2012-Up	1	
45678CF	Output Shaft 6L80 2wd (BOY w/O-Ring)(10 1/8”Long)(7 1/2”OD Shell)(32 Splines)(36 Holes For Output Sensor) 2006-11	1	
45678D	Output Shaft, 6L90 4X4 (9 1/4” Overall Length) (7 1/2”OD Shell)(29 Splines)(36 Holes For Output Sensor) 2007-11	1	
45678D-1	Output Shaft 6L90 4x4 (10 1/4”Long)(7 1/2”OD Shell)(29 Splines)(36 Holes For Output Sensor) 2006-11	1	
45678DA	Output Shaft,6L90 4x4 (10 1/4” Overall Length)(7 1/2”OD Shell)(29 Splines)(36 Lugs For Reluctor, 3/8” From Edge)(1 Piece Design With Ring Gears) 2012-Up	1	
45678DB	Output Shaft, 6L90 2WD (11 1/2” Overall Length)(7 1/4”OD Shell)(36 Splines)(36 Lugs For Reluctor, 3/8” From Edge)(5 3/4” Long Splines)(1 Piece Design With Ring Gears) 2012-Up	1	
45678DC	Output Shaft, 6L90 2WD (11 1/2” Overall Length)(7 1/2”OD Shell)(36 Splines)(36 Lugs For Reluctor, 3/8” From Edge)(5 3/4” Long Splines)(Ring Gear Is Removable) 2012-Up	1	
45699A	Retainer, 6L45 Sprag To Support (Tin)(3.985”OD) (.025”Thick)(3.010”ID)	1	
45699B	Retainer, 6L50 Sprag To Support (Tin)(5.110”OD) (.031”Thick)(4.145”ID) 2007-Up	1	
45699C	Retainer, 6L80/6L90 Sprag To Support (4.620”OD) (3.430”ID)(.035”Thick)	1	
45740B	Valve Body, 6L45/6L50 (Without Soleniod Assembly) 2007-Up	1	
45740C	Valve Body, 6L80 (Without Solenoid Assembly)(7 Check Balls)(Two Vents)(Cast # 9404 & 9581) 2006-09	1	
45740CA	Valve Body, 6L80 (Without Solenoid Assembly) 2010-Up (7 Check Balls)(No Vents) (Cast # 0955 & 0945)(Customer Must Use Their Manual Valve)	1	
45740D	Valve Body, 6L90 (Without Solenoid Assembly)(7 Check Balls)(Two Vents)(Cast # 9404 & 9581) 2007-09	1	
45740DA	Valve Body, 6L90 (Without Solenoid Assembly) 2007-13 (7 Check Balls)(No Vents) (Cast # 0955 & 0945)	1	

© Whatever It Takes Transmission Parts. Inc.

PART #	VALVE BODY COMPONENTS	QTY	REFERENCE #
S45741ACK	Valve Kit, 6L45/6L50/6L80/6L90 TCC Regulator (Oversized)(Requires T-F-104740-TL7 And T-VB-Fix)(Sonnax)	1	
T-F-104740-TL7	Tool Kit For S45741ACK (Requires T-VB-Fix)	1	
A44741G-5K	Check Ball Kit, 6L45/6L50/6L80/6L90 VB (.250"OD, Torlon)(10 Per Pack)	1	
45741AM-1	Valve, 6L45/6L50 Manual (.471"OD)(6 7/16"Long) 2007-Up	1	

PART #	HARDPARTS (Continued)	QTY	REFERENCE #
S45741AF-1A	Valve, 6L45/6L50/6L80/6L90 Pressure Regulator (Requires T-F-104740-TL12 And T-VB-Fix)	1	
T-F-104740-TL12	Tool Kit For S45741AF-1A (Requires T-VB-Fix) (Also Used For S25741F-1)	1	
S45741AG-3	Spring Kit, 6L45/6L50/6L80/6L90 Clutch Select Valve (2 Springs)(Sonnax)	1	
45741B-5	Use 44741G-5K	7	
44741G-5K	Check Ball Kit, 6L50/6L80/6L90 Valve Body (.250"OD)(Torlon)(10 Per Pack)	1	
S45741-6K	O-Ringed End Plug Kit, 6L45/6L50/6L80/6L90 2007-Up (Sonnax)(Contains: 6 Plugs & 9 O-Rings)	1	
T45741SC	Valve Kit, 6L45/6L50/6L80/6L90 Clutch Select & TCC Valve 2007-14 (Transgo)	1	
S45741-ZK	Zip Kit, 6L45/6L50/6L90 (Sonnax)(Contains: Pressure Regulator Valve Kit, Boost Valve Kit, Compensater Feed Regulator Valve Kit, TCC Regulator Valve Kit, Actuator Feed Limit Valve Kit, 7 Check Balls, 2 Clutch Select Valve Springs, 6 O-Ringed End Plugs, Center Support Seal Kit)	1	
45747CAK	Spacer, 6L80/6L90 Valve Body To Case 2007-09 (Includes Gasket)	1	
45747CBK	Spacer, 6L80/6L90 Valve Body To Case 2010-Up (Includes Gasket, 8 Check Balls And Instructions)	1	
S45749AK	Manual Valve Assembly, 6L45/6L50 (Sonnax)	1	
45750A	Bell Housing, 6L50 (Pump Body)(5 1/8" Top Bolts)(W/ Rotor Kit)(10 O'Clock Starter) (Cast # 24266466)	1	
45750AB	Bell Housing, 6L45 (Pump Body)(5 1/2"Top Bolts)(BMW)(1 O'Clock Starter)(Cast # W708156 & P133-2)(Uses Needle Bearing & Snap Ring)	1	
45750AC	Bell Housing, 6L50 (Pump Body) (5 1/8" Top Bolts)(Cast # 24239388)(8 Bolts To Case)	1	
45750AD	Bell Housing, 6L45/6L50 (Pump Body)(Cast #s 24255512/P133-2/W708163)(V6 3.0L/3.6L) (Both Retro Fit)	1	
45750B	Bell Housing, 6L50 (Pump Body) (5 1/8" Top Bolts) (Cast # 24242678) (W/Rotor Kit) 2007-Up (No Longer Available, Must Sell Bell Housing/Pump Assembly)	1	
45750BK	Bell Housing/Pump Assembly, 6L50 (5 1/8" Top Bolts) 2007-Up (Cast # 24242678)(With Rotor Kit & Stator) (This Kit Must Be Aligned Using T-46664AC)	1	
45750BA	Bell Housing, 6L50 (Pump Body) (Cast # 24226870) (W/Rotor Kit) 2007-Up (No Longer Available, Must Sell Bell Housing/Pump Assembly)	1	
45750BAK	Bell Housing/Pump Assembly, 6L50 (Cast #24226870) 2007-Up (With Rotor Kit & Stator) (This Kit Must Be Aligned Using T-46664AC)	1	
45750C	Bell Housing, 6L80 (Corvette) Rear Half (Pump Body) (2 5/8"Thick) (Cast # 24236119) (W/Rotor Kit) 2006-Up (No Longer Available, Must Sell Bell Housing/Pump Assembly)	1	
45750C-1	Bell Housing, 6L80 (Corvette) Front Half (Cast # 24236121) 2006-Up	1	
45750CA	Bell Housing, 6L80 (Pump Body) (5 1/8" Top Bolts)(W/ Rotor Kit)(Cast # 24236117)	1	
45750CK	Bell Housing/Pump Assembly, 6L80 (Rear Half)(Corvette)(2 5/8" Thick)(Cast # 24236119) 2006-Up (With Rotor Kit & Stator) (This Kit Must Be Aligned Using T-46664AC)	1	
45750D	Bell Housing, 6L80/6L90 (Chevy V-8) (Pump Body) (Cast # 24239892) (W/Rotor Kit) 2007-Up (No Longer Available, Must Sell Bell Housing/Pump Assembly)	1	
45750DK	Bell Housing/Pump Assembly, 6L80/6L90 (Cast # 24239892, 24236121, Or 24239952 On Bell) (8 Or 9 Bolt Holes To Engine) 2007-Up (With Rotor Kit & Stator)(Overall Height Is 7 3/16" Tall) (This Kit Must Be Aligned Using T-46664AC)	1	
45750DAK	Bell Housing/Pump Assembly, 6L80/6L90 (Cast # 24239892 Or 24236121 On Bell) (8 Bolt Holes To Engine) 2007-Up (With Rotor Kit & Stator)(Overall Height Is 7 3/16" Tall)(This Kit Must Be Aligned Using T-46664AC)	1	
45750EK	Bell Housing/Pump Assembly, 6L80/6L90 (Cast # 24248033 Or 24248034 On Bell) 2007-Up (With Rotor Kit & Stator)(Less Valves)(Overall Height Is 7 3/16" Tall)(This Kit Must Be Aligned Using T-46664AC)	1	
45750FK	Bell Housing/Pump Assembly, 6L90 (Cast # 24234236)(Overall Height Is 7 5/8" Tall)(With Rotor Kit & Stator)(Less Valves)(This Kit Must Be Aligned Using T-46664AC)	1	
T-46664AC	Tool, 6L80/6L90 Pump Alignment (Adapt-A-Case)	1	
45760A	Case, 6L45 (17 Pan Bolts)(16 3/4" From Bell To Snap Ring)(No Linkage Bosses)	1	
45760B	Case, 6L50 (17 Pan Bolts) (16 3/4" From Bell To Extension Housing) (Has A Linkage Seal On Each Side) 2007-Up	1	
45760C	Case, 6L80 (18 Pan Bolts) (16 5/8" From Bell To Extension Housing)(No Rear Seal And Drain Back Holes Are Open) 2006-Up	1	
45760CA	Case, 6L80E (18 Pan Bolts)(16 5/8" From Bell To Extension Housing)(Has Rear seal And Drain Back Holes Are Plugged) 2006-Up	1	

© Whatever It Takes Transmission Parts. Inc.

PART #	HARDPARTS (Continued)	QTY	REFERENCE #
45760D	Case, 6L90 (18 Pan Bolts) (17 3/4” From Bell To Extension Housing) 2007-Up (Has Rear Seal)(Drain Back Holes Are Plugged)(This Will Work For The 45760DA If Plugs And Rear Seal Are Removed)	1	
45760DA	Case, 6L90 (18 Pan Bolts)(17 3/4” From Bell To Extension Housing) 2007-Up (No Rear Seal And Drain Back Holes Are Open)(Can Use 45760D If Plugs #45483C And Rear Seal Are Installed)	1	
45765A	Pan, 6L45 (17 Bolts)(3” Deep At Magnet)(Bottom Drain Plug)	1	
45765B	Pan, 6L50 (17 Bolt, W/Bottom Drain Plug) 2007-Up	1	
45765C	Pan, 6L80 (18 Bolt, W/Bottom Drain Plug)(17 1/8” Long) 2006-Up	1	
45765CA	Pan, 6L80 (18 Bolt, No Drain Plug)(17 1/8” Long) 2006-Up	1	
45765D	Pan, 6L90 (18 Bolt, No Drain Plug)(18 1/2” Long) 2007-Up	1	
45770A	Extension Housing, 6L45/6L50 (2 1/2”Thick At Seal)(Needle Brg)(Bolt On Yoke)(Cast #s 24227663 & 24249875) 2007-Up	1	
45770C	Extension Housing, 6L80 4X4 (8 Bolts To Transfer Case) (Aluminum) (1 5/8”Thick) (Cast # 24226019) 2006-Up	1	
45770CA	Extension Housing, 6L80 4x4 (6 Bolts To Transfer Case)(Aluminum)(3 9/16”Thick) (Cast # 24237397) 2006-Up	1	
45770CB	Extension Housing, 6L80 4X4(6 Bolts To Transfer Case)(4” Thick)(Cast # 12578123) 2006-Up	1	
45770CC	Extension Housing, 6L80 4X4(6 Bolts To Transfer Case)(3 5/8”Thick)(Cast # 24241166) 2006-Up	1	
45770CJ	Extension Housing, 6L80 2WD (5 7/8” Long) (2 Bolt Mount)(2.690”OD Rear Seal) 2006-Up	1	
45770CK	Extension Housing, 6L80 2WD (5 7/8” Long)(2 Bolt Mount)(3.020”OD Rear Seal) 2006-Up	1	
45777BK	Bolt Set, 6L45/6L50 Bell Housing To Case (7 Pieces) (13mm) 2007-Up	1	
45777CK	Bolt Set, 6L80/6L90 Bell Housing To Case (8 Pieces) (15mm) 2006-Up	1	
45778B-1	Bolt Set, 6L45/6L50/6L80/6L90 Stator Tube To Stator Body (6 Pieces) 2006-Up	1	
45778BK	Bolt Set, 6L45/6L50/6L80/6L90 Stator To Bell Housing (13 Pieces) (8mm) 2006-Up	1	
45779BK	Bolt Set, 6L45/6L50 Bottom Pan (17 Pieces) (10mm) 2007-Up	1	
45779CK	Bolt Set, 6L80/6L90 Bottom Pan (18 Pieces) (10mm) 2006-Up	1	
45781BK	Bolt Set, 6L45/6L50/6L80/6L90 Extension Housing To Case (6 Pieces) 2006-Up	1	
45782BK	Bolt Set, 6L45/6L50/6L80/6L90 Valve Body To Case (6 Pieces) 2006-Up	1	
45791BK	Bolt Set, 6L45/6L50/6L80/6L90 Solenoid Assembly To Valve Body (6 Pieces) 2006-Up	1	
45792AK	Bolt Set, 6L45/6L50/6L80/6L90 Neutral Switch To VB (2006-Up)	1	
45798B	Nut, 6L45/6L50 Yoke To Output Shaft (30mm) 2007-Up	1	
45841B	Yoke, 6L45/6L50 Drive Shaft (3 Hole, 1.670”OD, 2.190”Tall) 2007-Up	1	
45861B	Snap Ring, 6L45/6L50 Holds 2-6 Clutch Pressure Plate In 2-6 & Low/Reverse Support (.094”Thick, 7 7/8”OD) 2007-Up	1	
45861C	Snap Ring, 6L80/6L90 Holds 2-6 Clutch Pressure Plate In 2-6 & Low/Reverse Support (.080”Thick, 8 3/8”OD) 2006-Up	1	
45862B	Snap Ring, 6L45/6L50 Holds 2-6 Clutch Return Spring In (.117”Thick, 8”OD, .202”Wide) (Beveled) 2007-Up	1	
45862C	Snap Ring, 6L80/6L90 Holds 2-6 Clutch Return Spring In (.117”Thick 8 3/4”OD, .154”Wide) (Beveled) 2006-Up	1	
45872B	Snap Ring, 6L45/6L50/6L80/6L90 Holds 1-2-3-4 Clutch Piston In Drum (.066”Thick, 3.175”OD) 2006-Up	1	
45873B	Snap Ring, 6L45/6L50 Holds 1-2-3-4 Clutch Pressure Plate In (.134”Thick, 8 1/4”OD) 2007-Up	1	
45873C	Snap Ring, 6L80/6L90 Holds 1-2-3-4 Clutch Pressure Plate In (.118”Thick, 8 3/4”OD) 2006-Up	1	
45873CB	Snap Ring, 6L80/6L90 Holds 1-2-3-4 Clutch Pressure Plate In (.129”Thick, 8 3/4”OD) 2006-Up	1	
45874B	Snap Ring, 6L45/6L50/6L80/6L90 Holds 1-2-3-4 Clutch Spring Retainer In Drum (.047”Thick, 2.675”OD) 2006-Up	1	
45875B	Snap Ring, 6L50/6L80/6L90 Holds Dampener In 4-5-6 Hub (.059”Thick, 4.065”OD) (Waved) 2006-Up	1	
45876B	Snap Ring, 6L45/6L50 Holds 4-5-6 Clutch Pressure Plate In (.134”Thick, 5.455”OD) 2007-Up	1	
45876C	Snap Ring, 6L80/6L90 Holds 4-5-6 Clutch Pressure Plate In (Selective) (5.730”OD) 2006-Up	1	
45877B	Snap Ring, 6L45/6L50 Holds 4-5-6 Clutch Bonded Retainer In Drum (.077”Thick, 1.240”OD) (W/2 Eyelets) 2007-Up	1	
45877C	Snap Ring, 6L80/6L90 Holds 4-5-6 Clutch Bonded Retainer In Drum (.077”Thick, 1.370”OD) (W/2 Eyelets) 2006-Up	1	
45878B	Snap Ring, 6L45/6L50 Holds 3-5 Reverse Clutch Pressure Plate In (.107”Thick, 8 1/4”OD) 2007-Up	1	
45878C	Snap Ring, 6L80/6L90 Holds 3-5 Reverse Clutch Pressure Plate In (.087”Thick, 8 3/8”OD) 2006-Up (Green)	1	
45878CA	Snap Ring, 6L80/6L90 Holds 3-5 Reverse Clutch Pressure Plate In (.085”Thick)(8 3/8”OD) (Plain) 2006-Up	1	
45878CB	Snap Ring, 6L80/6L90 Holds 3-5 Reverse Clutch Pressure Plate In (.097”Thick, 8 3/8”OD) 2006-Up (Purple)	1	
45878CC	Snap Ring, 6L80/6L90 Holds 3-5 Reverse Clutch Pressure Plate In (.115”Thk)(8 3/8”OD) (Blue) 2006-Up	1	

© Whatever It Takes Transmission Parts. Inc.

45878CD ..... Snap Ring, 6L80/6L90 Holds 3-5 Reverse Clutch Pressure Plate In (.125”Thk)(8 3/8”OD) (Red) 2006-Up 1
45883B ..... Snap Ring, 6L45/6L50 Holds 2-6 & Low/Reverse Support In Case (.140”Thick, 8 5/8”OD) (With 2 Eyelets) 2007-Up 1
45883C ..... Snap Ring, 6L80/6L90 Holds 2-6 & Low/Reverse Support In Case (.160”Thick, 9 1/8”OD) (With 2 Eyelets) 2006-Up 1
45884B-1 ..... Snap Ring, 6L45/6L50 Holds Low Sprag Assembly To 2-6 & Low/Reverse Support (.059”Thick, 3.610”OD) 2007-Up 1
45884C ..... Snap Ring, 6L80/6L90 Holds Low Sprag To Outer Race (.046”Thick, 4.780”OD) 2006-Up 1
45884C-1 ..... Snap Ring, 6L80/6L90 Holds Low Sprag To 2-6 & Low/Reverse Support (.059”Thick, 3.075”OD) 2006-Up 1
45885B ..... Snap Ring, 6L45/6L50 Holds Low/Reverse Clutch Pressure Plate In Support (.108”Thick, 7 3/8”OD) 2007-Up 1
45885C ..... Snap Ring, 6L80/6L90 Holds Low/Reverse Clutch Pressure Plate In Support (.092”Thick, 7 7/8”OD) 2006-Up 1
45887A ..... Snap Ring, 6L45 Sprag To Support (2.570”OD)(.052”OD) (.136”Wide) (Only In 6L45) 1
45889B ..... Snap Ring, 6L45/6L50 Holds Front Output Ring Gear To Output Shaft (Both Sides) (.097”Thick, 6 3/8”OD) 2007-Up 1
45889C ..... Snap Ring, 6L80/6L90 Holds Front Output Ring Gear To Output Shaft (Both Sides) (.083”Thick, 7 11/16”OD) 2006-Up 1
45898A ..... Snap Ring, 6L45 (BMW Only) Holds Front Pump Converter Bearing (.049”Thk)(2.346”OD) 1
45898B ..... Snap Ring, 6L45/6L50/6L80/6L90 Holds Front Seal To Bell Housing (.060”Thick, 3.180”OD) 2006-Up 1
45956B ..... Piston/Housing, 6L45/6L50 1-2-3-4 Clutch (1.590”Thick, 6 5/8”OD, 3 1/8”ID) (Aluminum) 2007-Up 1
45956C ..... Piston/Housing, 6L80/6L90 1-2-3-4 Clutch (1.508”Thick, 7 1/8”OD, 3 1/8”ID) (Aluminum) 2006-Up 1
45960B ..... Piston, 6L45/6L50 2-6 Clutch (.830”Thick, 7 1/4”OD, 6 3/16”ID) (Bonded) (20 Notches) 2007-Up 1
45960BK ..... Piston Kit, 6L45/6L50 (Bonded) 2007-Up 1
45960C ..... Piston, 6L80/6L90 2-6 Clutch (.875”Thick, 7 15/16”OD, 6 1/2”ID) (Bonded) (18 Notches) 2006-Up 1
45960CK ..... Piston Kit, 6L80/6L90 (Bonded) (5 Pieces) 2006-Up 1
45962B ..... Piston, 6L45/6L50 1-2-3-4 Clutch (1.400”Thick, 6 5/8”OD, 3.030”ID) (Aluminum) (Cast # 24241073) 2007-Up 1
45962C ..... Piston, 6L80/6L90 1-2-3-4 Clutch (1.415”Thick, 7 1/8”OD, 3.030”ID) (Aluminum) (Cast # 24238700) 2006-Up 1
45964B ..... Piston, 6L45/6L50 4-5-6 Clutch (.965”Thick, 4.600”OD, 1.335”ID) (Bonded) 2007-Up 1
45964C ..... Piston, 6L80/6L90 4-5-6 Clutch (.805”Thick, 4.960”OD, 1.445”ID) (Bonded) 2006-Up 1
45965B ..... Piston, 6L45/6L50 3-5 Reverse Clutch (1.400”Tall, 7 1/4”OD, 5.150”ID) (Cast # 24238561) 2007-Up 1
45965C ..... Piston, 6L80/6L90 3-5 Reverse Clutch (1.500”Tall, 7 3/4”OD, 5.600”ID) (Cast # 24238697) 2006-Up 1
S45962CHD ... Piston, 6L80/6L90 1-2-3-4 Clutch (1.415”Thick)(7 1/8”OD)(3.030”ID)(Aluminum) 2008-Up (Sonnax) 1
45967B ..... Piston, 6L45/6L50 Low/Reverse Clutch (.605”Thick, 7”OD, 4 5/8”ID) (Bonded) (8 Notches) 2007-Up 1
45967C ..... Piston, 6L80/6L90 Low/Reverse Clutch (.705”Thick, 7”OD, 3 3/8”ID) (Bonded) (12 Notches) 2006-Up 1
45970B ..... Spring, 6L45/6L50 2-6 Clutch Return (.053”Thick, 7 1/4”OD) (20 Fingers) 2007-Up 1
45970C ..... Spring, 6L80/6L90 2-6 Clutch Return (.062”Thick, 7 15/16”OD) (18 Fingers) 2006-Up 1
45972B ..... Spring, 6L45/6L50 1-2-3-4 Clutch Return (.061”Thick, 5.210”OD) (12 Fingers) 2007-Up 1
45972C ..... Spring, 6L80/6L90 1-2-3-4 Clutch Return (.061”Thick, 5.405”OD) (12 Fingers) 2006-Up 1
45974B ..... Spring, 6L45/6L50 4-5-6 Clutch Return (.068”Thick, 4.335”OD) (10 Fingers) 2007-Up 1
45974C ..... Spring, 6L80/6L90 4-5-6 Clutch Return (.075”Thick, 4.710”OD) (10 Fingers) 2006-Up 1
45975B ..... Spring, 6L45/6L50 3-5 Reverse Clutch (6 3/8”OD) (16 Fingers) 2007-Up 1
45975C ..... Spring, 6L80/6L90 3-5 Reverse Clutch (6 13/16”OD) (16 Fingers) 2006-Up 1
45977B ..... Spring, 6L50 Low/Reverse Clutch Return (.062”Thick, 5.652”OD) (16 Fingers) 2007-Up 1
45977C ..... Spring, 6L80/6L90 Low/Reverse Clutch Return (.069”Thick, 5.335”OD) (12 Fingers) 2006-Up 1
45982B ..... Retainer/Piston, 6L45/6L50 1-2-3-4 Clutch Spring (Bonded) (5.305”OD, 2.705”ID) 2007-Up 1
45982C ..... Retainer/Piston, 6L80/6L90 1-2-3-4 Clutch Spring (Bonded) (5.435”OD, 2.705”ID) 2006-Up 1
45984B ..... Retainer/Piston, 6L45/6L50 4-5-6 Clutch Return Spring (Bonded) (.880”Thick, 4.365”OD, 1.100”ID) 2007-Up 1
45984C ..... Retainer/Piston, 6L80/6L90 4-5-6 Clutch Return Spring (Bonded) (.810”Thick, 4.760”OD, 1.200”ID) 2006-Up 1
45991B-2 ..... Detent Spring, 6L45/6L50/6L80/6L90 Rooster Comb (6 1/4”Long) 2006-Up 1
45991B-3 ..... Rooster Comb, 6L45/6L50/6L80/6L90 2006-Up 1
45991B-4 ..... Manual Shaft, 6L45/6L50 (10 3/16” Long) 2007-Up 1
45991C-4 ..... Manual Shaft, 6L80/6L90 (3 7/8” Long) 2006-Up 1
45994B ..... Park Rod Actuator, 6L45/6L50 (12 1/2”Long) 2007-Up 1
45994C ..... Park Rod Actuator, 6L80 (12 3/4”Long) 2006-Up 1

© Whatever It Takes Transmission Parts. Inc.

PART #	HARDPARTS (Continued)	QTY	REFERENCE #
45994D	Park Rod Actuator, 6L90 (14” Long) 2007-Up	1	
45995A-2	Roll Pin, 6L45/6L50/6L80/6L90 Park Pawl	1	
45995B	Park Pawl Assembly, 6L45/6L50/6L80 (.350”Thick Park Pawl) 2006-Up	1	
45995D	Park Pawl Assembly, 6L90 (.435”Thick Park Pawl) 2007-Up	1	
74996R	Fitting, 6L80/6L90 Radiator (Threads In Radiator For Push In Cooler Lines) 2008-11)	1	

REBUILD ESSENTIALS
for 6L45, 6L50, 6L80, 6L90

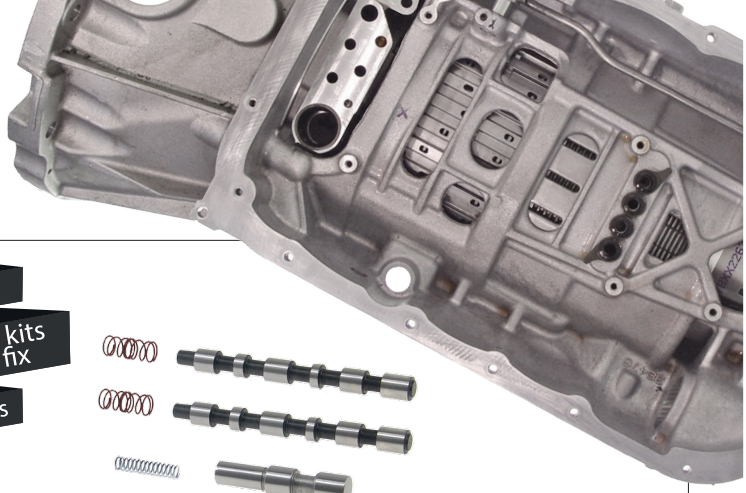



No reaming

Combine these 2 kits for a longterm fix

No special tools

6L45, 6L80, 6L90 Valve Body Repair Kit
#T45165A

Drop-in components to restore proper pressure regulator and solenoid regulator valve function and over-boost protection.

Corrects, Prevents, Reduces
- Extreme pressure damage
- Pressure regulator/solenoid regulator valve function

Also Includes
- Drop-in pressure regulator valve
- Drop-in EPC relief assembly with new boost valve
- Drop-in solenoid regulator valve assembly
- High temp HD stator rings
- (5) pressure switch repair elements

Converter clutch apply issues? This is the fix!

6L45, 6L80, 6L90 Clutch Select and TCC Regulator Valve Kit
#T45741SC

This drop-in TCC regulator valve refines the computer's ability to control TCC regulation more accurately, resulting in better slip control. Improvements are noticeable where the computer typically struggles to hold converter slip speed steady: During cylinder deactivation at low speeds

Corrects, Prevents, Reduces
- Low speed TCC chuggle or cycling during cylinder deactivation resulting in converter clutch failure
- Shift solenoid performance codes or false P0751 due to sticking or dragging clutch select valves

GEN2 REBUILD ESSENTIALS
for 6F35, 6T40, 6T70

Universal GEN2 Reamer and Guide Kit #T-AFL-G2-TK
Due to the new vent locations and the amount of bore wear on Ford and GM 6-spd FWD GEN2 units, these valve bodies have very common leakage issues that can only be corrected by reaming and installing new actuator feed limit valves on GM units and solenoid regulator valves on Ford units.

TransGo engineered one universal toolkit with reusable reamer and 3 grooved sleeves that will work on all TransGo valve body repair kits for GEN2 Ford and GM 6-spd FWDs.

This is a Must Have money-saver

#T-AFL-G2-TK
Universal reamer and guide kit

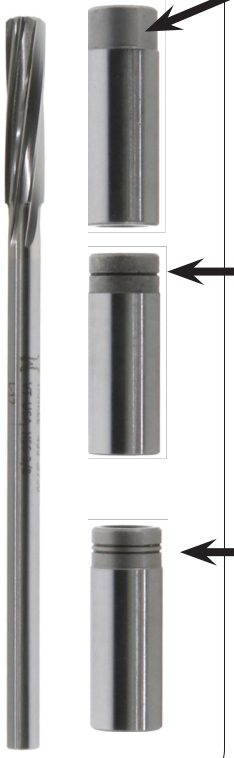

#T25165BA
6T70 GEN2 valve body repair kit
uses no groove guide



#T46165BA
6F35 GEN2 valve body repair kit
uses 1 groove guide

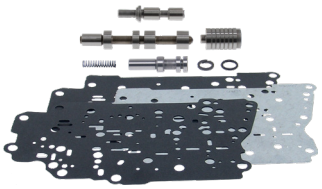

#T46165AB
6T40 GEN2 valve body repair kit
uses 2 groove guide



ID GEN1 from GEN2
6T70/6T40: GEN1 has pressure switches in the TEHCMs, GEN2 does not.

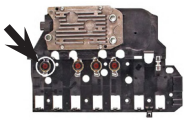

6T40 GEN1

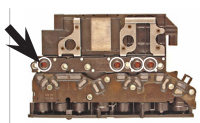

6T70 GEN1

6F35: ID from the backside and look for dampeners. GEN1 does not have dampeners, GEN2 does.

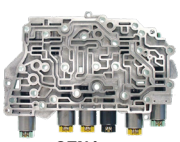

GEN1
2009-mid 13

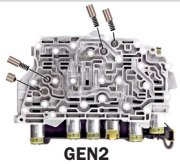

GEN2
mid 2013-on
has dampeners

Technical data ©TransGo. All rights reserved. TransGo®, Shift Kit®, SK® and Reprogramming Kit™ are registered and licensed trademarks.

GM

002 Overhaul Kit

004 Master L/Steels Kit

006 Master W/Steels Kit

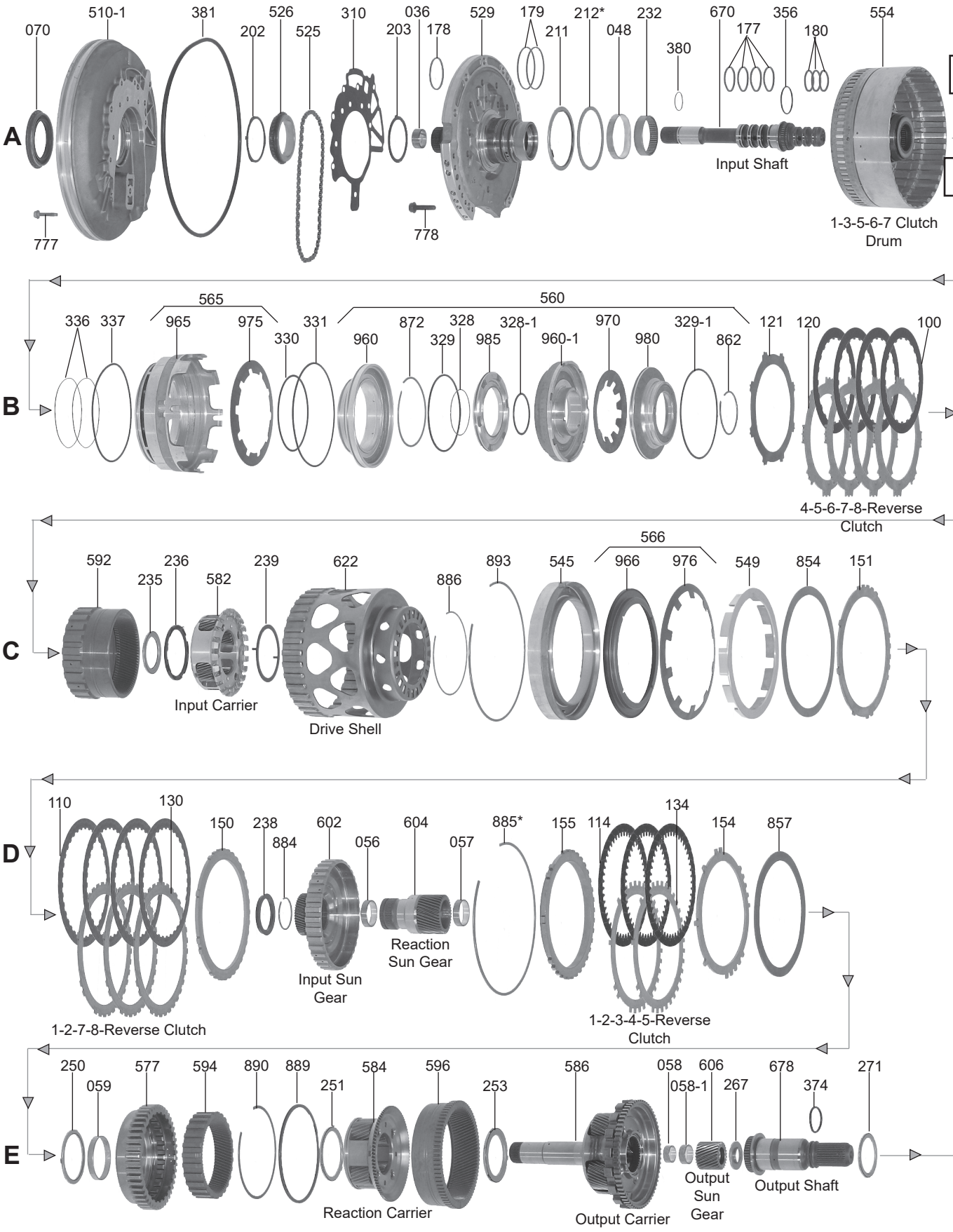

© Whatever It Takes Transmission Parts. Inc.

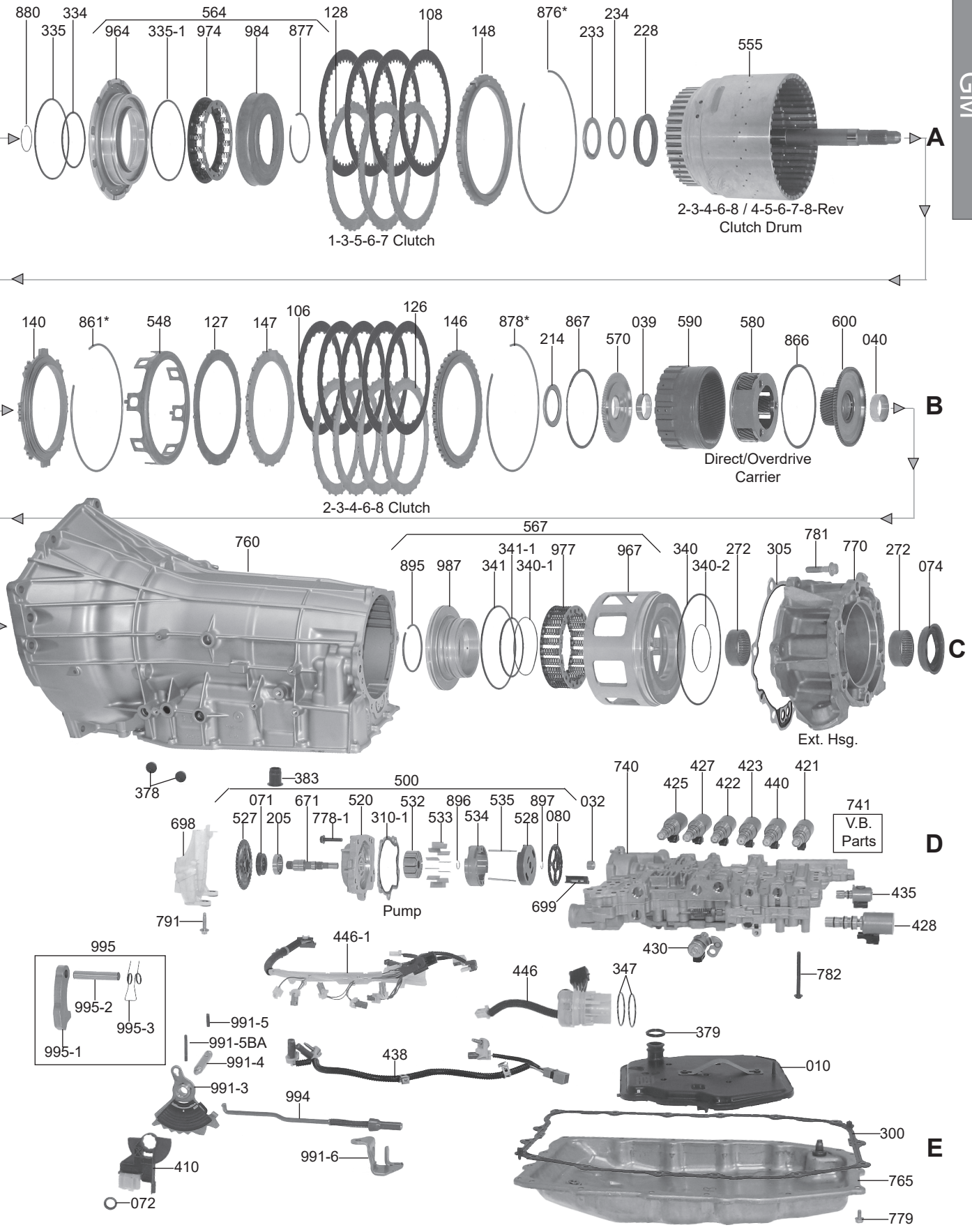

© Whatever It Takes Transmission Parts. Inc.

PART #	OVERHAUL KITS	QTY	REFERENCE #
334002AW	Overhaul Kit, 8L45 2016-Up	1	
334002APW	Overhaul Kit, 8L45 (With Pistons) 2016-Up	1	
334002B	Overhaul Kit, 8L90 2015-Up	1	
334002BP	Overhaul Kit, 8L90 (W/Pistons) 2015-Up	1	

PART #	MASTER L/STEELS KITS	QTY	REFERENCE #
334004B	Master L/Steels Kit, 8L90 2015-Up	1	
334004BP	Master L/Steels Kit, 8L90 (with Pistons) 2015-Up	1	

PART #	MASTER W/STEELS KITS	QTY	REFERENCE #
334006B	Master W/Steels Kit, 8L90 2015-Up	1	

PART #	FILTERS	QTY	REFERENCE #
334010B	Filter, 8L90 2015-16 (Also Fits 8L45 2016-18)	1	24268875

PART #	BUSHINGS	QTY	REFERENCE #
334032B	Bushing, 8L90 Pump Shaft To Valve Body (.375"ID) 2015-Up	1	
334036B	Bushing, 8L90 Stator Tube (Front)(.505"Wide)(1.125"OD) (1.112"ID)(Babbit) 2015-Up	1	
334039B	Bushing, 8L90 Direct/Overdrive Hub (.295"Wide)(1.355"ID)(Babbit) 2015-Up	1	
334040B	Bushing, 8L90 Direct/Overdrive Carrier Sungear/Hub (Rear) (.658"Wide)(1.540"OD)(1.410"ID) (Babbit) 2015-Up	1	
334048B	Bushing, 8L90 1-3-5-6-7 Drum (Front)(2.705"ID)(.440"Wide) (Babbit) 2015-Up	1	
334056B	Bushing, 8L90 Reaction Sun Gear (Front)(.355"Wide) (1.540"OD)(Babbit) 2015-Up	1	
334057B	Bushing, 8L90 Reaction Sun Gear (Rear)(.355"Wide)(1.600"OD) (Babbit) 2015-Up	1	
334058-1B	Bushing, 8L90 Output Planet (Rear) 2015-Up	1	
334058B	Bushing, 8L90 Output Planet (Front) 2015-Up	1	
334059B	Bushing, 8L90 1-2-3-4-5-Reverse Clutch Hub (Front)(.380"Wide) (2.415"OD)(2.305"ID)(Babbit) 2015-Up	1	

PART #	METAL CLAD SEALS	QTY	REFERENCE #
334070B	Seal, 8L90 Front (3.520"OD W/Flange)(2.210"ID) 2015-Up	1	
334071B	Seal, 8L90 Pump Shaft (.270"Thick)(1.230"OD)(.650"ID) 2015-Up	1	
334072B	Use 44072	1	
44072	Seal, 8L90 Manual Shaft (.188"Thick)(.755"OD) 2015-Up	1	24235861
334074B	Seal, 8L90 Rear Output Shaft (2.707"/3.025"OD) 2015-Up (National #2422886)	1	
334080B	Seal, 8L90 Pump Cover To Valve Body (Plastic W/Bonded Rubber) 2015-Up	1	

PART #	FRICTION CLUTCH	QTY	REFERENCE #
334100B	Friction, 8L90 4-5-6-7-8-Reverse Clutch (.065"Thick)(21 Teeth)(6 5/16"OD) 2015-Up	4	
334106B	Friction, 8L90 2-3-4-6-8 Clutch (.065"Thick)(23 Teeth)(6 13/16"OD) 2015-Up	4	
334108B	Friction, 8L90 1-3-5-6-7 Clutch (.074"Thick)(42 Teeth)(7 9/16"OD) (4 Sets Of Straight Grooves) 2015-Up	4	
334108BHP	Friction, 8L90 1-3-5-6-7 Clutch (.074”Thick)(42 Teeth)(7 9/16”OD)(Waved) 2015-Up (GPZ)	4	
334110B	Fri, 8L90 1-2-7-8-Reverse Clutch (.057"Thick)(36 Teeth)(7 11/16"OD) 2015-Up	4	
334114B	Friction, 8L90 1-2-3-4-5-Reverse Clutch (.081"Thick)(48 Teeth)(7 5/16"OD) 2015-Up	3	

PART #	STEELS CLUTCH	QTY	REFERENCE #
334120B	Steel, 8L90 4-5-6-7-8-Reverse Clutch (.096"Thick)(8 Teeth W/3 Points On Each Tooth)(5.070"ID) 2015-Up	4	24258192
334121B	Steel, 8L90 4-5-6-7-8-Reverse Clutch (.059"Thick)(8 Teeth)(5.120"ID)(Waved) 2015-Up	1	24258194
334126B	Steel, 8L90 2-3-4-6-8 Clutch (.095"Thick)(26 Teeth)(5.540"ID) 2015-Up	4	24259295
334127B	Steel, 8L90 2-3-4-6-8 Clutch (.114"Thick)(12 Teeth)(5.535"ID) (Waved) 2015-Up	1	24270023
334128B	Steel, 8L90 1-3-5-6-7 Clutch (.110"Thick)(36 Teeth)(6 1/4"ID) 2015-Up	4	24259243
334130B	Steel, 8L90 1-2-7-8-Reverse Clutch (.077" Thick)(28 Teeth)(6 5/8"ID) 2015-Up	3	
334134B	Steel, 8L90 1-2-3-4-5-Reverse Clutch (.077" Thick)(27 Teeth)(6 3/8"ID) 2015-Up	2	24268820

PART #	PRESSURE PLATES	QTY	REFERENCE #
334140B	Pressure Plate, 8L90 4-5-6-7-8-Reverse Clutch (.488"/.184" Thick, Stepped) (8 Teeth W/3 Points Each Tooth) 2015-Up	1	24261013

© Whatever It Takes Transmission Parts. Inc.

334146B ..... Pressure Plate, 8L90 2-3-4-6-8 Clutch (.335" Thick)(46 Teeth W/4 Wide Teeth) (7 1/8"OD) 2015-Up 1 24259296
334147B ..... Pressure Plate, 8L90 2-3-4-6-8 Clutch (Bottom)(.190" Thick)(26 Teeth)(5.540"ID) 2015-Up 1 24261070
334148B ..... Pressure Plate, 8L90 1-3-5-6-7 Clutch (36 Teeth)(6 1/4"ID)(.435/.255"Thick) (1 Index Lug On Top) 2015-Up 1 24271869
334150B ..... Pressure Plate, 8L90 1-2-7-8-Reverse Clutch (Top)(.213"Thick)(28 Teeth) (7 15/16"OD) (Stepped) 2015-Up ..... 1 .....
334151B ..... Pressure Plate, 8L90 1-2-7-8-Reverse Clutch (Bottom)(.117"Thick)(15 Teeth) (8 1/16"OD) 2015-Up ..... 1 .....
334154B ..... Pressure Plate, 8L90 1-2-3-4-5-Reverse Clutch (Bottom)(.148"Thick)(15 Teeth) (8 1/16"OD) 2015-Up ..... 1 .....
334155B ..... Pressure Plate, 8L90 1-2-3-4-5-Reverse Clutch (Top)(.490"/.256"Thick) (Stepped)(28 Teeth) (6 5/16"ID) 2015-Up 1 24268819

PART #	OIL SEALING RINGS	QTY	REFERENCE #
334177B	Sealing Ring, 8L90 Input Shaft (Front)(1.485"OD)(.105" Thick) 2015-Up	4	
334178B	Sealing Ring, 8L90 Converter Neck To Stator Tube (1.935"OD) (.085"Thick) 2015-Up	2	
334179B	Sealing Ring, 8L90 Stator Tube (Rear)(2.525"OD)(.103"Thick) (Forked Lap Joint) 2015-Up	2	
334180B	Sealing Ring, 8L90 Input Shaft (Rear) (1.220"OD)(.099"Thick) 2015-Up	3	

PART #	WASHERS & BEARINGS	QTY	REFERENCE #
334202B	Washer, 8L90 Front Cover To Sprocket (.095"Thick)(2.410"ID) (Plastic)(1 Tab)(3 Slots) 2015-Up	1	
334203B	Washer, 8L90 Sprocket To Stator Tube (Plastic)(1 Tab) (2.325"ID)(.106"Thick)(3 Slots) 2015-Up	1	
334205B	Ball Brg, 8L90 Pump Shaft (.275"Thick)(1.181"OD)(.670"ID) 2015-Up	1	
334211B	Brg W/Races, 8L90 Stator Tube To 1-3-5-6-7 Drum (.127"Thick) (3.877"OD)(3.255"ID) 2015-Up	1	24250171
334212BA	Shim, 8L90 Stator Tube To 1-3-5-6-7 Drum (Black) (3.815"OD)(3.335"ID) 2015-Up	1	24250943
334212BB	Shim, 8L90 Stator Tube To 1-3-5-6-7 Drum (Brown) (3.815"OD)(3.355"ID) 2015-Up	1	24250941
334212BC	Shim, 8L90 Stator Tube To 1-3-5-6-7 Drum (Dark Blue) (3.815"OD)(3.355"ID) 2015-Up	1	24250946
334212BD	Shim, 8L90 Stator Tube To 1-3-5-6-7 Drum (Green) (3.815"OD)(3.335"ID) 2015-Up	1	24250947
334212BE	Shim, 8L90 Stator Tube To 1-3-5-6-7 Drum (Light Blue) (3.815"OD)(3.355"ID) 2015-Up	1	24250949
334212BF	Shim, 8L90 Stator Tube To 1-3-5-6-7 Drum (Pink) (3.815"OD)(3.335"ID) 2015-Up	1	24250944
334212BG	Shim, 8L90 Stator Tube To 1-3-5-6-7 Drum (Plain) (3.815"OD)(3.355"ID) 2015-Up	1	24250945
334212BH	Shim, 8L90 Stator Tube To 1-3-5-6-7 Drum (Purple) (3.815"OD)(3.355"ID) 2015-Up	1	24250942
334212BJ	Shim, 8L90 Stator Tube To 1-3-5-6-7 Drum (White) (3.815"OD)(3.355"ID) 2015-Up	1	24277414
334214B	Brg W/Races, 8L90 Direct/Overdrive Hub/Ring Gear (Front)(.148"Thick)(2.555"OD)(1.820"ID) 2015-Up	1	25248197
334228B	Needle Bearing, 8L90 Inside 2-3-4-6-8/4-5-6-7-8-Reverse Drum (Front)(2.583"ID)(2.950"OD) 2015-Up	1	24266464
334232B	Needle Bearing, 8L90 1-3-5-6-7 Drum (Front) 2015-Up	1	
334233B	Bearing W/Races, 8L90 1-3-5-6-7 Drum (Rear)(2.553"OD)(1.815"ID)(.147"Thick) 2015-Up	1	24258197
334234B	Race, 8L90 1-3-5-6-7 Drum (Rear)(2.513"OD)(1.880"ID)(.110"Thick) 2015-Up	1	24261830
334235B	Bearing W/Races, 8L90 Direct/Overdrive Sungear To Input Planet (.148"Thick)(2.555"OD) (1.820"ID) 2015-Up	1	
334236B	Washer, 8L90 Input Carrier (Front)(2 Split Tabs)(.154"Thick) (3.270"OD)(2.680"ID) 2015-Up	1	24264099
334238B	Washer, 8L90 Input Sun Gear (Front)(.237"Thick)(2.445"OD) (Plastic)(14 ID Teeth) 2015-Up	1	24259386
334239B	Washer, 8L90 Input Carrier (Rear)(.077"Thick)(3.380"OD) (2.835"ID)(Plastic)(2 Split Tabs) 2015-Up	1	24270179
334250B	Bearing W/Races, 8L90 1-2-3-4-5-Reverse Clutch Hub (Front)(.137"Thick) (3.270"OD)(2.690"ID) (3 Tabs) 2015-Up	1	24258230
334251B	Bearing W/Race, 8L90 Reaction Planet (Front)(.136"Thick)(3.265"OD)(2.683"ID)(3 Outer Tabs) 2015-Up	1	
334253B	Bearing W/Race, 8L90 Reaction Planet To Output Planet (.197"Thick)(3.244"OD)(2.390"ID) (3 Tabs) 2015-Up	1	
334267B	Bearing W/Race, 8L90 Output Sun Gear To Output Shaft (1.705"OD) (.921"ID)(.144"/.283"Thick) 2015-Up	1	
334271B	Bearing W/Race, 8L90 Output Shaft To Case (.127"Thick)(2.635"OD) (2.050"ID) 2015-Up	1	
334272B	Needle Bearing, 8L90 Extention Housing (4x4)(Front)(.730"Wide) (2.140"OD)(INA USA F-583241) 2015-Up (Also Fits 8L90 Extention Housing (2WD) Front & Rear)	1	24266376

PART #	GASKETS & RUBBER COMPONENTS	QTY	REFERENCE #
334300B	Gasket, 8L90 Bottom Pan 2015-16 (Also Fits 8L45 2016-18)	1	24260071
334305B	Gasket, 8L90 Extention Housing To Case 2015-Up	1	
334310-1B	Gasket, 8L90 Pump Cover (Bonded Rubber) 2015-Up	1	

© Whatever It Takes Transmission Parts. Inc.

PART #	GASKETS & RUBBER COMPONENTS (Continued)	QTY	REFERENCE #
334310B	Gasket, 8L90 Cover To Stator Tube 2015-Up	1	
334334B	D-Ring, 8L90 1-3-5-6-7 Drum To Piston (Inner) 2015-Up	1	
334335-1B	D-Ring, 8L90 1-3-5-6-7 Clutch Piston (Outer) 2015-Up	1	
334335B	D-Ring, 8L90 1-3-5-6-7 Drum To Piston (Outer) 2015-Up	1	
334336B	O-Ring, 8L90 2-3-4-6-8/ 4-5-6-7-8-Reverse Piston (Inner) 2015-Up	2	
334337B	D-Ring, 8L90 2-3-4-6-8/4-5-6-7-8-Reverse Clutch Piston (Outer) 2015-Up	1	
334356B	O-Ring, 8L90 Input Shaft (Rear) To 1-3-5-6-7 Drum (1.675"OD)(.104"Thick) 2015-Up	1	
334379B	Boot, 8L90 Filter Neck (.170" Thick)(1.125"OD) 2015-Up	1	
334380B	O-Ring, 8L90 Input Shaft (Front)(1.150"OD)(.072"Thick) 2015-Up	1	
334381B	O-Ring, 8L90 Front Cover To Case (12”OD)(.265”Thick) 2015-Up	1	
334383B	Boot, 8L90 Valve Body To Case (.927"Long)(.530"ID) (.728"/.947"OD) 2015-Up	1	24259218

PART #	ELECTRICAL COMPONENTS	QTY	REFERENCE #
334410B	Sensor, 8L90 Range (10 Blade Connector) 2015-Up	1	
334438B	Wire Harness, 8L90 Input (6 Pin Connector)(W/3 Two Wire Speed Sensors) 2015-Up	1	24263402
334446-1B	Wire Harness, 8L90 Internal (22 Prong Connector)(W/1 Temperature Sensor, 1 Nine Wire Connector, & 9 Two Wire Connectors) 2015-Up	1	
334446B	Wire Harness, 8L90 Internal (27 Blade Round Case Connector) (W/22 Wire Connector & 6 Wire Connector) 2015-Up	1	24259187

PART #	HARDPARTS	QTY	REFERENCE #
334500B	Pump, 8L90 Complete 2015-Up (Contains: #527 Through #080)	1	
334510-1B	Front Cover, 8L90 To Stator (Aluminum)(11 Bolts) 2015-Up (Cast # 24272659 & 24262660)	1	
334520B	Cover, 8L90 Pump (Aluminum)(Cast # 8PST427504670000) 2015-Up	1	
334525B	Chain, 8L90 Pump Drive (43 Links)(.240" Wide) 2015-Up	1	
334526B	Sprocket, 8L90 Pump Drive (40Teeth)(.550"Thick)(3.103"OD) (2.225"ID)(2 Flats)(16 Dimples) 2015-Up	1	
334527B	Sprocket, 8L90 Driven Pump (38 Teeth)(W/Clip)(15 Spline) 2015-Up	1	
334528B	Cover, 8L90 Pump (Rear)(Steel) (.415"Thick) 2015-Up	1	
334529B	Stator Tube, 8L90 (Aluminum)(54 Spline)(9 Bolts To Case) (11 Bolts To Cover)(Cast # 24272654) 2015-Up	1	
334532B	Rotor, 8L90 Pump (12 Vane)(.708"Thick) 2015-Up	1	
334533B	Vane, 8L90 Pump (.708"Long) (.347" Wide) 2015-Up	12	
334534B	Pump Slide, 8L90 Outer (For 12 Vane Rotor)(.709"Thick) 2015-Up	1	
334535B	Pin, 8L90 Pump Outer Slide (1.694"Long) 2015-Up	2	
334545B	Piston Housing, 8L90 1-2-7-8-Reverse Clutch (Aluminum)(8 1/8"OD) 2015-Up	1	24271713
334548B	Apply Ring, 8L90 2-3-4-6-8 Clutch (8 Lugs)(6 5/8"OD) 2015-Up	1	
334549B	Apply Ring, 8L90 1-2-7-8-Reverse Clutch (10 Lugs)(7 3/4"OD) (Cast # 24269743) 2015-Up	1	24269743
334554B	Drum, 8L90 1-3-5-6-7 (4 Clutch) (Aluminum)(36 Tooth Steels)(W/Tin Reluctor)(8 Lugs On Top) 2015-Up	1	24273801
334555B	Drum W/Shaft, 8L90 2-3-4-6-8 / 4-5-6-7-8-Reverse (Aluminum) (13 1/2" Tall) 2015-Up	1	24272769
334560B	Piston Kit, 8L90 2-3-4-6-8 Clutch (6 Pieces) 2015-Up	1	
334564B	Piston Kit, 8L90 1-3-5-6-7 Clutch (Aluminum)(Cast #24272226) 2015-Up	1	
334565B	Piston Kit, 8L90 4-5-6-7-8-Reverse Clutch (Aluminum)(Cast #24268947) 2015-Up	1	
334566B	Piston Kit, 8L90 1-2-7-8-Reverse Clutch (7 3/4"OD)(Stepped) 2015-Up	1	
334567B	Piston Kit, 8L90 1-2-3-4-5-Reverse Clutch (Aluminum)(Cast #24272512) (6 7/8"OD)(In Extention Houisng) 2015-Up	1	
334570B	Hub, 8L90 Direct/Overdrive Ring Gear (79 Teeth)(4.395"OD) 2015-Up	1	
334577B	Hub, 8L90 1-2-3-4-5-Reverse Clutch (48 Outer Teeth)(27 Inner Lugs) 2015-Up	1	
334580B	Planet, 8L90 Direct/Overdrive Carrier (3 Gear)(Steel)(19 Teeth Right Angled Gears) 2015-Up	1	24259314
334582B	Planet, 8L90 Input Carrier (4 Gear)(Aluminum)(24 Lugs To Shell) (20 Teeth, Left Angle Gears) (1.885"Thick) 2015-Up	1	24271924
334584B	Planet, 8L90 Reaction (4 Gear) (Steel)(89 Outer Splines) 2015-Up	1	24259393
334586B	Planet, 8L90 Output (4 Gear) (Steel)(18 Park Lugs)(68 Teeth Reluctor)(8 3/4" Tall) 2015-Up	1	24268941
334590B	Ring Gear, 8L90 Direct/Overdrive Planet (21 Lugs)(79 Teeth Left Angle)(4.985"OD)(2.570"Tall) 2015-Up	1	24271922
334592B	Ring Gear, 8L90 Input Carrier (86 Teeth)(23 Lugs) 2015-Up	1	
334594B	Ring Gear, 8L90 Reation Planet (73 Inner Teeth)(27 Outer Lugs)(5.190"OD) 2015-Up	1	24259381
334596B	Ring Gear, 8L90 Output Planet (89 Inner Teeth)(80 Reluctor Teeth)(6 1/8"OD) 2015-Up	1	24259402
334600B	Sungear/Hub, 8L90 Direct/Overdrive Carrier (41 Teeth Left Angle) (86 Outer Teeth)(4.716"OD) 2015-Up	1	
334602B	Sun Gear W/Hub, 8L90 Input Planet (46 Teeth)(36 Lugs) 2015-Up	1	24269543
334604B	Sun Gear, 8L90 Reaction Planet (37 Teeth) 2015-Up	1	24272601
334606B	Sun Gear, 8L90 Output Planet (25 Teeth, 2 Groove)(1.378"Tall) (1.655"OD)(Splines ID) 2015-Up	1	
334622B	Shell, 8L90 Drive (Tin)(6 5/8" Tall)(36 Clutch Teeth) 2015-Up	1	24266578

© Whatever It Takes Transmission Parts. Inc.

334670B	Input Shaft, 8L90 (10 13/16" Long)(35 Converter Splines) (41 Drum Splines) 2015-Up	1	24264642
334671B	Shaft, 8L90 Pump (3.036" Long) 2015-Up	1	
334678B	Shaft, 8L90 Output (6 1/4"Long)(43 Splines Front)(32 Splines Rear)(Cast # 24267251) 2015-Up	1	24266443
334698B	Fluid Baffle, 8L90 (Plastic) (2 Bolts To Pump) 2015-Up	1	
334699B	Oil Baffle, 8L90 Pump Shaft To Valve Body (.375"ID) 2015-Up	1	
334740B	Valve Body, 8L90 Less Pump (9 Solenoids)(Cast #24272846 On Top)(Cast #24274308 On Bottom)(Cast # 24273239 On Cover) 2015-Up	1	
334760B	Case, 8L90 (15 Pan Bolts) (Cast # 24267654) 2015-Up	1	
334765B	Pan, 8L90 Bottom (15 Bolts) (Has Fluid Check Plug In Stepped Corner) 2015-Up	1	24269568
334770B	Extention Housing, 8L90 4x4 (Aluminum)(Cast # 24272521)(2 Bolt Mount) 2015-Up	1	
334770BA	Extention Housing, 8L90 (2WD)(Cast # 24266372AA) 2015-Up	1	
334777BK	Bolt Set, 8L90 Front Cover To Stator (11 Pieces)(Hex Head) (10mm x 1.450")(Silicone On Threads) 2015-Up	1	
334778-1BK	Bolt Set, 8L90 Pump Cover (5 Pieces) 2015-Up	1	
334778BK	Bolt Set, 8L90 Stator Tube To Case (9 Pieces)(Hex Head) (13mm x 1.595" Long) 2015-Up	1	
334779BK	Bolt Set, 8L90 Pan To Case (15 Pieces)(10mm x 1.045"Long) (Hex Head) 2015-Up	1	
334781BK	Bolt Set, 8L90 Extention Houisng To Case (6 Pieces)(15mm x 1.970"Long)(Hex Head) 2015-Up	1	
334782BK	Bolt Set, 8L90 Valve Body To Case (11 Pieces)(Torx Plus) (4-TP10 x 1.928" & 7-TP10 x 2.823") 2015-Up	1	
334791BK	Bolt Set, 8L90 Fluid Baffle To Pump (2 Pieces)(E10 x 1.230"Lon 2015-Up	1	
334854B	Cushion, 8L90 1-2-7-8-Reverse Clutch (.082"Thick)(7 3/4"OD)(6 1/2"ID) 2015-Up	1	
334857B	Cushion, 8L90 1-2-3-4-5-Reverse Clutch (.105"Thick)(7 7/16"OD) (6 5/16"ID) 2015-Up	1	24268926
334861BA	Snap Ring, 8L90 Holds 4-5-6-7-8-Reverse Pressure Plate In Drum (1.75mm)(7 11/16"OD) 2015-Up	1	24259297
334861BB	Snap Ring, 8L90 Holds Pressure 4-5-6-7-8-Reverse Plate In Drum (2.11mm)(7 11/16"OD) 2015-Up	1	24259298
334861BC	Snap Ring, 8L90 Holds Pressure 4-5-6-7-8-Reverse Plate In Drum (2.46mm)(7 11/16"OD) 2015-Up	1	24259299
334861BD	Snap Ring, 8L90 Holds Pressure 4-5-6-7-8-Reverse Plate In Drum (2.82mm)(7 11/16"OD) 2015-Up	1	24259300
334861BE	Snap Ring, 8L90 Holds Pressure 4-5-6-7-8-Reverse Plate In Drum (3.18mm)(7 11/16"OD) 2015-Up	1	24259301
334861BG	Snap Ring, 8L90 Holds Pressure 4-5-6-7-8-Reverse Plate In Drum (3.89mm)(7 11/16"OD) 2015-Up	1	24259303
334862B	Snap Ring, 8L90 Holds 2-3-4-6-8 Piston In Drum (2.630"OD) (.081"Thick) 2015-Up	1	24261072
334866B	Snap Ring, 8L90 Holds Overdrive / Direct Sungear To Input Ring Gear (.038"Thick)(5.090"OD) 2015-Up	1	24271925
334867B	Snap Ring, 8L90 Holds Direct / Overdrive Hub To Ring Gear (.038"Thick)(Spiral)(4.765"OD) 2015-Up	1	24271926
334872B	Snap Ring, 8L90 Holds 2-3-4-6-8 Clutch Piston (Outer) In Drum 2015-Up	1	24270446
334876BA	Snap Ring, 8L90 Holds 1-3-5-6-7 Clutch Pressure Plate In (2.45mm Thick) (8 3/4"OD) 2015-Up.	1	24259246
334876BB	Snap Ring, 8L90 Holds 1-3-5-6-7 Clutch Pressure Plate In (2.79mm Thick) (8 3/4"OD) 2015-Up.	1	24259247
334876BC	Snap Ring, 8L90 Holds 1-3-5-6-7 Clutch Pressure Plate In (3.13mm Thick) (8 3/4"OD) 2015-Up.	1	24259248
334876BD	Snap Ring, 8L90 Holds 1-3-5-6-7 Clutch Pressure Plate In (3.47mm Thick) (8 3/4"OD) 2015-Up.	1	24259249
334876BE	Snap Ring, 8L90 Holds 1-3-5-6-7 Clutch Pressure Plate In (3.81mm Thick) (8 3/4"OD) 2015-Up.	1	24259250
334877B	Snap Ring, 8L90 1-3-5-6-7 Piston Spring (3.045"OD) (.068"Thick) 2015-Up	1	24272373
334878BA	Use 334861BA	1	24259297
334878BB	Use 334861BB	1	24259298
334878BC	Use 334861BC	1	24259299
334878BD	Use 334861BD	1	24259300
334878BE	Use 334861BE	1	
334880B	Snap Ring, 8L90 Input Shaft To 1-3-5-6-7 Drum (1.592"OD) (.047"Thick) 2015-Up.	1	24259259
334884B	Snap Ring, 8L90 Holds Reaction Sun Gear To Input Sun Gear (.098"Thick)(1.890"OD) 2015-Up	1	24269204
334885BA	Snap Ring, 8L90 Holds 1-2-3-4-5-Reverse Clutch In Case (1.91mm) (8 1/2"OD) 2015-Up	1	24259374
334885BB	Snap Ring, 8L90 Holds 1-2-3-4-5-Reverse Clutch In Case (2.25mm) (8 1/2"OD) 2015-Up	1	24259375
334885BC	Snap Ring, 8L90 Holds 1-2-3-4-5-Reverse Clutch In Case (2.59mm) (8 1/2"OD) 2015-Up	1	24259376
334885BD	Snap Ring, 8L90 Holds 1-2-3-4-5-Reverse Clutch In Case (2.92mm) (8 1/2"OD) 2015-Up	1	24259377
334885BE	Snap Ring, 8L90 Holds 1-2-3-4-5-Reverse Clutch In Case (3.26mm) (8 1/2"OD) 2015-Up	1	24259378
334886B	Snap Ring, 8L90 Holds Input Carrier To Drive Shell (.067" Thick)(4.995"OD) 2015-Up	1	24264113
334889B	Snap Ring, 8L90 Holds Reaction Planet To Ring Gear (.044"Thick)(5.917"OD)(Spiral) 2015-Up.	1	24259385
334890B	Snap Ring, 8L90 Holds Reaction Ring Gear To Hub (.071"Thick) (5.580"OD) 2015-Up	1	24266574
334893B	Snap Ring, 8L90 Holds 1-2-7-8- Reverse Piston Housing In Case (.100"Thick)(9 1/16"OD) 2015-Up	1	24259348
334895B	Snap Ring, 8L90 Holds 1-2-3-4-5-Reverse Piston Retainer In (.136"Thick)(2.886"OD) 2015-Up.	1	24270447
334896B	Snap Ring, 8L90 Pump Shaft To Rotor (.040"Thick)(.486"OD) 2015-Up	1	
334897B	C Clip, 8L90 Pump Shaft To Cover (.038"Thick) 2015-Up	1	
334960-1B	Piston, 8L90 2-3-4-6-8 Clutch (Inner)(5.927"OD) (Cast # 24259290) 2015-Up	1	24268946
334960B	Piston, 8L90 2-3-4-6-8 Clutch (Outer)(Aluminum)(6 5/16"OD) (Cast # 24268949) 2015-Up	1	24268949
334964B	Piston, 1-3-5-6-7 Clutch (Aluminum)(Cast # 24272226) 2015-Up	1	24272457

© Whatever It Takes Transmission Parts. Inc.

334965B	Piston, 8L90 4-5-6-7-8-Reverse Clutch (Aluminum) (Cast # 24268947) 2015-Up	1	24259290
334966B	Piston, 8L90 1-2-7-8-Reverse Clutch (Bonded)(7 3/4"OD)(Stepped) 2015-Up	1	24266762
334967B	Piston, 8L90 1-2-3-4-5-Reverse Clutch (Aluminum)(Cast # 24272512) (6 7/8"OD)(In Extention Housing) 2015-Up	1	24272457
334970B	Spring, 8L90 2-3-4-6-8 Clutch (Inner) Return (4.890"OD) (10 Fingers) 2015-Up	1	24261072
334974B	Spring/Retainer, 8L90 1-3-5-6-7 Clutch Piston (18 Springs)(5.120"OD)(.850"Thick) 2015-Up	1	24271657

PART #	HARDPARTS (Continued)	QTY	REFERENCE #
334975B	Spring, 8L90 2-3-4-6-8/ 4-5-6-7-8-Reverse Clutch Return (10 Fingers)(.066”Thick)(6 1/2”OD) 2015-Up	1	24266571
334976B	Spring, 8L90 1-2-7-8-Reverse Return (8 1/8D)(10 Fingers) 2015-Up	1	24259354
334977B	Spring, 8L90 1-2-3-4-5-Reverse Clutch Return (24 Springs)(4.945”OD) 2015-Up	1	24259368
334980B	Piston/Retainer, 8L90 2-3-4-6-8 Clutch (Inner)(5.443”OD) (Cast # 24268950 & 24268951) 2015-Up	1	24268950
334984B	Retainer, 8L90 1-3-5-6-7 Clutch Spring (Steel)(5.528"OD) 2015-Up	1	24265092
334985B	Retainer/Piston, 8L90 2-3-4-6-8 Clutch Piston (Outer)(Aluminum) (4.685"OD)(Cast # 24259279) 2015-Up	1	24259279
334987B	Retainer, 8L90 1-2-3-4-5-Reverse Clutch Piston (Aluminum)(5.040"OD) (Cast # 24260982) 2015-Up	1	24259369
334991-3B	Rooster Comb, 8L90 (.500"ID x 1.00" Long)(6 Detents) 2015-Up (1/2 Range Sensor)	1	
334991-4B	Shaft, 8L90 Manual Lever (3.863"Long)(.499"OD) 2015-Up	1	
334991-5B	Rollpin, 8L90 Manual Lever (1"Long)(.165"OD) 2015-Up (Holds Manual Lever To Case)	1	
334991-5BA	Rollpin, 8L90 Holds Rooster Comb To Manual Lever (1.50"Long) (.205"OD) 2015-Up	1	
334991-6B	Bracket, 8L90 Holds Park Rod (2 Bolt)(Cast # B6224) 2015-Up	1	
334994B	Park Rod Actuator, 8L90 (10 3/4" Long) 2015-Up	1	
334995B	Park Pawl Assembly, 8L90 Internal (3 Pieces) 2015-Up	1	

© Whatever It Takes Transmission Parts. Inc.

© Whatever It Takes Transmission Parts. Inc.

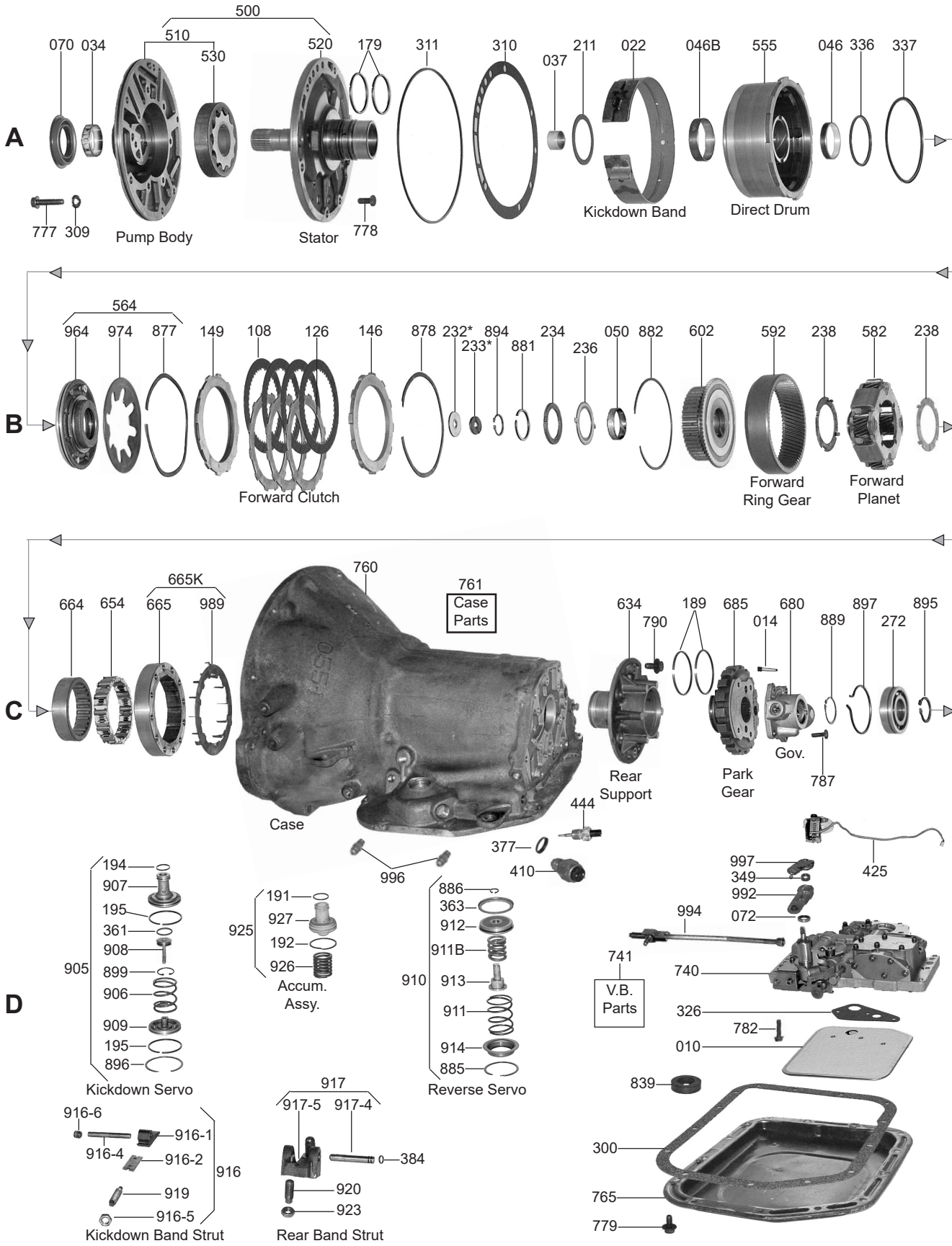
A
500
510
530
520
070
034
179
311
310
037
211
022
046B
555
046
336
337
777
309
Pump Body
Stator
778
Kickdown Band
Direct Drum
B
564
964
974
877
149
108
126
146
878
232*
233*
894
881
234
236
050
882
602
592
238
582
238
Forward Clutch
Forward Ring Gear
Forward Planet
C
665K
664
654
665
989
760
761
Case Parts
634
790
189
685
014
680
889
897
272
895
Case
Rear Support
Park Gear
Gov.
787
444
377
410
996
425
997
349
992
072
994
741
V.B. Parts
740
326
782
010
839
300
765
779
D
194
907
195
361
908
905
899
906
909
195
896
Kickdown Servo
191
927
925
192
926
Accum. Assy.
886
363
912
911B
910
913
911
914
885
Reverse Servo
917
917-5
917-4
384
920
923
Rear Band Strut
916-6
916-1
916-4
916-2
916
919
916-5
Kickdown Band Strut

00
R Kit
02
K Kit
04
L/Steels
t
06
W/Steels
t
11
r Kit
30
ing Kit
19
Module
39
Module
65
Kits
75
g Kit
00
er Kit
01
ng Kit
90
Seal Kit
00
Manual

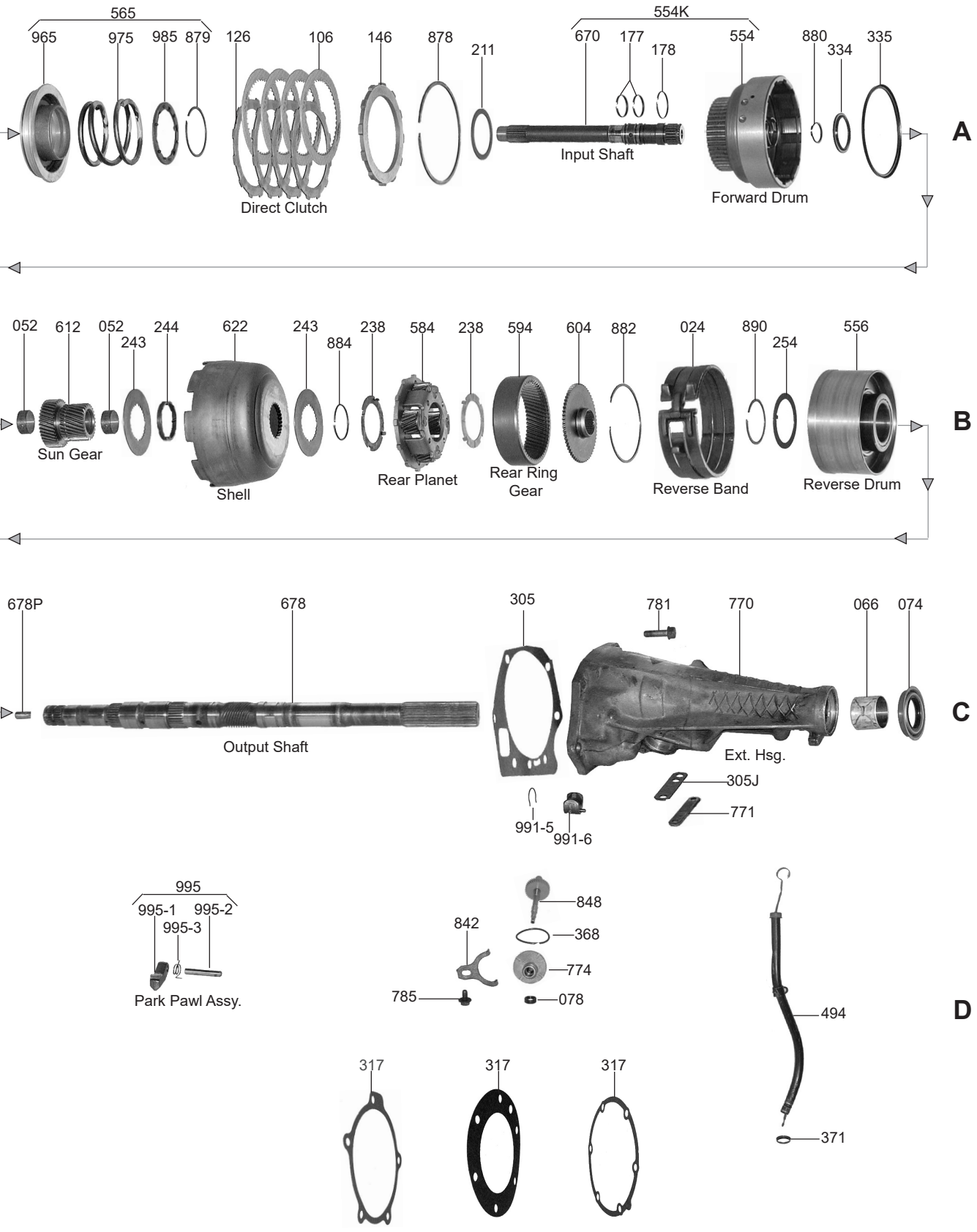

CHRYSLER

© Whatever It Takes Transmission Parts. Inc.

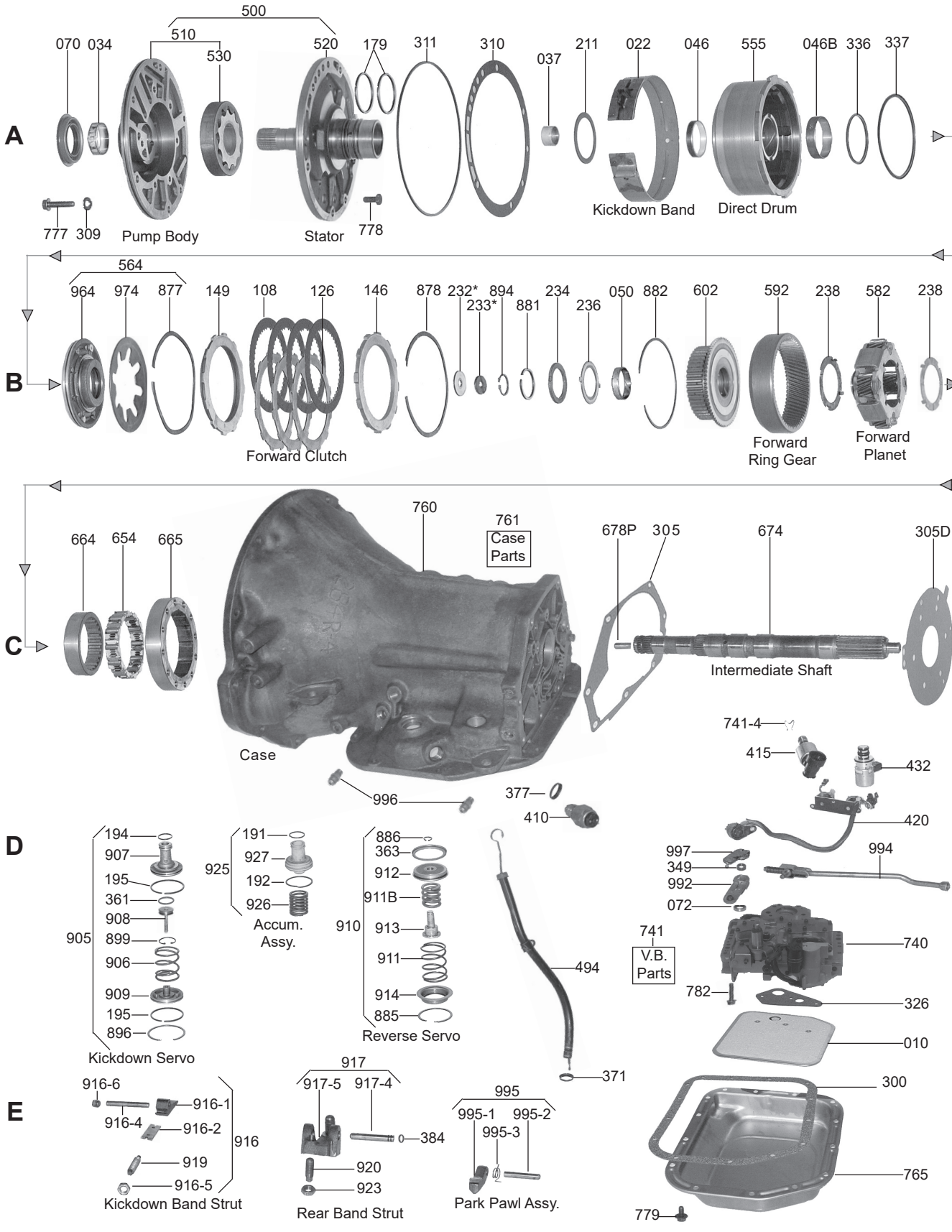
A
500
510
530
520
070
034
179
311
310
037
211
022
046
555
046B
336
337
777
309
Pump Body
Stator
778
Kickdown Band
Direct Drum
B
564
964
974
877
149
108
126
146
878
232*
233*
894
881
234
236
050
882
602
592
238
582
238
Forward Clutch
Forward Ring Gear
Forward Planet
C
664
654
665
760
761
Case Parts
678P
305
674
305D
Intermediate Shaft
Case
996
377
410
741-4
415
432
420
997
349
992
072
994
741
V.B. Parts
740
782
326
010
300
765
779
D
194
907
195
361
908
905
899
906
909
195
896
Kickdown Servo
191
927
925
192
926
Accum. Assy.
886
363
912
911B
910
913
911
914
885
Reverse Servo
494
371
E
916-6
916-1
916-4
916-2
916
919
916-5
Kickdown Band Strut
917
917-5
917-4
384
920
923
Rear Band Strut
995
995-1
995-2
995-3
Park Pawl Assy.

40RH / 42RH / 42RE / 44RE (A500)

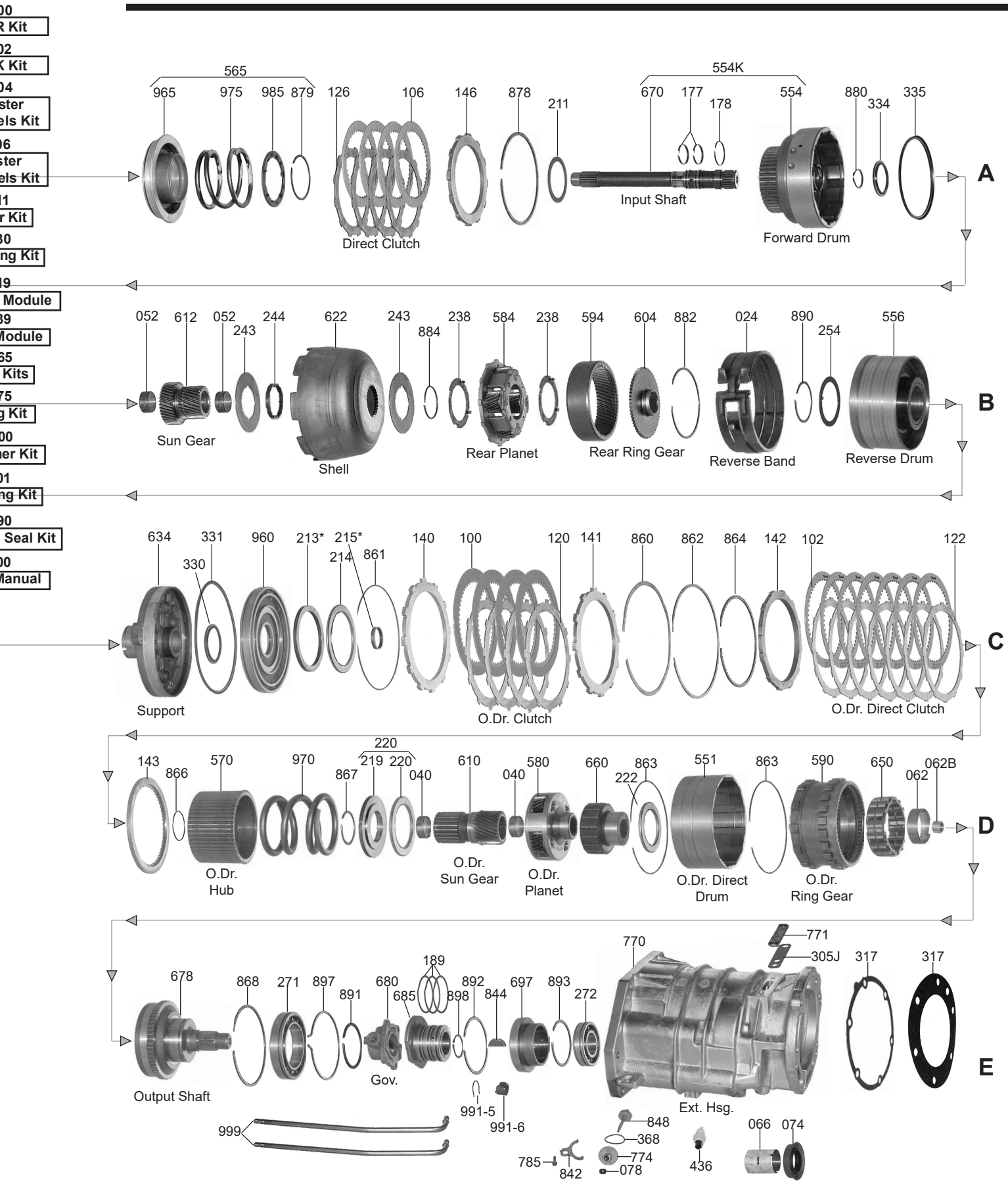

© Whatever It Takes Transmission Parts. Inc.

PART #	PAPER & RUBBER KIT	QTY	REFERENCE #
12000A	Paper & Rubber Kit, A904 1960-71	1	
12000C	Paper & Rubber Kit, A904 (Except Colt, Arrow) 1972-Up	1	
12000D	Paper & Rubber Kit, A904 (Colt, Arrow)	1	
12000E	Paper & Rubber Kit, A500 1988-Up	1	

PART #	OVERHAUL KITS	QTY	REFERENCE #
12002A	Overhaul Kit, A904 1960-71	1	
12002C	Overhaul Kit, A904 (Except Colt, Arrow) 1972-Up (For 4x4 Sell 12074J)	1	
12002D	Overhaul Kit, A904 (Colt, Arrow)	1	
12002E	Overhaul Kit, A500 1988-Up	1	

PART #	MASTER L/STEEL KIT	QTY	REFERENCE #
12004A	Master L/Steels Kit, A904 1960-71	1	
12004C	Master L/Steels Kit, A904 (Except Colt, Arrow) 1972-Up (For 4x4 Sell 12074J)	1	
12004D	Master L/Steels Kit, A904 (Colt, Arrow)	1	
12004E	Master L/Steels Kit, A500 1988-Up	1	

PART #	MASTER W/STEEL KIT	QTY	REFERENCE #
12006A	Master W/Steels Kit, A904 1960-71	1	
12006C	Master W/Steels Kit, A904 (Except Colt, Arrow) 1972-Up (Except 1999-04 Jeep)(For 4x4 Sell 12074J Also)	1	
12006CA	Master W/Steels Kit, A904 1999-04 (Jeep Only)(Has V Notched Direct Steels)	1	
12006D	Master W/Steels Kit, A904 (Colt, Arrow)	1	
12006E	Master W/Steels Kit, A500 1988-Up (Except 1999-04 Jeep)	1	
12006EA	Master W/Steels Kit, A500 1999-04 (Jeep Only)(Has V Notched Direct Steels)	1	

PART #	FILTER	QTY	REFERENCE #
12010A	Filter, A904 Small Dacron (2 Hole)	1	3621456
12010B	Filter, A904 Small Brass	1	3410253
12010C	Filter, A904/A727/A500/A518 Large Dacron 1966-03 (2 Hole)(SPX)	1	3515996
12010D	Filter, A904/A500 Large Brass 1966-03	1	
12010J	Filter, A500 1998-Up (Metal & Plastic)	1	52118789

PART #	FILTER KIT	QTY	REFERENCE #
12011A	Filter Kit, A904 Small Dacron Filter	1	
12011B	Filter Kit, A904 Small Brass Filter	1	
12011C	Filter Kit, A904 Large Dacron Filter	1	
12011D	Filter Kit, A904 Large Brass Filter	1	
12011E	Filter Kit, A904/A500 Combo Small Dacron Filter	1	
12011G	Filter Kit, A904/A500 Combo Large Dacron Filter	1	
12011H	Filter Kit, A904 (Colt, Arrow) Large Dacron Filter	1	

PART #	MISC. FILTERS	QTY	REFERENCE #
12014	Filter, A904 Governor	1	3743519
12018	Screen, A904/A500 Valve Body Regulator Feed Line	1	
12484	Orifice Screen, A500 Overdrive Piston Retainer	1	4412583

PART #	BANDS	QTY	REFERENCE #
12022A	Band, A904 Kickdown Rigid (1.750” Wide) (360 Engine)	1	3681921
12022AA	Band, A904 Kickdown Flex (1.375” Wide) 1977-91	1	4419646
12022AAS	Band, A904 Kickdown Flex (1.375” Wide) (Snap) 1977-91	1	
12022AB	Band, A904 Kickdown Rigid (1.375” Wide) 1961-78	1	2204792
12022AC	Band, A904/A500 Kickdown Flex (1.375” Wide) Kevlar Lining	1	4419646
12022AD	Band, A500 Kickdown Semi-Rigid (1.375” Wide) 1989-91	1	4531221
12022B	Band, A904/A500 Kickdown Semi-Rigid (1.610” Wide) 1992-Up	1	4617849
12022BA	Band, A904/A500 Kickdown Flex (1.610” Wide) 1992-Up	1	
12022BK	Band, A904/A500 Kickdown Semi-Rigid (1.610” Wide) 1992-Up (Raybestos Pro Series)	1	
12024	Band, A904 Reverse Rigid	1	4443187
12024A	Band, A904/A500 Reverse Double Wrap	1	4443184

© Whatever It Takes Transmission Parts. Inc.

PART #	BUSHINGS	QTY	REFERENCE #
12030	Bushing Kit, A904 1960-65	1	
12030B	Bushing Kit, A904/A500 (W/Out Overdrive Section) 1968-E92	1	
12030BA	Bushing Kit, A904/A500 (W/Out Overdrive Section) L1992-Up	1	
12030E	Bushing Kit, A500 (Overdrive Section Only) 1988-Up	1	
12030EB	Bushing Kit, A500 Complete W/Overdrive Section 1988-E92	1	
12030EC	Bushing Kit, A500 Complete W/Overdrive Section L1992-E99	1	
12030ED	Bushing Kit, A500 Complete W/Overdrive Section L1999-Up	1	
12034	Bushing, A904/A500 Pump Body (Babbit)	1	2204953
12034A	Bushing, A904/A500 Pump Body (Bronze)	1	2466796
12034D	Bushing, 904/A500 Pump Body (Enhanced W/CT-101 Dry Lubricant)(W/Indents For Better Oil Retention)	1	
12037	Bushing, A904 Stator 1968-77	1	2801728
12037A	Bushing, A904/A500 Stator 1978-Up	1	4058635
12040	Bushing, A500 Overdrive Sun Gear (Rear) No Flange (1.42”OD) (Also Same As The Front Bushing W/No Flange 88-99)	2	
12040A	Bushing, A500 Overdrive Sun Gear (Front) W/Flange (1.42”OD) 1989-99	1	
12040B	Bushing, A500 Overdrive Sun Gear (Front) No Flange (1.50”OD) 1999-Up	1	
12046	Bushing, A904/A500 Direct Drum (Rear) 1968-E92	1	2801727
12046B	Bushing, A904/A500 Direct Drum (Front) L1992-Up	1	4617157
12046C	Bushing, A904/A500 Direct Drum (Rear) L1992-Up	1	4617159
12050	Bushing, A904/A500 Front Gear Hub 1976-Up	1	3681967
12052	Bushing, A904/A500 Sun Gear	2	1942436
12062	Bushing, A500 Output Shaft To Overdrive Sprag Race (2.144”ID) 1989-Up	1	4461006
12062B	Bushing, A500 Output Shaft To Intermediate Shaft (.605”ID) 1989-Up	1	4461007
12062BB	Bushing, A500 Output Shaft To Intermediate Shaft (.605”ID)(Bronze)1989-Up	1	
12066	Bushing, A904 Extension Housing (1.560”ID)(1.380” Long) 1966-Up	1	2538525
12066A	Bushing, A904 Extension Housing, 1960-65	1	2124607
36066	Bushing, A500 Extension Housing 1988-Up (1.690”ID)(Bronze)	1	
36066T	Bushing, A500 Extension Housing 1988-Up (1.690”ID)(Teflon Coated)	1	

PART #	METAL CLAD SEALS	QTY	REFERENCE #
12070	Seal, A904/A500 Front (Without Flange) (.363” Thick)	1	4269057
12070A	Seal, A904/A500 Front (With Flange) (.363” Thick)	1	
22072	Seal, A904/A500 Manual Shaft (1/4” Thick)	1	
22072A	Seal, A904/A500 Manual Shaft (3/8” Thick)	1	
12074A	Seal, A904 Rear (1.692”OD) 1960-65	1	
12074B	Seal, A904 Rear W/Boot 1966-72	1	2400163
12074D	Seal, A904/A500 Rear W/Boot 1973-Up	1	3515384
12074E	Seal, A904/A500 Rear W/Out Boot 1973-Up	1	
12074EA	Seal, A904 Rear W/Out Boot 1966-72	1	
12074J	Seal, A904/A500 Extension Housing 4x4 (2.568”OD)	1	
12074M	Seal, A904 Extension Housing (Mitsubishi, Dodge, D-50)	1	
36074	Seal, A500 Rear W/Out Boot 1988-Up	1	
36074B	Seal, A500 Rear W/Boot 1988-Up	1	
44078A	Seal, A904 Speed-O Shaft W/Spring	1	25519078

PART #	FRICTION CLUTCH	QTY	REFERENCE #
12100	Friction, A500 Overdrive Clutch (.087”) (Flat) 1988-Up	2-4	4461045
12100A	Friction, A500 Overdrive Clutch (.087”) (Waved) 1990-Up Hi-Energy (Retro Fits Early)	4-5	4461181
12100H	Friction, A500 Overdrive Clutch (.087”)(FLat)(GPZ) 1988-Up	4-5	
12102	Friction, A500 Overdrive Direct Clutch (.063”) 1988-Up	6-8	4461042
12106	Friction, A904/A500 Direct Clutch (.086”) (Waffle) 1960-Up	3-5	4329805
12106A	Friction, A904/A500 Direct Clutch (.086”) (Hi-Energy) Kevlar 1960-Up	3-5	
12106HP	Friction, A904/A500 Direct Clutch (.086”) (Hi-Performance) 1960-Up	3-5	
12106HPK	Friction Kit, A904/A500 Direct (.086”) (Hi-Performance)(4 Per Kit)	1	
12108	Friction, A904/A500 Forward Clutch (Rear) (.061”) (Smooth) 1960-Up	3-4	3780285
12108A	Friction, A904/A500 Forward Clutch (Rear) (.061”) (Hi-Energy)	3-4	
12108HP	Friction, A904/A500 Forward Clutch (Rear) (061”) (Hi-Performance) 1960-Up	3-4	
12108HPK	Friction Kit, A904/A500 Forward (.061”) (Hi-Performance)(4 Per Kit)	1	
12119C	Friction Module, A904 1960-Up	1	
12119CHP	Friction Module, TF6/A904 Blue Plate Special (Raybestos) 1960-Up	1	
12119E	Friction Module, A500 1988-Up	1	

© Whatever It Takes Transmission Parts. Inc.

PART #	STEEL CLUTCH	QTY	REFERENCE #
12120	Steel, A500 Overdrive Clutch (.068") 1988-Up	2-3	4461047
12120HP	Steel, A500 Overdrive Clutch (.068")(Kolene) 1988-Up	2-3	
12122	Steel, A500 Overdrive Direct Clutch (.069") 1988-Up	5-7	4461054
12122HP	Steel, A500 Overdrive Direct Clutch (.069") 1988-Up (Kolene)	5-7	
12122A	Steel, A500 Overdrive Direct clutch (.054") 1996-Up	5-7	
12122AHP	Steel, A500 Overdrive Direct Clutch (.054)(Kolene) 1996-Up	5-7	
12126	Steel, A904/A500 Forward / Direct Clutch (.068") 1960-Up	7-8	1942403
12126A	Steel, A904/A500 Forward / Direct Clutch (.068") 1960-Up (Kolene)	7-8	
12126D	Steel, A904/A500 Direct Clutch (.068") (W/2 V-Notched Teeth) 1999-Up	5	
12126DA	Steel, A904/A500 Direct Clutch (.085") (W/2 V-Notched Teeth) 1999-Up	4	
12126X	Steel, A904/A500 Forward / Direct Clutch (.088") (Oversized) 1960-Up	AR	
12139	Steel Module, A904	1	
12139E	Steel Module, A500	1	

PART #	CLUTCH PRESSURE PLATES	QTY	REFERENCE #
12140	Pressure Plate, A500 Overdrive Clutch (.373")(Front)(Flat) 1988-92 (For 1993-Up Use 12141)	1	4461048
12141	Pressure Plate, A500 Overdrive Clutch (.216")(Rear)(Flat) 1988-99 (Also Fits Overdrive Clutch (Front) (#140) 1993-99)	1	4461033
12142	Pressure Plate, A500 Overdrive Direct Clutch (Front) (.212" Thick On Edge)(Stepped)	1	4461031
12142A	Pressure Plate, A500 Overdrive Direct Clutch (Front) (.085" Thick On Edge)(Stepped)	1	
12143	Pressure Plate, A500 Overdrive Direct Clutch (Rear) (.215")	1	4461030
12146	Pressure Plate, A904/A500 Forward / Direct Clutch (Flat)	1	4617176
12146D	Pressure Plate, A904/A500 Direct (.216") (W/2 Missing Teeth) 1999-Up	1	
12149	Pressure Plate, A604/A500 Forward Clutch (Beveled)	1	2466281

PART #	VALVE BODY KITS	QTY	REFERENCE #
S22165	Valve Body Kit, A904 (Superior)	1	KTF-TC
T22165	Valve Body Kit, A904 (No Yo-Yo) (Transgo)	1	SK® TFSC
S22167	Valve Body Kit, A500 (Gas/Diesel) Superior 1989-98 (Can Use S22167A)	1	
T22167	Valve Body Kit, A500 Jr. (Gas Only) (Transgo) 1989-Up (For 48RE 2003-Up Use T22165G)	1	SK® TFOD
S22167A	Valve Body Kit, A500 (Gas/Diesel) (Superior) 1999-03	1	K500-618-L
T22169	Reprogramming Kit, A904 (Heavy Duty & Hi-Performance) (Transgo)	1	TF-1
T22169B	Reprogramming Kit, A500 (Heavy Duty & Hi-Performance) (Transgo) (Will Not Work On 2003-Up 48RE, Sell T22165G)	1	TFOD-HD2
A22171	Valve Body Kit, A904 (Fairbanks) 1962-Up	1	10430
T22171	Reprogramming Kit, A904 (Full Race) (Transgo)	1	TF-2
A22171B	Valve Body Kit, A500 (Transaction Kit) (Fairbanks) 1989-98	1	10518
T22173	Reprogramming Kit, A904 (Manual Shift) (Transgo)	1	TF-3
T22173B	Reprogramming Kit, A500 (Manual Shift) (Transgo)	1	TFOD-3

PART #	OIL SEALING RINGS	QTY	REFERENCE #
12175	Ring Kit, A904 Complete 1960-77	1	
12175B	Ring Kit, A904 Short 1960-Up	1	
12175C	Ring Kit, A904 Complete 1967-95	1	
12175CT	Ring Kit, A904 Complete (Teflon) 1967-Up	1	
17175D	Ring Kit, A904 Colt	1	
12175E	Ring Kit, A500 1988-Up	1	
12175ET	Ring Kit, A500 (Teflon) 1988-Up	1	
12177	Ring, A904 Input Shaft (Butt Joint) (1.062"OD) (Metal) 1960-67	2	1941831
12177A	Ring, A904/A500 Input Shaft (Lock Joint) (1.062"OD) (Metal) 1968-Up	1-2	1401221
12177AT	Ring, A904/A500 Input Shaft (1.062"OD) (Teflon) 1968-Up	1-2	4269592
12178A	Ring, A904 Rear Clutch Drum (Forward) (1.500"OD) (Metal) 1968-77	1	1323593
12178B	Ring, A904/A500 Rear Clutch Drum (Forward) (1.560"OD) (Metal) 1978-Up	1	4028333
12178BT	Ring, A904/A500 Rear Clutch Drum (Forward)(1.560"OD)(Teflon) 1978-Up	1	
12179	Ring, A500 Stator Support (2.062"OD) (Metal) 1988-Up	2	1942389
12179A	Ring, A500 Stator Support (2.062"OD) (Metal, Seal Plated) 1988-Up	2	4471874
12189	Ring, A904 Governor (2.250"OD) (Butt Joint) (Metal) 1962-Up	2-3	1942109
12189A	Ring, A904 Governor (2.250"OD) (Lock Joint) (Metal) 1962-Up	2-3	2892358
12189B	Ring, A500 Governor (Metal) 1989-Up	2-3	
12191	Ring, A904 Accumulator Piston (Small) (1.062"OD) 1960-86 (Use 12177A)	1	1401221
12191A	Ring, A904/A500 Accumulator Piston (Small) (Metal) 1987-Up	1	3743010
12191C	Ring, A500 3-4 Accumulator Piston (Small, In Valve Body) 1989-Up	1	
12192	Ring, A904/A500 Accumulator Piston (Large) (2.00"OD) (Metal)	1	1315158
12192T	Ring, A904/A500 Accumulator Piston (Large) (2.00"OD) (Teflon)	1	
12192C	Ring, A500 3-4 Accumulator Piston (Large, In Valve Body) 1989-Up	1	3743013

© Whatever It Takes Transmission Parts. Inc.

12194	Ring, A904 Kickdown Servo Piston (1.00”OD) (Metal) 1971-Up	1	3410374
12194A	Ring, A904 Kickdown Servo Piston (1.25”OD) (Metal) 1960-Up	1	1672287
12195	Ring, A904 Kickdown Servo Piston & Cover (Large 2.375”OD) (Metal) 1971-Up	2	3410372
12195A	Ring, A904 Kickdown Servo Piston & Cover (Large 2.125”OD) (Metal) 1971-Up	2	1636470
12195B	Ring, A500 Kickdown Servo Piston & Cover (Large 2.560”OD) (Metal) 1989-Up	2	4295966

PART #	WASHERS & BEARINGS	QTY	REFERENCE #
12200	Washer Kit, A904 1968-74	1	
12200A	Washer Kit, A904 (W/Out Selectives) (9 Washers) 1974-Up	1	
12200AA	Washer Kit, A904 (W/Selectives) (12 Washers) 1979-89	1	
12200AB	Washer Kit, A904 1960-67	1	
12200B	Washer Kit, A500 (W/Out Selectives) 1988-Up (Does Not Have 12238C)	1	
12201A	Bearing Kit, A500 1989-Up (Torrington)	1	
12211	Washer, A904/A500 Direct Drum (Front & Rear) (Fiber) (.062”) 1971-Up	2	3410572
12211A	Washer, A904/A500 Direct Drum (Front & Rear) (Fiber) (.042”) 1960-70	2	
12213	Race, A500 Overdrive Piston To Hub (.108”)	1	4431730
12213A	Race, A500 Overdrive Piston To Hub (.123”)	1	4431585
12213B	Race, A500 Overdrive Piston To Hub (.138”)	1	4431731
12213C	Race, A500 Overdrive Piston To Hub (.155”)	1	4431586
12213D	Race, A500 Overdrive Piston To Hub (.168”)	1	4431732
12213E	Race, A500 Overdrive Piston To Hub (.183”)	1	4431587
12213G	Race, A500 Overdrive Piston To Hub (.198”)	1	4431733
12213H	Race, A500 Overdrive Piston To Hub (.213”)	1	4431588
12213HA	Race, A500 Overdrive Piston To Hub (.228”)	1	4431734
12213J	Race, A500 Overdrive Piston To Hub (.243”)	1	4431590
S12213K	Race Kit, A500 Overdrive Piston To Hub (Sonnax) (Contains: One .170” Thick Race, Two .005” Thick Shims, And One .010” Thick Shim)	1	12783-01K
12214	Bearing, A500 Overdrive Piston To Hub	1	4446742
12215	Spacer, A500 Intermediate Shaft To Overdrive Planet (.158”)	1	4431916
12215A	Spacer, A500 Intermediate Shaft To Overdrive Planet (.175”)	1	4431917
12215B	Spacer, A500 Intermediate Shaft To Overdrive Planet (.193”)	1	4431918
12215C	Spacer, A500 Intermediate Shaft To Overdrive Planet (.211”)	1	4431919
12219	Race, A500 Overdrive Planet To Hub	1	4461120
12220	Bearing & Race, A500 Overdrive Planet To Hub (Updated)	1	4740774
12221	Bearing, A500 Overdrive Planet To Hub (3.210”OD) (Use 12222 or 12220)	1	4461014
12221A	Bearing, A500 Overdrive Planet To Hub (3.853”OD) (Can Use 12220)	1	
12222	Bearing, A500 Overdrive Inner Sprag Race To Output Shaft (3.210”OD)	1	4461014
12232	Race, A904/A500 Output Shaft Cup 1979-Up	1	4058982
12232A	Washer, A904 Output Shaft Plate Cup Race	1	4505188
12232D	Washer, A904/A500 Output Shaft (3 Outer Tabs) (.052”) 1990-Up	1	4505185
12232DA	Washer, A904/A500 Output Shaft (3 Outer Tabs) (.068”) 1990-Up	1	4505186
12232DB	Washer, A904/A500 Output Shaft (3 Outer Tabs) (.083”) 1990-Up	1	4505187
12232DS	Shim Kit, A500 (Goes Under # 232 Washer)(3 Each .015” & .025” Shims)(Superior)	1	
12233A	Washer, A904 Output Shaft (.052”) (Fiber) 1960-75	1	2538669
12233AA	Washer, A904 Output Shaft (.068”) (Fiber) 1960-75	1	2466169
12233AB	Washer, A904 Output Shaft (.083”) (Fiber) 1960-76	1	2538671
12233B	Washer, A904 Output Shaft (.052”) 1976-78	1	3878777
12233BA	Washer, A904 Output Shaft (.068”) 1976-78	1	3878778
12233BB	Washer, A904 Output Shaft (.083”) 1976-78	1	3878779
12233C	Washer, A904/A500 Output Shaft (.052”) (2 Inner Tabs) 1979-Up	1	4269196
12233CA	Washer, A904/A500 Output Shaft (.068”) (2 Inner Tabs) 1979-Up	1	4269197
12233CB	Washer, A904/A500 Output Shaft (.083”) (2 Inner Tabs) 1979-Up	1	4269198
12233D	Race, A904/A500 Output Shaft 1990-Up (Used With 12232D/DA/DB)	1	4505188
12234	Washer, A904 Forward Drum To Hub (1 5/8”ID) 1960-72	1	2538696
12234A	Washer, A904/A500 Forward Drum To Hub (1 Tab) 1973-Up	1	3681969
12236A	Race, A904/A500 Forward Drum Washer To Hub (2 Tab)	1	4617775
12238A	Washer, A904/A500 3 Gear Front & Rear Planet (Both Sides) (3 Outer Tangs)	4	3743027
12238B	Washer, A904 4 Gear Front & Rear Planet (4 Outer Tangs) (Tang OD is 2 3/4”)	4	3681935
12238C	Washer, A904/A500 4 Gear Large Front Planet (Both Sides) (4 Inner Tangs)	2	4130518
12238D	Washer, A904 4 Gear Front & Rear Planet (Aluminum Planet) 1 Side (4 Outer Tangs) (Tang OD Is 3 1/8”)	2	2538515
S12239AK	Shim Kit, A904/A500 (Goes Under # 238) (10 Per Kit) Sonnax	1	12780-Z
12243	Race, A904/A500 Driving Shell (2.690”OD)(28 Teeth)	1	3681959
12243A	Race, A904/A500 Driving Shell (3.440”OD)(38 Teeth)	1	4471566
12244	Spacer, A904/A500 Sungear Bowl (For Large Planet)	1	4130736
12254	Washer, A904/A500 Rear Drum To Snap Ring (1 Tab) 1988-E92	1	4431435
12271	Ball Bearing, A500 Output Shaft (Front) (2.750”ID) (W/Snap Ring Groove)	1	4461008
12271-1	Shim, A500 Sets Behind Bearing #271 To Take Up Excessive End Play (.060”Thick)	1	
12272	Ball Bearing, A904 Output Shaft (Rear) (1.150”ID) (W/Snap Ring Groove)	1	3410465

© Whatever It Takes Transmission Parts. Inc.

PART #	WASHERS & BEARINGS (Continued)	QTY	REFERENCE #
12272A	Ball Bearing, A904 Output Shaft (Rear) (1.230"ID) (W/Snap Ring Groove)	1	
22272E	Ball Bearing, A500 Output Shaft (Rear) (2.835"OD)(1.375"ID) Has No Snap Ring Groove	1	

PART #	GASKETS & RUBBER COMPONENTS	QTY	REFERENCE #
12300	Gasket, A904/A500 Pan (14 Holes)	1	4295875
12300D	Gasket, A904 Pan (Small Pan)(14 Holes)(Colt/Arrow)	1	3681438
12305A	Gasket, A904 Extension Housing 1966-Up	1	2466954
12305AE	Gasket, A500 Extension Housing 1989 (Also Fits Under Overdrive Piston Retainer)	1	4471564
12305AF	Gasket, A500 Extension Housing 1990-Up	1	4531192
12305C	Gasket, A500 Overdrive Piston Retainer To Case 1990-Up (Can Use This Gasket & 12305AF Gasket For 1989 Models)	1	
12305J	Gasket, A904/A500 Output Shaft Bearing Cover	1	2666049
12310C	Gasket, A904/A500 Front Pump (14 Hole) (Retro Fits Early)	1	52118266
12311	O-Ring, A904/A500 Front Pump	1	2204709
12325A	Gasket, A500 Lock-Up & Overdrive Solenoid 1988-97	1	
12325B	Gasket, A500 Lock-up & Overdrive Solenoid 1998-Up	1	
12325C	Gasket, A500 Governor Pressure Solenoid 1988-Up	1	
12326	Gasket, A904/A500 Filter	1	
12330	Lip Seal, A500 Overdrive Clutch Piston (Inner)	1	
12331	Lip Seal, A500 Overdrive Clutch Piston (Outer)	1	
12334	Lip Seal, A904/A500 Forward Clutch Piston (Inner) 1968-Up	1	2538510
12334A	Lip Seal, A904 Forward Clutch Piston (Inner) 1960-67	1	2125187
12335	Lip Seal, A904/A500 Forward Clutch piston (Outer) 1968-Up	1	2538695
12336	Lip Seal, A904/A500 Direct Clutch Piston (Inner) 1972-Up	1	3515176
12336A	Lip Seal, A904 Direct Clutch Piston (Inner) 1960-71	1	1942396
12336B	Lip Seal, A904/A500 Direct Clutch Piston (Inner) (VAMAC) 1972-Up	1	
12337	Lip Seal, A904/A500 Direct Piston (Outer) 1972-98	1	4085487
12337A	Lip Seal, A904 Forward / Direct Clutch Piston (Outer) 1960-71	2	1942397
12337B	Lip Seal, A904/A500 Direct Clutch Piston (Outer) 1999-Up (This Seal Sets In The Drum and Rides On the OD Of The Piston)	1	
12347	O-Ring, A500 Electric Connector (15/16" Connector)	2	
12347A	O-Ring, A500 Electric Connector (1 1/16" Connector)	2	
12349	Seal, A904/A500 Throttle Lever Shaft	1	2466548
12354AK	D-Ring Set, A904/A500 Accumulator (2 D-Rings) 1960-Up	1	
S12354AK	Seal Ring/D-Ring Set, A904/A500 Accumulator (For Sonnax Accumulator Kit S12927HD) (Contains: 2 D-Rings And 2 PTFE Sealing Rings)(Sonnax)	1	
12363A	Lip Seal, A904 Reverse Servo Piston Seal 1989-Up	1	2464462
12363AA	Lip Seal, A500 Reverse Servo 1989-Up	1	
12363D	Lip Seal, A904 Reverse Servo Piston Seal (Colt, Arrow)	1	4269736
12368	O-Ring, A904/A500 Speed-O Housing (Red) 1966-Up	1	6031370
12368A	O-Ring, A904 Speed-O Adapter 1960-65	1	1363951
12369	Lip Seal, A904 Speed-O Shaft To Housing 1966-76	1	
12369A	Lip Seal, A904 Speed-O Gear Cable (Plastic Housing) 1977-89	1	
12371	Boot, A904/A500 Filler Tube 1997-Up	1	52118629
44371A	O-Ring, A904/A500 Filler Tube	1	6264902
12377	O-Ring, A904 Neutral Switch 1960-65	1	1316849
12377A	Gasket/Washer, A904/A500 Neutral Safety Switch 1969-2000	1	2408143
12390	External Seal Kit, A904 1966-Up	1	

PART #	TECHNICAL MANUALS	QTY	REFERENCE #
12400	Technical Manual, A904	1	83-727904TM
12400E	Technical Manual, A500	1	83-500TM
12400EA	Technical Manual, A500SE (42RE) (Cherokee, Wagoneer)	1	TM42RE
12407A	Technical Video, A500 (Includes Manual)	1	83-SGTV-20

PART #	ELECTRICAL COMPONENTS	QTY	REFERENCE #
12410	Neutral Switch, A904 (3 Prong, Long) 1969-Up	1	2932820
12410A	Neutral Switch, A904/A500 (Screw In)(3 Prong, Short) (Push On Connector) 1969-Up	1	4057750
12410B	Neutral Switch, A904/A500 (Screw In)(3 Prong, Short) (Clip On Connector) 1996-03	1	
12410C	Neutral Switch, A500/A518/A618/48RE (Push-In)(5 Prong) 6/2002-Up (Cast # 56045489AC) Square Body(2 Bolt)	1	
12415A	Sensor, A500 Governor Pressure (3 Pin) 1989-95 (Transducer)	1	56027562
12415B	Sensor, A500 Governor Pressure (4 Pin Round Connector)(Transducer)(With TFT) 1996-99	1	56041403AA
12415C	Sensor, A500 Governor Pressure (4 Blade Rectangular Connector) (Black Plastic) (Transducer) (With TFT) 2000-Up	1	56028196AD

© Whatever It Takes Transmission Parts. Inc.

12415CHP	Sensor, A500 Governor Pressure (4 Blade Rectanglar Connector)(High Performance) 2000-Up	1	
12420	Solenoid, A500 Overdrive & Lock-Up (3 Pin Case Connector)(With TFT) 1988-95	1	4431954
12420B	Solenoid, A500 Overdrive & Lock-Up (8 Pin Case Connector) (W/4 Pin Oval Governor Sensor Connector) 1996-99	1	52118652
12420BK	Solenoid Kit, A500 Overdrive & Lock-Up (8 Pin Case Connector) (W/4 Pin Governor Sensor) 1993-99 (Will Retro Fit 3 Pin Governor Sensor)	1	
12420C	Solenoid, A500 Overdrive & Lock-Up (8 Pin Case Connector) (With 4 Blade Rectangle Governor Sensor Connector) 2000-Up	1	52118500
12425	Solenoid, A904 Lock-Up (1 Wire) L1987-Up	1	4348719
12425AA	Solenoid, A904 Lock-Up (2 Wire) 1996-Up	1	
12432A	Solenoid, A500 Governor Pressure 1994-Up (Most)	1	4617210
12432AK	Repair Kit, A500 Governor Pressure Solenoid 1994-Up (Transgo) (Fixes 8 Solenoids)	1	
12432BK	Conversion Kit, A500 Governor Solenoid (Converts The Governor Solenoid To The GM # 34435B Solenoid)(Contains: Solenoid With Adapter Harness, Manifold Block, 4 Bolts & Gasket) 1994-Up	1	
92436	Sensor, A500SE (42RE) Output Speed Sensor (.928"OD Threads)	1	4800879
12444A	Connector, A904 Case (Pass Thru) (1 Wire) L1987-Up	1	
12444B	Connector, A904 Case (Pass Thru) (2 Wire) 1996-Up	1	
12445AK	Repair Kit, A500/42RE/42RH/44RE Neutral Safety Swith (3 Pin) 1988-04	1	
12445BK	Repair Kit, A500 External Wire Harness (8 Pin Connector W/8 Crimp Style Connectors) 1993-Up (Rostra)	1	
12445A	Wire Harness, A500 External Lock-Up Eliminator	1	83506534
12447	Recalibrator, Chrysler Electronic Speedometers	1	RECAL-CH
12447A	Inverter, A500 Overdrive	1	

PART #	MISC. COMPONENTS	QTY	REFERENCE #
12483P	Park Reaction Plug, A904	1	
12484	Orifice Screen, A500 For Overdrive Piston Retainer	1	4412583
S22487	E-Clip, Chrysler Shift Linkage (10 Per Pack) Sonnax	1	
22487A	Grommet, A904 Cross Shaft Linkage (AMC/Jeep)	1	
22487B	Grommet, A904 Cross Shaft Linkage	1	3467800
22487C	Grommet, A904 Manual Lever	1	3575333
12487D	Hitch Pins, Chrysler	1	
12497-1	Detent Cable Repair Clip (Upper)(For Chrysel, Dodge, Plymouth & Jeep) Dentent Cables 1992-04 (RWD)(Teckpak)	1	

PART #	HARD PARTS	QTY	REFERENCE #
12500	Pump, A904 1960-67	1	
12500A	Pump, A904 Non Lock-Up 1968-74	1	
12500AA	Pump, A904 Non Lock-Up (1 Ring On Input Shaft) 1975-89	1	
12500AB	Pump, A904 Non Lock-Up (2 Rings On Input Shaft) 1978-Up	1	
12500B	Pump, A904 Non Lock-Up (Colt Type) (1 Ring On Input Shaft) 1974-77	1	
12500BA	Pump, A904/A500 Non Lock-Up (3 1/2" Shaft) (2 Ring On Input Shaft) 1978-Up	1	4778553
12500C	Pump, A904/A500 Lock-Up (W/2 Lug Inner Gear) (1 Direct Drum Bushing) 1978-Up	1	
12500CA	Pump, A904/A500 Lock-Up (W/2 Flats Inner Gear) (1 Direct Drum Bushing) 1990-94	1	
12500CC	Pump, A904/A500 Lock-Up (W/2 Flats Inner Gear) (2 Direct Drum Bushings) 1990-94	1	
12500CE	Pump, A904/A500 Lock-Up (3 1/2" Colt Type) 1978-Up	1	
12500CG	Pump, A904/A500 Lock-Up (W/2 Flats Inner Gear) (2 Direct Drum Bushings) 1995-Up	1	4778552
12510	Pump Body W/Gears, A904 Non Lock-Up 1960-77	1	
12510A	Pump Body W/Gears, A904/A500 Non Lock-Up & Lock-Up 1978-Up (W/2 Lugs On Inner Pump Gear)	1	4130192
12510CA	Pump Body W/Gears, A904/A500 Lock-Up 1990-94 (W/2 Flats On Inner Pump Gear)	1	
12510CG	Pump Body W/Gears, A904/A500 Lock-Up (14 Hole Pump Gasket) 1995-Up (W/2 Flats On Inner Pump Gear)	1	52118267
12520	Stator, A904 1960-67	1	
12520A	Stator, A904 Non Lock-Up (1 Ring On Input Shaft) 1968-77	1	2538409
12520AA	Stator, A904 Non Lock-Up W/Bevel (1 Ring On Input Shaft) 1975-77	1	
12520AB	Stator, A904 Non Lock-Up (2 Rings On Input Shaft) 1978-Up	1	4058941
12520B	Stator, A904 Non Lock-Up (Colt Type) (1 Ring On Input Shaft) 1974-77 (Stator Shaft Is 3 1/2" From Splined End To Flat Surface)	1	
12520BA	Stator, A904/A500 Non Lock-Up (904 Colt Type) (2 Ring On Input Shaft) 1978-Up (A500 D-50 1988-Up) (Stator Shaft Is 3 1/2" From Splined End To Flat Surface)	1	
12520C	Stator, A904/A500 Lock-Up (Fits Direct Drum W/1 Bushing) 1978-94	1	4058413
12520CC	Stator, A904/A500 Lock-Up (Fits Direct Drum W/2 Bushings) (13 Hole Gasket) 1990-94	1	
12520CE	Stator, A904/A500 Lock-Up (904 Colt Type 1978-Up) (A500 D-50 1988-Up) (Stator Shaft Is 3 1/2" From Splined End To Flat Surface)	1	
12520CG	Stator, A904/500 Lock-Up (Fits Direct Drum W/2 Bushings) (14 Hole Gasket) 1995-Up	1	52118297

© Whatever It Takes Transmission Parts. Inc.

PART #	PUMP COMPONENTS	QTY	REFERENCE #
A12530	Pump Gears, A904 Lock-Up (.7460"-.7470") 1960-77	1	3621478
A12530A	Pump Gears, A904/A500 (.7476"-.7486") (W/2 Lugs On Inner Gear) 1978-Up	1	3780238
A12530B	Pump Gears, A904/A500 (.7487"-.7497") (W/2 Lugs On Inner Gear) 1978-Up	1	

PART #	HARD PARTS (Continued)	QTY	REFERENCE #
12530C	Pump Gears, A904/A500 (W/2 Flats On Inner Gears) 1990-Up	1	
12551A	Drum, A500 Overdrive (6 Clutch)	1	4461040
12554	Drum, A904 Forward (W/Out Input Shaft) (3 Clutch) 1968-77 (1 1/8" Tall Direct Clutch Hub) (With 1 Ring On Drum)	1	
12554K	Drum, A904 Forward (W/1 Ring, 27 Spline Input Shaft) (3 Clutch) 1968-77 (1 1/8" Tall Direct Clutch Hub) With 1 Ring On Drum	1	
12554AK	Drum, A904 Forward (W/1 Ring, 27 Spline Input Shaft) (4 Clutch) 1968-74 (1 1/8" Tall Direct Clutch Hub) (With 1 Ring On Drum)	1	
12554AAK	Drum, A904 Forward (W/1 Ring, 27 Spline Input Shaft) (3 Clutch) 1968-77 (1 1/4" Tall Direct Clutch Hub) (With 1 Ring On Drum)	1	
12554BK	Drum, A904 Forward (W/2 Ring, 27 Spline Input Shaft) (4 Clutch) 1975-77	1	
12554C	Drum, A904 Forward (W/Out Input Shaft) (4 Clutch) (W/1 Ring On Drum)		
12554CK	Drum, A904/A500 Forward (W/2 Ring, 27 Spline Input Shaft) (4 Clutch) 1978-89 (Non Lock-Up) W/1 Ring On Drum	1	
12554CA	Drum, A904/A500 Forward (W/Out Input Shaft) (4 Clutch) 1990-Up (W/1 Ring On Drum) Takes A 3 Tab Washer # 232	1	
12554CAK	Drum, A904/A500 Forward (W/2 Ring, 27 Spline Input Shaft) (4 Clutch) 1990-Up (Non Lock-Up) W/1 Ring On Drum (Takes A 3 Tab Washer # 232)	1	
12554DK	Drum, A904/A500 Forward (W/2 Ring, 26 Spline Input Shaft) (4 Clutch) 1978-89 (Lock-Up) W/1 Ring On Drum Can Use A 12554EK With 12232D, DA Or DB Washer	1	
12554EK	Drum, A904/A500 Forward (W/2 Ring, 26 Spline Input Shaft) (4 Clutch) 1990-Up (Lock-Up) W/1 Ring On Drum (Takes A 3 Tab Washer #232) Can Use A 12554DK With 12233C, CA Or CB Washer	1	
12554FK	Drum, A904 (Colt, Arrow) Forward (W/1 Ring, 27 Spline Input Shaft) (3 Clutch) 1974-77 (Non Lock-Up) W/1 Ring On Drum	1	
12554GK	Drum, A904 (Colt, Arrow) Forward (W/2 Ring, 27 Spline Input Shaft) (3 Clutch) 1978-Up (Non Lock-Up) W/1 Ring On Drum	1	
12554HK	Drum, A904 (Colt, Arrow) Forward (W/2 Ring, 23 Spline Input Shaft) (4 Clutch) (Non Lock-Up) 1978-Up W/1 Ring On Drum	1	
12554HAK	Drum, A904 (Colt, Arrow) Forward (W/2 Ring, 23 Spline Input Shaft) (3 Clutch) (Lock-Up) 1978-Up W/1 Ring On Drum	1	
12554JK	Drum, A904/A500 Forward (W/2 Ring, 22 Spline Input Shaft) (3 Clutch) (Lock-Up) 1990-Up W/1 Ring On Drum	1	
12555	Drum, A904/A500 Direct (4 Clutch) 1 Bushing (6"OD At Lugs) 1971-89	1	3621476
12555A	Drum, A904/A500 Direct (5 Clutch) 1 Bushing (6"OD At Lugs) 1971-89	1	3743382
12555AA	Drum, A904/A500 Direct (5 Clutch) 1 Bushing (6 1/4"OD At Lugs) 1990-Up	1	
12555AB	Drum, A904/A500 Direct (4 Clutch) 1 Bushing (6 1/4"OD At Lugs) 1990-Up	1	
12555B	Drum, A904/A500 Direct (5 Clutch) 2 Bushing (Outer O-Ring #337 Goes On The Piston) 1992-Up (Can Use 12555CAK)	1	
12555C	Drum, A904/A500 Direct (4 Clutch) 2 Bushing (Outer O-Ring #337 Goes On The Piston) 1992-Up	1	3515707
12555CAK	Drum Kit, A904/A500 Direct (4 Clutch Made Into A 6 Clutch) (2 Bushing) Outer O-Ring #337 Goes On The Piston 1992-Up (Kit Contains:Drum, Piston, 1 Friction & 1 Steel)	1	
12555D	Drum, A904/A500 Direct (4 Clutch) 2 Bushing (Outer O-Ring #337 Goes Inside Of The Drum) 1999-Up (Steels Have V-Notched Teeth)	1	
12555DA	Drum, A904/A500 Direct (5 Clutch) 2 Bushing (Outer O-Ring #337 Goes Inside Of The Drum) 1999-Up (Steels Have V-Notched Teeth)	1	
12556	Drum, A904/A500 Reverse (Takes A Slide On Inner Race) 1974-87	1	4130867
12556A	Drum, A904/A500 Reverse (W/Pressed On Inner Race) 1988-95	1	4637956
12556B	Drum, A904/A500 Reverse (W/Pressed On Inner Race) 1990-Up (Drum Is Undercut In Front For Washer #254)	1	
12564	Piston Kit, A904/A500 For All Forward Drums	1	
12565	Piston Kit, A904/A500 For 4 Clutch Direct Drum 1971-91	1	
12565A	Piston Kit, A904/A500 For 5 Clutch Direct Drum 1976-91	1	
12565B	Piston Kit, A904/A500 For 4 & 5 Clutch Direct Drum 1992-Up (Fits Drum W/2 Bushings)	1	
12565D	Piston Kit, A904/A500 Direct (Piston Uses No O-Rings) 1998-Up	1	
12570	Clutch Hub, A500 Overdrive Clutch (3" Tall)	1	4461072
12570A	Clutch Hub, A500 overdrive Clutch (2 3/4" Tall)	1	
12580A	Planet, A500 Overdrive (4 Gear) Uses A Sun Gear With No I.D. Groove (Can Use 12580C)	1	4461017
12580AK	Planet Kit, A500 Overdrive (4 Gear) (W/22 Degree Teeth) 1989-94 (Sun Gear Has No I.D. Groove) Contains: From # 864 To # 650)	1	
12580AA	Planet, A500 Overdrive (4 Gear) Straight Teeth	1	

© Whatever It Takes Transmission Parts. Inc.

12580AB	Planet, A500 Overdrive (4 Gear) (W/15 Degree Teeth) 1995-Up (Uses A Sun Gear W/1 I.D. Groove) Can Use 12580BB	1	4798520
12580ABK	Planet Kit, A500 Overdrive (4 Gear) (W/15 Degree Teeth) 1995-Up (Sun Gear Has 1 I.D. Groove) Contains: From # 864 To # 650)	1	4874392
12580B	Planet, A500 Overdrive (5 Gear) (W/22 Degree Teeth) 1989-94 (Uses A Sungear With No I.D. Groove) Can Use 12580C	1	
12580BB	Planet, A500 Overdrive (5 Gear) (W/15 Degree Teeth) 1995-Up (Uses A Sun Gear W/1 I.D. Groove)	1	
12580BBK	Planet Kit, A500 Overdrive (5 Gear) (W/15 Degree Teeth) 1995-Up (Sun Gear W/1 I.D. Groove) Contains: From # 864 To # 650)	1	4874396
12580C	Planet, A500 Overdrive (6 Gear) (W/22 Degree Teeth) 1989-94 (Uses A Sun Gear With No I.D. Groove)	1	
12580CK	Planet Kit, A500 Overdrive (6 Gear) (W/22 Degree Teeth) 1989-94 (Contains: Planet, Sun Gear, Ring Gear & #12220)	1	
12580CA	Planet, A500 Overdrive (6 Gear) (W/15 Degree Teeth) 1995-Up	1	
12580CAK	Planet Kit, A500 Overdrive (6 Gear) (W/15 Degree Teeth) 1995-Up (Contains: Planet, Sun Gear, Ring Gear & # 12220)	1	
12582	Planet, A904 Front (4 Gear) Aluminum 1968-Up	1	
12582A	Planet, A904/A500 Front (4 Gear) Steel (Small) 1975-Up (Uses A 4 3/8"OD Ring Gear)	1	
12582B	Planet, A904/A500 Front (4 Gear) Steel (Large) Uses A 5"OD Ring Gear	1	4130518
12582C	Planet, A904/A500 Front (3 Gear) Steel 1980-Up	1	
12582CA	Planet, A904 Front (3 Gear) Aluminum 1960-67	1	
12584	Planet, A904/A500 Rear (3 Gear) Steel 1960-Up	1	
12584A	Planet, A904/A500 Rear (4 Gear) Aluminum 1968-Up	1	
12584B	Planet, A904/A500 Rear (4 Gear) Steel 1974-Up	1	4431438
12584CA	Planet, A904 Rear (3 Gear) Aluminum 1960-Up	1	
12590A	Ring Gear, A500 Overdrive Planet (Angled Teeth) 1989-94 (Has No I.D. Groove Between Park Lugs & Drum Lugs)	1	4461012
12590AA	Ring Gear, A500 Overdrive Planet (Straight Teeth)	1	
12590AB	Ring Gear, A500 Overdrive (W/15 Degree Angled Teeth) Has 1 I.D. Groove Between Park Lugs & Drum Lugs	1	4761010
12592	Ring Gear W/Hub, A904/A500 Front (4 3/8"OD) 1968-Up (For Small Planet)	1	
12592A	Ring Gear W/Hub, A904/A500 Front (5"OD) For Large Planet (Uses A 1 Tab Washer #234) With No 2 Tab Race Under Washer	1	
12592B	Ring Gear W/Hub, A904/A500 Front (5"OD) For Large Planet (Uses a 2 Tab Race #236 Under Washer #234)	1	
12594	Ring Gear W/Hub, A904/A500 Rear 1960-Up	1	
12610A	Sun Gear, A500 Overdrive (22 Degree Angled Teeth) 1989-94	1	4461022
12610AA	Sun Gear, A500 Overdrive (Straight Teeth)	1	
12610AB	Sun Gear, A500 Overdrive (15 Degree Angled Teeth) 1995-Up	1	4778742
12612	Sun Gear, A904/A500 Forward & Rear Planet (28 Teeth / 28 Teeth)	1	
12612B	Sun Gear, A904/A500 Forward & Rear Planet (38 Teeth / 28 Teeth)	1	4130685
12622	Shell, A904/A500 (For Small Planet) 6 1/8"OD At Lugs 1960-Up	1	
12622A	Shell, A904/A500 (For Large Planet) 6 1/8"OD At Lugs 1978-92	1	
12622B	Shell, A904/A500 (For Large Planet) 6 3/8"OD At Lugs 1992-Up	1	4531288
12634	Support, A904 Output Shaft (4 Bolt) 1966-89	1	2466881
12634A	Support, A904 Output Shaft (6 Bolt) 1988-Up	1	4431433
12634B	Support, A500 Piston Retainer (W/Governor Feed Tubes) 1988-95 (Comes W/2 Plugs) For 12634C Also	1	4446722
22634-6BK	Plug/O-Ring Kit, A500 (Fits 12634B) (Contains: 2 Plugs & O-Ring)	1	
S12634B-OS	Support, A500 Piston Retainer (Oversize) 1988-Up (Sonnax) Reverse Drum Must Be Bored (Use With Or Without Governor Feed Tubes)	1	
12634C	Support, A500 Piston Retainer (Has No Feed Tube) 1994-Up	1	4617246

PART #	SPRAGS & ONE WAY CLUTCHES	QTY	REFERENCE #
12650	Sprag, A500 Overrun Clutch (Overdrive) 1990-Up	1	4461015
12654	Sprag, A904 Rear (10 Spring & Roller) 1964-88	1	
54654A	Sprag, A904/A500 Rear (12 Spring & Roller) 1988-Up	1	8628183
12660	Inner Race, A500 Overdrive Sprag 1990-Up	1	4461124
12664	Inner Race, A904/A500 Rear Sprag (24 Teeth) Slide On Type 1960-89	1	3515618
12664A	Inner Race, A904/A500 Rear Sprag (Press On Type) (Sold W/Type #556) 1989-Up	1	
12665	Outer Race, A904 Rear Sprag (7 Rivet Holes) 1960-89	1	3780221
12665A	Outer Race, A904/A500 Rear Sprag (12 Bolt Holes, Only 11 Holes Are Threaded) 1988-Up	1	4431690
12665B	Outer Race, A904 Rear Sprag (6 Threaded Holes) 1988-Up	1	
12665K	Outer Race Kit, A904 Rear Sprag (Bolt In Outer Race & Retainer) 1960-89 (This Kit Replaces The 7 Rivet Outer Race)	1	

© Whatever It Takes Transmission Parts. Inc.

PART #	HARD PARTS (Continued)	QTY	REFERENCE #
12670	Input Shaft, A904 (1 Ring) (27 Spline)	1	
12670B	Input Shaft, A904/A500 (2 Ring) (27 Spline) Non Lock-Up	1	
12670D	Input Shaft, A904/A500 (2 Ring) (26 Spline) Lock-Up	1	4505189
12670F	Input Shaft, A904 (Colt, Arrow) (1 Ring) (27 Spline)	1	
12670G	Input Shaft, A904 (Colt, Arrow) (2 Ring) (27 Spline) Non Lock-Up	1	
12670H	Input Shaft, A904 (Colt, Arrow) (1 Ring) (23 Spline) Non Lock-Up	1	
12670HA	Input Shaft, A904 (Colt, Arrow) (2 Ring) (23 Spline) Lock-Up	1	
12670J	Input Shaft, A904/A500 (2 ring) (22 Spline) Lock-Up 1990-Up	1	
12674	Intermediate Shaft, A500 (Uses Washer #233 W/2 Inner Tabs) 1988-89	1	4431913
12674A	Intermediate Shaft, A500 (Uses Washer #233 W/3 Outer Tabs) 1990-Up	1	4617604
12678	Output Shaft, A904 (21 1/2” Long) (2WD) 1960-77	1	
12678A	Output Shaft, A904 (21 1/2” Long) (2WD) 1978-89	1	
12678B	Output Shaft, A904 (21 1/2” Long) (2WD) 1990-Up	1	
12678C	Output Shaft, A904 (12 1/4” Long) (4x4 Eagle Type)	1	
12678D	Output Shaft, A904 (14 3/4” Long) (4x4 Dakota Type)	1	
12678E	Output Shaft, A500 2WD (1 1/16” Long Key Way Slot)	1	
12678EA	Output Shaft, A500 2WD (1 7/16” Long Key Way Slot)	1	
12678EB	Output Shaft, A500 2WD (13 Teeth Speed-O Gear) No Key Way	1	
12678EC	Output Shaft, A500 2WD (No Speed-O Gear) No Key Way	1	
12678F	Output Shaft, A500 4x4 (9 1/4” Long) (1 1/16” Long Key Way Slot)	1	
12678FA	Output Sahft, A500 4x4 (9 1/4” Long) (1 7/16” Long Key Way Slot)	1	
12678G	Output Shaft, A500 4x4 (5 1/4” Long) (1 1/8” Long Slpines) (W/Pilot On Rear Of Shaft)	1	
12678GA	Output Shaft, A500 4x4 (5 1/4” Long) (1 7/8” Long Splines)	1	
12678GAHP	Output Shaft, A500 4x4 (5 1/4” Long) (1 7/8” Long Splines)(TCS Heavy Duty)	1	
12678P	Pin, A904/A500 Pilot (Presses Into End Of Output Shaft) 1978-89	1	4130088
S22678PAK	Pin/Plug Kit, A500 Pilot Pin (Goes Into The Intermediate Shaft) With Orifice Plug For Rear Of Shaft 1990-Up (Sonnax)	1	
12680	Governor, A904 (Large Valve 1.002:OD) 1963-Up	1	
12680A	Governor, A904 (Large Valve 1.070”OD) 1963-Up	1	
12680B	Governor, A500 (Large Valve Is Steel 1.070”OD)(W/Keyway Slot In Aluminum Body) 1989-95	1	
12680C	Governor, A500/518 (Large Valve Is Brass 1.070”OD)(W/Keyway Slot In Aluminum Body) 1989-95	1	
12681A-1	Valve, A500 Governor (Small, Steel) Superior	1	
S12681A-1	Valve, A500 Governor (Small, Aluminum) (Sonnax)	1	
12685	Support, A500 Governor (3 Ring)	1	4461009
12685A	Support, A500 Governor (2 Ring)	1	
12685B	Support, A904 Governor (2 Ring)	1	
12688	Bracket, A904/A500 Governor Bolt	1	
12697	Retainer, A500 Governor Support	1	4461002
12740	Valve Body, A904 Non Lock-Up 1972-86	1	
12740-1	Valve Body, A904 1967-71	1	
12740A	Valve Body, A904 Lock-Up 1978-86	1	
12740AA	Valve Body, A904 Lock-Up (W/1 Wire Single Solenoid) 1987-Up	1	
12740B	Valve Body, A904 Lock-Up (W/2 Wire Single Solenoid)(Uses A Screw In Neutral Safety Switch) 1996-Up	1	
12740B-1	Valve Body, A904 Lock-Up (W/2 Wire Single Solenoid)(Uses A Push In Neutral Safety Switch) 2001-Up	1	
12740BA	Valve Body, A500 (W/1 Single Solenoid)	1	
12740C	Valve Body, A500 (With 2 Solenoids)	1	
12740CA	Valve Body, A500 (With 2 Solenoids & Boost Valve Tube) 1989-93	1	
12740CB	Valve Body, A500 (With 2 Solenoids & Boost Valve Tube) 1994-Up	1	
12740E	Valve Body, A500 (W/3 Solenoids & 1 Round Sensor) 3 Pin Governor Solenoid 1989-93	1	
12740EA	Valve Body, A500 (W/3 Solenoids & 1 Round Sensor) 4 Pin Governor Solenoid 1989-93	1	
12740EB	Valve Body, A500 (W/3 Solenoids & 1 Round Sensor) 3 Pin Governor Solenoid 1994-99 (Can Use 12740EC)	1	
12740EC	Valve Body, A500 (W/3 Solenoids & 1 Round Sensor) 4 Pin Governor Solenoid 1994-99	1	
12740ED	Valve Body, A500 (W/3 Solenoids & 1 Square Sensor) 4 Pin Governor Solenoid 2000-Up (Uses A 3 Prong Screw-In Neutral Safety Switch)	1	
12740G	Valve Body, A500 (W/3 Solenoids & 1 Square Sensor) 4 Pin Governor Solenoid 2001-02 (Uses A Push-In Neutral Safety Switch)	1	
12740GA	Valve Body, A500 (W/3 Solenoids & 1 Square Sensor) 4 Pin Governor Solenoid 2003-04 (Uses A Push-In Neutral Safety Switch)	1	

PART #	VALVE BODY COMPONENTS	QTY	REFERENCE #
S12741-4	Bracket, A500 Holds Transducer (#415 Sensor) To Valve Body (4th Design)(Metal, 3 Bolt Holes) 2000-Up	1	

© Whatever It Takes Transmission Parts. Inc.

S12741-7 ..... Neutral Safety Back-Up Insulator, A904/A500 (Replaces The Plastic Piece On The Manual Shaft Lever (Rooster Comb)(For The Screw-In Type Neutral Safety Switch)(Sonnax) 1
S12741A-1 ..... Switch Valve, A500 (Prevents Lock-Up Shudder)(Sonnax) 1
12741A-5 ..... Check Ball, A904/A500 11/32"OD (Torlon) 1
S12741A-7 ..... Neutral Safety Back Up Insulator, A500 Repalces The Plastic Piece On The Manual Shaft Lever (Rooster Comb)(Fro The Push-In Type Neutral Safety Switch) 6/2002-Up 1
S12741AOS-1 .. Switch Valve, A500 (Oversize) (Sonnax) Must Use Reamer T-22771A-TL13 1
T-22771A-TL13 .. Reamer Set, For S12741AOS-1 1
S12741C-4 ..... Retainers, A500 TCC Boost Valve Spring (Sonnax) (5 Pieces) 1
12741CA-4 ..... Plate, A500 TCC Boost Valve (Superior) With Retainer To Hold Spring In 1
12741CK ..... Spring Kit, A904 Lock-Up Delay (Spring & Plate) 1
S12741CAK .... Valve Kit, A500 TCC Boost (Oversized)(Contains: LockUp Boost Valve (OS), Plug Valve (OS), Spring & Spring Retainer)(Requires T-F-22771-TL19 & T-VB-Fix) 1
T-F-22771-TL19 Tool Kit For S12741CAK (Contains: Reamer, Reamer Jig & Guide Pin)(Requires T-VB-Fix) 1
S12741D-6K ... Plug Kit, A904/A500 Valve Body Governor Bore (Contains: One 1-2 Governor Plug, One 2-3 Governor Plug & Three Teflon Seals) (Sonnax) 1
S12741M-1 ..... Manual Valve, A904/A500 (Allows Converter Charge In Park)(Sonnax) 1
S12741NCK .... Sure Cure kit, A500 (Sonnax) 1
S12741NHPK . Throttle Valve Kit, A904/A500 (High Performance) (Sonnax) 1
S12741NK ..... Throttle Valve Kit, A904/A500 (Valve, Plunger, Springs & Sleeve)(Sonnax) 1
S12741NOK ... Throttle Valve Kit, A904/A500 (Oversize) (Valve, Plunger, Springs & Sleeve)(Sonnax) T-F-22771-TL Reamer & T-VB-Fix Required) 1
S12741P-1 ..... Valve, A904/A500 Lube pressure Regulated Valve (Reduces Converter Drain Back) (Sonnax) For 1994-Up A500 "RH & RE" Units As Well As 1978-Up A904 Transmissions 1
S12741P-6K ... Plug Kit, A904 Regulated Pressure Valve plugs (Sonnax) 1
S12741PA-1 ... Valve, A904 Lube Pressure Regulated Valve 1962-77 (Sonnax) 1
S12740POS-1 Valve, A904/A500 Lube Pressure Regulated Valve (Sonnax)(Oversize)(Must Use Tool T-F-22771A-TL7 & T-VB-Fix)(Contains: Oversize Valve, Oversize Plug & Spring) 1
T-F-22771A-TL7 Tool Kit For RWD Chrysler 1978-Up Pressure Regulator Valve Kit 1
12747EA ..... Plate, A500 Valve Body (W/Out Lock-Up Boost Tube) 1988-94 (Transgo) 1
12747EB ..... Plate, A500 Valve Body 1995-03 (Transgo) 1

PART #	HARD PARTS (Continued)	QTY	REFERENCE #

12760 ..... Case, A904 318/360 Non Lock-Up 1972-86 1
12760A ..... Case, A904 318/360 Lock-Up 1978-86 1
12760B ..... Case, A904 318/360 Lock-Up (4 Bolt Support) 1 Wire Rear Case Connector W/ 1/4" Pipe Thread L1987-Up 1
12760BA ..... Case, A904 318/360 Lock-Up (6 Bolt Support) 1 Wire Rear Case Connector W/ 1/4" Pipe Thread L1987-Up (Without Timming Hole) 1
12760BB ..... Case, A904 318/360 Lock-Up (6 Bolt Support) 1 Wire Rear Case Connector W/ 1/4" Pipe Thread L1987-Up (With Timming Hole) 1
12760BC ..... Case, A904 318/360 Lock-Up (6 Bolt Support) 2 Wire Rear Case Connector W/ 3/8" Pipe Thread L1987-Up (With Timming Hole) 1
12760BD ..... Case, A904 225 6 Cylinder Non Lock-Up (4 Bolt Support) 1972-86 1
12760BE ..... Case, A904 225 6 Cylinder Lock-Up (4 Bolt Support) 1978-86 1
12760CA ..... Case, A904 225 6 Cylinder Lock-Up (6 Bolt Support) 1 Wire Rear Case Connector W/ 1/4 Pipe Thread L1987-Up 1
12760E ..... Case, A904 AMC Non Lock-Up 1974-86 1
12760F ..... Case, A904 AMC Lock-Up (4 Bolt Rear Support) 1978-86 1
12760FA ..... Case, A904 AMC Lock-Up (6 Bolt Rear Support) 1987-Up (No Rear Electric Connector) 1
12760FB ..... Case, A904 AMC Lock-Up (6 Bolt Rear Support) 1987-Up (1 Wire Rear Case Connector W/ 1/4" Pipe Thread) 1
12760G ..... Case, A904 3.9L Lock-Up (Dakota W/Extra Boss On Bell) 1988-Up 1
12760H ..... Case, A904 Non Lock-Up (With V-8 Chevrolet Bell) 1972-79 1
12760J ..... Case, A904 2.8L V-6 lock-Up (No Rear Electric Connector) W/Square Timming Hole 1
12760JA ..... Case, A904 2.8L V-6 Lock-Up (1 Wire Case Connector W/ 1/4" Pipe Thread) (4 Bolt Support) W/Square Timming Hole 1
12760JB ..... Case, A904 2.8L V-6 Lock-Up (1 Wire Case Connector W/ 1/4" Pipe Thread) (6 Bolt Support) W/Square Timming Hole 1
12760JC ..... Case, A904 2.8L V-6 Lock-Up (2 Wire Case Connector W/ 3/8" Pipe Thread) (6 Bolt Support) W/Square Timming Hole 1
12760K ..... Case, A904 2.8L V-6 lock-Up (No Rear Electric Connector) W/Out Square Timming Hole 1
12760L ..... Case, A500 318/360 3.9L (.900"OD Case Connector) (7 3/4" Top Bolts) 16 Holes Bell To Engine (Round & Square) Driver Side Starter W/Out Timming Hole, 14 Openings (Round & Square) For Pump Gasket 1988-94 1
12760LA ..... Case, A500 (Some 3.9L) (.900"OD Case Connector) (7 3/4" Top Bolts) 17 Holes Bell To Engine (Round & Square) Driver Side Starter With Timming Hole, 14 Openings (Round & Square) For Pump Gasket 1988-94 1

© Whatever It Takes Transmission Parts. Inc.

PART #	HARDPARTS (Continued)	QTY	REFERENCE #
12760LB	Case, A500 318/360 3.9L (.900"OD Case Connector) (7 3/4" Top Bolts) 16 Holes Bell To Engine (Round & Square) Drivers Side Starter With Timming Hole, 14 Openings (Round & Square) For Pump Gasket 1988-94	1	
12760LD	Case, A500 318/360 3.9L (1.080"OD Case Connector) (7 3/4" Top Bolts) 16 Holes Bell To Engine (Round & Square) Driver Side Starter (13 Openings (Round & Square For Pump Gasket) 1995-Up	1	
12760M	Case, A500 318/360 3.9L (1.080"OD Case Connector) (7 3/4" Top Bolts) 17 Holes Bell To Engine (Round & Square) Driver Side Starter (13 Openings (Round & Square) For Pump Gasket) 1995-Up (Uses A 3 Prong Screw-In Neutral Safety Switch)	1	
12760MA	Case, A500 318/360 3.9L (1.080"OD Case Connector) (7 3/4" Top Bolts) 17 Holes Bell To Engine (Round & Square) Driver Side Starter (14 Openings (Round & Square) For Pump Gasket) 1988-94 (Uses A 3 Prong Screw-In Neutral Safety Switch)	1	
12760MB	Case, A500 318/360 3.9L (1.080"OD Case Connector) (7 3/4" Top Bolts) 17 Holes Bell To Engine (Round & Square) Drivers Side Starter (13 Openings (Round & Square) For Pump Gasket) 2001-Up (Uses A .790"OD Push-In Neutral Safety Switch)	1	
12760N	Case, A500 318/360 3.9L (1.080"OD Case Connector) (7 3/4" Top Bolts) 16 Holes Bell To Engine (Round & Square) Passenger Side Starter (14 Openings (Round & Square) For Pump Gasket) Up Thru 1994	1	
12760NA	Case, A500 318/360 3.9L (1.080"OD Case Connector) (7 3/4" Top Bolts) 16 Holes Bell To Engine (Round & Square) Passenger Side Starter (13 Openings (Round & Square) For Pump Gasket) 1995-Up	1	
12760P	Case, A500 (1.080"OD Case Connector) (5 7/8" Top Bolts) Passenger Side Starter (14 Openings (Round & Square) For Pump Gasket) 1989-94 (Fits 4.0L Jeep)	1	
12760PA	Case, A500 (1.080"OD Case Connector) (5 7/8" Top Bolts) Passenger Side Starter (13 Openings (Round & Square) For Pump Gasket) 1995-UP (Fits 4.0L Jeep)	1	
12760S	Case, A500 (.900"OD Case Connector) (5 1/8" Top Bolts)	1	
12760Z	Case, A904 225 6 Cylinder (Push Button) 1960-65	1	
12760ZA	Case, A904 273/318 (Push Button) 1960-65	1	

PART #	CASE COMPONENTS	QTY	REFERENCE #
22761MB	Bracket, A500 (Holds Push-In Neutral Safety Switch To Case) Screws Into Case W/2 Hole Bracket & Washers (For 12410C Switch) 2001-Up	1	
22761S	Sleeve, A500 (Presses Into Case Connector Hole On Late Model Cases With .900"OD Hole)	1	
S22761S-2K	Sleeve Adapter Kit, A500 Neutral Safety Switch (Sleeve With O-Ring & Washer Makes 2001-Up Cases Fit Early Type Cases With The 3 Prong Neutral Safety Switch) Sonnax	1	
22761-2C	Sleeve, A727/A500 Shift Linkage Shaft (Use With T-56361-TL)	1	
T-56361-TL	Tool Kit, For 22761-2C	1	

PART #	HARDPARTS (Continued)	QTY	REFERENCE #
12765	Pan, A904 1960-Up (14 Holes)	1	
12765A	Pan, A904 (Small Pan) Colt/Arrow Type (14 Holes)	1	
12765B	Pan, A500 (2.420" Deep) With No Step In Bottom	1	4505089
12765C	Pan, A500 (2.920" Deep) With Step In Bottom	1	
12765D	Pan, A500 (3.155" Deep) With No Step In Bottom 1998-Up (Uses The Metal/Plastic Filter)	1	
12770	Extension Housing, A904 (14 3/4") 1966-Up	1	
12770A	Extension Housing, A904 4x4 Eagle 1979-Up (Snap Ring Cover On Bottom)	1	
12770AA	Extension Housing, A904 2WD (14 3/4") Long Snap Ring Cover On Passenger Side	1	
12770B	Extension Housing, A500 2WD (Speed-O Gear Type)	1	
12770BK	Overdrive Assembly, A500 2WD Governor Type (W/Speed-O) No Sensor (4 Gear Planet)	1	
12770C	Extension Housing, A500 4x4 (15 7/8" Long) (No Speed-O) No Sensor (Uses A Rear Seal) (Uses A 2 Bolt Mount) (Can Use 12770CB Or 12770CC)(With .637" Wide Park Pawl)	1	
12770CK	Overdrive Assembly, A500 4x4 (15 7/8" Long) Governor Type (No Speed-O) No Sensor (Uses A Rear Seal) (Uses A 2 Bolt Mount) (Can Use 12770CBK Or 12770CCK)	1	
12770CA	Extension Housing, A500 4x4 (15 7/8" Long) (No Speed-O) No Sensor (No Rear Seal) (With .637" Wide Park Pawl)	1	
12770CB	Extension Housing, A500 4x4 (15 7/8" Long) (No Speed-O) No Sensor (Uses A Rear Seal) (Uses A 3 Bolt Mount) (Can Use A 12770CC)(With .637" Wide Park Pawl)	1	
12770CBK	Overdrive Assembly, A500 4x4 (15 7/8" Long) Governor Type (No Speed-O) No Sensor (Uses A Rear Seal) (Uses A 3 Bolt Mount) (Can Use 12770CCK)	1	
12770CC	Extension Housing, A500 4x4 (15 7/8" Long) (No Speed-O) No Sensor (Uses A Rear Seal) (Uses A 5 Bolt Mount)(With .637" Wide Park Pawl)	1	
12770CCK	Overdrive Assembly, A500 4x4 (15 7/8" Long) Governor Type (No Speed-O) No Sensor (Uses A Rear Seal) (Uses A 5 Bolt Mount)	1	
12770D	Extension Housing, A500 2WD (No Governor) (With Speed-O) W/Sensor	1	
12770DK	Overdrive Assembly, A500 2WD (No Governor) (W/Speed-O) W/Sensor (4 Gear Planet)	1	
12770DA	Extension Housing, A500 2WD (No Governor) (No Speed-O) W/Sensor	1	

© Whatever It Takes Transmission Parts. Inc.

12770DAK	Overdrive Assembly, A500 2WD (No Governor) (No Speed-O) W/Sensor (4 Gear Planet)	1	
12770E	Extension Housing, A500 4x4 (10 7/8” Long) (No Speed-O) W/Sensor (Can Use 12770EB)	1	
12770EK	Overdrive Assembly, A500 4x4 (10 7/8” Long) No Governor (No Speed-O) W/Sensor (Output Shaft Splined To End (No Side Mount) Can Use U12770EBK	1	
12770EAK	Overdrive Assembly, A500 4x4 (10 7/8” Long) No Governor (No Speed-O) W/Sensor (W/ 1/2” Pilot On End Of Shaft) W/Side Mount	1	
12770EB	Extension Housing, A500 4x4 (10 7/8” Long) No Governor (W/Speed Sensor) (Holds 4 or 6 Overdrive Clutch) W/2 Mounting Bosses On Driver Side (With .637” Wide Park Pawl)	1	
12770EBK	Overdrive Assembly, A500 4x4 (10 7/8” Long) No Governor (Holds 4 or 6 Overdrive Clutch) (W/Speed Sensor) W/2 Mounting Bosses On Driver Side	1	
12770EC	Extension Housing, A500 4x4 (10 7/8” Long) No Governor (Holds 4 or 6 Overdrive Clutch) (W/Speed Sensor) W/3 Mounting Bosses On Driver Side & 1 Mounting Boss On Passenger Side)	1	
12770ECK	Overdrive Assembly, A500 4x4 (10 7/8” Long) No Governor (Holds 4 or 6 Overdrive Clutch) (W/Speed Sensor) W/3 Mounting Bosses On Driver Side & 1 Mounting Boss On Passenger Side)	1	
12770Z	Extension Housing, A904 2WD (Push Button) 1960-65	1	
12771	Cover, A904 Output Shaft Snap Ring (With Bolts)	1	
12774	Speed-O Housing, A904 Aluminum (Cable Type)	1	
12774-436	Sensor, A904/A500 Speed (Screws Onto The 12774)(With 2 Pin Oval Connector)(Takes Place Of A Cable)	1	
12774B	Speed-O Housing, A904/A400 (Plastic) With 3 Round Prong Connectors	1	
12774BA	Speed-O Housing, A904/A500 (Plastic) With 3 Flat Blade Connectors	1	
22775	Bolt, A904/A500 Flex Plate To Converter	AR	
12777K	Bolt Set, A904/A500 Pump To Case	1	
12778K	Bolt Set, A604/A500 Stator To Pump Body	1	
12779K	Bolt Set, A904 Pan To Case	1	
12781K	Bolt Set, A904 Extension Housing To Case	1	
12781AK	Bolt Set, A500 Extension Housing Top Case (7/16” Hex Head)	1	
12782K	Bolt Set, A904 Valve Body To Case	1	
22787K	Bolt Set, A904 Holds Governor To Support	1	
12789AK	Bolt Set, A904/A500 Output Shaft Bearing Cover To Extension Housing (Phillips Head) (2 Per Set)	1	
12789BK	Bolt Set, A904/A500 Output Shaft Bearing Cover To Extension Housing (Torx Head) (2 Per Set)	1	
12790K	Bolt Set, A500 Overdrive Retainer (Or Rear Support) To Case (6 Pieces)	1	
22790K	Bolt Set, A904 Output Support To Case (4 Bolts)	1	
44839	Pan Magnet, Rectangle	1	
44839A	Pan Magnet, Round	1	3787240
12842	Bracket, A904/A500 Speed-O Hold Down	1	
12844	Key, A500 Holds Governor Support To Shaft (Half Moon)	1	
12844A	Key, A500 Holds Governor Support To Shaft (Rectangle)	1	
12848	Gear, A904/A500 Driven Speed-O (24 Teeth) With 3” Long Steel Shaft	1	
12848C	Gear, A904/A500 Driven Speed-O (26 Teeth) With 3” Long Steel Shaft	1	
12848D	Gear, A904/A500 Driven Speed-O (27 Teeth) With 3” Long Steel Shaft	1	
12848F	Gear, A904/A500 Driven Speed-O (29 Teeth) With 3” Long Steel Shaft	1	
12848FA	Gear, A904/A500 Driven Speed-O (29 Teeth) With 1 1/2” Long Steel Shaft	1	
12848G	Gear, A904/A500 Driven Speed-O (30 Teeth) With 3” Long Steel Shaft	1	
12848H	Gear, A904/A500 Driven Speed-O (31 Teeth) With 3” Long Steel Shaft	1	
12848HA	Gear, A904/A500 Driven Speed-O (31 Teeth) With 1 1/2” Long Steel Shaft	1	
12848J	Gear, A904/A500 Driven Speed-O (32 Teeth) With 3” Long Steel Shaft	1	
12848JA	Gear, A904/A500 Driven Speed-O (32 Teeth) With 1 1/2” Long Steel Shaft	1	
12848K	Gear, A904/A500 Driven Speed-O (33 Teeth) With 3” Long Steel Shaft	1	
12848KA	Gear, A904/A500 Driven Speed-O (33 Teeth) With 1 1/2” Long Steel Shaft	1	
12848L	Gear, A904/A500 Driven Speed-O (34 Teeth) With 3” Long Steel Shaft	1	
12848LA	Gear, A904/A500 Driven Speed-O (34 Teeth) With 1 1/2” Long Steel Shaft	1	
12848M	Gear, A904/A500 Driven Speed-O (35 Teeth) With 3” Long Steel Shaft	1	
12848MA	Gear, A904/A500 Driven Speed-O (35 Teeth) With 1 1/2” Long Steel Shaft	1	
12848N	Gear, A904/A500 Driven Speed-O (36 Teeth) With 3” Long Steel Shaft	1	
12848NA	Gear, A904/A500 Driven Speed-O (36 Teeth) With 1 1/2” Long Steel Shaft	1	
12848P	Gear, A904/A500 Driven Speed-O (37 Teeth) With 3” Long Steel Shaft	1	
12848Q	Gear, A904/A500 Driven Speed-O (38 Teeth) With 3” Long Steel Shaft	1	
12848QA	Gear, A904/A500 Driven Speed-O (38 Teeth) With 1 1/2” Long Steel Shaft	1	
12848S	Gear, A904/A500 Driven Speed-O (40 Teeth) With 3” Long Steel Shaft	1	
12848ZJ	Gear, A904/A500 Driven Speed-O (56 Teeth) With 3” Long Steel Shaft	1	
12848ZK	Gear, A904/A500 Driven Speed-O (57 Teeth) With 3” Long Steel Shaft	1	
12860	Snap Ring, A500 Overdrive Clutch (.051” Thick)(6 3/8”OD)(Waved) 1988-Up	1	4461066
12861	Snap Ring, A500 Overdrive Clutch Front	1	4461082
12862	Snap Ring, A500 Overdrive Clutch (Flat)	1	4461065
12863	Snap Ring, A500 Overdrive Direct Drum To Ring Gear	2	4461060

© Whatever It Takes Transmission Parts. Inc.

PART #	HARD PARTS	QTY.	REFERENCE #
12864	Snap Ring, A500 Overdrive Direct Clutch (Front) (.079" Thick)(5 13/16"OD) 1988-Up	1	4461032
12866	Snap Ring, A500 Overdrive Sun Gear (Round)	1	4461064
12867	Snap Ring, A500 Overdrive Sun Gear (Flat)	1	4461063
12868	Snap Ring, A500 Overdrive Ring Gear To Output Shaft	1	4461059
12877	Snap Ring, A904/A500 Forward Clutch (Bottom, Wavy)	1	2466283
12878	Snap Ring, A904/A500 Forward / Direct Clutch (.061") (Top, Flat)	2	4130761
12878A	Snap Ring, A904/A500 Forward & Direct Clutch (Top, Wavy)	1	3410571
12878AA	Snap Ring, A904/A500 Rear Clutch (.076") (Top, Flat)	1	
12878AB	Snap Ring, A904/A500 Rear Clutch (.098")	1	
12878AC	Snap Ring, A904/A500 Forward Clutch (Rear Clutch) (.085") (Top, Flat)	1	
12879	Snap Ring, A904/A500 Holds Retainer To Direct Drum	1	1942400
12880	Snap Ring, A904/A500 Holds Input Shaft To Forward Drum	1	6022859
12881	Snap Ring, A904/A500 Front Planet To Front Ring Gear	1	
12882	Snap Ring, A904/A500 Front & Rear Ring Gear To Hub (4"OD) Fits All Rear & The Small Front Planet Ring Gear To Hub	1	
12882B	Snap Ring, A904/A500 Front Planet Ring Gear To Hub (4 1/2"OD) Fits The Large Front Planet Ring Gear	1	1942444
12884	Snap Ring, A904/A500 Front Sun Gear	1	1942439
44887	Snap Ring, A904/A500 Holds Seal To Speed-O Housing	1	
12888	Retainer, A904/A500 Governor	1	
12889	Snap Ring, A904 Holds Governor To Output Shaft	1	
12890	Snap Ring, A904/A500 Rear Support To Rear Hub 1988-E92	1	6033480
12891	Snap Ring, A500 Holds Bearing #271 On Output Shaft	1	4461068
12892	Snap Ring, A500 Oil Distributor Rear	1	4461056
12893	Snap Ring, A500 Output Bearing To Output Shaft	1	4461069
12894	Snap Ring, A904/A500 Front Planet To Output Shaft (.040")	1	6026289
12894A	Snap Ring, A904/A500 Holds Front Planet To Output Shaft (.062")	1	6030938
12894B	Snap Ring, A904/A500 Holds Front Planet To Output Shaft (.084")	1	6030404
12895	Snap Ring, A904 Holds Rear Bearing To Output Shaft	1	
12896	Sanp Ring, A904/A500 Holds Front Servo In	1	
12897	Snap Ring, A904 Holds Output Shaft Bearing To Extension Housing (W/2 Ears)	1	4461057
12897A	Snap Ring, A500 Holds Output Shaft Bearing To Extension Housing (W/2 Ears)	1	
12898	Snap Ring, A500 Overdrive Support To Output Shaft	1	8121057
12905	Servo Assembly, A904/A500 Front (1.240"OD) (6 Cylinder)	1	
12905A	Servo Assembly, A904/A500 Front (.990"OD) (V-8)	1	
12906	Spring, A904/A500 Front Servo	1	
12907	Piston, A904/A500 Front Servo	1	4058777
12909	Retainer, A904/A500 Front Servo Spring	1	
12910	Servo Assembly, A904/A500 Rear	1	
12911	Spring, A904/A500 Rear Servo	1	
12912	Piston, A904/A500 Rear Servo (2.546"OD)	1	52118744
A12913AC	Servo Pin, A500 Reverse Servo (Steel Replacement)(Adapt A Case)	1	
S12913K	Pin/Plug, A904/A500 Reverse Servo (Sonnax) (Contains: Pin/Plug, O-Ring & Retaining Ring)	1	
12914	Retainer, A904/A500 Rear Servo Spring	1	
12916-2	Strut, A904/A500 Front Band	1	3515084
12917	Strut Assembly, A904 Rear Band (For Rigid Band) (W/Anchor & Strut)	1	
12917-1	Lever, A904/A500 Rear Band(For Rigid Band)	1	
12917A	Strut Assembly, A904/A500 Rear Band (For Double Wrap Band)	1	
12917A-1	Lever, A904/A500 Rear Band (For Double Wrap Band)	1	4202764
12917-4	Reaction Pin, A904/A500 Rear Band	1	3410102
12919	Adjusting Screw, A904/A500 Front Band	1	1942477
12925	Accumulator Assembly, A904/A500 (Aluminum)	1	
22926	Spring, A904/A500 Accumulator Return (1.525" Tall)	1	4531259
32926	Spring, A904/A500 Accumulator Return (1.060" Tall)	1	
12927	Piston, A904/A500 Accumulator (Aluminum)	1	3743650
22927	Piston, A904/A500 Accumulator (Plastic)	1	
12927HD	Piston, A904/A500 Accumulator (Aluminum With 4 Rings)	1	
22936	Spring, A500 3-4 Accumulator (.122"OD Wire) (2.350" Long)	1	
12936K	Spring, A500 3-4 Accumulator (.060"OD Wire) (2.750" Long)	1	
12960	Piston, A500 Overdrive Direct Clutch	1	52118599
12964	Piston, A904/A500 Forward Clutch	1	3515716
12965	Piston, A904/A500 Direct (Uses The Outer O-Ring Only)	1	4617154
12965D	Piston, A904/A500 Direct (Has No O-Rings On Piston) 1998-Up	1	
12970	Spring, A500 Overdrive Clutch Return	1	4461027
12974	Spring, A904/A500 Forward Return Spring (5.030:OD) 1960-89 (Can Use 12974A)	1	1942414
12974A	Spring, A904/A500 Forward clutch Return (4.970"OD) 1990-Up (Retro Fits to 1960)	1	1942414
12975	Spring, A904/A500 Direct Clutch Return	1	
12985	Retainer, A904/A500 Direct Clutch Spring	1	4617516

CHRYSLER

© Whatever It Takes Transmission Parts. Inc.

12989	Retainer, A904 Sprag (W/4 Bolt Rear Support) 1960-88	1	2801426
12989A	Retainer, A904 Sprag (W/6 Bolt Rear Support) 1987-Up	1	
S12991-2K	Detent Ball & Spring Kit, A904/A500 Valve Body Rooster Comb (Contains: Sleeve & Detent Ball)(Must Use Tool T-22771-TL12)	1	
T-22771-TL12	Tool For S12991-2K	1	
12991A-3	Rooster Comb, A904 (Has No Plastic Insulator For Neutral Safety Switch) 1965-E70	1	
12991B-3	Rooster Comb, A904 (Has A Long Plastic Insulator For The Neutral Safety Switch) L1970-77	1	
12991C-3	Rooster Comb, A904 (Has A Long Plastic Insulator For The Neutral Safety Switch) 1978-88	1	
12991D-3	Rooster Comb, A904/A500 (Has A Long Plastic Insulator For The Screw In Neutral Safety Switch) 1989-01	1	
12994	Park Rod, A904	1	
12994A	Park Rod, A500	1	4431748
12995A	Park Pawl Assembly, A500	1	
12996	Fitting, A904 Cooler Line (5/16” Line x 1/8” Pipe) Screw In Flared	1	
22996A	Fitting, A500 Cooler Line (3/8” Line x 1/4” Pipe) Push In (Gas)	1	
12996B	Fitting, A904 Cooler Line (90 Degree Elbow) (5/16” Line x 1/8” Pipe) Screw In Flared (Can Use 26996)	1	
12996C	Fitting, A904/A500 Cooler Line (3/8” Line x 1/4” Pipe) 1/4” Screw In Flared Male (On Case Side) For Push In Line (Gas)	1	
12996CK	Repair Kit, A904/A500 Cooler Line Fitting (With 1/4” Pipe Fittings) A Fix For Cracked Cases At The Cooler Fittings (Gas Only) 5 Adapters & 1 Tap Tool (Adapter # S12996C-1)	1	
12996C-1	Adapter, A904/A500 (For The S12996CK Kit)	1	
12996D	Fitting, A500 Cooler Line (3/8” Line x 1/4” Pipe) Push In With Wire Type Clip	1	
12996D-5K	Clip Kit, A904/A500 Push In Cooler LIne (6 Clips & O-Rings) (For 1/2” Cooler Lines)	1	

© Whatever It Takes Transmission Parts. Inc.

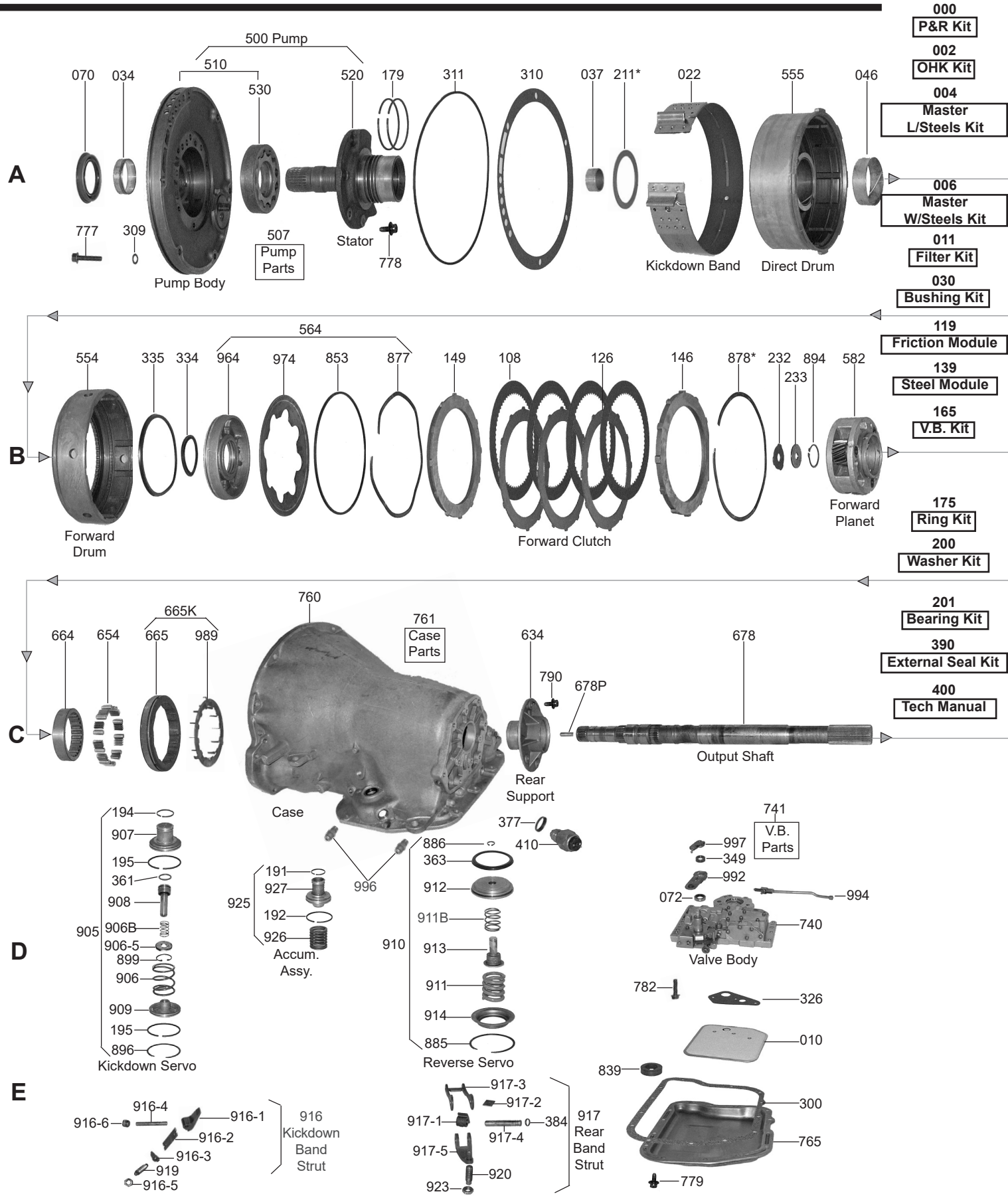

000 P&R Kit
002 OHK Kit
004 Master L/Steels Kit
006 Master W/Steels Kit
011 Filter Kit
030 Bushing Kit
119 Friction Module
139 Steel Module
165 V.B. Kit
175 Ring Kit
200 Washer Kit
201 Bearing Kit
390 External Seal Kit
400 Tech Manual

© Whatever It Takes Transmission Parts. Inc.

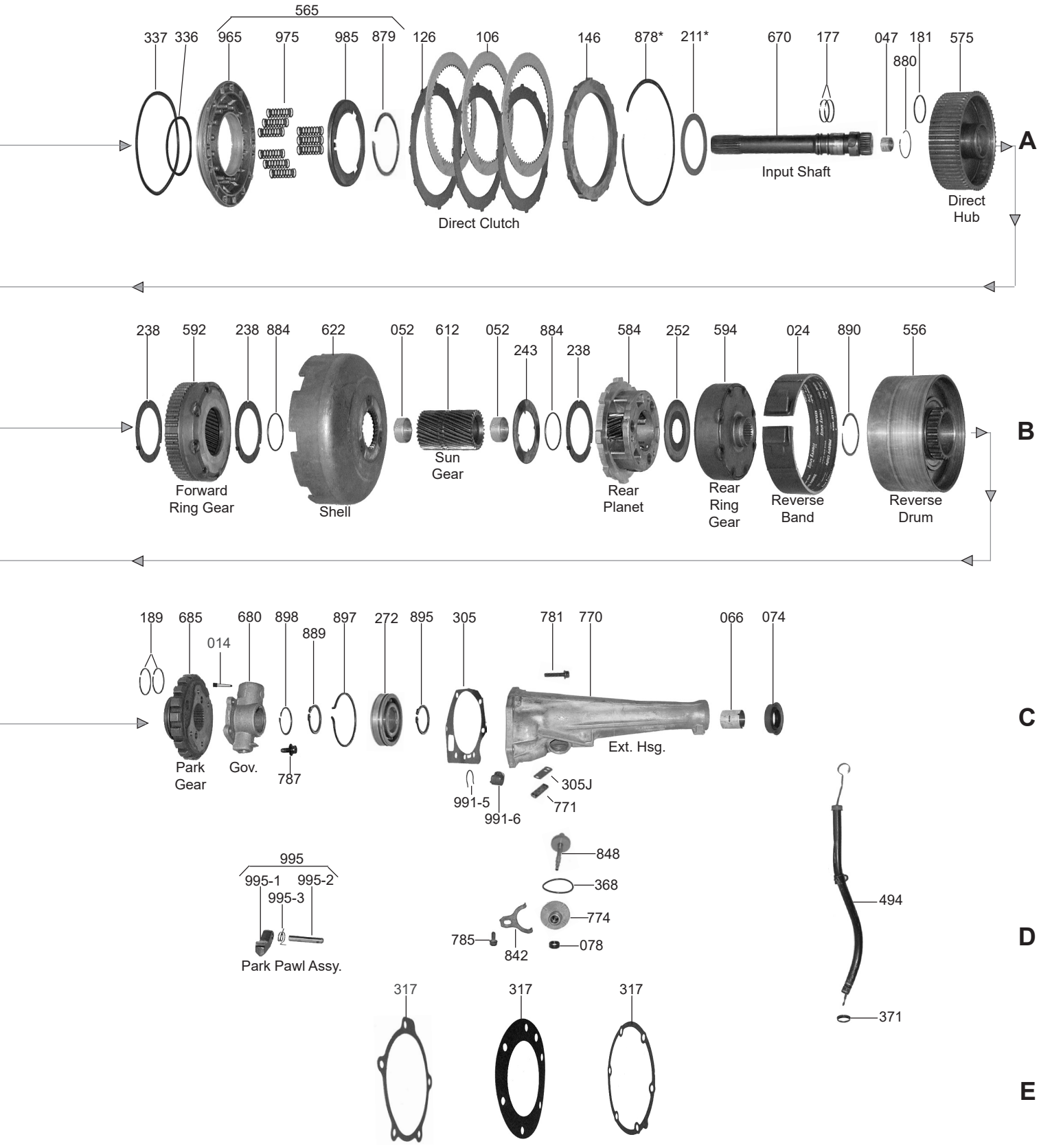

CHRYSLER

© Whatever It Takes Transmission Parts. Inc.

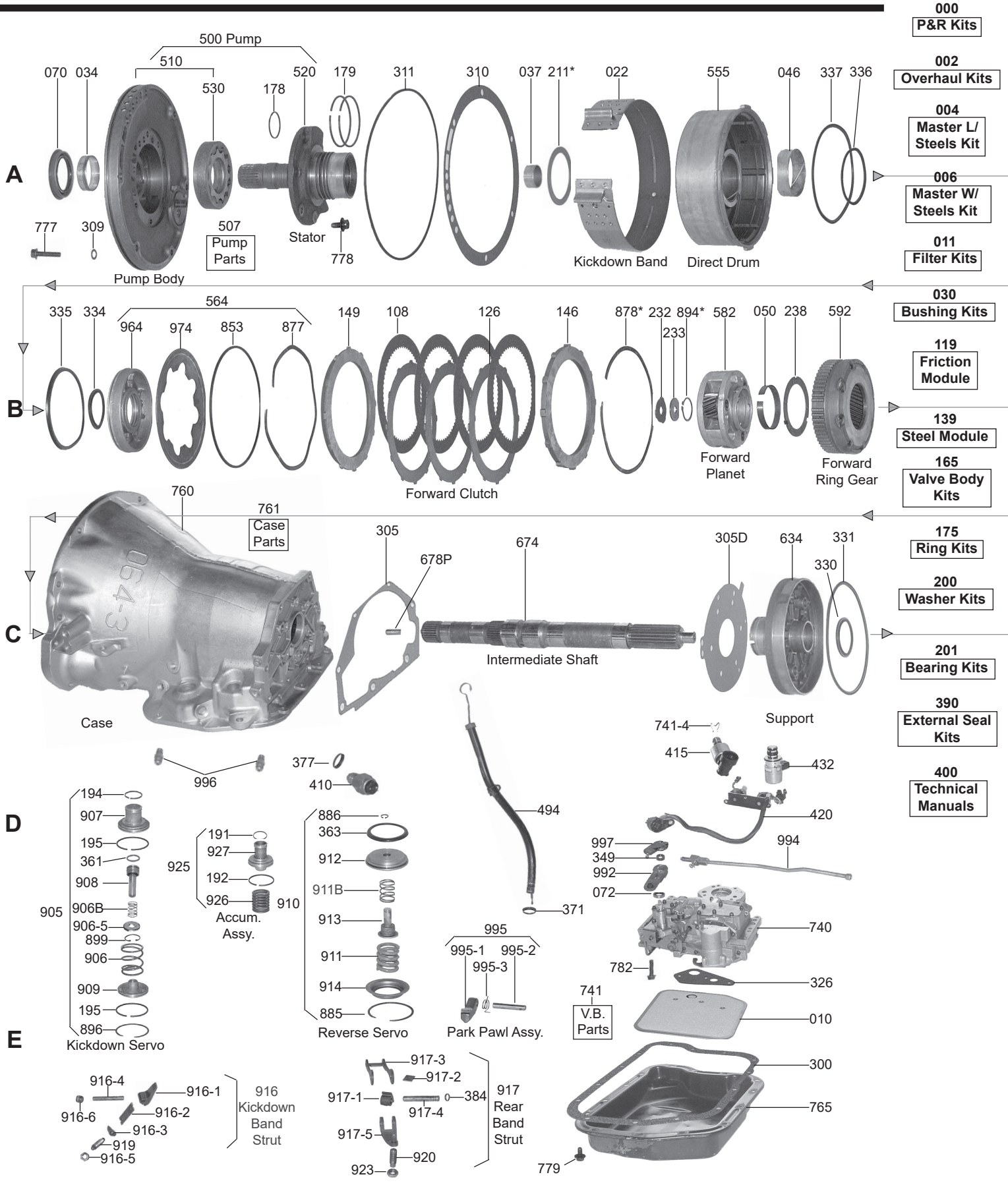

000 P&R Kits

002 Overhaul Kits

004 Master L/ Steels Kit

006 Master W/ Steels Kit

011 Filter Kits

030 Bushing Kits

119 Friction Module

139 Steel Module

165 Valve Body Kits

175 Ring Kits

200 Washer Kits

201 Bearing Kits

390 External Seal Kits

400 Technical Manuals

© Whatever It Takes Transmission Parts. Inc.

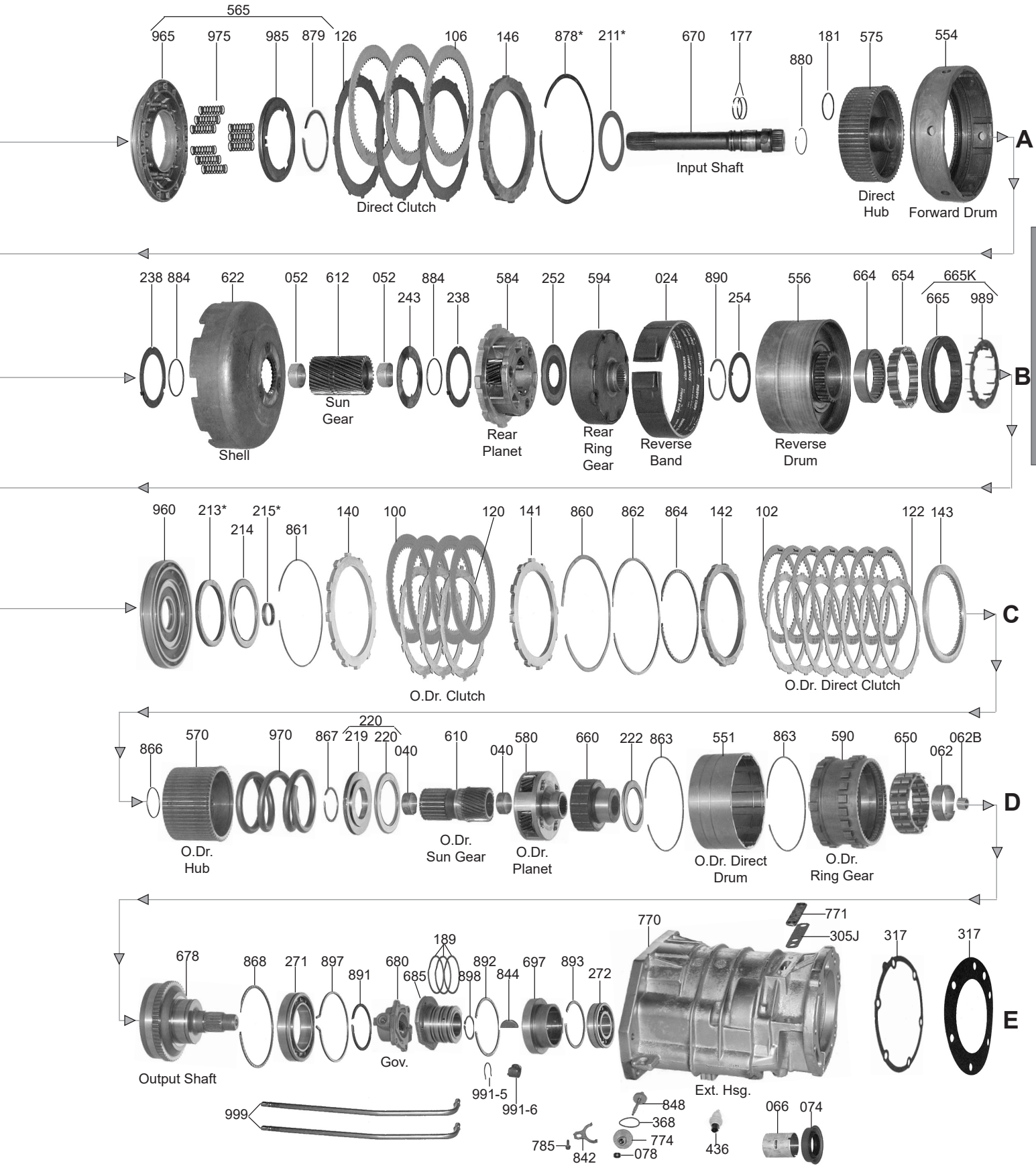

CHRYSLER

© Whatever It Takes Transmission Parts. Inc.

PART #	PAPER & RUBBER KIT	QTY	REFERENCE #
22000	Paper & Rubber Kit, A727 1962-70	1	
22000C	Paper & Rubber Kit, A727 1971-94	1	
22000E	Paper & Rubber Kit, A518/A618 (W/Viton) 1990-03	1	

PART #	OVERHAUL KITS	QTY	REFERENCE #
M581001	Bearing/Seal Sub Kit, A727 Extension Housing With Brake Drum	1	
22002	Overhaul Kit, A727 1962-70	1	
22002C	Overhaul Kit, A727 1971-94 (For 4x4 Sell 12074J Also)	1	
22002CA	Overhaul Kit, A727 (Short Ring Kit) 1971-94 (For 4x4 Sell 12074J Also)	1	
22002E	Overhaul Kit, A518/A618 (W/Viton) 1990-03 (For 48RE 2003-Up Use 22002GW)	1	
22002GW	Overhaul Kit, 48RE (With Molded Rubber Pan Gasket) 2003-07	1	

PART #	MASTER L/STEEL KIT	QTY	REFERENCE #
22004	Master L/Steels Kit, A727 1962-70	1	
22004C	Master L/Steels Kit, A727 1971-94 (For 4x4 Sell 12074J Also)	1	
22004E	Master L/Steels Kit, A518/A618 (W/Viton) 1990-97	1	
22004EA	Master L/Steels Kit, A518/A618 (W/Viton) 1998-03 (W/Hi-Energy Direct Friction)(Does Not Fit 2003-Up 48RE Use 22004G)	1	
22004GW	Master L/Steels Kit, 48RE (With Molded Rubber Pan Gasket) 2003-Up (With 2 Sided Overdrive Direct Frictions) (If Customer Has 1 Sided Overdrive Direct Frictions, Sell 9 Of The 12122A Also)	1	

PART #	MASTER W/STEEL KIT	QTY	REFERENCE #
22006	Master W/Steels Kit, A727 1962-70	1	
22006C	Master W/Steels Kit, A727 1971-94 (For 4x4 Sell 12074J Also)	1	
22006E	Master W/Steels Kit, A518/A618 (W/Viton) 1990-97	1	
22006EA	Master W/Steels Kit, A518/A618 (W/Viton) 1998-03 (W/Hi-Energy Direct Friction) W/10 Overdrive Frictions & 9 Overdrive Steels (.054") (For A618 With (.085") Direct Steels, Sell 4-22126B Also)	1	
22006GW	Master L/Steels Kit, 48RE (With Molded Rubber Pan Gasket) 2003-Up (With 2 Sided Overdrive Direct Frictions) (Retro Fits For The 1 Sided Friction)	1	

PART #	FILTER	QTY	REFERENCE #
12010A	Filter, A727 Small Dacron (2 Hole)	1	3621456
12010B	Filter, A727 Small Brass	1	3410253
12010C	Filter, A727/A518/A618 Large Dacron 1966-03	1	3515996
12010D	Filter, A727/A518/A618 Large Brass 1966-03	1	
12010J	Filter, A518/A618/48RE 1998-Up (Metal & Plastic) 1998-07	1	

PART #	FILTER KIT	QTY	REFERENCE #
22011A	Filter Kit, A727 Small Dacron (2 Hole)	1	
22011C	Filter Kit, A727/A518/A618 Large Dacron	1	
22011D	Filter Kit, A727/A518/A618 Large Brass	1	
12011E	Filter Kit, A727/A518/A618 Combo Small Dacron	1	
12011G	Filter Kit, A727/A518/A618 Combo Large Dacron	1	
22011J	Filter Kit, A518/A618/48RE 1998-07 (Metal & Plastic)	1	

PART #	MISC. FILTERS	QTY	REFERENCE #
12014	Screen, A727/A518 Governor	1	3743519
12018	Screen, A727/A518 Valve Body Regulator Feed Line	1	
12484	Orifice Screen, A518/A618/48RE Overdrive Piston Retainer	1	4412583

PART #	BANDS	QTY	REFERENCE #
22022A	Band, A727/A518/A618/48RE Kickdown Flex	1	3621491
22022AHP	Band, 46/47/48RE Kickdown (Rigid)(Hi-Performance)	1	
22022AK	Band, A727/A518/A618/48RE Kickdown Flex (W/Kevlar)	1	
22022AS	Band, A727/A518/A618/48RE Kickdown Flex (Slip On)	1	
22022B	Band, A727 Kickdown Rigid	1	2124342
22022BH	Band, A727 Kickdown Rigid (Wide, Hemi)	1	
22022BK	Band, A727 Kickdown Rigid (Wide, Hemi) (W/Kevlar)	1	
22022BS	Band, A727 Kickdown Rigid (W/3 Grooves)	1	
22024	Band, A727/A518 Reverse (Fits 6"OD Drum) 1962-Up	1	1942133

© Whatever It Takes Transmission Parts. Inc.

22024A	Band, A727/A518 Reverse (W/Heavy Duty Ends) (Fits 6”OD Drum) 1962-Up	1	4505091
22024B	Band, A727/A518/A618/48RE Reverse (Fits 6 1/4”OD Drum) L1991-Up	1	4471476
22024C	Band, A618/48RE Reverse Double Wrap (Fits 6 1/4”OD Drum) 1996-Up	1	4531231

PART #	BUSHINGS	QTY	REFERENCE #
22030	Bushing Kit, A727 1962-70	1	
22030B	Bushing Kit, A727/A518 (W/Out Overdrive Section) 1971-E92	1	
12030E	Bushing Kit, A518/A618 (Overdrive Section Only) 1990-Up	1	
22030EB	Bushing Kit, A518/A618/48RE (W/Out Overdrive Section) 1990-E92	1	
22030EC	Bushing Kit, A518/A618/48RE (W/Out Overdrive Section) L1992-Up	1	
22034	Bushing, A727/A518/A618 Pump Body (Babbit)	1	2205031
22034A	Bushing, A727/A518/A618 Pump Body (Bronze) 1962-E92	1	2466324
22034B	Bushing, A727/A518/A618/48RE Pump Body (Bronze)(W/Indented Oil Pockets) L1992-Up	1	4531163
22034D	Bushing, Bushing, A727/A518/A618 Pump (Enhanced W/CT-101 Dry Lubricant)(W/Indents For Better Oil Retention)	1	
22037	Bushing, A727 Stator (Rear) 1962-66	1	2205240
22037B	Bushing, A727/A518 Stator (Rear) (1 1/8”ID) 1967-95	1	2801348
22037C	Bushing, A727/A518/A618/48RE Stator (Rear) (1 1/4”ID) 1996-Up	1	
12040	Bushing, A518/A618 Overdrive Sun Gear (Rear) No Flange (1.42”OD) (Also Same As The Front Bushing W/No Flange 1989-99)	1	
12040A	Bushing, A518/A618/48RE Overdrive Sun Gear (Front) W/Flange (1.42”OD) 1989-99	1	
12040AB	Bushing, A518/A618 Overdrive Sungear (Front)(With Flange)(Bronze) 1990-Up	1	
12040B	Bushing, A518/A618/48RE Overdrive Sun Gear (Front) No Flange (1.50”OD) 1999-Up	1	
22046	Bushing, A727 Direct Drum (Narrow) 1962-70	1	2205241
22046C	Bushing, A727/A518/A618/48RE Direct Drum (W/Oil Groove) 1971-Up	1	4058647
22047	Bushing, A727/A518 Input Shaft (.635”ID) 1962-89	1	3681709
22050E	Bushing, A518/A618/48RE Front Planet Ring Gear (Teflon) (Fits The 5 & 6 Gear Steel Front Planet)	1	
22052	Bushing, A727/A518/A618 Forward/Rear Sun Gear (Front & Rear Bushing)(.505” Wide) 62-Up	2	1736520
22052B	Bushing, A727/A518/A618/48RE Forward/Rear Planet Sun Gear (Rear Bushing)(.750” Wide)	2	
12062	Bushing, A518/A618/48RE Output Shaft To Overdrive Sprag Race (2.144”ID) 1989-Up	1	4461006
12062B	Bushing, A518/A618/48RE Output Shaft To Intermediate Shaft (.605”ID) 1989-Up	1	4461007
12062BB	Bushing, A518/A618/48RE Output Shaft To Intermediate Shaft (.605”ID)(Bronze)1989-Up	1	
36066	Bushing , A727/A518/A618/48RE Extension Housing (1.690”ID)(Bronze)(Does Not Fit 48RE 03-Up)	1	2801724
22066G	Bushing, 48RE Extension Housing (2.300”OD)(2.168”ID) 2003-Up	1	
36066T	Bushing , A727/A518/A618 Extension Housing (1.690”ID)(Teflon Coated)	1	

PART #	METAL CLAD SEALS	QTY	REFERENCE #
22070	Seal, A727/A518/A618/48RE Front	1	3515137
22072	Seal, A727/A518/A618 Manual Shaft (1/4” Thick) 1966-Up	1	3878447
22072A	Seal, A727/A518/A618/48RE Manual Shaft (3/8” Thick) 1966-Up	1	2466842
36074	Seal, A727/A518/A618 Rear W/Out Boot	1	3515383
22074A	Seal, A727/A518 Rear W/Bolt On Yoke (2 3/8”OD) 1962-92	1	2205080
22074AA	Seal, A727/A518 Rear W/Bolt On Yoke (2 3/4”OD) 1993-Up	1	4412507
36074B	Seal, A727/A518/A618 Rear W/Boot	1	
22074G	Seal, 48RE (Rear) 2WD (2.985”OD) 2003-Up	1	52854126AA
12074J	Seal, A727/A518/A618/48RE Extension Housing 4x4 (2.568”OD)	1	4269956/AB
44078A	Seal, A727/A518/A618 Speed-O Shaft (With Spring)	1	25519078
44078X	Seal, A518/A618 Speed-O Shaft (Without Spring)	1	

PART #	FRICTION CLUTCH	QTY	REFERENCE #
12100	Friction, A518/A618 Overdrive Clutch (.087”) (Flat) 1990-Up	2-4	4461045
12100A	Friction, A518/A618 Overdrive Clutch (.087”) (Waved) 1990-Up Hi-Energy (Retro Fits Early)	4-6	4461181
12100H	Friction, A518/A618 Overdrive Clutch (.087”)(Flat)(GPZ) 1988-Up	4-6	
12102	Friction, A518/A618 Overdrive Direct Clutch (.063”) 1988-Up	6-10	4461042
22102E	Friction, A618 Overdrive Direct Clutch (.048”) 54 Teeth (Hi-Energy) (1 Sided Friction, Internal Teeth) 2003-Up (Must Sell The Customer The Double Sided Frictions And Steels) (One Sided Frictions Are No Longer Available)	12	
22122E	Friction, A618(48RE) Overdrive Direct Clutch (.048”) 12 Teeth (Hi-Energy) (1 Sided Friction, External Teeth) 2003-Up	11	
22106	Friction, A727/A518/A618 Direct Clutch (.096”) (Waffle) 1962-Up	3-4	4329846
22106A	Friction, A727/A518/A618 Direct Clutch (.096”) (Hi-Energy) 1992-Up	3-4	
22106B	Friction, A518/A618 Direct Clutch (.084”) (Hi-Energy) 1997-Up	3-5	
22106BS1	Friction, A518/A618 Direct Clutch (.084”)(Stage 1) 1997-Up1	1	
22106CS1	Friction, A727/A518/A618 Direct Clutch (.090”)(Stage 1) 1962-Up	3-5	
22106H	Friction, A727/A518/A618 Forward & Direct Clutch (.062”)(GPZ) 1962-Up (Also Fits 48RE Direct Clutch	3-7	

© Whatever It Takes Transmission Parts. Inc.

PART #	FRICTION CLUTCH (Continued)	QTY	REFERENCE #
22106HD	Friction, A727/A518/A618 Direct Clutch (.096") (Heavy Duty) 1962-Up	3-4	
22106HP	Friction, A727/A518/A618 Direct Clutch (.096") (Hi-Performance) 1962-Up (Use 22108HP)	3-4	
22106HPK	Friction Kit, A727/A518/A618 Direct Clutch (.096") (Hi-Performance) 1962-Up (4 Per Kit)	1	
22106PPK	Friction/Steel Kit, A727/A518/A618 Direct Clutch (Power Pack) Alto	1	
22106S1	Friction, A727/A518/A618 Forward & Direct Clutch (.059")(Stage 1) 1962-Up	3-4	
22108	Friction, A727/A518/A618 Forward Clutch (.061") 62 Teeth (Smooth) 1962-Up	4	4531067
22108A	Friction, A727/A518/A618 Forward Clutch (.065") 62 Teeth (Hi-Energy) 1962-Up (Kevlar)	4	
22108APPK	Friction/Steel Kit, A518/A618 Forward Clutch (Powerpak) 1990-92	1	
22108E	Friction, 48RE Forward Clutch (.061") 93 Teeth (Hi-Energy) 2003-Up	4	
22108EPPK	Friction/Steel Kit, 48RE Direct Clutch (Powerpak) 2003-Up	1	
22108HD	Friction, A727/A518/A618 Forward (.061") (Heavy Duty) 1962-Up	4	
22108HP	Friction, A727/A518/A618 Forward Clutch (.061") 62 Teeth (Hi-Performance) 1962-Up	4	
22108HPK	Friction Kit, A727/A518/A618 Forward Clutch (.061") 62 Teeth (Hi-Performace) 1962-Up (4 Per Kit)	1	
22119	Friction Module, A727 1962-Up	1	
22119E	Friction Module, A518/A618 1990-97	1	
22119EA	Friction Module, A518/A618 1998-Up (W/Hi-Energy Direct Frictions)(This Kit Has 2 Sided Overdrive Direct Frictions, If Customer Has The 1 Sided Friction, You Must Sell 9 Of The 12122A Also)	1	
22119EHP	Friction Module, A518/A618 (Hi-Perfromance) Red Eagle (Alto) 1990-97	1	
22119ES1	Friction Module, A518/A618 (Stage 1) 1990-Up	1	
22119FHP	Fri Module, A518/A618 (Hi-Performance)(Red Eagle) 1994-02 (Alto)	1	
22119G	Friction Module, 48RE 2003-Up (With 1 Sided Overdrive Direct Frictions)(When Out Use 22119GA)	1	
22119GA	Friction Module, 48RE 2003-Up (With 2 Sided Overdrive Direct Frictions & 93 Teeth Forward Frictions)	1	
22119GS1	Friction Module, 48RE (Stage 1) 2003-Up	1	
22119HP	Friction Module, A727 (Hi-Performance) Indy Reds (Allomatic)	1	
22119S1	Friction Module, A727 (Stage 1) 1962-Up	1	

PART #	STEEL CLUTCH	QTY	REFERENCE #
12120	Steel, A518/A618/48RE Overdrive Clutch (.068") 1988-Up	2-6	4461047
12120HP	Steel, A518 Overdrive Clutch (.068") 1988-Up (Kolene)	2-6	
12122	Steel, A518/A618/48RE Overdrive Direct Clutch (.069") 1988-Up	5-7	4461054
12122HP	Steel, A518 Overdrive Direct Clutch (.069") 1988-Up (Kolene)	5-7	
12122A	Steel, A518/A618/48RE Overdrive Direct Clutch (.054") 1996-Up	5-7	
12122AHP	Steel, A518/A618 Overdrive Direct Clutch (.054") 1996-Up (Kolene)	5-7	
22122E	Friction, 48RE Overdrive Direct Clutch (.048") 12 Teeth (Hi-Energy) (1 Sided Friction, External Teeth) 2003-Up (Must Sell The Customer The Double Sided Frictions And Steels) (One Sided Frictions Are No Longer Available)	11	
22126	Steel, A727/A518/A618/48RE Forward & Direct Clutch (.070")	6-8	2124826
22126B	Steel, A618 Direct Clutch (.085") 1998-Up	4-5	2124826AB
22126BK	Steel, A618 Direct Clutch (.085")(Kolene) 1998-Up	4-5	
22126G	Steel, 48RE Forward Clutch (067")(10 Teeth) 2003-Up	AR	
22126K	Steel, A727/A518/A618/48RE Forward / Direct Clutch (.070") (Kolene)	6-8	28701K
22126X	Steel, A727/A518/A618/48RE Forward / Direct Clutch (.090") (Oversize)	AR	
22137EPPK	Friction/Steel Module, A518/A618 Red Eagle & Kolene Power Pack (Contains: Forward/Direct/ Overdrive Power Packs)	1	
22137GPPK	Friction/Steel Module, 48RE Red Eagle & Kolene Power Pack (Contains: Forward/Direct/ Overdrive Power Packs) 2003-Up	1	
22139	Steel Module, A727 1962-Up	1	
22139HP	Steel Module, A727 (Hi-Performance) 1971-97	1	
22139E	Steel Module, A518/A618 1990-97	1	
22139EHP	Steel Module, A518 1990-93 (High Performance)	1	
22139EA	Steel Module, A518/A618 1998-Up (Except 48RE)	1	
22139GHP	Steel Module, 48RE (Hi-Performance) 2003-Up (Kolene)	1	

PART #	CLUTCH PRESSURE PLATES	QTY	REFERENCE #
12140	Pressure Plate, A518/A618 Overdrive Clutch (.373")(Front) 1988-92 (For 1993-Up Use 12141)	1	4461048
12141	Pressure Plate, A518/A618 Overdrive Clutch (.216")(Rear) 1988-Up (Also Fits Overdrive Clutch (Front) (#140) 1993-Up)	1	4461033
22140B	Pressure Plate, 48RE Overdrive Clutch (.237") (Front) 2003-Up	1	
22141G	Pressure Plate, 48RE Overdrive Clutch (.122") Rear (Stepped) 2003-Up (.122" At Lugs And .235" At Step) (For A 6 Clutch Overdrive)	1	
12142	Pressure Plate, A518/A618/48RE Overdrive Direct Clutch (Front) (.212")	1	4461031
12142A	Pressure Plate, A518/A618/48RE Overdrive Direct Clutch (Front) (.085")	1	

© Whatever It Takes Transmission Parts. Inc.

12143	Pressure Plate, A518/A618/48RE Overdrive Direct Clutch (Rear) (.215")	1	4461030
22146	Pressure Plate, A727/A518/A618/48RE Forward / Direct Clutch (Top)(.285")(12 Teeth)	1	2801961
22149	Pressure Plate, A727/A518/A618/48RE Forward Clutch (Bottom) (Beveled)	1	2466803

PART #	VALVE BODY KITS	QTY	REFERENCE #
S22165	Valve Body Kit, A727 (Superior)	1	KTF-TC
T22165	Valve Body Kit, A727 (No Yo-Yo) (Transgo)	1	SK®TFSC
T22165B	Valve Body Kit, A518/A618 Diesel 1988-2002 (Transgo) (Will Not Work On 2003-Up 48RE, Sell T22165G)	1	SK®TFOD-DSL
T22165G	Valve Body Kit, 48RE V-10 & Diesel 2003-Up	1	
S22167	Valve Body Kit, A518/A618 Gas/Diesel 1989-98 (Superior) (Can Use S22167A)	1	K500-618
T22167	Valve Body Kit, A518/A618 Junior (Gas Only) 1989-Up (Transgo) (For 48RE 2003-Up Use T22165G)	1	SK®TFOD-DSL
S22167A	Valve Body Kit, A518/A618 (Gas/Diesel) 1999-04 (Superior)(Fits All Except 48RE)	1	k500-618-L
S22167G	Valve Body Kit, 48RE 2003-Up (Fits All Diesel With Throttle Valve Actuator)(Superior)(Fits 48RE Only)	1	
T22169	Reprogramming Kit, A727 (Heavy Duty & Hi-Performance) (Transgo)	1	TF-1
T22169B	Reprogramming Kit, A518/A618 (Heavy Duty & Hi-Performance) (Transgo)(Will Not Work On 2003-Up 48RE, Sell T22165G)	1	TFOD-HD2
T22169E	Reprogramming Kit, 46/47RE/RH For HD and HP Trucks - Option for lock-up (TransGo)	1	
T22169G	Reprogramming Kit, 48RE For HD and HP Trucks (TransGo)	1	
A22171	Valve Body Kit, A727 (Fairbanks) 1962-Up	1	10430
T22171	Reprogramming Kit, A727 (Full Race) (Transgo)	1	TF-2
A22171B	Valve Body Kit, A518/A618 (Transaction Kit) 1990-98 (Fairbanks)	1	10518
T22173	Reprogramming Kit, A727 (Manual Shift) (Transgo)	1	TF-3
T22173B	Reprogramming Kit, A518/A618 (Manual Shift) (Transgo)	1	TFOD-3

PART #	OIL SEALING RINGS	QTY	REFERENCE #
22175	Ring Kit, A727 Complete 1962-70	1	
22175A	Ring Kit, A727 Short 1962-70	1	
22175B	Ring Kit, A727 Short 1971-94	1	
22175C	Ring Kit, A727 Complete 1971-94	1	
22175D	Ring Kit, A727 1962-94	1	
22175E	Ring Kit, A518/A618/48RE 1990-Up	1	
22175ET	Ring Kit, A518/A618/48RE (Teflon) 1990-Up	1	
22177	Ring, A727 Input Shaft (1.125"OD) (Metal) 1962-66	2	1942041
12177A	Ring, A727 Accumulator Piston (Small)(1.062"OD)(Metal)	1	
22177A	Ring, A727/A518 Input Shaft (1.175"OD) (Metal) 1967-Up	2	2801054
22177AT	Ring, A727/A518/A618 Input Shaft (1.175"OD)(Teflon) 1967-Up	2	
12177AT	Ring, A727 Accumulator Piston (Small)(1.062"OD)(Teflon)	1	
22177E	Ring, A727/A518/A618/48RE Input Shaft (1.246"OD) (Metal) 1994-Up	2	
22177ET	Ring, A727/A518/A618/48RE Input Shaft (1.246"OD) (Teflon) 1994-Up	2	4741836
22177FT	Ring, A727/A518/A618/48RE Input Shaft (1.246"OD) (Torlon, Butt Cut) 1994-Up	2	
22178GT	Ring, 48RE Stator Shaft (Front) Teflon (Lap Joint) 2003-Up	2	
22179	Ring, A727 Stator Shaft (2.625"OD) (Metal) 1962-70	2	2124813
22179A	Ring, A727/A518/A618/48RE Stator Shaft (2.625"OD) (Aluminum) 1971-Up	2	3515321
22179B	Ring, A727/A518/A618/48RE Stator Shaft (2.625"OD) (Metal) 1978-Up (Steel Plated)	2	3743689
22179BT	Ring, A727/A518/A618/48RE Stator Shaft (2.625"OD)(Teflon)(High Performance) 1962-Up	2	
22181	Ring, A727/A518/A618/48RE Forward Clutch Drum (1.875"OD) (Metal)	1	4058443
12189	Ring, A727 Governor (2.250"OD) (Butt Joint) (Metal) 1962-94	2-3	1942109
12189A	Ring, A727 Governor (2.250"OD) (Lock Joint) (Metal) 1962-94	2-3	2892358
12189B	Ring, A518/A618/48RE Governor (Metal) 1989-Up	2-3	
22191	Ring, A727 Accumulator Piston (Small) (1.062"OD) Use 12177A	1	
12191CT	Ring, A518/A618 3-4 Accumulator Piston (Small, In Valve Body)(Teflon)(For D-Rings Use 12354AK)	1	
S12354AK	D-Ring Set, A727/A518/A618/48RE 3-4 Accumulator Piston (Contains: 2 D-Rings & 2 PTFE Sealing Rings)	1	
12192	Ring, A727/A518/A618/48RE Accumulator Piston (Large) (2.00"OD) (Metal)	1	1315158
12192T	Ring, A727/A518/A618/48RE Accumulator Piston (Large) (2.00"OD) (Teflon)	1	
12192CT	Ring, A518/A618 3-4 Accumulator Piston (Large, In Valve Body)(Teflon)(For D-Rings Use 12354AK)	1	49560081
22194	Ring, A727/A518/A618/48RE Kickdown Servo Piston (Small) (1.500"OD) (Metal) 1962-Up	1	3165806
22195	Ring, A727/A518/A618/48RE Kickdown Servo Piston (Large) & Cover (2.125"OD) (Metal) 1962-Up	2	1942123

PART #	WASHERS & BEARINGS	QTY	REFERENCE #
22200	Washer Kit, A727 1962-66	1	
22200A	Washer Kit, A727 1967-89	1	

© Whatever It Takes Transmission Parts. Inc.

PART #	WASHERS & BEARINGS (Continued)	QTY	REFERENCE #
22200B	Washer Kit, A727 1990-94	1	
22200E	Washer Kit, A518/A618 1990-Up	1	
22200EA	Washer Kit, A727/A518 4 Gear Planet (9 Piece Kit) (With Selectives) 1990-95	1	
22200EB	Washer Kit, A518/A618 5 Gear Planet (9 Piece Kit) (With Selectives) 1996-Up	1	
22200EC	Washer Kit, A618 6 Gear Planet (9 Piece Kit) (With Selectives) 1996-03	1	
22200G	Washer Kit, 48RE 2003-Up (6 Gear Planets W/Selectives)	1	
12201A	Bearing Kit, A518/A618 1989-Up (Torrington)	1	
22211	Washer, A727/A518/A618/48RE Stator To Direct Drum (.043")	1	2204621
22211A	Washer, A727/A518/A618/48RE Stator To Direct Drum (.061")	1	2204622
22211B	Washer, A727/A518/A618/48RE Stator To Direct Drum (.084")	1	2204623
22211C	Washer, A727/A518/A618/48RE Stator To Direct Drum (.102")	1	2400284
12213	Race, A518/A618/48RE Overdrive Piston To Hub (.108")	1	4431730
12213A	Race, A518/A618/48RE Overdrive Piston To Hub (.123")	1	4431585
12213B	Race, A518/A618/48RE Overdrive Piston To Hub (.138")	1	4431731
12213C	Race, A518/A618/48RE Overdrive Piston To Hub (.155")	1	4431586
12213D	Race, A518/A618/48RE Overdrive Piston To Hub (.168")	1	4431732
12213E	Race, A518/A618/48RE Overdrive Piston To Hub (.183")	1	4431587
12213G	Race, A518/A618/48RE Overdrive Piston To Hub (.198")	1	4431733
12213H	Race, A518/A618/48RE Overdrive Piston To Hub (.213")	1	4431588
12213HA	Race, A518/A618/48RE Overdrive Piston To Hub (.228")	1	4431734
12213J	Race, A518/A618/48RE Overdrive Piston To Hub (.243")	1	4431590
S12213K	Race Kit, A518/A618/48RE Overdrive Piston To Hub (Sonnax) (Contains: 1 Race & 3 Shims)	1	12783-01K
12214	Bearing, A518/A618/48RE Overdrive Piston To Hub	1	4446742
12215	Spacer, A518/A618/48RE Intermediate Shaft To Overdrive Planet (.158")	1	4431916
12215A	Spacer, A518/A618/48RE Intermediate Shaft To Overdrive Planet (.175")	1	4431917
12215B	Spacer, A518/A618/48RE Intermediate Shaft To Overdrive Planet (.193")	1	4431918
12215C	Spacer, A518/A618/48RE Intermediate Shaft To Overdrive Planet (.211")	1	4431919
12219	Race, A518/A618/48RE Overdrive Planet To Hub	1	4461120
12220	Bearing & Race, A518/A618/48RE Overdrive Planet To Hub (Updated)	1	4740774
12221	Bearing, A518/A618/48RE Overdrive Planet To Hub (3.210"OD) (Use 12222 or 12220)	1	4461014
12221A	Bearing, A518/A618/48RE Overdrive Planet To Hub (3.853"OD) (Can Use 12220)	1	
12222	Bearing, A518/A618/48RE Overdrive Inner Sprag Race To Output Shaft (3.210"OD)	1	4461014
22232	Washer, A727 Output Shaft To Forward Drum (Metal) 1962-78	1	2400843
22232A	Washer, A727 Output Shaft To Forward Drum (3 Tab) 1978-89	1	3681688
12232D	Washer, 904/A500 Output Shaft .052" (3 Outer Tab) 1990-Up	1	
12232DA	Washer, A727/A518/A618/48RE Output Shaft (3 Outer Tabs) (.068") 1990-Up	1	4505186
12232DB	Washer, A727/A518/A618/48RE Output Shaft (3 Outer Tabs) (.083") 1990-Up	1	4505187
12232DS	Shim Kit, A518/A618/48RE (Goes Under # 232 Washer) (3 Each .015" & .025" Shims)	1	K055
22232S	Shim Kit, A727 (Goes Under #232 Washer) (3 Each .015" & .025" Shims) (Superior)	1	
22233	Race, A727 Output Shaft To Washer (For 22232A) 1978-89	1	4329806
12233D	Race, A727/A518/A618/48RE Output Shaft 1990-Up (Used With 12232DA & DB)	1	4505188
22238	Washer, A727 Forward Planet To Ring Gear, Ring Gear To Shell & Shell To Rear Planet (3 Tab For A 3 Gear Planet)	2-4	1942081
22238A	Washer, A727/A518 Forward Planet To Ring Gear, Ring Gear To Shell & Shell To Rear Planet (4 Tab) (2.530"ID)	2-4	2801060
22238B	Washer, A618 Forward Planet To Ring Gear And Shell To Rear Planet (4 Tab)(2.245"ID) 1994-03	2-4	
22238D	Washer, A727/A518/A618 Forward Planet To Ring Gear (5 Tab For A 5 Gear Planet) 1996-03	2-4	4539129
22238E	Washer, A727/A518/A618 Forward Planet To Ring Gear, Ring Gear To Shell & Shell To Rear Planet (6 Tab)(2.525"ID)(3.405"OD) 1996-03 (Also Fits A618 (48RE) Forward Ring Gear To Shell) 2003-07	1-2	
22238EA	Washer, A618 Forward Planet To Ring Gear (6 Tab)(2.525"ID)(3.700"OD) 2003-07	1	52854039AA
22238EB	Washer, 48RE Shell To Rear Planet 2003-07 (Use 22252B)	1	4618000
S22239AK	Shim Kit, A727/A518/A618/48RE (Goes Under #238) (10 Per Kit) Sonnax	1	22700-Z
22243	Race, A727/A518/A618/48RE Driving Shell (Rear) (3.460"OD) 1962-02	1	1942080
22243G	Race, A618 (48RE) Driving Shell (Rear) (3.730"OD) 2003-Up	1	52854101AA
22252	Race, A727/A518/A618 Rear Planet To Rear Ring Gear (With Splines On The ID)(3.365"OD) 1962-02	1	2400580
22252B	Washer, 48RE Rear Planet To Ring Gear (6 Tabs)(2.245"ID)(3.700"OD) (Also Fits Shell To Rear Planet #238) 2003-07	2	4618000
22254	Washer, A518 Under Snap Ring To Rear Band Drum (1 Tab) 1989-90 (1988 Did Not Use This)	1	52118059
22254A	Washer, A518/A618/48RE Under Snap Ring To Rear Band Drum (2 Tab) 1991-Up	1	52854076AA
S22257	Bearing, A727/A518/A618/48RE Case Repair (Sonnax)	1	22556-BRG
12271	Ball Bearing, A518/A618/48E Output Shaft (Front) (2.750"ID) (W/Snap Ring Groove)	1	4461008
12271-1	Shim, A518/A618/48RE Sets Behind Bearing #271 To Take Up Excessive End Play)(.060"Thick)	1	
22272A	Ball Bearing, A727 Output Shaft (Rear) (1.375"ID) W/Snap Ring Groove	1	2466224
22272AA	Ball Bearing, A727 Output Shaft (Rear) (1.230"ID) W/Snap Ring Groove	1	4130537
22272B	Bearing, A727 Output Shaft (W/Bolt-On Yoke)	1	1672194

© Whatever It Takes Transmission Parts. Inc.

22272E ..... Ball Bearing, A518/A618/48RE Output Shaft (Rear)(2.835”OD)(1.375”ID) Has No Snap Ring Groove 1

PART #	GASKETS & RUBBER COMPONENTS	QTY	REFERENCE #
22300	Gasket, A727/A518/A618/48RE Pan	1	2464324
22300W	Gasket, A618/48RE (Plastic With Rubber Bead) 2003-Up	1	
12305A	Gasket, A727 Extension Housing 1966-94	1	2466954
12305AE	Gasket, A518 Extension Housing 1989 (Also Fits Under Overdrive Piston Retainer)	1	4471564
12305AF	Gasket, A518/A618/48RE Extension Housing 1990-Up	1	4531192
22305D	Gasket, A518/A618/48RE Overdrive Piston Retainer 1991-Up (Can Use This Gasket & 12305AF For 1990 Models)	1	
12305J	Gasket, A727/A518/A618/48RE Output Shaft Bearing Cover	1	266049
44309	Gasket, A727/A518/A618/48RE Pump Bolt Washer	6	3884683
22310	Gasket, A727/A518/A618/48RE Pump	1	4028377
22311	O-Ring, A727/A518/A618/48RE Pump	1	1942021
12325A	Gasket, A518/A618/48RE Lock-Up & Overdrive Solenoid 1988-97	1	
12325B	Gasket, A518/A618/48RE Lock-Up & Overdrive Solenoid 1998-Up	1	
12325C	Gasket, A518/A618/48RE Governor Pressure Solenoid 1988-Up	1	
12326	Gasket, A727/A518/A618/48RE Filter	1	
12330	Lip Seal, A518/A618/48RE Overdrive Clutch Piston (Inner)	1	
12331	Lip Seal, A518/A618/48RE Overdrive Clutch Piston (Outer)	1	
22334	Lip Seal, A727/A518/A618/48RE Forward Clutch (Inner) 1962-Up	1	1942054
22335	Lip Seal, A727/A518/A618/48RE Forward Clutch (Outer) 1962-Up	1	2124835
22336A	Lip Seal, A727 Direct Clutch (Inner) 1962-71	1	2124820
22336AK	Lip Seal Kit, A727 Direct Clutch 1962-71	1	
22336B	Lip Seal, A727/A518/A618/48RE Direct Clutch (Inner) 1972-Up	1	3410226
22336BA	Lip Seal, A727/A518/A618/48RE Direct Clutch (Inner)(Vamac)(Updated) Will Retro Fit 1972-Up	1	
22336BK	Lip Seal Kit, A727/A518/A618/48RE Direct Clutch 1972-Up	1	
22337A	Lip Seal, A727 Direct Clutch (Outer) 1962-71	1	2124821
22337B	Lip Seal, A727/A518/A618/48RE Direct Clutch (Outer) 1972-Up	1	4058484
12347	O-Ring, A518/A618/48RE Electric Connector (15/16” Connector)	2	
12349	Seal, A727/A518/A618/48RE Throttle Lever Shaft	1	2466548
12354AK	D-Ring Set, A518/A618/48RE Accumulator (2 D-Rings) 1960-Up	1	
S12354AK	Seal Ring/D-Ring Set, A727/A518/A618/48RE Accumulator (For Sonnax Accumulator Kit S12927HD)(Contains: 2 D-Rings And 2 PTFE Sealing Rings)(Sonnax)	1	
S22361K	Seal Kit, A727/46RE/46RH/47RE/47RH/48RE Kickdown Servo (Super Servo)(Contains 5 Seals/ Sealing Rings, 3 O-Rings And 1 Retaining Ring)(Sonnax)	1	
22363	Lip Seal, A727 Reverse Servo (2.812”OD)(Black) 1962-89	1	2464481
22363AA	Lip Seal, A727/A518 Reverse Servo (2.812”OD) (Viton)(Blue)	1	
22363B	Lip Seal, A618/48RE Reverse Servo (2.479”OD) (Viton)(Orange)	1	4531233
12368	O-Ring, A727/A518/A618/48RE Speed-O Housing (Red) 1966-Up	1	6031370
12371	Boot, A727/A518/A618/48RE Filler Tube 1997-Up	1	52118629
44371A	O-Ring, A727/A518/A618/48RE Filler Tube	1	6264902
12377A	Gasket/Washer, A727/A518/A618/48RE Neutral Safety Switch	1	2408143
22384	Seal, A727 Reverse Band Lever Shaft 1962-94	1	8634188
22384A	Seal, A518/A618/48RE Reverse Band Lever Shaft 1990-Up	1	6030910
22390	External Seal Kit, A727 Includes Seals 1966-Up	1	

PART #	TECHNICAL MANUALS	QTY	REFERENCE #
12400	Technical Manual, A727	1	83-727904TM
12400E	Technical Manual, A518/A618/48RE	1	TM42RE
22400E	Technical Manual, A518/A618/48RE (46RE/47RE/48RE)(Gas & Diesel)		

PART #	ELECTRICAL COMPONENTS	QTY	REFERENCE #
12410	Neutral Switch, A727 (3 Prong, Long) 1969-Up	1	2932820
12410A	Neutral Switch, A727/A518/A618 (Screw In)(3 Prong, Short) (Push On Connector) 1969-Up	1	4057750
12410B	Neutral Switch, A727/A518/A618 (Screw-In)(3 Prong Short) (Clip On Connector) 1996-03	1	
12410C	Neutral Switch, A518/A618/48RE (Push-In)(5 Prong) 6/2002-Up (Cast # 56045489AC) Square Body (2 Bolt)	1	
12415A	Sensor, A518/A618/48RE Governor Pressure (3 Pin) 1989-95 (Transducer)	1	56027562
12415B	Sensor, A518/A618 Governor Pressure (4 Pin Round Connector)(Transducer)(W/ TFT) 1996-99	1	56041403AA
12415C	Sensor, A518/A618 Governor Pressure (4 Blade Rectangular Connector) (Black Plastic) (Transducer)(With TFT) 2000-Up	1	56028196AD
22420	Solenoid, A518 Overdrive (Single) (2 Pin Case Connector)	1	4531253
12420	Solenoid, A518 Overdrive & Lock-Up (3 Pin Case Connector)(With TFT) 1988-95	1	4431954

© Whatever It Takes Transmission Parts. Inc.

PART #	ELECTRICAL COMPONENTS (Continued)	QTY	REFERENCE #
12420B	Solenoid, A518 Overdrive & Lock-Up (8 Pin Case Connector) (W/4 Pin Oval Governor Sensor Connector) 1996-99	1	52118652
12420BK	Solenoid Kit, A518 Overdrive & Lock-Up (8 Pin Case Connector) (W/4 Pin Governor Sensor) 1996-99 (Will Retro Fit 3 Pin Governor Sensor)	1	
12420C	Solenoid, A518/A618/48RE Overdrive & Lock-Up (8 Pin Case Connector)(With 4 Blade Rectangle Governor Sensor Connector) 2000-Up	1	5211500AB
12432A	Solenoid, A518/A618/48RE Governor Pressure 1994-Up (Most)	1	4617210
12432AK	Repair Kit, A518/A618/48RE Governor Pressure Solenoid 1994-Up (Fixes 6 Solenoids)	1	

PART #	MISC. COMPONENTS	QTY	REFERENCE #
12432BK	Conversion Kit, A518/A618/48RE Governor Solenoid (Converts The Governor Solenoid To Use The GM # 34435B Solenoid)(Contains: Solenoid With Adapter Harness, Manifold Block, 4 Bolts & Gasket) 1994-Up	1	
92436	Sensor, A518/A618/48RE Output Speed Sensor (.928"OD Threads)	1	4800879
12445AK	Repair Kit, A518/A618/48RE Neutral Safety Switch (3 Pin) 1988-04	1	83506534
12445BK	Repair Kit, A518/A618/48RE External Wire Harness (8 Pin Connector With 8 Crimp Style Connectors) 1993-Up	1	
12447	Recalibrator, Chrysler Electronic Speedometers	1	RECAL-CH
12447A	Inverter, A518/A618 Overdrive	1	
22460G	Transmission Throttle Valve Actuator, 48RE TTVA (5.9L Diesel) 2005-Up (6 Pin Connector, 2 Bolts Hold Actuator To Side Of Case)	1	
12483P	Park Reaction Plug, A727	1	
12484	Orifice Screen, A518/A618/48RE For Overdrive Piston Retainer	1	4412583
22487	E-Clip, Chrysler Shift Linkage (10 Per Pack) Sonnax	1	
22487A	Grommet, A727 Cross Shaft Link (AMC/JEEP)	1	
22487B	Grommet, A727 Cross Shaft Link (Chrysler)	1	3467800
22487C	Grommet, A727 Manual Shaft	1	3575333
12487D	Hitch Pins, Chrysler	1	
NF-27	EMI Filter, A518/48RE(Wires Into TPS Signal)(Diesel Trucks (Fixes TCC Cycling)(ATSG)	1	

PART #	HARD PARTS	QTY	REFERENCE #
22500-1	Pump, A727 (1.125"ID Of Stator Bushing) 1962-66 (Fits Direct Drum With A Narrow Bushing)	1	
22500	Pump, A727 (1.175"ID Of Stator Bushing) 1967-70 (Fits Direct Drum With A Narrow Bushing)	1	
22500A	Pump, A727 (1.175"ID Of Stator Bushing) (With 1 Check Ball) 1971-77	1	
22500B	Pump, A727/A518 Non Lock-Up (1.175"ID Of Stator Bushing)(With 2 Check Balls) 1978-Up	1	
22500BA	Pump, A727/A518/A618/48RE Non Lock-Up (1 1/4"ID Of Stator Bushing)(W/2 Check Balls) 1994-Up	1	
22500C	Pump, A727/A518 Lock-Up (1.175"ID Of Stator Bushing)(With 3 Check Balls) 1978-Up	1	
22500CA	Pump, A727/A518/A618/48RE Lock-Up (1 1/4"ID Of Stator Bushing)(With 3 Check Balls) 1994-Up	1	4796467AB
22500D	Pump, A618 (48RE) Lock-Up (1 1/4" ID Stator Bushing)(With 3 Check Balls)(With Ring Groove On Stator Shaft) 2003-Up 2003-Up	1	
22510	Pump Body W/Gears, A727 1962-70	1	
22510A	Pump Body W/Gears, A727/A518 (15 Teeth On Outer Gear) 1971-Up	1	
22510B	Pump Body W/Gears, A727/A518/A618/48RE (12 Teeth On Outer Gear) L1989-E96 (Can Use 22510C)	1	
22510C	Pump Body W/Gears, A727/A518/A618/48RE (11 Teeth On Outer Gear) L1996-Up (Also Fits 48RE 2003-Up With Cast # 52854006AA (Can Use 22510B)	1	
22520-1	Stator, A727 (1.125"ID Of Bushing) 1962-66 (Fits Direct Drum With A Narrow Bushing)	1	
22520	Stator, A727 1967-70	1	2801045
22520A	Stator, A727 (W/1 Check Ball) 1971-77	1	3878343
22520B	Stator, A727/A518 Non Lock-Up (1 1/8"ID Rear Bushing) 1978-Up (W/2 Check Balls)	1	4058929
22520BA	Stator, A727/A518/A618/48RE Non Lock-Up (1 1/4"ID Rear Bushing) (W/2 Check Balls)	1	
22520C	Stator, A727/A518 Lock-Up (1.175"ID Rear Bushing)(W/3 Check Balls) 1978-Up	1	4028273
22520CA	Stator, A727/A518/A618/48RE Lock-Up (1 1/4"ID Rear Bushing) 1994-Up (W/3 Check Balls)	1	
22520D	Stator, A618 (48RE) L/Up (1 1/4"ID Rear Bushing) 2003-Up (W/3 Check Balls) Has An O-Ring Groove On Stator Shaft	1	

PART #	PUMP COMPONENTS	QTY	REFERENCE #
22507A	Pump Baffle Vent, A727/A518/A618/48RE (Plastic) 1971-Up	1	
22530	Pump Gears, A727/A518/A618/48RE (W/15 Teeth Outer Gear) (.747" Thick)	1	
22530A	Pump Gears, A727/A518/A618/48RE (W/15 Teeth Outer Gear) (.748" Thick)	1	
22530AA	Pump Gears, A727/A518/A618/48RE (W/15 Teeth Outer Gear) (.749" Thick)	1	
22530BA	Pump Gears, A518/A618/48RE (W/12 Teeth Outer Gear) (.748" Thick)	1	
22530C	Pump Gears, A518/A618/48RE (10 Teeth On Inner Gear)(11 Teeth On Outer)(.747" Thick)	1	

© Whatever It Takes Transmission Parts. Inc.

PART #	HARD PARTS (Continued)	QTY	REFERENCE #
12551A	Drum, A518 Overdrive (6 Clutch)	1	4461040
22551B	Drum, A618/48RE Overdrive (8 Clutch)(12 Or 24 Inner Lugs)	1	4461089
22554	Drum, A727/A518/A618 Forward Clutch (Rear Clutch Retainer)	1	3743622
22554G	Drum, 48RE Forward Clutch (Rear Clutch Retainer) 2003-Up	1	
22555	Drum, A727 Direct (Front Clutch) (4 Clutch) 1962-70	1	
22555A	Drum, A727/A518 Direct (Front Clutch) (3 Clutch) 1971-Up	1	
22555AGK	Drum Kit, A727/A518/A618/48RE Direct (Front Clutch) (5 Clutch) 1971-Up (This Is A 3 Clutch Drum Converted Into A 5 Clutch Drum) (Contains: 22555A (Cut), 22965 (Cut), 5-22106B Frictions & 5-22126 Steels)	1	
22555B	Drum, A727/A518/A618/48RE Direct (Front Clutch) (4 Clutch) 1971-Up	1	4058437AB
22555G	Drum, 48RE Direct (Front Clutch) (5 Clutch) 2003-Up	1	52854151AA
22556	Drum, A727 Reverse (Uses Slide On Race) (12 Rollers) 1962-87	1	
22556A	Drum, A727/A518 Reverse (Uses Slide On Race) (12 Rollers) 1988-91 (This Drum Takes A Washer #254 Under Snap Ring #890)	1	4505095
22556AB	Drum, A727/A518 Reverse (W/Press On Race) (14 Roller) 1990-Up (This Drum Is 6 1/4"OD At The Band Surface)	1	4505095
22556AC	Drum, A518/A618/48RE Reverse (W/Press On Race) (14 Roller) 1990-Up (This Drum Is 6 1/4"OD At The Band Surface) (With 6 5/8"OD Shoulder)	1	52118057
22556ACK	Drum Kit, A618 Reverse (W/Press On Race) (14 Roller) 1990-Up	1	
22564	Piston Kit, A727/A518/A618/48RE Forward Clutch (.780" Thick Piston) 1966-Up	1	
22564A	Piston Kit, A727/A518/A618/48RE Forward Clutch (.840" Thick Piston) 1966-Up	1	
22565	Piston Kit, A727 Direct Clutch 1962-71	1	
22565A	Piston Kit, A727/A518/A618/48RE Direct Clutch (.285" Thick At The Edge Of Piston) 1972-Up	1	
22565AA	Piston Kit, A727/A518/A618/48RE Direct Clutch (.300" Thick At The Edge Of Piston) 1972-Up	1	
12570	Clutch Hub, A518/A618/48RE Overdrive Clutch (3" Tall)	1	4461072
22575	Clutch Hub, A727 Direct Clutch 1967-77	1	
22575A	Clutch Hub, A727 Direct Clutch 1978-89	1	
22575B	Clutch Hub, A727/A518/A618/48RE Direct Clutch 1990-Up	1	4617855
12580A	Planet, A518 Overdrive (4 Gear) Uses A Sun Gear With No I.D. Groove (Can Use 12580C)	1	4461017
12580AK	Planet Kit, A518/A618/48RE Overdrive (4 Gear) (W/22 Degree Teeth) 1989-94 (Sun Gear Has No I.D. Groove) (Contains: From # 864 To # 650)	1	
12580AA	Planet, A518/A618/48RE Overdrive (4 Gear) Straight Teeth	1	
12580AB	Planet, A518 Overdrive (4 Gear) (W/15 Degree Teeth) 1995-Up (Uses A Sun Gear W/1 I.D. Groove) Can Use 12580BB	1	
12580ABK	Planet Kit, A518/A618/48RE Overdrive (4 Gear) (W/15 Degree Teeth) 1995-Up (Sun Gear Has 1 I.D. Groove) (Contains: From # 864 To # 650)	1	4874392
12580B	Planet, A518/A618/48RE Overdrive (5 Gear) (W/22 Degree Teeth) 1989-94 (Uses A Sungear With No I.D. Groove) Can Use 12580C	1	
22580B	Planet, A518/A618/48RE Overdrive (5 Gear, Straight Teeth)	1	4461121
12580BB	Planet, A518/A618/48RE Overdrive (5 Gear) (W/15 Degree Teeth) 1995-Up (Uses A Sun Gear W/1 I.D. Groove)	1	
12580BBK	Planet Kit, A518/A618/48RE Overdrive (5 Gear) (W/15 Degree Teeth) 1995-Up (Sun Gear W/1 I.D. Groove) (Contains: From # 864 To # 650)	1	4874396
12580C	Planet, A518/A618/48RE Overdrive (6 Gear) (W/22 Degree Teeth) 1989-94 (Uses A Sun Gear With No I.D. Groove)	1	
12580CK	Planet Kit, A518/A618/48RE Overdrive (6 Gear) (W/22 Degree Teeth) 1989-94 (Contains: Planet, Sun Gear, Ring Gear & #12220)	1	
12580CA	Planet, A518/A618/48RE Overdrive (6 Gear) (W/15 Degree Teeth) 1995-Up	1	5093158AA
12580CAK	Planet Kit, A518/A618/48RE Overdrive (6 Gear) (W/15 Degree Teeth) 1995-Up (Contains: Planet, Sun Gear, Ring Gear & #12220)	1	
22582	Planet, A727 Forward (3 Gear) W/1st Design Splines) 1965-75	1	
22582A	Planet, A727/A518 Forward (3 Gear) W/2nd Design Splines 1976-95	1	4028110
22582AS	Planet, A727/A518/A618 Rear (4 Gear Straight Teeth) 1965-02	1	
22582B	Planet, A727 Forward (4 Gear) W/1st Design Splines 1965-75	1	
22582C	Planet, A727/A518/A618 Forward (4 Gear) W/2nd Design Splines 1976-95	1	4028120
22582CA	Planet, A727/A518/A618 Forward (4 Gear) W/3rd Design Splines 1996-Up	1	
22582CS	Planet, A727/A518/A618 Forward (4 Gear, Straight Teeth) W/2nd Design Splines 1976-95	1	
22582D	Planet, A727/A518/A618 Forward (5 Gear, Aluminum) W/2nd Design Splines 1976-95	1	
22582DA	Planet, A727/A518/A618 Forward (5 Gear, Aluminum) W/3rd Design Splines 1996-Up (Can Use 22582CA But Must Send A 22238D Also)	1	
22582E	Planet, A727/A518/A618 Forward (5 Gear, Steel) W/3rd Design Splines 1996-Up	1	4617998
22582F	Planet, 48RE Forward (6 Gear, Steel) 2003-08	1	52854033AA
22583E	Planet Kit, A518 Front & Rear 1996-Up (Contains: 582E, 592, 622A, 612, 584A, 594, Washers & Races)	1	
22583F	Planet Kit, 48RE Front & Rear 2003-Up (Contains: 582F, 592G, 622G, 612G, 584D, 594G, With Washers & Races) (Will Retro Fit A518/A618 As A Set)	1	
22584	Planet, A727/A518 Rear (3 Gear) 1965-02	1	2466539
22584A	Planet, A727/A518/A618 Rear (4 Gear) 1965-02 (Can Fit 48RE If (2) 22238A Are Used)	1	2801061

© Whatever It Takes Transmission Parts. Inc.

PART #	HARD PARTS (Continued)	QTY	REFERENCE #
22584AS	Planet, A727/A518/A618 Rear (4 Gear, Straight Teeth) 1965-02 (Can Fit 48RE If (2) 22238A Are Used)	1	
22584C	Planet, A727/A518/A618 Rear (6 Gear) 1965-02 (Use To Replace The 3 or 4 Gear Rear Planet)(Aluminum Housing)(Can Fit 48RE If (2) 22238E Are Used)	1	
22584D	Planet, 48RE Rear (6 Gear) 2003-08	1	52854140AA
22584DK	Planet Assembly, A618(48RE) Rear (6 Gear)(With Ring Gear) 2003-Up	1	
12590A	Ring Gear, A518 Overdrive Planet (Angled Teeth) 1989-94 (Has No I.D. Groove Between Park Lugs & Drum Lugs)	1	4461012
12590AA	Ring Gear, A518/A618/48RE Overdrive Planet (Straight Teeth)	1	4461130
12590AB	Ring Gear, A518/A618/48RE Overdrive (W/15 Degree Angled Teeth) Has 1 I.D. Groove Between Park Lugs & Drum Lugs	1	4761010
22592	Ring Gear, A727/A518/A618/48RE Front Planet (Uses 62 Teeth Forward Friction) 1965-Up	1	2892656
22592G	Ring Gear, 48RE Front Planet (Uses 93 Teeth Forward Friction) 2003-Up	1	52854043AA
22594	Ring Gear, A727/A518/A618/48RE Rear Planet (Annulus) 1965-Up	1	4810002AB
22594G	Ring Gear, 48RE Rear Planet (Annulus) 2003-Up	1	52854074AA
12610A	Sun Gear, A518 Overdrive (22 Degree Angled Teeth) 1989-94	1	4461022
12610AA	Sun Gear, A518/A618/48RE Overdrive (Straight Teeth)	1	4461127
12610AB	Sun Gear, A518 Overdrive (15 Degree Angled Teeth) 1995-Up	1	4778742
22612	Sun Gear, A727/A518/A618/48RE Forward & Rear Planet (Fits The Thin Shell) No Groove 1965-02	1	2801311
22612G	Sun Gear, 48RE Forward & Rear Planet (Fits The Thick Shell) 1 Groove 2003-Up	1	52854048AA
22622	Shell, A727/A518/A618 Driving (W/3 Holes For Washer) 1962-95 (.175" Thick At Lugs)	1	4617978
22622A	Shell, A518/A618 Driving (W/3 Holes For Washer)(.175" Thick At The Lugs) 1996-02	1	
22622G	Shell, 48RE Driving (W/6 Holes For Washer) 2003-08 (.240" Thick At The Lugs)	1	52854056AA
22622GK	Shell W/Sun Gear, 48RE Driving (With 6 Holes For Washer)(.240" Thick At The Lugs) 2003-08 (Comes With Sun Gear # 612)	1	
22622GAK	Shell Asembly, 48RE Driving (With 6 Holes For Washer)(.240" Thick At The Lugs) 2003-08 (Contains: # 622, 243 & Two 884)	1	
22634	Support, A727 Output Shaft (4 Bolt) 1962-89	1	2466882
22634A	Support, A727 Output Shaft (6 Bolt) 1989-94	1	52118245
22634B	Support, A518 Piston Retainer (Uses A 2 Tab Washer #254) W/Governor Feed Holes 1989-Up Comes W/2 Plugs To Retro Fit 1996-Up	1	52118180
22634-6BK	Plug/O-Ring Kit, A500/A518/A618/48RE (Fits 12634B & 22634B)(Contains: 2 Plugs & O-Ring) (Plugs Fits 12634B & 22634B)(O-Ring Only Fits 22634B)	1	
S22634B-OS	Support, A518 Piston Retainer (Uses A 2 Tab Washer #254) (Oversized) Reverse Drum Must Be Bored (Sonnax)	1	
22634BA	Support, A518 Piston Retainer (Uses A 1 Tab Washer #254) W/Governor Feed Holes 1989-90	1	
22634C	Support, A518/A618/48RE Piston Retainer (Uses A 2 Tab Washer #254) No Tubes (No Governor Feed Holes) 1996-02 (Can Use 22634B)	1	52117975

PART #	SPRAGS & ONE WAY CLUTCHES	QTY	REFERENCE #
12650	Sprag, A518/A618/48RE Overrun Clutch (Overdrive) 1990-Up	1	4461015
22654	Sprag, A727/A518 Rear Spring & Roller Kit (12 Rollers)	1	
22654A	Sprag, A727/A518/A618/48RE Rear (14 Rollers With Plastic Cage) 1991-Up	1	4617199
12660	Inner Race, A518/A618/48RE Overdrive Sprag 1990-Up	1	4461124
22664	Inner Race, A727/A518 Rear Sprag (12 Roller Type)	1	3420100
22664A	Inner Race, A727/A518/A618/48RE Rear Sprag (14 Roller Type) Sonnax	1	22750L
22665	Outer Race, A727/A518 Rear Sprag (12 Rollers Type) 1962-64	1	
22665A	Outer Race, A727/A518/A618/48RE Rear Sprag (14 Roller Type) 1991-Up	1	4471473
22665AK	Outer Race Kit, A518/A618/48RE Rear Sprag (14 Roller)(6 Bolt) Must Have T-9250 Tool To Install This	1	
22665K	Outer Race Kit, A727 Rear Sprag	1	
T-9250	Tool to Install 22665AK (Drill Guide Plate)	1	

PART #	HARD PARTS (Continued)	QTY	REFERENCE #
22670-1	Input Clutch, A727 (19 Spline) 1962-66	1	
22670	Input Shaft, A727 Non Lock-Up (24 Spline) 1967-77	1	
22670A	Input Shaft, A727 Non Lock-Up (24 Spline) 1978-89	1	
22670AA	Input Shaft, A727/A518 Non Lock-Up (No Bushing Type) 1990-Up (1 1/8" OD On Land Where Stator Bushing Rides)	1	
22670AB	Input Shaft, A727/A518/A618/48RE Non Lock-Up (No Bushing Type) 1992-Up (1 1/4"OD On Land Where Stator Bushing Rides)	1	
22670B	Input Shaft, A727 Lock-Up (23 Spline) W/Bushing 1978-89	1	
22670BA	Input Shaft, A727/A518 Lock-Up (No Bushing Type) 1990-Up (1 1/8"OD On Land Where Stator Bushing Rides)	1	

© Whatever It Takes Transmission Parts. Inc.

22670BB	Input Shaft, A727/A518/A618/48RE Lock-Up (No Bushing Type) 1992-Up (1 1/4"OD On Land Where Stator Bushing Rides)	1	4617396
S22670BBK	Input Shaft, A727/A518/A618/48RE Lock-Up (No Bushing Type) 1992-Up (1/4"OD On Land Where Stator Bushing Rides)(This Comes With The Direct Clutch Hub #575 Made Onto The Shaft, 1 Piece, Direct Clutch Piston With Anti-Rotation Tabs And Steel Clutch Plate 0.068" With Missing Lugs)(Sonnax)	1	
22670BBHPK	Input Shaft & Hub, A727/A518/A618/48RE Lock-Up (No Bushing Type)(2 Piece Design) (High Performance)	1	
22674	Shaft, A518/A618/48RE Intermediate 1990-93 (2nd Design Splines) Has Only 1 Small Hole Between The 2 Overdrive Sun Gear Bushings (Use 22674A)	1	4471504
22674A	Shaft, A518/A618/48RE Intermediate 1994-95 (2nd Design Splines) Has 2 Small Hole Between The 2 Overdrive Sun Gear Bushings	1	
22674B	Shaft, A518/A618/48RE Intermediate 1996-Up (3rd Design Splines)	1	4617611
S22674B-HD	Shaft, A518/A618/48RE Intermediate 1996-Up (3rd Design Splines)(Sonnax)(Extreme Duty)	1	
22678	Output Shaft, A727 2WD (27" Long) 1966-75	1	
22678A	Output Shaft, A727 2WD (27" Long) (.618" Pilot) 1976-89	1	
22678AA	Output Shaft, A727 2WD (27" Long) (.345" Pilot) 1990-94	1	
22678AB	Output Shaft, A727 2WD (27" Long) (.618" Pilot) 1976-89 (Bolt On Yoke)	1	
22678B	Output Shaft, A727 2WD (21" Long) 1966-75	1	
22678BA	Output Shaft, A727 2WD (21" Long) (.618" Pilot) 1976-89	1	
22678C	Output Shaft, A727 4x4 (17" Long) International	1	
22678D	Output Shaft, A727 2WD (16 3/4" Long) (.618" Pilot) Bolt On Yoke 1976-89	1	
22678DA	Output Shaft, A727 2WD (16 3/4" Long) (.345" Pilot) Bolt On Yoke 1990-94	1	
22678DB	Output Shaft, A727 2WD (17" Long) (.345" Pilot) Bolt On Yoke 1990-94	1	
22678E	Output Shaft, A727 4x4 (13 1/2" Long) (Jeep) (2 3/4" To Snap Ring Groove From End Of Shaft)	1	
12678E	Output Shaft, A518/A618/48RE 2WD (1 1/16" Long Key Way Slot)	1	
12678EA	Output Shaft, A518/A618/48RE 2WD (1 7/16" Long Key Way Slot)	1	
12678EB	Output Shaft, A518/A618/48RE 2WD (13 Teeth Speed-O Gear) No Key Way	1	
12678EC	Output Shaft, A518/A618/48RE 2WD (No Speed-O Gear) No Key Way	1	
22678F	Output Shaft, A727 4x4 (13 1/4" Long) (Jeep) (3" To Snap Ring Groove From End Of Shaft)	1	
12678F	Output Shaft, A518/A618/48RE 4x4 (9 1/4" Long) (1 1/16" Long Key Way Slot)	1	
12678FA	Output Shaft, A518/A618/48RE 4x4 (9 1/4" Long) (1 7/16" Long Key Way Slot)	1	
22678G	Output Shaft, A727 4x4 (16 1/4" Long) (3 5/8" To Snap Ring Groove From End Of Shaft)	1	
12678G	Output Shaft, A518/A618/48RE 4x4 (5 1/4" Long) (1 1/8" Long Slpines) (W/Pilot On Rear Of Shaft)	1	
12678GA	Output Shaft, A518/A618/48RE 4x4 (5 1/4" Long) (1 7/8" Long Splines)	1	
12678GAHP	Output Shaft, A518/A618/48RE 4x4 (5 1/4" Long) (1 7/8" Long Splines)(29 Splines) (TCS Heavy Duty)	1	
22678H	Output Shaft, A727 4x4 (16 1/4" Long) (3 1/4" To Snap Ring Groove From End Of Shaft)	1	
S22678HDK	Output Shaft Kit, 48RE (Heavy Duty) 2003-06 4x4 With NV271 Or NV273 Transfer Cases (Includes Output Shaft W/Bushings & Transfer Case Input Gear)(Sonnax)	1	
22678J	Output Shaft, A727 4x4 (17 1/2" Long) (4 3/4" To Snap Ring Groove From End Of Shaft)	1	
22678JA	Output Shaft, A727 4x4 (17 1/2" Long) 1974-79	1	
S22678PAK	Pin/Plug Kit, A727/A518/A618/48RE Pilot Pin (Goes Into The Output Shaft On A727 Or Intermediate Shaft On A518/A618/48RE W/Orifice Cup Plug For Rear Of Shaft) 1990-Up (Sonnax)	1	
22680	Governor, A727 (Large Valve Is 1.002"OD)	1	
22680A	Governor, A727 (Large Valve Is 1.070"OD)	1	
12680B	Governor, A518 (Large Valve Is Steel, 1.070"OD)(W/Keyway SLot In Aluminum Body) 1989-95	1	
12680C	Governor, A518 (Large Valve Is Brass, 1.070"OD)(W/Keyway Slot In Aluminum Body) 1989-95	1	
12681A-1	Valve, A518 Governor (Small, Steel) Superior	1	
S12681A-1	Valve, A518 Governor (Small, Aluminum) (Sonnax)	1	
12681A-5	E-Clip, A727/A518 Holds Valves In Governor	1	
12681B-2K	Repair Kit, A518 Governor (With Weights & Springs)	1	
22681B-2K	Repair Kit, A618/48RE Governor (Diesel)	1	
12685	Support, A518 Governor (3 Ring)	1	4461009
12685A	Support, A518 Governor (2 Ring)	1	
22685	Support, A727 Governor	1	
12688	Bracket, A727/A518 Governor Bolt	1	
12697	Retainer, A518/A618/48RE Governor Support	1	4461002
22740	Valve Body, A727 Non Lock-Up 1972-94	1	
22740-5	Valve Body, A727 Non Lock-Up 1967-71	1	
22740A	Valve Body, A727 Lock-Up 1978-Up	1	
22740AA	Valve Body, A727 Non Lock-Up (Diesel) 1978-94	1	
22740AB	Valve Body, A727 Lock-Up (Diesel) 1978-94	1	
22740B	Valve Body, A518/A618 Non Lock-Up (W/1 Solenoid)	1	
22740BC	Valve Body, A518/A618 Non Lock-Up (W/1 Solenoid & Boost Valve Tube)	1	
22740C	Valve Body, A518/A618 Lock-Up (W/2 Solenoids & Boost Valve Tube)	1	

© Whatever It Takes Transmission Parts. Inc.

PART #	HARD PARTS (Continued)	QTY	REFERENCE #
22740CA	Valve Body, A518/A618 Lock-Up (W/2 Solenoids & No Boost Valve Tube)	1	
22740EC	Valve Body, A518/A618 (3 Solenoids & 1 Round Sensor) 4 Prong Governor Solenoid 1996-99 (Contains: S12741A-1, S12741M-1, S12741P-1, 12432A, & 12325C Already Installed)(Customer Must Use Their Own Park Rod Actuator)	1	
22740ED	Valve Body, A518/A618 (3 Solenoids & 1 Square Sensor) 4 Blade Governor Solenoid 2000-Up (Uses A 3 Prong Screw-In Neutral Safety Switch)(Contains: S12741A-1, S12741M-1, S12741P-1, D12432A, 12325C Already Installed)(Customer Must Use Their Own Park Rod Actuator)	1	
22740G	Valve Body, A618 (47RE) (With 3 Solenoid & 1 Square Sensor) 4 Blade Governor Solenoid (Gas/Diesel) 2001-Up (Uses A Push-In Neutral Safety Switch) (Contains: S12741A-1, S12741M-1, S12741P-1, 12432A, 12325C Already Installed)	1	
22740GA	Valve Body, 48RE (With 3 Solenoid & 1 Square Sensor)(4 Blade Governor Solenoid) (Diesel) 2003-Up (Uses A Push In Neutral Safety Switch)(Fully Tested)(Contains: S12741A-1, S12741M-1, S12741P-1, 12432A, 12325C Already Installed)(Must Have #27 Stamped In The Main Seperator Plate)	1	

CHRYSLER

PART #	VALVE BODY COMPONENTS	QTY	REFERENCE #
S12741-4	Bracket, A518/A618/48RE Holds Transducer (# 415 Sensor) To Valve Body (4th Design) (Metal, 3 Bolt Holes) 2000-Up	1	
S12741-7	Neutral Safety Back-Up Insulator, A727/A518 (This Replaces The Plastic Piece On The Manual Shaft Lever (Rooster Comb)(For The Screw-In Type Neutral Safety Switch)(Sonnax)	1	
12741A-1	Switch Valve, A518/A618/48RE Prevents Lock-Up Shudder	1	
12741A-5	Check Ball, A727/A518/A618/48RE (11/32") (Torlon)	1	
S12741A-7	Neutral Safety Back Up Insulator, A518/A618/48RE Replaces The Plastic Piece On The Manual Shaft Lever (Rooster Comb)(For The Push-In Type Neutral Safety Switch) 6/2002-Up (Sonnax)	1	
S12741AOS-1	Switch Valve, A518/A618/48RE (Oversize) (Sonnax) Must Use Reamer T-22771A-TL13	1	
T-22771A-TL13	Reamer Set, For S12741AOS-1 (Sonnax)	1	
S12741C-4	Retainers, A518/A618/48RE TCC Boost Valve Spring (Sonnax) (5 Pieces)	1	
12741CA-4	Plate, A518/A618/48RE TCC Boost Valve (Superior) With Retainer To Hold Spring In	1	
12741CK	Spring Kit, A727 Lock-Up Delay (Spring & Plate)	1	
S12741CAK	Valve Kit, A518/A618/48RE TCC Boost (Oversized)(Contains: Lockup Boost Valve (OS), Plug Valve (OS), Spring & Spring Retainer)(Requires T-F-22771-TL19 & T-VB-Fix)	1	
T-F-22771-TL19	Tool Kit For S12741CAK (Contains: Reamer, Reamer Jig & Guide Pin)(Requires T-VB-Fix)	1	
S12741D-6K	Plug Kit, A727/A518/A618/48RE Valve Body Governor Bore (Contains: One 1-2 Govenor Plug, One 2-3 Govenor Plug & Three Teflon Seals)(Sonnax)	1	
S22741GNK	Sure Cure Kit, 48RE (Sonnax)	1	
S12741M-1	Manual Valve, A727/A518/618/48RE (Allows Converter Charge In Park)(Sonnax)	1	
A12741N-1K	Throttle Valve & Spring Kit, A518/A618/48RE (Restores TV Function)(Fixes 3 Transmissions)	1	
S12741NHPK	Throttle Vlave Kit, A727/A518/A618/48RE (High Performance) (Sonnax)	1	
S12741NK	Throttle Valve Kit, A727/A518/A618/48RE (Valve, Plunger, Springs & Sleeve) Sonnax	1	
S22741NK	Sleeve & Plug, A727/A518/A618/48RE Line Pressure (.200"OD Plug)(Sonnax)	1	
S22741NAK	Sleeve & Plug Kit, A727/A518/A618/48RE Line Pressure (.264"OD Plug) (Sonnax)	1	
S22741NCAK	Zip Kit, 46RE/46RH/47RE/47RH (Sonnax)	1	
S22741NCOK	Sure Cure Kit, 46RE/46RH/47RE/47RH (Oversized)(Sonnax)(Must Use T-VB-FIX, T-F-22771A-TL7, T-22771A-TL13, T-22771-TL12 & T-F-22771-TL)	1	
T-22771-TL12	Tool Kit For S22741NCOK	1	
T-F-22771-TL	Tool Kit For S22741NCOK (Contains Reamer, Reamer Jig & Guide Pin)	1	
S12741NOK	Throttle Valve Kit, A727/A518/A618/48RE (Oversize) (Valve, Plunger, Springs & Sleeve) Sonnax (T-F-22771-TL Reamer & T-VB-Fix Required)	1	
S12741P-1	Valve, A727/A518/A618/48RE Lube Pressure Regulated Valve (Reduces Converter Drain Back)(Sonnax)	1	
S12741PA-1	Valve, A727 Lube Pressure Regulated Valve 1962-77 (Sonnax)	1	
S22741PK	Kit, 48RE Line Pressure Plug & Sleeve Kit (Contains Valve, Sleeve, & 2 O-Rings)(Sonnax)	1	
S12740POS-1	Valve, A727/A518 Lube Pressure Regulated Valve (Sonnax)(Oversize)(Must Use Tool # T-F-22771A-TL7 & T-VB-Fix)(Contains: Oversize Valve, Oversize Plug & Spring)	1	
T-F-22771A-TL7	Tool Kit For RWD Chrysler 1978-Up Pressure Regulator Valve Kit	1	
S22741POSK	Kit, 48RE Lube Regulated Pressure Regulator Valve & Line/TV Pressure Plug (Oversize) (Requires T-F-22771A-TL7 & T-VB-FIX)	1	
T-F-22771A-TL7	Tool Kit For RWD Chrysler, 1978-Up Pressure Regulator Valve Kit	1	
22741RK	Kit, 46RE/47RE/48RE Boost Valve (This Is The Main Fix For Reverse Band Burn Up)(Contains Valve, Spring & Plug)	1	

PART #	HARD PARTS (Continued)	QTY	REFERENCE #
22747EA	Plate, A518/A618/48RE Valve Body (W/Out Boost Tube) 1988-97	1	
22747EB	Plate, A518/A618/48RE Valve Body (For Lock-Up Boost Tube Type) 1993-03	1	
22747G	Plate, A618(48RE) Valve Body (Diesel & V-10) 2003-06 (Transgo)	1	

© Whatever It Takes Transmission Parts. Inc.

22936.....Spring, A518/A618/48RE 3-4 Accumulator (.122"OD Wire)(2.350" Long) .....1 .....
22760.....Case, A727 (225) (6 Cylinder) (Push Button) 1962-65 .....1 .....
22760A .....Case, A727 (273/318) (Push Button) 1962-65 .....1 .....
22760AA.....Case, A727 (383/413/426/440) (Push Button) 1962-65 .....1 .....
22760AB.....Case, A727 (383/440) 1966-71 .....1 .....
22760AD.....Case, A727 (383/440) 1972-77 .....1 .....
22760AF .....Case, A727 (225) (6 Cylinder) 1966-71 .....1 .....
22760AG .....Case, A727 (225) (6 Cylinder) Non Lock-Up 1972-77 .....1 .....
22760AH.....Case, A727 (225) (6 Cylinder) Lock-Up (4 Bolt Support) 1978-Up .....1 .....
22760B .....Case, A727 (318/360) 1966-71 .....1 .....
22760C .....Case, A727 (318/360) 1972-77 (Will Retro Fit Back To 1966) (Can Use 22760E) .....1 .....
22760D .....Case, A727 (318/360) Non Lock-Up 1978-88 (Can Use 22760E) .....1 .....
22760E .....Case, A727 (318/360) Lock-Up 1978-88.....1 .....
22760F .....Case, A727 (318/360) L/Up (6 Bolt Support) 1989-Up.....1 .....
22760FA .....Case, A727 (318/360) Lock-Up (6 Bolt Support) W/Cut Out Bell.....1 .....
22760G.....Case, A727 (318/360) (Van) W/Timming Hole In Bell .....1 .....
22760H.....Case, A727 (400/440) Non Lock-Up 1978-88 .....1 .....
22760HA.....Case, A727 (400/440) (Van) W/Timming Hole In Bell .....1 .....
22760J.....Case, A727 (400/440) Lock-Up 1978-88.....1 .....
22760K .....Case, A727 International Truck .....1 .....
22760L.....Case, A727 AMC Non Lock-Up.....1 .....
22760M.....Case, A727 AMC Lock-Up .....1 .....
22760N .....Case, A727 Diesel(Cummins)(6 Bolt Support) 1989-94.....1 .....
22760P .....Case, A727 Diesel(4 Cyl, Mitsubishi) 1989-94.....1 .....
22760Q.....Case, A518 (318/360) (12 Roller Type Sprag) .....1 .....
22760R .....Case, A518 (318/360) (14 Roller Sprag) (2.812"OD Rear Servo) .900"OD Case
.....Connector (Driver Side Starter) 16 Round Holes To Bell .....1 .....
22760RA.....Case, A518 (318/360) (14 Roller Sprag) Screw In Neutral Safety Switch (1.080"OD Case
.....Connector) (Driver Side Starter) 16 Round Holes In Bell.....1 .....
22760RAA .....Case, A518 (318/360) (14 Roller Sprag) Push In Neutral Safety Switch (1.080"OD Case
.....Connector (Driver Side Starter) 16 Round Holes In Bell.....1 .....
22760RB.....Case, A518 (318/360) (14 Roller Sprag) (2.812"OD Rear Servo) .900"OD Case
.....Connector (Driver Side Starter) 17 Round Holes In Bell (W/Cut Out For Dust Cover)
..... Dakota/Durango .....1 .....
22760RC .....Case, A518 (318/360) (14 Roller Sprag) Screw-In Neutral Safety Switch (1.080"OD
.....Case Connector (Driver Side Starter) 17 Round Holes In Bell (W/Cut Out For Dust Cover)
..... Dakota / Durango .....1 .....
22760RD .....Case, A518 (318/360) (14 Roller Sprag) Push-In Neutral Safety Switch (1.080"OD
.....Case Connector (Driver Side Starter) 17 Round Holes In Bell (W/Cut Out For Dust Cover)
.....Dakota / Durango .....1 .....
22760S .....Case, A518 Diesel (14 Roller Sprag) (2.812"OD Rear Servo) .900"OD Case Connector
.....1991-94 .....1 .....
22760SA.....Case, A618 Diesel (14 Roller Sprag)(2.479"OD Rear Servo) .900"OD Case Connector
.....1991-94 .....1 .....
22760SB.....Case, A618 Diesel (14 Roller Sprag) (2.812"OD Rear Servo)(1.080"OD Case Connector)
.....1995-02 .....1 .....
22760SC.....Case, A618 Diesel (14 Roller Sprag)(2.479"OD Rear Servo)(1.080"OD Case Connector)
.....(No Threaded Boss On Bell For Shift Cable Bracket)(Can Use 22760SD) 1995-02 .....1 .....
22760SD.....Case, 48RE (V-10 & Diesel (14 Roller Sprag) (2.479"OD Rear Servo) 1.080"OD Case
.....Connector (1 Threaded Boss On Bell For Shift Cable Bracket) 1995-02.....1 .....
22760SG .....Case, 48RE Diesel (14 Roller Sprag) 2.479"OD Rear Servo (1.080"OD Case Connector)
.....With 1 Threaded Boss On Bell For Shift Cable Bracket (Push-in Neutral Safety Switch) 2003-04
.....(Also Fits V-10 2003-Up).....1 .....52118758AB
22760SH.....Case, 48RE Diesel (14 Roller Sprag) 2.479"OD Rear Servo (1.080"OD Case Connector)
.....No Threaded Boss On Bell For Shift Cable Bracket (Push-In Neutral Safety Switch) 2003-Up
.....(Can Use 22760SG) (Also Fits V-10 2003-Up) .....1 .....
22760SJ .....Case, 48RE Diesel (With 2 Bosses On The Side Of The Case For The Throttle Actuator
.....Motor) 2005-Up .....1 .....
22760SJ-1 .....Bracket, 48RE Throttle Actuator Motor To Case (For Converting A 22760SD To A
.....22760SJ Case) .....1 .....
22760T .....Case, A518 (318/360) (14 Roller Sprag) (2.812"OD Rear Servo) .900"OD Case Connector
.....(Passenger Side Starter) 1991-94 .....1 .....
22760TA .....Case, A518 (318/360) (14 Roller Sprag) (2.812"OD Rear Servo) 1.080"OD Case Connector
.....(Passenger Side Starter) 1995-02 .....1 .....
22760Q.....Case, A518 (318/360) (12 Roller Sprag) 1990-91.....1 .....

© Whatever It Takes Transmission Parts. Inc.

PART #	CASE COMPONENTS	QTY	REFERENCE #
22761-2C	Sleeve, A727/A518 Shift Lonkage Shaft (Use With T-56361-TL)	1	
T-56361-TL	Tool Kit, For 22761-2C	1	
22761MB	Bracket, A518/A618/48RE (Holds Push-In Neutral Safety Switch To Case) Screws Into Case With 2 Hole Bracket & Washers (For 12410C Switch) 6/2002-Up	1	
22761S	Sleeve, A518/A618/48RE Presses Into Case Connector Hole On Late Model Cases W/1.080"OD Hole To Convert The Case Into An Early Model Case W/.900"OD Hole	1	
S22761S-2K	Sleeve Adapter Kit, A518/A618/48RE Neutral Safety Switch (Sleeve With O-Ring & Washer Makes 2001-Up Case Fit Early Type Cases With The 3 Prong Neutral Safety Switch) Sonnax	1	

PART #	HARD PARTS (Continued)	QTY	REFERENCE #
22765	Pan, A727 Shallow 1962-Up	1	
22765A	Pan, A518/A618/48RE Deep (Flat Bottom) 1990-94 (Uses Dacron Filter)	1	4428462
22765B	Pan, A518/A618/48RE Deep (Ribbed W/Dip For Filter) 1995-Up (Uses Dacron Filter)	1	
22765C	Pan, A518/A618/48RE Deep (Ribbed W/Flat Bottom)(3.135" Deep) 1998-Up (Uses A 1/2 Metal And 1/2 Plastic Filter)	1	52118780AD
22770	Extension Housing, A727 2WD (18 1/2") W/Out Weight Bracket Holes (Snap Ring Retainer On Bottom Of Housing) 1966-Up	1	
22770A	Extension Housing, A727 2WD (18 1/2") With Weight Bracket Holes 1966-Up	1	
22770AA	Extension Housing, A727 2WD (18 1/2") W/Out Weight Bracket Holes (Snap Ring Retainer On Side Of Housing)	1	
22770AB	Extension Housing, A727 2WD (Push Button) Bolt On Flange 1962-64	1	
22770AC	Extension Housing, A727 2WD (Push Button) Slip On Yoke 1965	1	
12770B	Extension Housing, A518 2WD (Speed-O Gear Type) Holds 3 Overdrive Clutches	1	
12770BK	Overdrive Assembly, A518 2WD Governor Type (W/Speed-O) No Sensor (4 Gear Planet)	1	
22770B	Extension Housing, A727 2WD (8" Long) Bolt On Yoke Type (2 1/2"OD Rear Seal)	1	
22770BA	Extension Housing, A727 2WD (8 1/4" Long) Bolt On Yoke Type (2 3/4"OD Rear Seal)	1	
12770C	Extension Housing, A518/A618/48RE 4x4 (15 7/8" Long) (No Speed-O) No Sensor (Uses A Rear Seal) (Uses A 2 Bolt Mount) (Can Use 12770CB Or 12770CC)(With .637" Wide Park Pawl)	1	
12770CK	Overdrive Assembly, A518/A618/48RE 4x4 (15 7/8" Long) Governor Type (No Speed-O) No Sensor (Uses A Rear Seal) (Uses A 2 Bolt Mount) (Can Use 12770CBK Or 12770CCK)	1	
22770C	Extension Housing, A727 4x4 (10 1/4" Long) Cast Iron	1	
12770CA	Extension Housing, A518/A618/48RE 4x4 (15 7/8" Long)(No Speed-O)(No Sensor)(No Rear Seal) (With .637" Wide Park Pawl)	1	
12770CB	Extension Housing, A518/A618/48RE 4x4 (15 7/8" Long) (No Speed-O) No Sensor (Uses A Rear Seal) (Uses A 3 Bolt Mount) (Can Use A 12770CC)(With .637" Wide Park Pawl)	1	
12770CBK	Overdrive Assembly, A518/A618/48RE 4x4 (15 7/8" Long) Governor Type (No Speed-O) No Sensor (Uses A Rear Seal) (Uses A 3 Bolt Mount) (Can Use 12770CCK)	1	
12770CC	Extension Housing, A518/A618/48RE 4x4 (15 7/8" Long) (No Speed-O) No Sensor (Uses A Rear Seal) (Uses A 5 Bolt Mount) (With .637" Wide Park Pawl)	1	
12770CCK	Overdrive Assembly, A518/A618/48RE 4x4 (15 7/8" Long) Governor Type (No Speed-O) No Sensor (Uses A Rear Seal) (Uses A 5 Bolt Mount)	1	
22770D	Extension Housing, A727 4x4 (8 1/2" Long) Cast Iron	1	
12770D	Extension Housing, A518/A618/48RE 2WD (No Governor) (With Speed-O) W/Sensor (Does Not Fit 48RE 2003-Up)	1	
12770DK	Overdrive Assembly, A518/A618/48RE 2WD (No Governor) (W/Speed-O) W/Sensor (4 Gear Planet)(Does Not Fit 48RE 2003-Up)	1	
12770DA	Extension Housing, A518/A618/48RE 2WD (No Governor) (No Speed-O) W/Sensor (Does Not Fit 48RE 2003-Up)	1	
22770DA	Extension Housing, 48RE 2WD (No Speed-O) (With Sensor) 2003-Up (Uses A 2.985"OD Rear Seal) (With .637" Wide Park Pawl)	1	
22770DAK	Overdrive Assembly, 48RE 2WD (No Speed-O)(With Sensor) 2003-Up (Uses A 2.985"OD Rear Seal)(With .637" Wide Park Pawl)	1	
12770DAK	Overdrive Assembly, A518/A618/48RE 2WD (No Governor) (No Speed-O) W/Sensor (4 Gear Planet)(Does Not Fit 48RE 2003-Up)	1	
22770DB	Extension Housing, 48RE 2WD (No Speed-O)(With Sensor) 2003-Up (With .810" Wide Park Pawl)	1	
22770DBK	Overdrive Assembly, 48RE 2WD (No Speed-O)(With Sensor) 2003-Up (With .810" Wide Park Pawl)	1	
22770DC	Extension Housing, 48RE 4x4 (10 7/8" Long)(No Governor)(With Sensor) 2003-Up (With 2 Mounting Bosses On Drivers Side)(With .810" Wide Park Pawl)	1	
12770E	Extension Housing, A518/A618/48RE 4x4 (10 7/8" Long) (No Speed-O) W/Sensor (With .637" Wide Park Pawl)(Can Use 12770EB)	1	
12770EK	Overdrive Assembly, A518/A618/48RE 4x4 (10 7/8" Long) No Governor (No Speed-O) W/Sensor (Output Shaft Splined To The End)(No Side Mount)(With .637" Wide Park PawL)(Can Use U12770EBK)	1	
12770EAK	Overdrive Assembly, A518/A618/48RE 4x4 (10 7/8" Long) No Governor (No Speed-O) W/Sensor (W/ 1/2" Pilot On End Of Shaft) W/Side Mount (With .637" Wide Park Pawl)	1	

© Whatever It Takes Transmission Parts. Inc.

12770EB	Extension Housing, A518/A618/48RE 4x4 (10 7/8” Long) No Governor (With Sensor)(Holds 4 Or 6 Overdrive Clutch) W/2 Mounting Bosses On Driver Side (With .637” Wide Park Pawl) (For Wide Park Pawl Use 22770DC)	1	
12770EBK	Overdrive Assembly, A518/A618/48RE 4x4 (10 7/8” Long) No Governor (With Sensor)(Holds 4 Or 6 Overdrive Clutch) W/2 Mounting Bosses On Driver Side (With .637” Wide Park Pawl)	1	
12770EC	Extension Housing, A518/A618/48RE 4x4 (10 7/8” Long) No Governor (With Sensor)(Holds 4 Or 6 Overdrive Clutch) W/3 Mounting Bosses On Drivers Side & W/1 Mounting Boss On Passengers Side (With .637” Wide Park Pawl)	1	
12770ECK	Overdrive Assembly, A518/A618/48RE 4x4 (10 7/8” Long) No Governor (With Sensor Hole) (Holds 4 or 6 Overdrive Clutch) W/3 Mounting Bosses On Drivers Side & W/1 Mounting Boss On Passengers Side (With .637” Wide Park Pawl)	1	
22770E	Extension Housing, A727 4x4 (6 7/8” Long) Aluminum	1	
22770F	Extension Housing, A727 4x4 (6 5/8” Long) Aluminum	1	
22770G	Extension Housing, A727 4x4 (8 3/8” Long) Aluminum	1	
22770H	Extension Housing, A727 4x4 (10 1/4” Long) Aluminum Up To 1989	1	
22770HA	Extension Housing, A727 4x4 (10 1/4” Long) Aluminum (W/ 7/8” Bolts) 1990-Up	1	
12771	Cover, A727/A518/A618/48RE Output Shaft Snap Ring (With Bolts)	1	
12774	Speed-O Housing, A727/A518/A618/48RE (Aluminum) (Cable Type)	1	
12774-436	Sensor, A727/A518/A618/48RE Speed (Screws Onto The 12774)(With 2 Pin Oval Connector) (Takes Place Of A Cable)	1	
12774B	Speed-O Housing, A727/A518/A618/48RE (Plastic) With 3 Round Prong Connectors	1	
12774BA	Speed-O Housing, A727/A518/A618/48RE (Plastic) With 3 Flat Blade Connectors	1	
22775	Bolt, A727/A518/A618/48RE Flex Plate To Converter	4	
44775BA	Converter Bolt, 48RE (Diesel) Fine Thread (No Flange)	AR	
22777K	Bolt Set, A727/A518/A618/48RE Pump To Case	1	
22778K	Bolt Set, A727/A518/A618/48RE Stator To Pump Body	1	
22779K	Bolt Set, A727/A518/A618/48RE Pan To Case	1	
12781A	Bolt, A518/A618/48RE Extension Housing To Case	1	
12781AK	Bolt Set, A518/A618/48RE Extension Housing Top Case (7/16” Hex Head)	1	
22781K	Bolt Set, A727 Extension Housing To Case (9/16” Hex Head)	1	
22782K	Bolt Set, A727 Valve Body To Case (10 Pieces)	1	
22782AK	Bolt Set, A518/A618/48RE Valve Body To Case (10 Pieces)	1	
22787K	Bolt Set, A727/A518/A618/48RE Holds Governor To Support	1	
12789AK	Bolt Set, A727/A518 Output Shaft Bearing Cover To Extension Housing (Phillips Head) (2 Per Set)	1	
12789BK	Bolt Set, A727/A518/A618/48RE Output Shaft Bearing Cover To Extension Housing (Torx Head)(2 Per Set)	1	
22790K	Bolt Set, A727 Output Support To Case (4 Bolt)	1	
12790K	Bolt Set, A518/A618/48RE Overdrive Retainer (Or Rear Support) To Case (6 Pieces)	1	
22791K	Bolt Set, A727/A518/A618/48RE Filter To Valve Body	1	
22792K	Bolt Set, A727/A518/A618/48RE Snap Ring Cover To Extension Housing	1	
44839	Pan Magnet, Rectangle	1	
44839A	Pan Magnet, Round	1	3787240
12842	Bracket, A727 Speed-O Hold Down	1	
12844	Key, A518/A618/48RE Holds Governor Support To Shaft (Half Moon)	1	
12844A	Key, A518/A618/48RE Holds Governor Support To Shaft (Rectangle)	1	
12848	Gear, A727/A518/A618/48RE Driven Speed-O (24 Teeth) With 3” Long Steel Shaft	1	
12848C	Gear, A727/A518/A618/48RE Driven Speed-O (26 Teeth) With 3” Long Steel Shaft	1	
12848D	Gear, A727/A518/A618/48RE Driven Speed-O (27 Teeth) With 3” Long Steel Shaft	1	
12848F	Gear, A727/A518/A618/48RE Driven Speed-O (29 Teeth) With 3” Long Steel Shaft	1	
12848FA	Gear, A727/A518/A618/48RE Driven Speed-O (29 Teeth) With 1 1/2” Long Steel Shaft	1	
12848G	Gear, A727/A518/A618/48RE Driven Speed-O (30 Teeth) With 3” Long Steel Shaft	1	
12848H	Gear, A727/A518/A618/48RE Driven Speed-O (31 Teeth) With 3” Long Steel Shaft	1	
12848HA	Gear, A727/A518/A618/48RE Driven Speed-O (31 Teeth) With 1 1/2” Long Steel Shaft	1	
12848J	Gear, A727/A518/A618/48RE Driven Speed-O (32 Teeth) With 3” Long Steel Shaft	1	
12848JA	Gear, A727/A518/A618/48RE Driven Speed-O (32 Teeth) With 1 1/2” Long Steel Shaft	1	
12848K	Gear, A727/A518/A618/48RE Driven Speed-O (33 Teeth) With 3” Long Steel Shaft	1	
12848KA	Gear, A727/A518/A618/48RE Driven Speed-O (33 Teeth) With 1 1/2” Long Steel Shaft	1	
12848L	Gear, A727/A518/A618/48RE Driven Speed-O (34 Teeth) With 3” Long Steel Shaft	1	
12848LA	Gear, A727/A518/A618/48RE Driven Speed-O (34 Teeth) With 1 1/2” Long Steel Shaft	1	
12848M	Gear, A727/A518/A618/48RE Driven Speed-O (35 Teeth) With 3” Long Steel Shaft	1	
12848MA	Gear, A727/A518/A618/48RE Driven Speed-O (35 Teeth) With 1 1/2” Long Steel Shaft	1	
12848N	Gear, A727/A518/A618/48RE Driven Speed-O (36 Teeth) With 3” Long Steel Shaft	1	
12848NA	Gear, A727/A518/A618/48RE Driven Speed-O (36 Teeth) With 1 1/2” Long Steel Shaft	1	
12848P	Gear, A727/A518/A618/48RE Driven Speed-O (37 Teeth) With 3” Long Steel Shaft	1	
12848Q	Gear, A727/A518/A618/48RE Driven Speed-O (38 Teeth) With 3” Long Steel Shaft	1	
12848QA	Gear, A727/A518/A618/48RE Driven Speed-O (38 Teeth) With 1 1/2” Long Steel Shaft	1	
12848S	Gear, A727/A518/A618/48RE Driven Speed-O (40 Teeth) With 3” Long Steel Shaft	1	
12848ZJ	Gear, A727/A518/A618/48RE Driven Speed-O (56 Teeth) With 3 “ Long Steel Shaft	1	
12848ZK	Gear, A727/A518/A618/48RE Driven Speed-O (57 Teeth) With 3” Long Steel Shaft	1	

© Whatever It Takes Transmission Parts. Inc.

PART #	HARD PARTS (Continued)	QTY	REFERENCE #
22853	Cushion Spacer, A727/A518/A618/48RE Forward Clutch Spring Spacer	1	3515077
12860	Snap Ring, A518/A618/48RE Overdrive Clutch (.051" Thick)(6 3/8"OD)(Waved) 1988-Up	1	4461066
12861	Snap Ring, A518/A618/48RE Overdrive Clutch Front	1	4461082
12862	Snap Ring, A518/A618/48RE Overdrive Clutch (Flat)	1	4461065
12863	Snap Ring, A518/A618/48RE Overdrive Direct Drum To Ring Gear	2	4461060
12864	Snap Ring, A518/A618/48RE Overdrive Direct Clutch (Front) (.079" Thick)(5 13/16"OD)(Wavy) 1988-Up	1	4461032
12866	Snap Ring, A518/A618/48RE Overdrive Sun Gear (Round)	1	4461064
12867	Snap Ring, A518/A618/48RE Overdrive Sun Gear (Flat)	1	4461063
12868	Snap Ring, A518/A618/48RE Overdrive Ring Gear To Output Shaft	1	4461059
22877	Snap Ring, A727/A518 Forward Drum (Bottom, Wavy)	1	2466806
22878	Snap Ring, A727/A518/A618/48RE Forward & Direct Clutch (.062")	1	1942063
22878A	Snap Ring, A727/A518/A618/48RE Forward & Direct Clutch (.074")	1	1942064
22878B	Snap Ring, A727/A518/A618/48RE Forward & Direct Clutch (.088")	1	1942065
22878C	Snap Ring, A727/A518/A618/48RE Forward & Direct Clutch (.106")	1	2466811
22878F	Snap Ring, A727/A518/A618/48RE Forward & Direct Clutch (.052")(Waved)	1	3410570
22878K	Snap Ring Set, A727/A518/A618/48RE Forward And Direct Clutch (4 Per Set) Contains: 1 Each Of (.062")(.074")(.088")(.106")	1	
22879	Snap Ring, A727/A518/A618/48RE Holds Retainer To Direct Drum	1	2124824
22880	Snap Ring, A727/A518/A618/48RE Holds Input Shaft To Forward Hub	1	2124872
22884	Snap Ring, A727/A518/A618/48RE Holds Sun Gear To Shell	2	1736521
22889	Snap Ring, A727 Rear Bearing To Output Shaft (Front)	1	
22890	Snap Ring, A727/A518/A618/48RE Holds Reverse Drum To Output Shaft Support	1	6033591
12891	Snap Ring, A518/A618/48RE Holds Bearing #271 On Output Shaft	1	4461068
12892	Snap Ring, A518/A618/48RE Oil Distributor Rear	1	4461056
12893	Snap Ring, A518/A618/48RE Output Bearing To Output Shaft	1	4461069
22894	Snap Ring, A727/A518/A618/48RE Front Planet To Output Shaft	1	6024312
22895	Snap Ring, A727 Holds Rear Bearing To Output Shaft (Rear)	1	
22896	Snap Ring, A727/A518/A618/48RE Holds Front Servo In Case	1	1942130
22897	Snap Ring, A727 Holds Output Shaft Bearing To Extension Housing	1	
12897A	Snap Ring, A518/A618/48RE Holds Output Shaft Bearing To Extension Housing (W/2 Ears)	1	4461057
22898	Snap Ring, A727/A518 Holds Governor To Output Shaft	1	
22905	Servo Assembly, A727/A518/A618/48RE Kickdown (Large Pin Type) 1972-Up	1	
22905A	Servo Assembly, A727 Kickdown (Small Pin Type) 1962-71	1	
22905K	Servo Assembly, A727/A518/A618 /47RE/48RE Kickdown (Large Pin Type) 1972-Up	1	
22906A	Spring, A727/A518/A618/48RE Kickdown Servo (Outer) 1962-Up	1	4617573
22906B	Spring, A727/A518 Kickdown Servo (Inner) 1962-Up	1	3410444
22907	Piston, A727/A518/A618/48RE Kickdown Servo (Large Pin) 1972-Up	1	3410440
22907K	Piston Set, A727/A518/A618/48RE Kickdown Servo (Super Servo)(Superior)	1	
22907A	Piston, A727 Kickdown Servo (Small Pin Type) 1962-71	1	
22907-2SK	Super Servo Kit, A727/A518/A618/48RE Kickdown Servo 1962-Up (Superior)(Contains: Piston W/Pin, Sleeve, Power Strut & Power Wedge)	1	
22909	Retainer, A727/A518/A618/48RE Kickdown Servo Spring (Cover) (Large Pin Type) 1972-Up	1	3410441
A12909-5K	Spacer Kit, A727/A518/A618/48RE Front Servo (5 Per Kit)(Superior)	1	
22910	Servo Assembly, A727/A518 Reverse Servo (2.812"OD) 1966-Up	1	
22910A	Servo Assembly, A618/48RE Reverse Servo (Diesel) (2.479"OD)	1	
22911	Spring, A727/A518 Rear Servo Return	1	2801241
22912	Piston, A727/A518 Rear Servo (2.812"OD) 1966-Up (Superior) (Super Servo)	1	2801281
22912A	Piston, 48RE Rear Servo (2.479"OD) 1994-96	1	4531229
22912AK	Piston & Pin, A618/48RE Rear Servo (2.479"OD) 2000-Up (Superior) (Super Servo)	1	
S22912B	Piston, 48RE Rear Servo (2.479"OD) 1997-Up (Sonnax)	1	52118745
A12913AC	Servo Pin, A518/A618/48RE Reverse Servo (Steel Replacement)(Adapt A Case)	1	
S12913K	Pin/Plug, A727/A518/A618/48RE Reverse Servo (Sonnax) (Contains: Pin/Plug, O-Ring & Retaining Ring)	1	
22914	Retainer, A727/A518/A618/48RE Rear Servo Spring (2.856"OD) (Cupped)	1	
22914A	Retainer, A518/A618 Rear Servo Spring (2.510"OD) (Top Hat)	1	1942150
22914B	Retainer, A618/48RE Rear Servo Spring (2.525"OD) Flat (Diesel)	1	52118342
22916	Strut Assembly, A727/A518/A618/48RE Kickdown Band	1	
22916-1	Band Lever, A727 (TCS Pro-727) Heavy Duty 4.2 Ratio (CNC Machined From 4140 HTRS For Added Strength)(Provides Greater Mechanical Clamping Force Than The OEM 3.8 Ratio Band Lever)	1	
22916-2	Strut, A727/A518/A618/48RE Kickdown Band Apply (Heavy Duty) Superior	1	K031
S22916-2	Strut, A727/A518/A618/48RE Kickdown Band Apply (Hi-Performance)(Sonnax)	1	
22916-3	Strut, A727/A518/A618/48RE Kickdown Band Anchor (Pin Side)	1	3743338
22916-3HD	Strut, A727/A518/A618/48RE Kickdown Band Anchor (Pin Side)(The Power Wedge)(Adapt-A-Case)	1	
22917	Strut Assembly, A727/A518 Reverse Band (W/Solid Type Band) (6" Drum) (7 Pieces) (Lever # 176 or 139) 1962-E91	1	

© Whatever It Takes Transmission Parts. Inc.

22917A	Strut Assembly, A727/A618/48RE Reverse Band (W/Solid Type Band) (6 1/4” Drum) (7 Pieces) (Lever # 6AB) L1991-Up	1	
22917C	Strut Assembly, A618/48RE Reverse Band (Double Wrap Type Band) (6 1/4” Drum) (5 Pieces) (Lever # 412) 1996-Up	1	
S22917C-2	Band Strut, A518/A618/48RE Reverse Band (.100” Longer)(Sonnax)	1	
S22917D-2	Band Strut, A518/A618/48RE Reverse Band (.150” Longer)(Sonnax)	1	
22919	Adjusting Bolt, A727/A518/A618/48RE Front Band	1	6036115AA
22925	Accumulator Assembly, A727/A518/A618/48RE (Plastic Piston)	1	
22926	Spring, A727/A518/A618/48RE Accumulator Return (1.525” Tall)	1	3515079
32926	Spring, A727/A518/A618/48RE Accumulator Return (1.060” Tall)	1	
12927	Piston, A727/A518/A618/48RE Accumulator (Aluminum)	1	
12927HD	Piston, A727/A518/A618/48RE Accumulator (Aluminum With 4 Rings)	1	
22927	Piston, A727/A518/A618/48RE Accumulator (Plastic)	1	
22927-2K	Piston/Sleeve Kit, A727/A518/A618/48RE Accumulator (Contains: 1 Piston, 2 Seals, 2 Sleeves) No Matching Required (Sonnax)	1	
22936	Spring, A518/A618/48RE 3-4 Accumulator (.122”OD Wire) (2.350” Long)	1	
12936K	Spring, A518 3-4 Accumulator (.060”OD Wire) (2.750” Long)	1	
12960	Piston, A518/A618/48RE Overdrive Direct Clutch	1	4431695
22964	Piston, A727/A518/A618/48RE Forward Clutch (.780” Thick) 1966-Up	1	3743624AB
22964A	Piston, A727/A518/A618/48RE Forward Clutch (.840” Thick) 1966-Up	1	
22965	Piston, A727 Direct Clutch 1962-71	1	2464651AB
22965A	Piston, A727/A518/A618/48RE Direct Clutch (.285” Thick At The Edge) 1972-Up	1	
22965AA	Piston, A727/A518/A618/48RE Direct Clutch (.300” Thick At The Edge) 1972-Up	1	
12970	Spring, A518/A618/48RE Overdrive Clutch Return	1	4461027
22974A	Spring, A727 Forward Clutch Disc Spring 1964-73 (Also Fits 1998-Up)	1	1942015
22974B	Spring, A727 Forward Clutch Disc Spring 1974-Up	1	3743621AB
22975	Spring Set, A727/A518/A618/48RE Direct Clutch Return	1	4617205
22975A	Spring Set, A727/A518/A618/48RE Direct Clutch Return (Diesel Only)(1.400”Long)	1	
22985	Retainer, A727/A518/A618/48RE Direct Clutch Return	1	2801949
22989	Retainer, A727/A518 Rear Sprag	1	2801426
22989A	Retainer, A727/A518/A618/48RE Rear Sprag	1	
S12991-2K	Detent Ball & Spring Kit, A727/A518/A618/48RE Valve Body Rooster Comb (Contains: Sleeve & Detent Ball)(Must Use Tool T-22771-TL12)	1	
T-22771-TL12	Tool For S12991-2K	1	
12991A-3	Rooster Comb, A727 (Has No Plastic Insulator For Neutral Safety Switch) 1965-E70	1	
12991B-3	Rooster Comb, A727 (Has A Long Plastic Insulator For The Neutral Safety Switch) L1970-77	1	
12991C-3	Rooster Comb, A727 (Has A Long Plastic Insulator For The Neutral Safety Switch) 1978-88	1	
12991D-3	Rooster Comb, A727/A518/A618/48RE (Has A Long Plastic Insulator For The Screw In Neutral Safety Switch) 1989-01	1	
22991E-3	Rooster Comb, A518/A618/48RE (Has A Short Plastic Insulator For The Push In Neutral Safety Switch) 2001-Up	1	
22992	Linkage Lever, A727/A518	1	
22993	Internal Linkage & Rooster Comb, A727	1	
22994	Park Rod, A727	1	
22994A	Park Rod, A518/A618/48RE	1	4471478
22995	Park Pawl Assembly, A727	1	
12995A	Park Pawl Assembly, A518	1	
22996	Fitting, A727/A618/48RE Cooler Line (1/2” Line x 1/4” Pipe) Screw In Flared (Diesel)	1	
12996	Fitting, A727 Cooler Line (5/16” Line x 1/8” Pipe) Screw In Flared	1	
22996A	Fitting, A518 Cooler Line (3/8” Line x 1/4” Pipe) Push In (Gas)	1	52028629
22996B	Fitting, A518/A618/48RE Cooler Line (1/2” Line x 1/4” Pipe) Push In (Diesel)	1	4897792AA
12996B	Fitting, A727 Cooler Line (90 Degree Elbow) (5/16” Line x 1/8” Pipe) Screw In Flared (Can Use 26996)	1	
12996C	Fitting, A727/A518/A618/48RE Cooler Line (3/8” Line x 1/4” Pipe) 1/4” Screw In Flared Male (On Case Side) For Push In Line	1	
12996CK	Repair Kit, A727/A518 Cooler Line Fitting (With 1/4” Pipe Fittings) A Fix For Cracked Cases At The Cooler Fittings (Gas Only) 5 Adapters & 1 Tap Tool (Adapter # S12996C-1)	1	
12996C-1	Adapter, A727/A518 (For The S12996CK Kit)	1	
T22996D	Case Fitting, 48RE Cooler Line (1/2” Screw In Line)(Teckpak)	1	
12996D	Fitting, A518 Cooler Line (3/8” Line x 1/4” Pipe) Push In With Wire Type Clip	1	
12996D-5K	Clip Kit, A727/A518/A618/48RE Push In Cooler Line (6 Clips & O-Rings) (For 1/2” Cooler Lines)	1	
T22996X	Case Fitting, A518/A618/48RE Radiator Line (For External Cooler)(Teckpak)	1	
T22996Z	Radiator Cooler Fitting, 48RE 2006-Up (Teckpak)	1	
12999	Tube Set, A518 Governor	1	

© Whatever It Takes Transmission Parts. Inc.

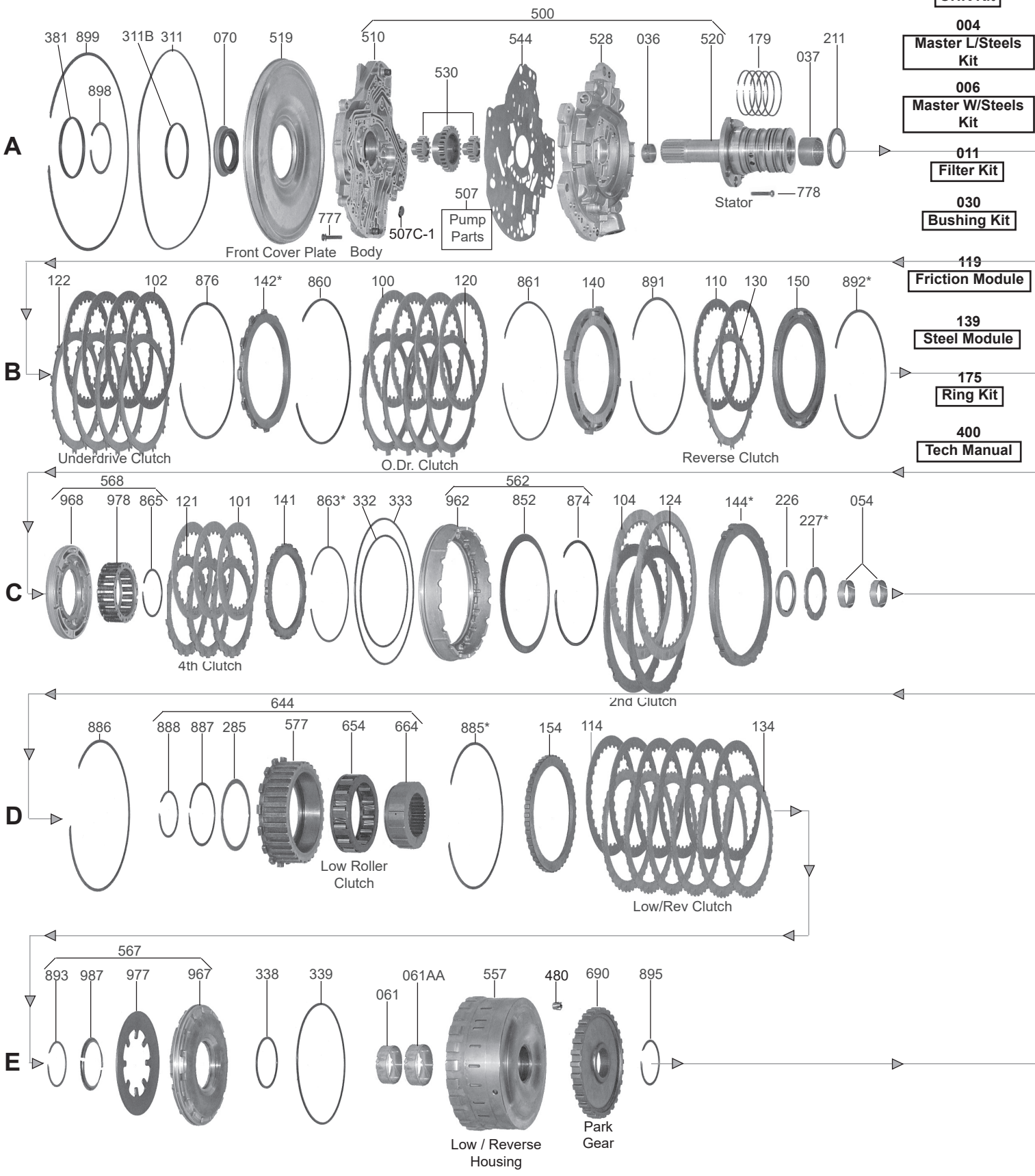

002 OHK Kit

004 Master L/Steels Kit

006 Master W/Steels Kit

011 Filter Kit

030 Bushing Kit

119 Friction Module

139 Steel Module

175 Ring Kit

400 Tech Manual

© Whatever It Takes Transmission Parts. Inc.

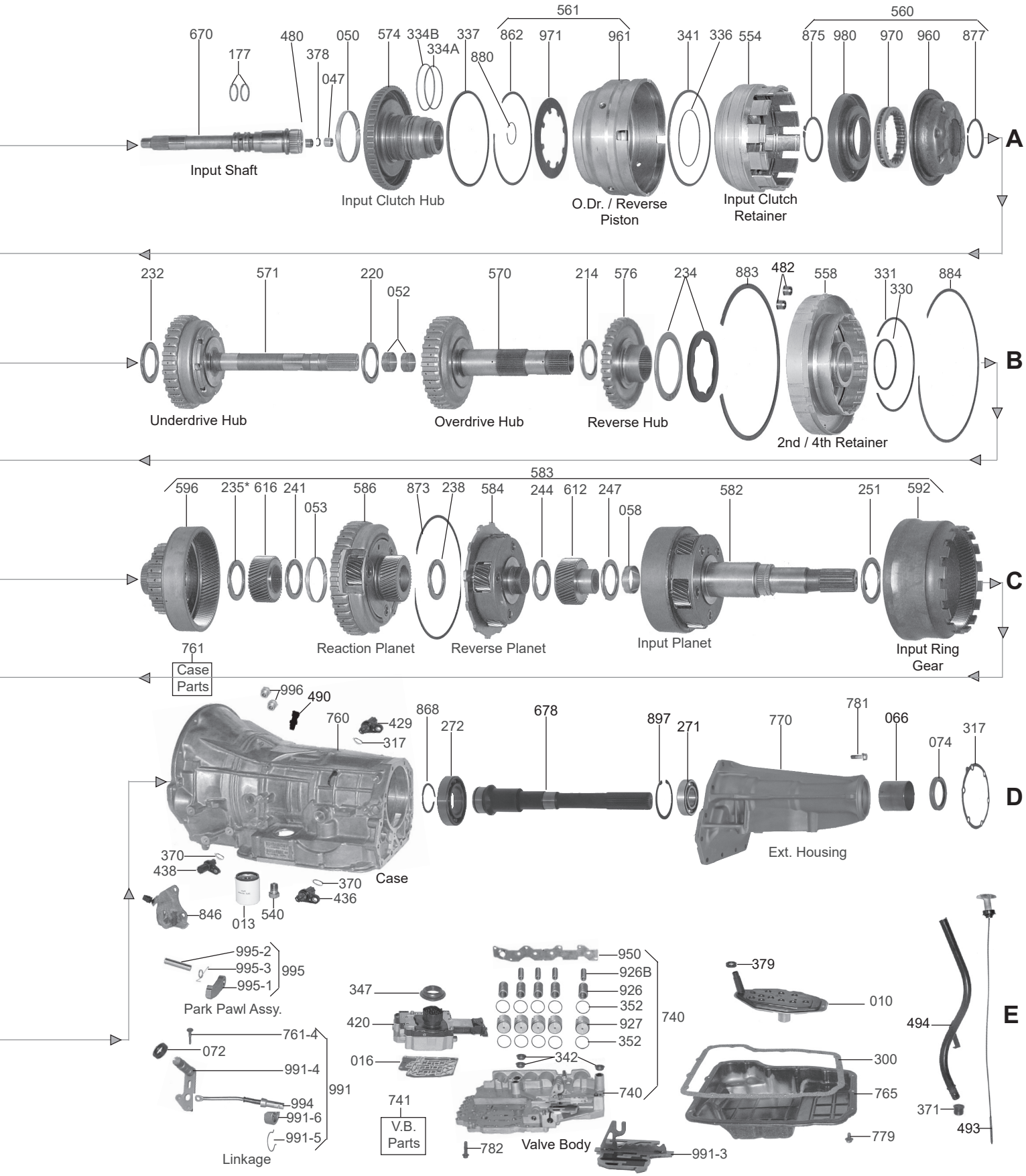

© Whatever It Takes Transmission Parts. Inc.

PART #	OVERHAUL KITS	QTY	REFERENCE #
72002AF	Overhaul Kit, 45RFE/5-45RFE 1999-05 (Farpak)(For Bonded Pistons Sell D72960AK)	1	
720020AAF	Overhaul Kit, 5-45RFE 2006-Up (For Bonded Pistons Sell D72960AK)(Farpak)	1	
72002CF	Overhaul Kit, 68RFE 2007-Up (For Bonded Pistons Sell A72960CK)	1	
72002DF	Overhaul Kit, 65RFE 2012-Up (With Fiber Pan Gasket)	1	
72002EF	Overhaul Kit, 66RFE 2012-Up (With Fiber Pan Gasket)	1	

PART #	MASTER L/STEEL KIT	QTY	REFERENCE #
72004AF	Master L/Steels Kit, 45RFE/5-45RFE 1999-05 (Farpak) (For Bonded Pistons Sell One D72960AK)	1	
72004AAF	Master L/Steels Kit, 5-45RFE 2006-Up (For Bonded Pistons Sell D72960AK or D72960AAK According To Year)(Farpak)	1	
72004CF	Master L/Steels Kit, 68RFE 2007-Up (For Bonded Pistons, Sell A72960CK)	1	
72004DF	Master L/Steels Kit, 65RFE 2007-Up (W/Fiber Pan Gasket)(For Bonded Pistons Sell A72960AK)	1	
72004EF	Master L/Steels Kit, 66RFE 2012-13 (W/Fiber Pan Gasket)(For Bonded Pistons Sell D72960AAK)	1	

PART #	MASTER W/STEEL KIT	QTY	REFERENCE #
72006AF	Master W/Steels Kit, 45RFE/5-45RFE 1999-05 (Farpak) (For Bonded Pistons Sell One D72960AK)	1	
72006AAF	Master W/Steels Kit, 5-45RFE 2006-Up (For Bonded Pistons Sell D72960AK or D72960AAK According To Year)(Farpak)	1	
72006CF	Master W/Steels Kit, 68RFE 2007-Up (For Bonded Pistons, Sell A72960CK)	1	
72006DF	Master W/Steels Kit, 65RFE 2012-Up (W/Fiber Pan Gasket)(For Bonded Pistons Sell A72960AK)	1	
72006EF	Master W/Steels Kit, 66RFE 2012-13 (W/Fiber Pan Gasket)(For Bonded Pistons Sell A72960AAK)	1	

PART #	FILTER	QTY	REFERENCE #
72010A	Filter, 45FE/65/66/68RFE 2WD 1999-Up (Sell 72379A Boot Also)	1	4800029AA
72010AD	Filter, 45RFE/65/66/68RFE 4x4 1999-Up (Sell 72379A Boot Also)	1	5013470AB
72010AE	Filter, 45RFE/65/66/68RFE (4x4) 1999-Up (Comes W/Boot)(With Pressure Relief Valve)	1	



72010AD 72010A

PART #	FILTER KIT	QTY	REFERENCE #
72011A	Filter Kit, 45RFE/68RFE 2WD 1999-Up (Cork)	1	
72011AF	Filter Kit, 45RFE/68RFE 2WD 1999-Up (Farpak)	1	
72011AD	Filter Kit, 45RFE/68RFE 4x4 1999-Up (Cork)	1	
72011ADF	Filter Kit, 45RFE/68RFE 4x4 1999-Up (Farpak)	1	

PART #	MISC. FILTERS	QTY	REFERENCE #
72013A	Filter, 45RFE/68RFE Cooler (Spin-On) 1999-Up	1	4799662
72013AHD	Filter, 45RFE/68RFE Cooler (Spin On)(Steel Threads) 1999-Up	1	
72016A	Filter, 45RFE/5-45RFE Solenoid Assembly 1999-03	1	
72016B	Filter, 45RFE/5-45RFE/65/66/68RFE Solenoid Assembly 2004-Up	1	

PART #	BUSHINGS	QTY	REFERENCE #
72030A	Bushing Kit, 45RFE/545RFE/65RFE 1999-Up	1	
72030C	Bushing Kit, 66/68RFE 2007-Up	1	
72030CE	Bushing Kit, 66/68RFE 4x4 (Enhanced)(10 Pieces)(For 2WD Extension Housing Sell 72066C)	1	
72034C	Bushing, 66/68RFE Body To Center Gear (Must Be Machined Into Body)(Enhanced W/ CT-101 Dry Lubricant W/Indents For Better Oil Retention)	1	
72036A	Bushing, 45RFE/545RFE/65RFE Stator (Front) (.790" Wide)(1.021"OD)(.956"ID) 1999-Up	1	

© Whatever It Takes Transmission Parts. Inc.

72037A ..... Bushing, 45RFE/65/66/68RFE Stator (Rear) (.770" Wide)(1.520"OD)(1.400"ID) 1999-Up ..... 1 .....
72047A ..... Bushing, 45RFE/545RFE/65/66/68 Input Shaft (Rear) (Babbit) (.510" Wide, .825"OD, .705"ID)
..... 1999-Up ..... 1 .....
72047C ..... Bushing, 68RFE Input Shaft (Rear) (Bronze) (.510"Wide, .825"OD, .705"ID) 2007-Up..... 1 .....
72050A ..... Bushing, 45RFE/545RFE/65/66/68 Input Clutch (.375" Wide)(2.910"OD)(2.725"ID) 1999-Up..... 1 .....
72052A ..... Bushing, 45RFE/545RFE/68 Overdrive Hub (Front) (.790" Wide, 1.105"OD, 1.005"ID) 1999-Up.. 1 .....
72052AA..... Bushing, 45RFE/545RFE/65 Overdrive Hub (Rear) (.770" Wide)(1.025"OD)(.960"ID) 1999-Up.... 1 .....
72052C ..... Bushing, 66RFE/68RFE Overdrive Hub (Front)(1.120"ID)..... 1 .....
72052CA..... Bushing, 66RFE/68RFE Overdrive Hub (Rear)(1.108"ID) ..... 1 .....
72053A ..... Bushing, 45RFE/545RFE/65RFE Reaction Planet (.555" Wide, 1.505"OD, 1.390"ID) 1999-Up .... 2 .....
72053C ..... Bushing, 66/68RFE Reaction Planet (1.550"ID) 2007-Up..... 2 .....
72054A ..... Bushing, 45RFE/545RFE/65RFE Reaction Planet Ring Gear (.555" Wide)(1.71"OD)(1.530"ID)
..... 1999-Up ..... 2 .....
72054C ..... Bushing 66RFE/68RFE Reaction Planet Ring Gear (Front & Rear) (.695"Long)
72058A ..... Bushing, 45RFE/545RFE/65/66/68 Input Planet (.435" Wide, 1.540"OD, 1.425"ID) 1999-Up..... 1 .....
72061A ..... Bushing, 45RFE Low/Reverse Clutch Housing (.515" Wide)(2.030"OD)(1.955"ID) 1999-Up..... 2 .....
72061AA..... Bushing, 45RFE/5-45RFE/65RFE Low/Reverse Clutch Housing (Rear)..... 2 .....
72061C ..... Bushing, 66/68RFE Low/Reverse Clutch Housing (.550" Wide, 2.020"OD, 1.915"ID) 2007-Up..... 2 .....
36066T ..... Bushing, 45RFE 2WD Extension Housing (1.690"ID)(Teflon Coated) ..... 1 .....
72066C ..... Bushing, 68RFE Extension Housing (2WD)(2.340"OD) 2007-Up..... 1 ..... 68040720AA

PART #	METAL CLAD SEALS	QTY	REFERENCE #

72070A ..... Seal, 45RFE/5-45RFE/65/66/68RFE Front (Presses Into The Pump Body)(With Flange)
..... 1999-Up 1 4617919
72070C ..... Seal, 5-45RFE/68RFE Front (Presses Into The Front Plate)(No Flange) 2007-Up (Use 72070A). 1 .....
72072A ..... Seal, 45RFE/68RFE Manual Lever 1999-Up ..... 1 .....
36074..... Seal, 45RFE Rear 2WD W/Out Boot 1999-Up..... 1 3515383
72074A ..... Seal, 45RFE Rear 4X4 (2.680"OD) 1999-Up..... 1 4167929
72074CA..... Seal, 68RFE Rear 4x4 (2.665"OD) 2007-Up ..... 1 .....
M520074D ..... Seal, NP241D/NP241DHD/NP261XHD/NP263XHD Rear (Dodge Diesel) 2WD (3.020"OD)
..... (With Boot) ..... 1 .....

PART #	FRICTION CLUTCH	QTY	REFERENCE #

72100A ..... Friction, 45RFE/5-45RFE/65RFE/66RFE Overdrive Clutch (.090")(32 Teeth)(High Energy)
..... 1999-13 ..... 4 4799114
S72100AK ..... Friction & Steel Plate Service Kit, 45RFE/5-45RFE/65RFE/66RFE/68RFE
..... (This Is A Replacement Component For S72961AK-1)(Contains 6 Frictions & 5 Steels (Sonnax). 1 .....
72100AH..... Friction, 45RFE/5-45RFE/65RFE/ 66RFE Overdive Clutch (.090")(GPZ) 1999-13 ..... 4 .....
72100AHPPK . Friction/Steel Kit, 45RFE/5-45RFE/65RFE/66RFE Overdrive/Underdrive Clutch 1999-13
..... (Hi Performance)(Powerpack)..... 1 .....
72100C ..... Friction, 68RFE Overdrive Clutch (.052")(32 Internal Teeth)(1 Sided)(6 3/8"OD) 2007-Up ..... 6 .....
72100CH ..... Friction, 68RFE Overdrive Clutch (.052")(32 Internal Teeth)(1 Sided)6 3/8"OD)(GPZ Material)
..... 2007-Up ..... 6 .....
72101A ..... Friction, 45RFE/5-45RFE/65RFE/66RFE/68RFE 4th Clutch (.090") 24 Teeth (High Energy)
..... 1999-Up 3 4799530
72101AS1..... Friction, 45RFE/5-45RFE/65RFE/66RFE/68RFE 4th Clutch (.090")(24 Teeth)(Stage 1) 1999-Up. 3 .....
72101AH..... Friction, 45RFE/68RFE 4th Clutch (.090")(24 Teeth)(GPZ) 1999-Up ..... 3 .....
72101AHPPK . Friction/Steel Kit, 45RFE/5-45RFE/65RFE 4th Clutch 1998-Up (Hi Performance)(Powerpack)..... 1 .....
72101CHPPK . Friction/Steel Kit, 65RFE/68RFE 4th Clutch 2004-Up (Hi-Performance)..... 1 .....
72102A ..... Friction, 45RFE Underdrive Clutch (.079")(32 Teeth) 1999-Up..... 4 4799106
72102C ..... Friction, 68RFE Underdrive Clutch (.057")(32 Internal Teeth)(1 Sided)(6 3/8"OD) 2007-Up ..... 5 .....
72104A ..... Friction, 45RFE/5-45RFE/65RFE/66RFE/68RFE 2nd Clutch (.090")(40 Teeth)(High Energy)
..... 1999-Up 2-3 4799244
72104AH..... Friction, 45RFE/5-45RFE/65RFE/66RFE/68RFE 2nd Clutch (.090")(40 Teeth)(GPZ) 1999-Up... 2-3 .....
72104AS1..... Friction, 45RFE/5-45RFE/65RFE/66RFE/68RFE 2nd Clutch (.090")(40 Teeth)(Stage 1)
..... 1999-Up ..... 2-3 .....
72104AHPPK . Friction/Steel Kit, 45RFE/5-45RFE/65RFE 2nd Clutch 1998-Up (Hi Performance)(Powerpack).... 1 .....
72104CHPPK . Friction/Steel Kit, 68RFE 2nd Clutch 2007-Up (Hi-Performance) ..... 1 .....
72110A..... Friction, 45RFE/5-45RFE/65RFE/66RFE/68RFE Reverse Clutch (.079")(31 Teeth)(High Energy)
..... 1999-Up 2 4799757
72114A..... Friction, 45RFE/5-45RFE/65RFE Low/Reverse Clutch (.079")(32 Teeth)(High Energy)1999-Up. 6-7 ..... 4799461AB
72114C ..... Friction, 66RFE/68RFE Low/Reverse Clutch (.062")(48 Internal Teeth)(1 Sided) ..... 6-7 .....
72119A..... Friction Module, 45RFE/5-45RFE/ 65RFE (High Energy) 1999-Up..... 1 .....
72119C ..... Friction Module, 68RFE 2007-Up..... 1 .....
72119CH..... Friction Module, 68RFE (GPZ) 2007-Up..... 1 .....
72119CS1..... Friction Module, 68RFE (Stage 1) 2007-Up (2nd & 4th Are Stage 1 Material) ..... 1 .....
72119E ..... Fri Module, 66RFE 2012-Up ..... 1 .....

© Whatever It Takes Transmission Parts. Inc.

PART #	STEEL CLUTCH	QTY	REFERENCE #
72120A	Steel, 45RFE/5-45RFE/65/66RFE Overdrive Clutch (.086")(12 Teeth)(5.400"OD) 1999-13	3	4799398AB
72120C	Friction, 68RFE Overdrive Clutch (.052")(12 External Teeth)(1 Sided)(5.440"ID) 2007-Up	6	
72121A	Steel, 45RFE/5-45RFE/65/66RFE/68RFE 4th Clutch (.100")(20 Teeth)(4.235"ID) 1999-Up	3	4799529
72122A	Steel, 45RFE/5-45RFE/65/66RFE Underdrive & Reverse Clutch (.067")(12 Teeth Notched) (5.400"ID)	5	4799105AB
72122C	Friction, 68RFE Underdrive Clutch (.057")(12 External Teeth)(1 Sided)(5.440"ID) 2007-Up	5	
72124A	Steel, 45RFE/5-45RFE/65RFE/66RFE/68RFE 2nd Clutch (.130")(10 Teeth)(6.750"ID)1999-Up	2-3	4799243
72124AHP	Steel, 45RFE/5-45RFE/65RFE/66RFE/68RFE 2nd Clutch (.130")(10 Teeth)(6.750"ID)(Kolene) 1999-Up	2-3	
72130A	Use 72122A.	5	4799105AB
72130C	Steel, 68RFE Reverse Clutch (.068")(12 Teeth)(5.40"ID) 2007-Up	5	
72134A	Steel, 45RFE/5-45RE/65RFE Low/Reverse Clutch (.068")(45 Teeth)(5.690"ID) 1999-Up	6	4799460
72134AHP	Steel, 45RFE Low/Reverse Clutch (.068")(45 Teeth)(5.690"ID)(Kolene)	6	
72134C	Friction, 66RFE/68RFE Low/Reverse Clutch (.062")(45 External Teeth)(1 Sided) 2007-Up	6	
72139A	Steel Module, 45RFE 1999-Up	1	

PART #	CLUTCH PRESSURE PLATES	QTY	REFERENCE #
72140A	Pressure Plate, 45RFE/68RFE Overdrive Clutch (.390") (4 Teeth, 12 Slots) 1999-Up	1	4799116
S72140C	Pressure Plate, 65REF/66RFE/68RFE Overdrive/Reverse (4 Lug) Reaction Plate (Sonnax)	1	
72140CA	Pressure Plate, 68RFE Overdrive Clutch (.350")(4 Teeth)(12 Slots)(Stamped #1) 2007-Up	1	
72140CB	Pressure Plate, 68RFE Overdrive Clutch (.367")(4 Teeth)(12 Slots)(Stamped #2) 2007-Up	1	
72140CC	Pressure Plate, 68RFE Overdrive Clutch (.383")(4 Teeth)(12 Slots)(No Stamped #) 2007-Up	1	
72141A	Pressure Plate, 45RFE/68RFE 4th Clutch (.196") (20 Teeth) (4.242"ID) 1999-Up	1	4799533
72142A	Pressure Plate, 45RFE Underdrive Clutch (12 Teeth)(.125") 1999-Up	1	4799108AB
72142AA	Pressure Plate, 45RFE Underdrive Clutch (12 Teeth)(.145") 1999-Up	1	4799109AB
72142AB	Pressure Plate, 45RFE Underdrive Clutch (12 Teeth)(.280") 1999-Up	1	4799107AB
72142AC	Pressure Plate, 45RFE Underdrive Clutch (12 Teeth)(.300") 1999-Up	1	
72142AD	Pressure Plate, 45RFE Underdrive Clutch (12 Teeth)(.295")(Offset Lugs) 2007-Up	1	
72142C	Pressure Plate, 68RFE Underdrive Clutch (12 Teeth)(.342") 2007-Up	1	
72144A	Pressure Plate, 45RFE/68RFE 2nd Clutch (Selective)(10 Teeth) (6 15/16"ID) 1999-Up	1	4799687AB
72150A	Pressure Plate, 45RFE Reverse Clutch (No Teeth) (.340" At Edge) 1999-Up	1	4799121
S72150AK	Reaction Plate & Bolt On Anchor Plate Kit, 45RFE/5-45RFE/ 65RFE/66RFE/68RFE This Is A Repalcement Component For S72961AK-1 (Contains Lip Seal, Underdrive & Overdrive Reaction Plate, 2 Anchor Shims, Bolt On Anchor Plate & 12 Screws)(Sonnax)	1	
72150C	Pressure Plate, 68RFE Reverse Clutch (No Teeth) (.265" At Edge) 2007-Up	1	
72154A	Pressure Plate, 45RFE Low/Reverse Clutch (45 Teeth) (.313") (5.690"ID) 1999-Up	1	4799667
72154C	Pressure Plate, 68RFE Low/Reverse Clutch (45 Teeth) (.310") (5.780"ID) 2007-Up	1	

PART #	VALVE BODY KITS	QTY	REFERENCE #
T72165A	Shift Kit, 45RFE/5-45RFE/68RFE 1999-08 (Transgo) (Has A Heavy Duty Accumulator Cover Plate #950)	1	
T72169A	Reprogramming Kit, 45RFE/5-45RFE/68RFE Heavy Duty & High Performance 1999-08 (Transgo)	1	

PART #	OIL SEALING RINGS	QTY	REFERENCE #
72175	Ring Kit, 45RFE	1	
72175A	Ring Kit, 45RFE/5-45RFE 1999-Up (Contains: 5 Metal & 12 PTFE Rings)	1	
72177AT	Ring, 45RFE Input Shaft (1.255"OD)(Teflon) 1999-Up	2	
72177CT	Ring, 68RFE Input Shaft (1.375"OD)(Teflon) 2007-Up	2	
72179A	Ring, 45RFE/68RFE Stator 1999-Up	5	
92191	Ring, 45RFE Accumulator (Non Rotating)(1.013"OD)(Graphite) 1999-Up	10	

PART #	WASHERS & BEARINGS	QTY	REFERENCE #
72201A	Bearing Kit, 45RFE/5-45RFE 1999-Up	1	
72201C	Bearing Kit, 68RFE 2007-Up	1	
72211A	Thrust Bearing, 45RFE/68RFE Pump To Input Clutch Hub (.150" Thick)(2.364"OD)(1.645"ID) 1999-Up (Also Fits 45RFE/68RFE #232, 220, 235, 241, 214)(Also Fits 45RFE # 238, 244, 247)	1-9	4799469
72214A	Bearing W/Races, 45RFE/68RFE Overdrive Hub To Reverse Hub (Use U72211A)	1	
72220A	Bearing W/Races, 45RFE/68RFE Underdrive Hub To Overdrive Hub (Use 72211A)	1	
72226A	Bearing, 45RFE/68RFE 2-4 Drum To Ring Gear Hub (2 Tabs)(.150" Thick)(2.663"OD) (1.945"ID) 1999-Up (Also Fits 45RFE Input Planet Rear #251)	1-2	4799459
72227AA	Washer, 45RFE/68RFE 2-4 Drum To Ring Gear Hub (.082" Thick)(3.020"OD)(2.152"ID) (Steel W/3 Notches) 1999-Up	1	

© Whatever It Takes Transmission Parts. Inc.

72227AB.....Washer, 45RFE/68RFE 2-4 Drum To Ring Gear Hub (.086" Thick)(3.020"OD)(2.152"ID)
.....(Steel W/3 Notches) 1999-Up .....1 .....
72227AC.....Washer, 45RFE/68RFE 2-4 Drum To Ring Gear Hub (.092" Thick)(3.020"OD)(2.152"ID)
.....(Steel W/3 Notches) 1999-Up .....1 .....
72227AD.....Washer, 45RFE/68RFE 2-4 Drum To Ring Gear Hub (.098" Thick)(3.020"OD)(2.152"ID)
.....(Steel W/3 Notches) 1999-Up .....1 .....
72227AE.....Washer, 45RFE/68RFE 2-4 Drum To Ring Gear Hub (.104" Thick)(3.020"OD)(2.152"ID)
.....(Steel W/3 Notches) 1999-Up .....1 .....
72227AF.....Washer, 45RFE/68RFE 2-4 Drum To Ring Gear Hub (.110" Thick)(3.020"OD)(2.152"ID)
.....(Steel W/3 Notches) 1999-Up .....1 .....
72227AG.....Washer, 45RFE/68RFE 2-4 Drum To Ring Gear Hub (.116" Thick)(3.020"OD)(2.152"ID)
.....(Steel W/3 Notches) 1999-Up .....1 .....
72227AH.....Washer, 45RFE/68RFE 2-4 Drum To Ring Gear Hub (.122" Thick)(3.020"OD)(2.152"ID)
.....(Steel W/3 Notches) 1999-Up .....1 .....
72227AJ.....Washer, 45RFE/68RFE 2-4 Drum To Ring Gear Hub (.128" Thick)(3.020"OD)(2.152"ID)
.....(Steel W/3 Notches) 1999-Up .....1 .....
72227BA.....Washer, 45RFE/68RFE 2-4 Drum To Ring Gear Hub (.082" Thick)(3.020"OD)(2.055"ID)
.....(Plastic, W/3 Notches) 1999-Up.....1 .....
72227BB.....Washer, 45RFE/68RFE 2-4 Drum To Ring Gear Hub (.086" Thick)(3.020"OD)(2.055"ID)
.....(Plastic, W/3 Notches) 1999-Up.....1 .....
72227BC.....Washer, 45RFE/68RFE 2-4 Drum To Ring Gear Hub (.092" Thick)(3.020"OD)(2.055"ID)
.....(Plastic, W/3 Notches) 1999-Up.....1 .....
72227BD.....Washer, 45RFE/68RFE 2-4 Drum To Ring Gear Hub (.098" Thick)(3.020"OD)(2.055"ID)
.....(Plastic, W/3 Notches) 1999-Up.....1 .....
72227BE.....Washer, 45RFE/68RFE 2-4 Drum To Ring Gear Hub (.104" Thick)(3.020"OD)(2.055"ID)
.....(Plastic, W/3 Notches) 1999-Up.....1 .....
72227BF.....Washer, 45RFE/68RFE 2-4 Drum To Ring Gear Hub (.110" Thick)(3.020"OD)(2.055"ID)
.....(Plastic, W/3 Notches) 1999-Up.....1 .....
72227BG.....Washer, 45RFE/68RFE 2-4 Drum To Ring Gear Hub (.116" Thick)(3.020"OD)(2.055"ID)
.....(Plastic, W/3 Notches) 1999-Up.....1 .....
72227BH.....Washer, 45RFE/68RFE 2-4 Drum To Ring Gear Hub (.122" Thick)(3.020"OD)(2.055"ID)
.....(Plastic, W/3 Notches) 1999-Up.....1 .....
72227BJ.....Washer, 45RFE/68RFE 2-4 Drum To Ring Gear Hub (.128" Thick)(3.020"OD)(2.055"ID)
.....(Plastic, W/3 Notches) 1999-Up.....1 .....
72227BK.....Washer Kit, 45RFE/66RFE/ 68RFE Reaction Planet (Contains: 11 Plastic Washers) 2003-18.....1 .....
72232A.....Bearing W/Races, 45RFE/68RFE Input Clutch Hub To Underdrive Hub (Use 72211A).....1 .....
72234A.....Bearing W/Races, 45RFE/68RFE Reverse Hub To Drum (.240" Thick)(3.950"ID) 1999-Up .....1 .....4799936AB
72235A.....Bearing W/Races, 45RFE/68RFE Reaction Planet Ring Gear To Reaction Sun Gear
.....(Use 72211A) .....1 .....
72238A.....Bearing W/Races, 45RFE Reaction Planet To Reverse Planet (Use 72211A) .....1 .....
72238C.....Bearing W/Races, 68RFE Reaction Planet Sun Gear To Reverse Planet (.208" Thick)(2.705"OD)
.....(1.935"ID) 2007-Up (Also Fits 68RFE Input Planet (Rear) #251) .....1-2.....
72241A.....Bearing W/Races, 45RFE/68RFE Reaction SunGear To Reaction Planet (Use 72211A).....1 .....
72244A.....Bearing W/Races, 45RFE Reverse Planet To Input Sun Gear (Use 72211A) .....1 .....
72244AA.....Bearing W/Races, 45RFE Reverse Planet To Input Sun Gear (.223"Thick) Mid 2004-Up .....1 .....
72244C.....Bearing W/Races, 68RFE Reverse Planet To Input Sun Gear (.225" Thick)(2.475"OD)(1.530"ID)
.....2007-Up .....1 .....
72247A.....Bearing W/Races, 45RFE Input Planet Sun Gear To Input Planet (Use 72211A).....1 .....
72247C.....Bearing W/Races, 68RFE Input Sun Gear To Input Planet (Stays In Planet) 2007-Up .....1 .....
72251A.....Bearing W/Races, 45RFE Input Planet (Rear)(Use 72226A) .....1 .....
72251C.....Bearing W/Races, 68RFE Input Planet (Rear)(Use 72238C) .....1 .....
72271A.....Ball Bearing, 45RFE (4x4) Extension Housing (.668" Thick)(2.835"OD)(1.375"ID)(Cast # 6208A30)
.....1999-Up (Also Fits 45RFE (2WD) Extension Housing Rear).....1 2466224
72271B.....Ball Bearing, 45RFE/68RFE (2WD) Extension Housing (Front)(.825" Thick)(3.935"OD)(2.165"ID)
.....(10 Balls)(Cast # SKF 6211/C3) 1999-Up.....1 .....
72271C.....Ball Bearing, 68RFE Extension Housing (.705" Thick)(3.150"OD)(1.573"ID)(Cast # China Peer
.....6208) 2007-Up .....1 .....
72272A.....Ball Bearing, 68RFE Output Shaft (Rear)(.625"Thick)(2.950"OD)(1.770"ID)(12 Balls)(Cast #6009)
.....(KBC) 1999-Up.....1 .....
72285A.....Shim, 45RFE Low/Sprag (3.930"OD)(.040" Thick)(1 Inner Tab) 1999-Up .....1 .....
72285C.....Shim, 68RFE Low Sprag (.030" Thick)(4.405"OD)(3.270"ID)(3 Long Slots) 2007-Up .....2 .....

PART #	GASKETS & RUBBER COMPONENTS	QTY	REFERENCE #

72300A.....Gasket, 45RFE/5-45RFE/65/66/68RFE Pan (Cork) 1999-Up.....1 .....
72300AF.....Gasket, 45RFE/5-45RFE/65/66/68RFE Pan (Farpak) 1999-Up .....1 .....
72311A.....O-Ring, 45RFE/5-45RFE Front Plate Cover (Outer) 1999-Up.....1 4799003
72311B.....O-Ring, 45RFE/5-45RFE Front Plate Cover (Inner) 1999-Up.....1 .....
72332A.....D-Ring, 45RFE/5-45RFE 2nd Clutch Piston (Inner) 1999-Up.....1 .....
74333A.....D-Ring, 45RFE/5-45RFE 2nd Clutch Piston (Outer) 1999-Up.....1 .....

© Whatever It Takes Transmission Parts. Inc.

PART #	GASKETS & RUBBER COMPONENTS (Continued)	QTY	REFERENCE #
S72341AOS	Lip Seal, 45RFE/545RFE/65RFE/66RFE/68RFE Overdrive Clutch Housing (ONLY FITS S72961AK)(Will NOT Fit OE Housing)(Oversized)(Sonnax)	1	
72342A	Seal, 45RFE Valve Body Clutch Feed (3 Per Transmission) 1999-Up	3	
72371A	Seal, 45RFE/68RFE Filler Tube 1999-Up	1	
72379A	Boot, 45RFE/65/68/68RFE Filter Neck (Sell W/72010A & 72010AD) 1999-Up	1	4799964AB
72381A	O-Ring, 45RFE/5-45RFE/65/66/68RFE Converter Hub To Pump Body 1999-Up	1	

PART #	TECHNICAL MANUALS	QTY	REFERENCE #
72400A	Technical Manual, 45RFE (Chrysler RWD) 1999-Up (ATSG)	1	45RFE
A72400A	Rebuild Manual, 45RFE Rebuild Procedures (ATRA)	1	

PART #	ELECTRICAL COMPONENTS	QTY	REFERENCE #
72420A	Solenoid Assembly, 45RFE/5-45RFE (23 Prong Connector) 1999-03 (Rebuilt)	1	4799934AC
72420B	Solenoid Assembly, 45RFE/5-45RFE/65RFE/66RFE/68RFE (23 Prong White Connector) 2004-Up (This Will Fit 2011-Up With Grey Connector With Less Prongs)(This Is Updated)(For 1999-03 Sell D72991-3 Also)(This Also Comes With The 72016B)	1	
72420BA	Solenoid Assembly, 45RFE/5-45RFE/65RFE/66RFE/68RFE(23 Prong Gray Connector)2011-Up	1	
72429A	Sensor, 45RFE/68RFE Line Pressure Transducer (3 Prong Double O-Rings) (On Passenger Side Towards Rear Of Case) 1999-Up	1	4799758
72436A	Use 72438A.	1	4799061
72438A	Speed Sensor, 45RFE/68RFE Input & Output 1999-Up	2	4799061
S72445A	Wire Harness, 45RFE/5-45RFE With Line Pressure Booster (Sonnax) Goes Between Line Pressure Transducer & Wire Harness)	1	
72445A-2	Repair Kit, 45RFE/545RFE/65RFE/66RFE/68RFE Speed Senor Harness 1999-Up	1	
S72445C	Wire Harness, 68RFE With Line Pressure Booster (Sonnax) Goes Between Line Pressure Transducer & Wire Harness)	1	
S72445PK	Wire Harness Kit, 45RFE/5-45RFE/65RFE/66RFE/68RFE Line Pressure Booster (Sonnax) (Goes Between Line Pressure Transducer & Wire Harness)(Contains: Wire Harness With Connectors & Pressure Regulator Spring)	1	
72480A	Ball & Capsule, 45RFE Drainback Check Valve 1999-Up (Inside Input Shaft (Rear)	1	
44490	Case Vent Tube, 45RFE/68RFE	1	

PART #	HARD PARTS	QTY	REFERENCE #
72500A	Complete Pump, 45RFE (1st Design) (With S72507FK Already Installed)(Less Valves) (Uses A Front Seal In Body) (Can Use 72500AA or 72500AB)	1	
72500AA	Complete Pump, 45RFE (2nd Design) (With S72507FK Already Installed)(Less Valves) (Uses A Front Seal In Body) (Can Use 72500A or 72500AB)	1	
72500AB	Complete Pump, 45RFE/5-45RFE (3rd Design)(With S72507FK Already Installed)(Less Valves) (Uses A Front Seal In Body)(Can Use 72500A or 72500AA)	1	
72500AC	Complete Pump, 65RFE (4th Design)(With S72507FK Already Installed)(Less Valves) (Front Seal Is Not In The Body, It Is In The Front Cover Plate #519)	1	
72500C	Pump Complete, 66/68RFE (Body Cast # 52119617AA)(W/S72507FK Already Installed) 2007-Up	1	

PART #	PUMP COMPONENTS	QTY	REFERENCE #
S72507C-1	Shuttle Valve, 45RFE/68RFE (Flat)(In The Pump Body, Under The Pump Plate) 1999-Up	1	
S72507CA-3	Spring, 45RFE TCC Accumulator (5 Per Pack) (Sonnax)	1	
S72507CK	Valve Kit, 45RFE/5-45RFE/68RFE TCC Switch Valve (Oversized)(Contains: Valve & Spring) (Must Use T-F-44912-TL8 & T-VB-Fix Tools)(Sonnax)	1	
T-F-44912-TL8	Tool For S72507CK	1	
T-F-44912-TL10	Tool For S72507PK		
S72507F-3K	Spring Set, 45RFE/68RFE Torque Converter Limit Valve Spring (5 Per Pack)(Sonnax) 1999-Up	1	
S72507FK	Valve & Sleeve Kit, 45RFE/68RFE TC Limit Valve (Contains: Valve, Sleeve, Spring & Retainer Plate)(Must Use Tool #T-F-44912-TL & T-VB-Fix).	1	
S72507PK	Valve Kit, 45RFE/5-45RFE/65RFE/66RFE/68RFE Pressure Regulator (Oversized)(Contains Valve & Spring)(Sonnax) (Must Use T-F-44912-TL10 & T-VB-Fix)		
T-F-44912-TL	Tool For S72507FK	1	
S72507F-3K	Spring Set, 45RFE/5-45RFE Torque Converter Limit Valve Spring (5 Per Pack) 1999-Up (Sonnax)	1	

PART #	HARD PARTS (Continued)	QTY	REFERENCE #
72510A	Pump Body, 45RFE/5-45RFE With 3 Gears (Uses A Front Seal) 1999-4/07	1	4799565

© Whatever It Takes Transmission Parts. Inc.

72510AC	Pump Body, 65RFE With 3 Gears (Does Not Use A Front Seal In Body, It Is In The Front Cover Plate #519) 5/2007-Up	1		
72510C	Pump Body, 66/68RFE (.590" Thick Gears)(Hollow Outer Gears)(Cast # 52119617AA) 2007-Up.	1		
72519A	Cover, 45RFE Front Plate (Has An Inner & Outer O-Ring) 1999-4/07	1		4799609
72519AA	Cover, 65RFE Front Plate (Has An Outer O-Ring Only)(Comes With The O-Ring & Seal)	1		
72519C	Cover, 66/68RFE Front Plate (Has An Outer O-Ring Only, The Front Seal Presses Into This Cover) 2007-Up	1		
72520A	Stator Tube, 545RFE/65RFE (7 5/8" Long) (With A Front Bushing) 1999-Up	1		4799580AB
72520C	Stator Tube, 66RFE (8 3/8" Long) (Without A Front Bushing) 2007-Up	1		
72528A	Stator Body, 45RFE (1st Design) (With S72507FK Already Installed)(Less Valves)	1		4799576
72528AA	Stator Body, 45RFE (2nd Design) (With S72507FK Already Installed)(Less Valves)	1		
72528AB	Stator Body, 68RFE/5-45RFE/68RFE (3rd Design)(With S72507FK Already Installed) (Less Valves)	1		
72530A	Pump Gear Set, 545RFE/65RFE (With 2 Lugs For Converter Hub) 1999-Up	1		
72530C	Pump Gear Set, 66/68RFE (With 4 Lugs For Converter Hub) 2007-Up	1		
72540A	By-Pass, 45RFE/68RFE Cooler (Screws In Case) 1999-Up	1		
72544A	Plate, 45RFE Pump Seperator (For 1st & 2nd Design Stator Body #528)	1		
72544AB	Plate, 45RFE/5-45RFE Pump Seperator (For 3rd Design Stator Body #528)	1		
72544C	Plate, 68RFE Seperator Pump 2007-Up	1		
72544CHP	Plate, 65/6668RFE Pump (1st Design) (Also Fits 45RFE & 545RFE) (Improved Lube Features Over The OE Plates)	1		
72554A	Drum, 45RFE Input (Aluminum) (12 Notches) (7 3/16"OD) 1999-Up (Bevel Above Double Snap Ring Groove Is .040" Wide)	1		4799648
72554C	Drum, 66/68RFE Input (Aluminum)(12 Notches)(7 3/16"OD) 1999-Up (Bevel Above Double Snap Ring Groove Is .120" Wide)	1		
72557A	Drum, 45RFE Low/Reverse Clutch (24 Slots) (24 Lugs) 2 Bushings (6 Clutch)(Uses An Aluminum Piston) 1999-Up	1		4799635
72557C	Drum, 68RFE Low/Reverse Clutch (24 Slots) (24 Lugs) 2 Bushings (7 Clutch)(Uses A Bonded Piston) 2007-Up	1		
72558A	Drum, 45RFE 2-4 Clutch (3 Clutch) Aluminum (10 Outer Lugs)(Uses An Aluminum Piston # 968) 1999-06	1		4799498
72558C	Drum, 45RFE/68RFE 2-4 Clutch (3 Clutch)(Uses A Bonded Piston #968) 2007-Up	1		
72558CHPK	Drum Kit, 68RFE Center Support/4th Clutch Housing (Billet)(5 Clutch)(Features Thicker 4th Clutch Snap Ring Groove, 4th Clutch Billet Piston W/Solid Apply Area, Custom Pressure Plate, GPZ Clutches and Steels)	1		
72560A	Piston Kit, 45RFE/68RFE Underdrive Clutch (2 Bonded Pistons) 1999-Up	1		
72562A	Piston Kit, 45RFE 2nd Clutch (Aluminum Piston)	1		
72562C	Piston Kit, 68RFE 2nd Clutch (Bonded Piston) 2007-Up	1		
72567A	Piston Kit, 45RFE Low/Reverse Clutch (Aluminum Piston)(Cast #4799639) 1999-Up	1		
72567C	Piston Kit, 68RFE Low/Reverse Clutch (Bonded Piston)(Cast # 52119505AA) 2007-Up	1		
72568A	Piston Kit, 45RFE 4th Clutch (Aluminum Piston)	1		
72568C	Piston Kit, 68RFE 4th Clutch (Bonded Piston) 2007-Up	1		
72570A	Overdrive Hub, 45RFE (7 3/4" Long) 1999-Up	1		4799550
72570C	Overdrive Hub, 68RFE (7 1/4" Long) 2007-Up	1		
72571A	Underdrive Hub, 45RFE (10 1/5" Long)	1		4799546
72571C	Underdrive Hub, 68RFE (9 7/8" Long) 2007-Up	1		
72574A	Input Clutch Hub, 45RFE (60 Teeth) Outer (2.715"ID At Bushing) Has A Beveled Shoulder Under The #960 Piston	1		4799536AC
72574AA	Input Clutch Hub, 45RFE/68RFE (60 Teeth) Outer (2.715"ID At Bushing) Has A Square Shoulder Under The #960 Piston	1		
72576A	Reverse Hub, 45RFE (Stamped Steel) 1999-Up	1		4799556
72576C	Reverse Hub, 68RFE (Machined Steel) 2007-Up	1		
72577C	Outer Race, 68RFE Low Sprag (1.280" Thick)(4.420"ID)(48 Outer Lugs) 2007-Up	1		
72582A	Planet, 45RFE Input (5 Gear) (11" Long) 4x4 (2 3/4" From Surface Where Bearing # 251 Sets To Shoulder Where The Park Gear Sets)(Uses A .555" Thick Park Gear)	1		4799501
72582AA	Planet, 45RFE Input (5 Gear) (11" Long) 4x4 (2 5/8" From Surface Where Bearing #251 Sets To Shoulder Where The Park Gear Sets)(Uses A .670" Thick Park Gear)	1		
72582B	Planet, 45RFE (5 Gear) 2WD (Does Not Come With Output Shaft) 1999-Up	1		
72582C	Planet, 68RFE Input (6 Gear) 10 1/4" Long) 4x4 (25 Teeth Pinions) (1.455"OD Splines) 2007-Up	1		
72583A	Planet Kit, 45RFE 4x4 (42 Teeth Sungears)(Input Planet Is 11" Long & Uses A .555" Thick Park Gear) 1999-Up	1		
72583AA	Planet Kit, 45RFE 4x4 (42 Teeth Sungears)(Input Planet Is 11" Long & Uses A .670" Thick Park Gear) 1999-Up	1		
72583C	Planet Kit, 68RFE 4x4 (6 Gear Planets)(Input Planet Is 10 1/4" Long) 2007-Up	1		
72584A	Planet, 45RFE Reverse (4 Gear) (12 Lugs) (1.640"OD At Step For Bearing #244) 1999-E04	1		4799503
72584AA	Planet, 45RFE Reverse (4 Gear)(12 Lugs)(1.605"OD At Step For Bearing #244) Mid 2004-Up	1		
72584C	Planet, 68RFE Reverse (With Reaction Planet Ring Gear)(6 Gear)(20 Outer Lugs) 2007-Up	1		
72586A	Planet, 45RFE Reaction (42 Teeth Sun Gear) (3 Gear) (40 Outer Clutch Splines)	1		4799619
72586C	Planet, 68RFE Reaction (63 Teeth Sun Gear) (6 Gear) (40 Clutch Splines) 2007-Up	1		

© Whatever It Takes Transmission Parts. Inc.

PART #	HARD PARTS (Continued)	QTY	REFERENCE #
72592A	Ring Gear, 45RFE Input (3.400" Thick) (16 Lugs) (12 Notches)	1	4799501
72592C	Ring Gear, 68RFE Input (87 Teeth)(3.390" Thick)(20 Front Lugs)(With 48 Splines On The Rear For Outer Sprag Race) 2007-Up	1	
72596A	Hub/Ring Gear, 45RFE 2nd Clutch To Reaction Planet (84 Teeth) (5.914"OD) (24 Teeth Clutch)	1	4799604
72596C	Hub/Ring Gear, 68RFE 2nd Clutch (24 Teeth Hub)(63 Teeth Sun Gear) 2007-Up	1	
72612A	Sun Gear, 45RFE Input (42 Teeth Left Angle) (2.650"OD) (2.070" Long With Nose)	1	4799586
72612AA	Sun Gear, 45RFE Input (42 Teeth Left Angle) (2.650"OD) (2.015" Long With Nose)	1	
72612C	Sun Gear, 68RFE Input (39 Teeth Left Angle) (2.405"OD) (2.285" Long) 2007-Up	1	
72616A	Sun Gear, 45RFE Reaction (42 Teeth Left Angle) (2.650"OD) (1.215" Thick)	1	4799602

PART #	SPRAGS & ONE WAY CLUTCHES	QTY	REFERENCE #
72644A	Sprag Assembly, 45RFE Low (14 Roller Plastic Cage) (16 Lugs On Outer Race)	1	4799465
72644C	Sprag Assembly, 68RFE Low (36 Elements)(48 Outer Splines) 2007-Up	1	
72644CP	Sprag Assembly, 68RFE Low Reverse (w/Inner & Outer Races)(Hi-Performace) 2007-Up	1	
72654C	Sprag, 68RFE Low (36 Elements) (Plastic Cage) 2007-Up	1	
72664C	Inner Race, 68RFE Low Sprag (.790" Thick)(3.685"OD) 2007-Up	1	

PART #	HARD PARTS (Continued)	QTY	REFERENCE #
72670A	Input Shaft, 45RFE (10 1/4" Long)(29 Splines) 1999-Up	1	4799537
72670AHP	Input Shaft, 545RFE/65RFE Replacement Part For High Energy Power/Torque Applications)	1	
72670C	Input Shaft, 66/68RFE (11 3/4" Long)(27 Splines) 2007-Up	1	
72678B	Output Shaft, 45RFE 2WD (14 3/8" Long) 1999-Up (Shaft Is Not Made To The Planet)	1	
72678C	Output Shaft, 68RFE (2WD)(14 1/4" Long)(Shaft Is Not Made To Planet)1999-Up	1	
72690A	Park Gear, 45RFE (30 Lugs) (6 5/16"OD) (.555" Thick) 1999-Up	1	4799493
72690AA	Park Gear, 45RFE/68RFE (30 Lugs) (6 5/16"OD) (.670" Thick) 1999-Up	1	
72740A	Valve Body, 45RFE W/Out Solenoids (Cast #04799655) 1999-Up	1	4799588
72740C	Valve Body, 68RFE (Diesel)(Without Solenoids) 2007-Up (Cast # 04799591)	1	
72740CA	Valve Body, 68RFE(Diesel) (W/Out Solenoids) 2009-Up	1	

PART #	VALVE BODY COMPONENTS	QTY	REFERENCE #
A12741A-5	Check Ball, Chrysler (All) (11/32"OD) (Torlon)	AR	
S92741C-6	Plugs, 45RFE/5-45RFE/68RFE Switch Valve (2 Plugs)(Non VLP Units)	1	
S92741CA-6	Plugs, 45RFE/5-45RFE/68RFE Switch Valve (Oversized)(Non VLP Units)(Use T-92835-RM) (Contains: 2 Oversized Replacement Plugs and 1 End Plug)	1	
T-92835-RM	Reamer, 45RFE For Oversized Plugs #S92741CA-6 (Sonnax)	1	
S92741CB-6	Plugs, 45RFE/5-45RFE/68RFE Solenoid Switch Valve Plug Kit (Oversized)(Must Use T-F-92835-TL33 & T-VB-Fix)(Sonnax)	1	
T-F-92835-TL33	Tool Kit For S92741CBSK (Contains Reamer, Reamer jig, And Guide Pin)(Sonnax)	1	
S92741CBSK	Valve Kit, 45RFE/5-45RFE/68RFE TCC Control & Plunger Valve Kit (Oversized)(Must Use T-F-92835-TL33 And T-VB-FIX)(Sonnax)	1	
A72741CHP	Channel Plate, 68RFE Billet Valve Body (1pc)(Alum) (CNC Made)(Will Not Flex Or Warp Under Extreme Use) 2007-Up (Also Fits 545RFE 1999-11)	1	
A72741CHPK	Valve Body Kit, 68RFE (Diesel) (Tuneless 235PSI) L2007-10 (Revmax) (Contains Seperator Plate, Gaskets, Accumulator Spring, Accumulator Retention Plate, Pressure Regulator Spring, Converter Regulator Valve, Pan Gasket, Pump Plate, And Metal Filter Thread Insert)	1	
A72741CAHPK	Valve Body Kit, 68RFE (Diesel) (Tuneless 235PSI)(Grey Plug Style) 2011-Up (Revmax)(Contains Seperator Plate, Gaskets, Accumulator Spring, Accumulator Retention Plate, Pressure Regulator Spring, Converter Regulator Valve, Pan Gasket, Pump Plate, and Metal Filter Thread Insert)	1	
S92741CS-1	Valve, 5-45RFE Solenoid Switch (Oversize) (Sonnax) Must Use T-F-92835-TL Reamer	1	
T-F-92835-TL	Reamer, 5-45RFE For S92741CS-1	1	
A92741LA	Valve Repair, 45RFE/5-45RFE/68RFE Solenoid Switch (Without Tool)(Transgo) (Fits VB's With .453 Large Land Diameter)	1	
A92741LAK	Valve Repair, 45RFE/5-45RFE/68RFE Solenoid Switch (With Tool)(Transgo)(Fits VB's With .453 Large Land Diameter)	1	
S92741CSK	Valve Kit, 45RFE/5-45RFE/68RFE Solenoid Switch (.453"OD)(Oversize)(Sonnax) (Contains: Oversize Valve, Valve Plugs, End Plugs)(Must Use T-F-92535-TL31)	1	
T-F-92835-TL31	Reamer For S92741CSK	1	
S92741CASK	Valve Kit, 45RFE/5-45RFE/68RFE Solenoid Switch (.420"OD)(Oversize)(Sonnax) (Contains: Oversize Valve, Valve Plugs, End Plug)(Must Use T-F-92835-TL32)	1	
T-F-92835-TL32	Reamer For S92741CASK	1	
S92741PK	Valve Kit, 45RFE/5-45RFE/68RFE Converter Regulator (2 Valves)(Sonnax)	1	

PART #	HARD PARTS (Continued)	QTY	REFERENCE #
72760A	Case, 45RFE (7 3/4" Top Bolts) 15 Pan Bolts (Double Starter) (Cast #4799660)	1	4799613

© Whatever It Takes Transmission Parts. Inc.

72760C.....Case, 68RFE (Diesel)(6 1/4" Top Bolts)(Starter At 3:00)(Cast # 52119564) 2007-Up.....1.....
72765A.....Pan, 45RFE/5-45RFE/68RFE (15 Bolts) 4x4 (3 5/8" Deep In Corner)(Has A Step Across The Pan)
.....1999-Up.....1.....5013681AA
72765AA.....Pan, 45RFE/5-45RFE/68RFE (15 Bolt) 2WD (2 15/16" Deep In The Corner)(Has A Small Center
.....Sump For The Filter Pick-Up) 1999-Up.....1.....
72765AB.....Pan, 5-45RFE/66RFE/68RFE (15 Bolt)(2WD & 4x4)(3 13/16" Deep In The Corner)(Has A Step
.....Across The Pan) 2012-Up.....1.....
72770AE.....Extension Housing, 45RFE (4 1/2" Long) Aluminum (6 Bolts To Transfer Case) 4 Bolt
.....Mount (Cast #52107719) 1999-Up.....1.....52107719
72770AF.....Extension Housing, 45RFE (5 3/4" Long) Aluminum (6 Bolts To Transfer Case) 4 Bolt
.....Mount (Cast #52098690) 1999-Up.....1.....
72770B.....Extension Housing, 45RFE 2WD (15" Long)(3 Bolt Mount) 1999-Up.....1.....
72770C.....Extension Housing, 68RFE 2WD (14 3/4"Long)(3 Bolt Bottom Mount)(Cast #5211997AA)
.....2007-Up.....1.....
72770CA.....ExtensionHousing, 68RFE 4x4 (4 1/8" Long)(Aluminum)(2 Threaded Bosses On Drivers Side)
.....2007-Up.....1.....
72777AK.....Bolt Set, 45RFE Pump To Case (1 5/8" Long) (10 mm) (6 Pieces).....1.....
72777CK.....Bolt Set, 68RFE Pump Body To Stator (24 Pieces)(T25 Torx Head) 2007-Up.....1.....
72778ABK.....Bolt Set, 45RFE Pump Body To Stator Plate (24 Pieces) (1 1/8" Long) (Torx).....1.....
72778AK.....Bolt Set, 45RFE Stator Tube To Body (5 Pieces) (1 7/16" Long) (Torx).....1.....
72778CK.....Bolt Set, 68RFE Stator Tube To Stator Body (5 Pieces)(T27 Torx Head) 2007-Up.....1.....
72779AK.....Bolt Set, 45RFE/68RFE Pan (10 mm) (13/16" Long) (15 Pieces) 1999-Up.....1.....
72781AK.....Bolt Set, 45RFE/68RFE Extension Housing To Case (1 11/16" Long) (12 Pieces) 1999-Up.....1.....
72782AK.....Bolt Set, 45RFE Valve Body To Case (10 mm) (1 7/16" Long) (6 Pieces) 1999-Up.....1.....
72792AK.....Bolt Set, 45RFE Accumulator Cover To Valve Body 1999-Up.....1.....
72799A.....Bolt, 45RFE Detent To Plate To Valve Body W/Shoulder (11/16" Long) Torx 1999-Up.....1.....
72852A.....Cushion, 45RFE/68RFE 2nd Clutch (.068" Thick) (6 7/8"OD) 1999-Up.....1.....4799521
72860A.....Snap Ring, 45RFE/68RFE Holds Underdrive Pressure Plate In Retainer (.095")(Flat) 1999-Up...1.....
72861A.....Snap Ring, 45RFE/68RFE Sets Under Reverse Pressure Plate (8 1/4"OD)(.059" Thick)
.....(Wavy) 1999-Up.....1.....4799118
72862A.....Snap Ring, 45RFE/68RFE Holds Return Spring In Piston (6 5/16"OD) (.060" Thick) 1999-Up.....1.....4799088
72863A.....Snap Ring, 45RFE/68RFE Holds 4th Clutch Pressure Plate In (6"OD)(Selective) 1999-Up.....1.....
72865A.....Snap Ring, 45RFE/68RFE Holds 4th Clutch Retainer In (2.772"OD) (.061" Thick) 1999-Up.....1.....4799528AB
72868A.....Snap Ring, 68RFE Holds Front Ball Bearing To Output Shaft (.075"Thick)(.155"Wide) 1999-Up..1.....
72873A.....Snap Ring, 45RFE Holds Reverse Planet To Input Ring Gear (7 3/16"OD) (.060" Thick).....1.....4799247
72873C.....Snap Ring, 68RFE Holds Reverse Planet To Input Ring Gear (.060" Thick)(7 9/16"OD) 2007-Up 1.....
72874A.....Snap Ring, 45RFE/68RFE Holds 2nd Clutch Retainer In (.060" Thick) (.223" Wide) 1999-Up.....1.....4799522AB
72875A.....Snap Ring, 45RFE/68RFE Holds Piston In Input Clutch Retainer (3.125"OD)(.092" Thick)
.....(2 Eyelets) 1999-Up.....1.....4799097
72876A.....Snap Ring, 45RFE/68RFE Holds Underdrive Clutches In Retainer (7 3/8"OD) (.060" Thick)
.....(Flat) 1999-Up.....1.....4799760
72877A.....Snap Ring, 45RFE/68RFE Holds Underdrive Piston In Retainer (2.405"OD) (.079" Thick)
.....(2 Eyelets) 1999-Up.....1.....4799112
72880A.....Snap Ring, 45RFE/68RFE Holds Input Shaft To Clutch Hub (1.490"OD) (.062" Thick)
.....(Wire Type) 1999-Up.....1.....4799538
72883A.....Snap Ring, 45RFE/68RFE Holds 2-4 Drum In Case (9 3/16"OD)(.116" Thick)(Beveled) 1999-Up 1.....4799680
72884A.....Snap Ring, 45RFE/68RFE 2-4 Drum Stop (8 13/16"OD) (.060" Thick) 1999-Up.....1.....4799174
72885A.....Snap Ring, 45RFE/68RFE Holds Low/Reverse Pressure Plate In (Selective) (7 9/16"OD)
.....1999-Up.....1.....
72886A.....Snap Ring, 45RFE/68RFE Low/Reverse Drum To Case (8 1/4"OD) (.069" Thick)(Beveled)
.....1999-Up.....1.....
72887A.....Snap Ring, 45RFE Low Sprag Race To Race (3.595"OD) (.039" Thick).....1.....
72887C.....Snap Ring, 68RFE Holds Low Sprag To Race (.046" Thick)(4.632"OD) 2007-Up.....1.....
72888A.....Snap Ring, 45RFE Low Sprag To Drum (2.585"OD) (.062" Thick).....1.....4799863AA
72891A.....Snap Ring, 45RFE/68RFE Overdrive Clutch (Top) (8 1/8"OD) (.060" Thick) 1999-Up.....1.....4799117
72892AA.....Snap Ring, 45RFE/68RFE Reverse Clutch (Top)(.066" Thick)(7 1/8" OD) 1999-Up.....1.....
72892AB.....Snap Ring, 45RFE/68RFE Reverse Clutch (Top)(.072" Thick)(7 1/8" OD) 1999-Up.....1.....
72892AC.....Snap Ring, 45RFE/68RFE Reverse Clutch (Top)(.086" Thick)(7 1/8" OD) 1999-Up.....1.....
72894B.....Snap Ring, 45RFE (2WD) Holds Front Extension Housing To Output Shaft (.080" Thick)
.....(2.295"OD) 1999-Up.....1.....
72895A.....Snap Ring, 45RFE/68RFE Holds Park Gear To Output Shaft (1.820"OD) (.062" Thick) 1999-Up..1.....4799704
72897A.....Snap Ring, 45RFE (4x4) Holds Bearing In Extension Housing (3.010"OD) (.062" Thick) 1999-Up
.....(Also Fits 45RFE (2WD) Holds Bearing In Extension Housing 1999-Up).....1.....
72897B.....Snap Ring, 45RFE (2WD) Holds Front BEaring In Extension Housing (.093" Thick)(4.130"OD)
.....1999-Up.....1.....
72897C.....Snap Ring, 68RFE Holds Bearing In Extension Housing (3.370"OD)(.096" Thick)(2 Eyelets)
.....2007-Up.....1.....
72897D.....Snap Ring, 68RFE Holds Rear Ball Bearing To Extention Housing (.097"Thick)(3.150"OD)
.....(2 Eyelets)(2WD) 1999-Up.....1.....
72898A.....Snap Ring, 45RFE Front Seal To Pump (3.168"OD) (.062" Thick).....1.....4799082

© Whatever It Takes Transmission Parts. Inc.

PART #	HARD PARTS (Continued)	QTY	REFERENCE #
72899A	Snap Ring, 45RFE/5-45RFE/65/66/68RFE Cover Plate (Outer)(11 15/16")(.061" Thick) 1999-Up	1	4799005
72926A	Spring, 45RFE Accumulator (The Large Outer Spring) 1999-Up	5	
72926B	Spring, 45RFE Accumulator (The Small Inner Spring) 1999-Up	4	4567575
S72950AK	Plate Kit, 45RFE/5-45RFE Accumulator Cover With Screws (Sonnax)(Use With T-44895-TL)	1	4799598AB
72960A	Piston, 45RFE/68RFE Underdrive Clutch (Outer)(Bonded)(5 7/8"OD)(2 1/4"ID)(Balanced Piston) 1999-Up (Also Fits 66RFE 2012-Up)(Also Fits 65RFE 2007-Up)	1	4799652
72960AK	Piston Kit, 45RFE/5-45RFE (Bonded)(3 Pieces) 1995-E05	1	
72960AAK	Piston Kit, 45RFE/5-45RFE/66RFE (Bonded)(5 Pieces) 2004-Up	1	
72960CK	Piston Kit, 66/68RFE (Bonded)(5 Pieces)(Black Pistons) 2007-Up	1	
72961A	Piston, 45RFE/68RFE Overdrive/Reverse (7 7/8"OD) 4 Notches (Cast #4799676) 1999-Up	1	4799645
S72961AK	Overdrive Clutch Housing Kit, 45RFE/5-45RFE/65RFE/66RFE/68RFE (Includes: Overdrive/Reverse Housing, Bolt On Anchor Plate, 2 Anchor Plate Shims, Underdrive/Overdrive Reaction Plate, Adapter Sleeve, Lip Seal, 6 Frictions, 5 Steels, 12 Screws & Chisel)(Sonnax)	1	
72962A	Piston, 45RFE 2nd Clutch Aluminum (1.190" Thick) (Cast #4799519) 18 Notches (7 15/16"OD)	1	
72962AA	Piston, 45RFE/5-45RFE 2nd Clutch (Bonded)(1.170" Thick)(18 Notches) 2005-Up (Also FIts 66RFE 2012-Up)(Also Fits 65RFE 2007-Up)	1	
72962C	Piston, 68RFE 2nd Clutch (Bonded)(.945" Thick)(12 Notches) 2007-Up	1	
72967A	Piston, 45RFE Low/Reverse Clutch (Aluminum) (6 7/8"OD) (Cast #4799639) 1999-05	1	4799457
72967C	Piston, 45RFE/68RFE Low/Reverse Clutch (Bonded)(1.020" Thick)(6 7/8"OD)(2.570"ID) (Cast # 52119505AA) 2006-Up (Retro Fits To 1999)(Black Piston)(Also Fits 66RFE 2012-Up)	1	
72968A	Piston, 45RFE 4th Clutch (Aluminum) (5 7/16"OD) (Cast #4799524) 1999-05	1	
72968C	Piston, 45RFE/68RFE 2-4 Clutch (Bonded) (.650" Thick) 2006-Up	1	
72970A	Return Spring, 45RFE/68RFE Underdrive/Overdrive Clutch (20 Spring Retainer)(4 1/4"OD) 1999-Up	1	4799101
72971A	Spring, 45RFE (.068" Thick)(5.588"OD)(Dished)(8 Fingers) 1999-Up	1	4799087
72971C	Spring, 68RFE (.072" Thick)(5.888"OD)(Dished)(14 Fingers) 2007-Up	1	
72977A	Dished Spring, 45RFE Low/Reverse Clutch Return (8 Fingers)(.088" Thick)(5.915"OD)	1	5179008AA
72977AA	Dished Spring, 45RFE Low/Reverse Clutch Return (8 Fingers)(.068" Thick)(5.580"OD)	1	
72977C	Dished Spring, 68RFE Low/Reverse Clutch Return (8 Fingers)(.090" Thick)(6 3/16"OD) 2007-Up	1	
72978A	Springs & Retainer, 45RFE/68RFE 4th Clutch (3 3/8"OD) (22 Springs) 1999-Up	1	4799527
72980A	Piston, 45RFE/68RFE Underdrive Clutch (Inner) Bonded (6 1/8"OD)(2 3/4"ID) 1999-Up (Black Piston)(Also Fits 66RFE 2012-Up)(Also Fits 65RFE 2007-Up)	1	4799650
72987A	Clip Set, 45RFE/68RFE Holds Low/Reverse Spring In (.136" Thick) Stepped (2 Pieces) 1999-Up	1	5013091AA
72991-2	Detent, 45RFE Roller (Spring Loaded) (1 Bolt)	1	
72991-3	Detent Plate, 45RFE With Built In Range Sensor & Rooster Comb 1999-Up	1	
72991-3C	Cam Plate/Rooster Comb, 68RFE W/Built In Range Sensor 2007-Up	1	
72991A	Linkage Assembly, 45RFE Internal (5 Pieces)	1	
72992A	Lever, 45RFE External Linkage (4 1/8" x 1 3/4") Snap On Ball Type 1999-Up	1	
72992C	Lever, 68RFE External Linkage (3 5/8" x 1 1/4") Snap On Ball Type 2007-Up	1	
72995A	Park Pawl Assembly, 45RFE (Pawl Is .470" Thick At Lug)(3 Pieces) 1999-Up	1	
72995C	Park Pawl Assembly, 68RFE (Pawl Is .550" Thick At Lug)(3 Pieces) 2007-Up	1	
72996A	Cooler Fitting, 45RFE Screw In Type	1	
72996C	Cooler Fitting, 68RFE Push-In Type 2007-Up	1	

© Whatever It Takes Transmission Parts. Inc.

REBUILD ESSENTIALS

45RFE, 545RFE, 65RFE, 66RFE, 68RFE

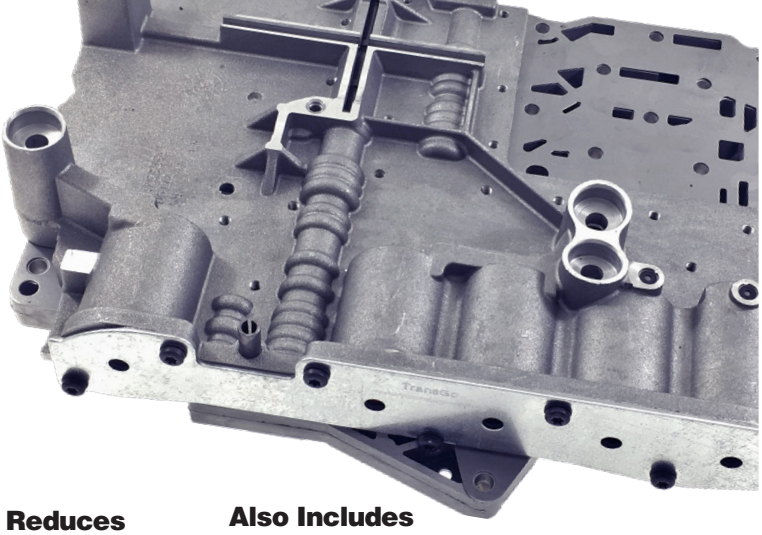

Valve Body Repair Kit

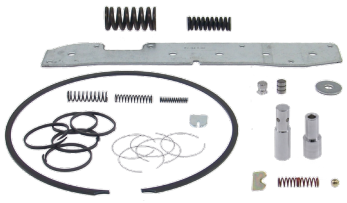

Reprogramming Kit

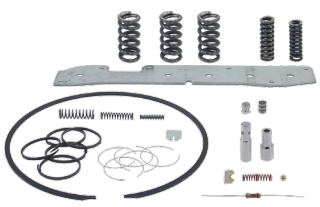

Valve Body Repair Kit #T72165A
Reprogramming Kit #T72169A

Ultimate pump and valve body saver
Requires no reaming, no special tooling, just easy-to-install, drop-in components. Saves both early and late pumps, regardless of the amount of bore wear and allows the use of pump cover with worn TC limit bore.

Corrects, Prevents, Reduces
- Rough lockup
- 2-3 neutral
- Converter drainback
- TCC slide bang and slip codes
- Excessive transmission cooler pressure

Also Includes
- New torque converter limit valve system
- Heavy duty accumulator plate/cover
- Special accumulator seals
- Heavy duty snap ring for input drum
- Pump replacement springs

High Pressure with Towing and High Performance Upgrades

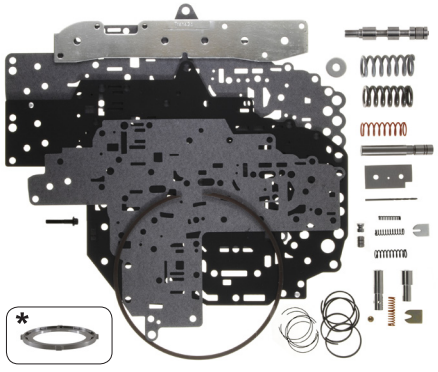

*Internally balanced calibrations provide progressive, seamless clutch apply pressure increases to 210psi max, **a 30 percent increase over the OEM 160psi max**!*

High-pressure Valve Body Repair Kit with Tow/High Performance Upgrades
for use with moderately-tuned engines for performance or towing applications

#T92169AHP 7-checkball (early) VB
#T92169BHP 5-checkball (late) VB

No external PCM transmission tuning or add-on aftermarket electronic enhancements required. Perfect for diesel and HEMI V8.

High pressure with no side effects!
Recalibrated pressure curve mirrors driver throttle position and torque demand delivering shorter, crisper shifts at all throttle openings without the side effects of harsh or erratic shift feel and bind-ups.

Re-engineered converter clutch charge system provides graduated TCC apply pressure increases with a built-in safety relief system to prevent converter ballooning.

Programming is done in the valve body and pump, allowing for the addition of aftermarket engine tunes to increase torque and horsepower without disrupting the vehicle's computer feedback system, triggering trouble codes or overcharging the torque converter.

Corrects, Prevents, Reduces
- All complaints from T72165A

Also Includes
- Recalibrated converter and pressure regulator systems
- Patent-pending robust triple separator plate with gaskets
- Heavy duty accumulator plate
- Heavy duty snap ring for input drum
- Accumulator calibration components

* ***Available separately: Forged steel OD pressure plate for increased clutch capacity (45% overall with kit)***

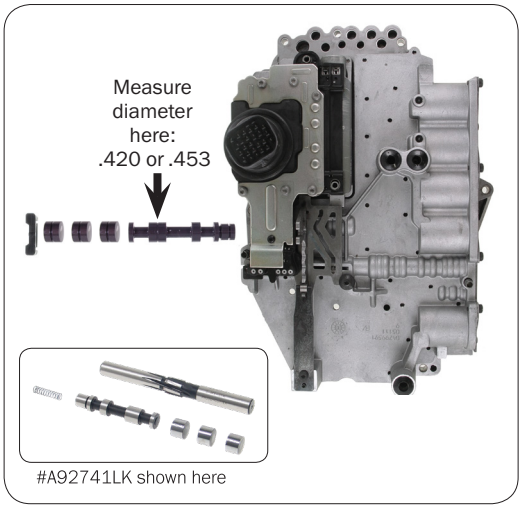

#A92741LK shown here

You won't believe how QUICK and EASY it is to eliminate trouble codes and frequent complaints on these Chrysler units

Solenoid Switch Valve Kits for worn bores or high mileage vehicles

For .420" valve diameter
#A92741LK With tools
#A92741L No tools

For.453" valve diameter
#A92741LAK With tools
#A92741LA No tools

- Dual-piloting reamers, drill-motor-friendly
- Installs in under 5 minutes
- No need to buy valve bodies or expensive tooling
- No holding fixture required
- Save and reuse reaming tools for refill kits

Corrects/Prevents/Reduces:
Multiple codes such as;
- Solenoid switch valve latched in L/R
- Solenoid switch valve latched in TCC
- L/R pressure switch rational or circuit error
- O/D clutch failure
- Kills engine at a stop
- TCC slip
- TCC control stuck off or on

Technical data ©TransGo. All rights reserved. TransGo®, Shift Kit®, SK® and Reprogramming Kit™ are registered and licensed trademarks.

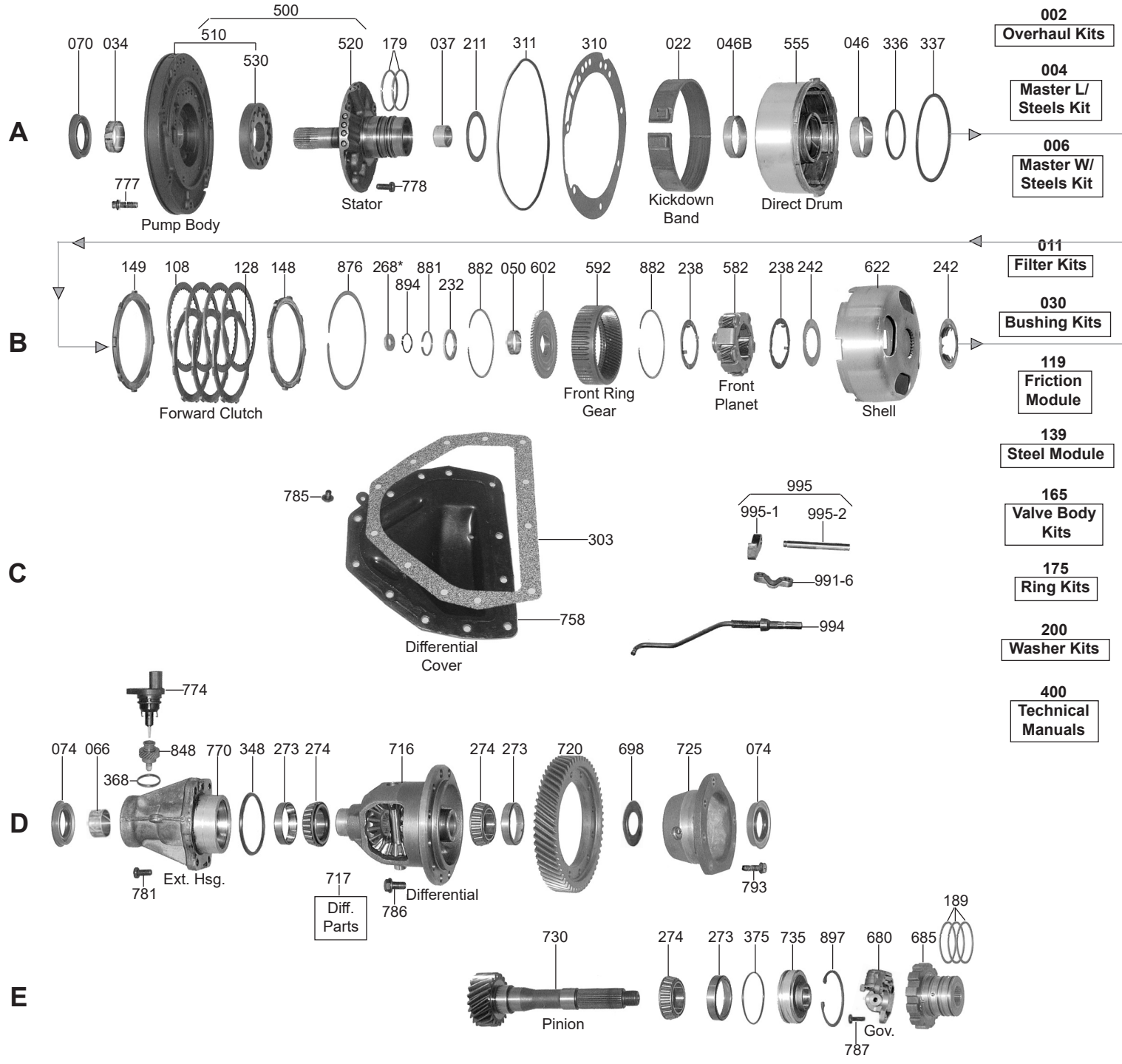

000 P&R Kits

002 Overhaul Kits

004 Master L/ Steels Kit

006 Master W/ Steels Kit

011 Filter Kits

030 Bushing Kits

119 Friction Module

139 Steel Module

165 Valve Body Kits

175 Ring Kits

200 Washer Kits

400 Technical Manuals

© Whatever It Takes Transmission Parts. Inc.

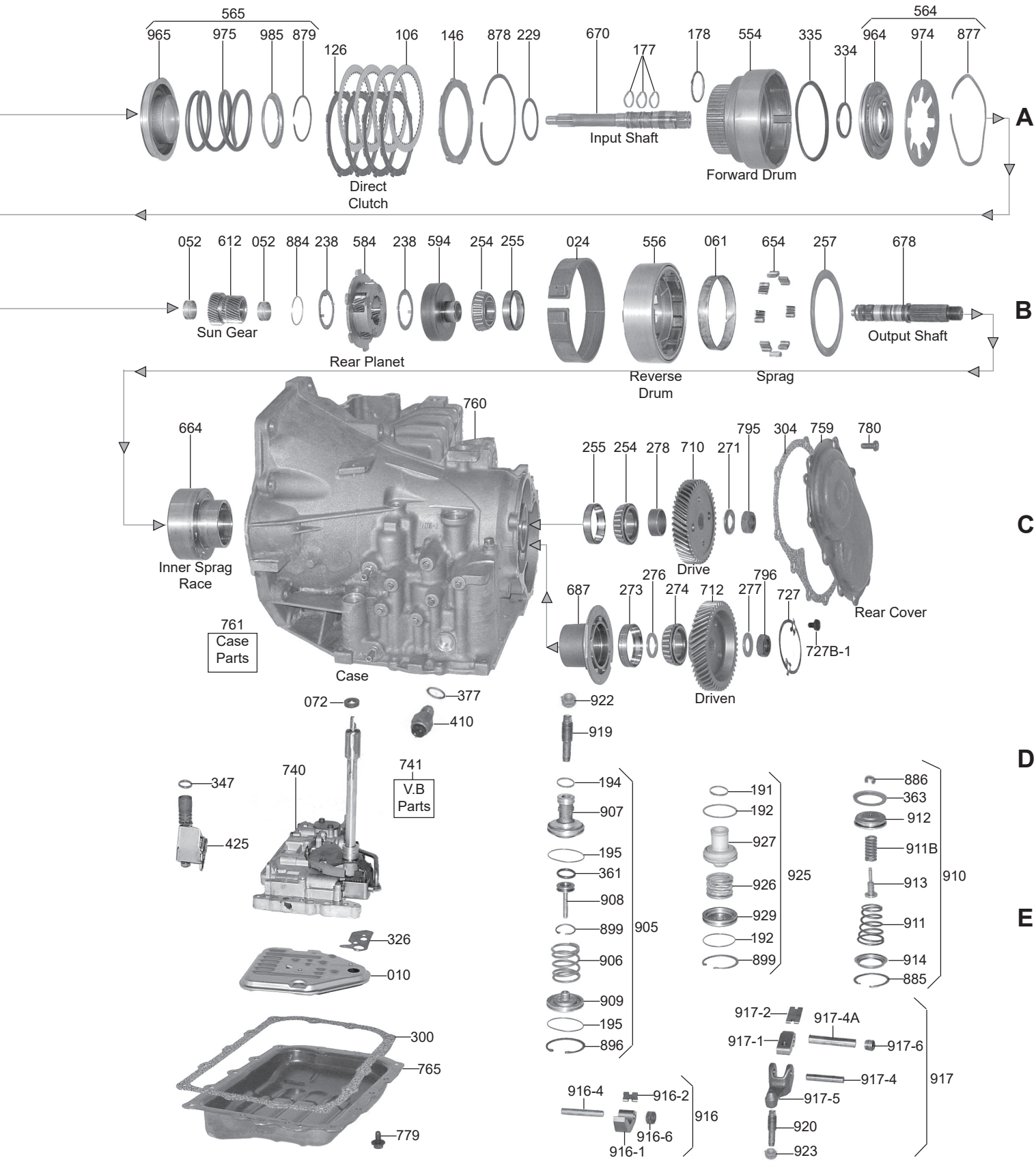

© Whatever It Takes Transmission Parts. Inc.

PART #	PAPER & RUBBER KITS	QTY	REFERENCE #
32000	Paper & Rubber Kit, A404 1978-80	1	
32000A	Paper & Rubber Kit, A413/470/670 1981-Up	1	

PART #	OVERHAUL KITS	QTY	REFERENCE #
32002A	Overhaul Kit, A413/470/670 1978-Up (W/Teflon Rings)	1	
32002AA	Overhaul Kit, A413/470/670 1978-Up (W/Metal Rings)	1	

PART #	MASTER L/STEELS KIT	QTY	REFERENCE #
32004	Master L/Steels, A404 1978-80	1	
32004A	Master L/Steels, A413/470/670 1981-Up (W/Teflon Rings)	1	
32004AA	Master L/Steels, A413/470/670 1981-Up (W/Metal Rings)	1	

PART #	MASTER W/STEELS KIT	QTY	REFERENCE #
32006	Master W/Steels, A404 1978-80	1	
32006A	Master W/Steels, A413/470/670 1981-Up (W/Teflon Rings)	1	
32006AA	Master W/Steels, A413/470/670 1981-Up (W/Metal Rings)	1	

PART #	FILTERS	QTY	REFERENCE #
32010	Filter, A404/413 (Felt) 1978-82	1	5212145
32010A	Filter, A404/413/470/670 (1/2 Plastic & 1/2 Metal) 1981-Up	1	4269649

PART #	FILTER KITS	QTY	REFERENCE #
32011	Filter Kit, A404/413 (Felt) 1978-82	1	
32011A	Filter Kit, A413/470/670 (Plastic) 1983-Up	1	

PART #	MISCELLANEUOS FILTERS	QTY	REFERENCE #
32014	Screen, A404/413/470/670 (Bolts Under Governor) Flat 3 Bolt	1	5205839
32014A	Screen, A404/413/470/670 (Bolts Under Governor) Flat 3 Bolt	1	

PART #	BANDS	QTY	REFERENCE #
32022	Band, A404/413/470/670 Kickdown (Semi- Flex)	1	5212312
32022A	Band, A670 Kickdown (Semi-Flex)	1	
32024	Band, A404/413/470/670 Reverse	1	5205765

PART #	BUSHINGS	QTY	REFERENCE #
32030	Bushing Kit, A404/413/470/670	1	
12034	Bushing, A404/413/470/670 Pump Body (Babbit)	1	
12034A	Bushing, A404/413/470/670 Pump Body (Bronze)	1	
12037	Bushing, A404/413/470 Stator 1978-85	1	4058635
32037	Bushing, A413/470/670 Stator (1986-Up)	1	
32046	Bushing, A404/413/470/670 Direct Drum (Rear)	1	5222406
32046B	Bushing, A404/413/470/670 Direct Drum (Front) (Large)	1	5222405
32050	Bushing, A404/413/470/670 Front Ring Gear Hub	1	5205728
32052	Bushing, A404/413/470/670 Sun Gear	2	5205735
32061	Bushing, A404/413/470/670 Rear Band Drum	1	5222137
32066	Bushing, A404/413/470/670 Extension Housing	1	5212223

PART #	METAL CLAD SEALS	QTY	REFERENCE #
12070	Seal, A404/413/470/670 Front (Without Flange)(.363” Thick)	1	4269057
12070A	Seal, A404/413/470/670 Front (With Flange)(.363” Thick)	1	
22072	Seal, A404/413/470/670 Manual Shaft (1/4” Thick) 1966-Up	1	3878447
32074	Seal, A404/413/470/670 (Both Axles)	2	5205591
32074A	Seal, A413/470/670 Axle AWD (Goes In Transfer Case Adapter)	1	4486042
32075	Seal, A404/413 Pinion Shaft	1	5222015
T32076	Seal, A404/413/470/670 For T32275	1	

© Whatever It Takes Transmission Parts. Inc.

PART #	FRICTION CLUTCH	QTY	REFERENCE #
32106	Friction, A404/413/470/670 Direct Clutch (.083") (Waffle) 1978-Up	2-4	5205675
32108	Friction, A404 Forward Clutch (.071)(47 Teeth) 1978-80	2	5222185
32108A	Friction, A413/470/670 Forward Clutch (.071") (49 Teeth) 1981-Up	2-4	5224084
32119	Friction Module, A404 1978-80	1	
32119A	Friction Module, A413/470/670 1981-UP	1	
32119AS1	Friction Module, A413/470/670 1981-Up (Stage 1)	1	

PART #	STEEL CLUTCH	QTY	REFERENCE #
32126	Steel, A404 Forward & Direct Clutch (.065") (4 1/8"ID) 1978-80	4	5205677
32126A	Steel, A413/470/670 Direct Clutch (.101") (4 1/8"ID) 1981-Up	3-4	4207208
32128	Steel, A413/470/670 Forward Clutch (.068") (4 1/4"ID) 1981-Up	2-3	5224073
32139	Steel Module, A404 1978-80	1	
32139A	Steel Module, A413/470/670 1981-Up	1	

PART #	CLUTCH PRESSURE PLATES	QTY	REFERENCE #
32146A	Pressure Plate, A404 Forward & Direct 1978-80	2	5205684
32146B	Pressure Plate, A413/470/670 Direct Clutch (.186") 1981-Up	1	
32146C	Pressure Plate, A413/470/670 Direct Clutch (.207") 1981-Up	1	4207209
32148	Pressure Plate, A413/470/670 Forward Clutch (.197") 1981-Up	1	
32148A	Pressure Plate, A413/470/670 Forward Clutch (.263") 1981-Up	1	4269619
32149	Reaction Plate, A404 Forward Clutch (Beveled) (4 1/4"ID) 1981-Up	1	5205704
32149A	Reaction Plate, A404 Forward Clutch (Beveled) (4 1/8"ID) 1978-81	1	4269618

PART #	VALVE BODY KITS	QTY	REFERENCE #
S32165A	Valve Body Kit, A404/A413/A470/A670 (3 Stages) (Superior)	1	
T32165AA	Valve Body Kit, A470/A670 Lock-Up (With Dirt Diaper Fixes) Transgo	1	

PART #	OIL SEALING RINGS	QTY	REFERENCE #
32175	Ring Kit, A404 (Metal) 1978-80	1	
32175T	Ring Kit, A404 (Teflon) 1978-81	1	
32175A	Ring Kit, A413/470/670 (Metal) 1981-Up	1	
32175AT	Ring Kit, A413/470/670 (Teflon) 1981-Up	1	
12177A	Ring, A404/413 Input Shaft (1.062"OD) (Metal) 1978-85	1-2	1401221
12177AT	Ring, A404/413 Input Shaft (1.062"OD) (Teflon) 1978-86	1-2	4269592
32177B	Ring, A413/470/670 Input Shaft (.940"OD) (Metal) 1986-Up	2-3	4377047
32177BT	Ring, A413/470/670 Input Shaft (.940"OD) (Teflon) 1986-Up	2-3	
32178	Ring, A404/413/470/670 Forward Clutch Drum (1.750"OD) (Metal)	1	5205697
32178T	Ring, A404/413/470/670 Forward Clutch Drum (1.750"OD) (Teflon)	1	
32179	Ring, A404/413/470/670 Stator Support (2.180"OD) (Metal)	2	5212305
32189	Ring, A404/413/470/670 Governor Support (2.122"OD) (Metal)	3	5212092
32189T	Ring, A404/413/470/670 Governor Support (2.122"OD) (Teflon)	3	4269954
32191	Ring, A404/413/470/670 Accumulator (Small) Use 12177A	1	
12192	Ring, A404/413/470/670 Accumulator (Large) 2.000"OD (Metal) 1978-Up	2	1315158
12192T	Ring, A404/413/470/670 Accumulator (Large) 2.000"OD (Teflon) 1978-Up	2	
12194	Ring, A413/470/670 Kickdown Servo (Small) 1.000"OD (Metal) 1981-Up	1	3410374
12194T	Ring, A413/470/670 Kickdown Servo (Small) 1.000"OD (Teflon) 1981-Up	1	
12194A	Ring, A404/413 Kickdown Servo Piston (Small) 1.250"OD (Metal) 1978-80	1	1672287
32195	Ring, A404/413/470/670 Kickdown Servo (Large) 1.898"OD (Metal) 1978-Up	1-2	5212049
12195A	Ring, A404/413/470/670 Kickdown Servo (Large) 2.125"OD (Metal) 1981-Up	1	1636470
32195AT	Ring, A404/413/470/670 Kickdown Servo (Large) 2.125"OD (Teflon) 1981-UP	1	3743014

PART #	WASHERS & BEARINGS	QTY	REFERENCE #
32200	Washer Kit, A404/413/470/670 (Combo) 1978-Up	1	
32211	Washer , A404/413/470/670 Stator To Direct Drum (Fiber)	1	
32229	Washer, A404/413/470/670 Forward Drum To Direct Drum (Fiber)	1	
32232	Washer, A404/413/470/670 Forward Drum To Hub	1	
32238	Washer, A404 Front and Rear Planet (4 Tab) 1978-80	4	
32238A	Washer, A413/470/670 Front Planet (4 Tab) 1981-Up	4	
32238B	Washer, A470/670 Front Planet (5 Tab) 1996-Up	1	4659163
32242	Race, A404 Sun Shell 1978-80 (W/29 Inner Teeth)		25205737
32242A	Race, A413/470/670 Sun Shell (W/3 Inner Teeth) 1981-Up	1	5224236
32254	Cone Bearing, A404/413/470/670 Rear Ring Gear To Case & Drive Gear To Case (1.378"ID) 23 Rollers	2	5224300

© Whatever It Takes Transmission Parts. Inc.

PART #	WASHERS & BEARINGS (Continued)	QTY	REFERENCE #
T32254K	Bearing & Race Kit, A404/413/470/670 Rear Ring Gear To Case & Drive Gear		
	To Case (Teckpak)	2	
32255	Cup Race, A404/413/470/670 Rear Ring Gear To Case & Drive Gear To Case	2	
32257	Washer, A404/413/470/670 Rear Band Drum To Case (Fiber)	1	5205772
32268	Washer, A404/413/470/670 Input Shaft To Output Shaft (.079")	1	
32268A	Washer, A404/413/470/670 Input Shaft To Output Shaft (.085")	1	
32268B	Washer, A404/413/470/670 Input Shaft To Output Shaft (.093")	1	
32271	Washer, A404/413/470/670 Under Output Shaft Nut (Also Fits Pinion Shaft Nut)	1-2	
32273	Cup Race, A404/413/470/670 Differential/Pinion/Driven Transfer Gear	4	4567022
32274	Bearing, A404/413/470/670 Differential/Pinion/Both Transfer Gears (22 Rollers)(1.497"ID)	4	4567025
32274K	Bearing & Race Kit, A404/413/470/670 Differential/Pinion/Both Transfer Gears (22 Rollers)	4	4269688
92274A	Bearing, A404/413/470/670 Differential (19 Roller) (1.625"ID)	1	
T32275	Support Bearing W/Seal, A404/413/470/670 Axle Stabilizer (Teckpak)	1	
32276	Spacer, A404/413/470/670 Under Driven Transfer Gear	1	
S32276K	Shim Kit, A404/413/470/670 (Use W/32276) (.005") (10 Per Kit) Sonnax	1	32539-Z5
32277	Washer, A404/413/470/670 Under Pinion Shaft Nut (Use 32271)	1	
32278A	Spacer, A404 Rear Planet Ring Gear To Drive Gear (.037") 1978-80	1	4207166
S32278K	Shim Kit, A404/413/470/670 (Use W/32278) (.005") (10 Per Kit) Sonnax	1	35539-Z5
32278B	Spacer, A413/470/670 Rear Planet Ring Gear To Drive Transfer Gear (.498") 1981-Up	1	4207162
S92290AK	Shim Kit, A404/413/470/670 Differential Bearing Race (.005")(Fits Small Cup Race 2.480"OD)		
	(10 Per Kit) Sonnax	1	39539-Z5
S92290BK	Shim Kit, A404/413/470/670 Differential Bearing Race (.005")(Fits Large Cup Race 2.880"OD)		
	(10 Per Kit) Sonnax	1	

PART #	GASKETS & RUBBER COMPONENTS	QTY	REFERENCE #
32300	Gasket, A404/413/470/670 Bottom Pan 1978-Up (Cork)	1	5224052
32303	Gasket, A404/413/470/670 Differential Cover 1978-up (Cork)	1	5212276
32304	Gasket, A404/413/470/670 Transfer Gear Cover (Cork)	1	5222142
32304F	Gasket, A404/413/470/670 Transfer Gear Cover (Farpak)	1	
32310	Gasket, A404,413/470/670 Pump	1	5212306
32311	O-Ring, A404,413/470/670 Pump	1	5205660
32326	Gasket, A404/413/470/670 Filter (Fiber Type)	1	3878313
32326A	Gasket, A404/413/470/670 Filter (Foam Type)	1	4269671
32334	Lip Seal, A404/413/470/670 Forward Clutch Piston (Inner)	1	5212373
32335	Lip Seal, A404/413/470/670 Forward Clutch Piston (Outer)	1	5205701
32336	Lip Seal, A404/413/470/670 Direct Clutch Piston (Inner)	1	5205670
12337	Lip Seal, A413/470/670 Direct Piston (Outer) 1981-Up	1	
32337	Lip Seal, A404 Direct Clutch Piston (Outer) 1978-80	1	5205671
32348	O-ring, A404/413/470/670 Extension Housing 1978-Up	1	6500111
12349	Seal, A404/413/470/670 Throttle Lever Shaft	1	2466548
32363	Lip Seal, A404/413/470/670 Reverse Servo (Viton) 1978-Up	1	
32368	O-Ring, A404/413/470/670 Speed-O Adapter 1978-Up	1	5212152
44371A	O-Ring, A404/413/470/670 Filler Tube	1	6264902
32375	O-Ring, A404/413/470/670 Pinion Bearing Retainer 1978-Up	1-2	6500169

PART #	TECHNICAL MANUALS	QTY	REFERENCE #
32400C	Technical Manual, A404/413/470/670	1	83-670TM

PART #	ELECTRICAL COMPONENTS	QTY	REFERENCE #
12410	Neutral Switch, A404/413/470/670 (Long)	1	
12410A	Neutral Switch, A404/413/470/670 (Short)	1	3747361
32425	Solenoid, A413/670 TCC (Lock-Up) 1993-98	1	4377005

PART #	MISC. COMPONENTS	QTY	REFERENCE #
S22487	E-Clip, A404/413/470/670 Shift Linkage	1	
32490A	Vent, A413/470/670 Case 1995-Up	1	

PART #	HARD PARTS	QTY	REFERENCE #
32500	Pump, A404/413/470 (1 Ring On Input Shaft) 1978-85	1	
32500A	Pump, A413/470/670 (2 or 3 Rings On Input Shaft) 1986-Up (Body Has Inner Gear With		
	25 Teeth & 2 Flats For Converter Hub)	1	
32500B	Pump, A413/A470/A670 (2 Or 3 Rings On Input Shaft) 1986-Up (Body Has Inner Gear		
	With 12 Teeth & 2 Flats For Converter Hub)	1	

© Whatever It Takes Transmission Parts. Inc.

32510	Pump Body, A404/413/470 (W/2 Lugs On Inner Gear) 1978-85	1	5224036
32510A	Pump Body, A413/470/670 (W/2 Flats On Inner Gear) 1986-Up (25 Teeth On Inner Gear)	1	4377996
32510B	Pump Body, A413/470/670 (W/2 Flats On Inner Gear) 1986-Up (12 Teeth On Inner Gear)	1	
32520	Stator, A404/413/470 (1 Ring On Input Shaft) 1978-85	1	5222412
32520A	Stator, A413/470/670 (2 or 3 Rings On Input Shaft) 1986-Up (Fits Body With Inner Gear With 25 Teeth & 2 Flats For Converter Hub)	1	4377120
32520B	Stator, A413/A470/A670 (2 Or 3 Rings On Input Shaft) 1986-Up (Fits Body With Inner Gear With 12 Teeth & 2 Flats For Converter Hub)	1	

PART #	PUMP COMPONENTS	QTY	REFERENCE #
32530A	Pump Gear Set, A404/413/470 (.591") W/Lugs 1978-85	1	
32530B	Pump Gear Set, A413/470/670 (.589") W/Milled Flats 1986-Up	1	
32530BA	Pump Gear Set, A413/470/670 (.591") W/Milled Flats 1986-Up	1	

PART #	HARD PARTS (Continued)	QTY	REFERENCE #
32554	Drum, A404 Forward Clutch (3 Clutch) 1978-80	1	5212320
32554A	Drum, A413/470 Forward Clutch (3 Clutch) 1981-E86	1	
32554B	Drum, A413/470 Forward Clutch (4 Clutch) 1981-E86	1	
32554C	Drum, A413/470 Forward Clutch (3 Clutch) L1986-Up	1	
32554D	Drum, A670 Forward Clutch (4 Clutch) L1986-Up	1	4248916
32555	Drum, A404 Direct Clutch 1978-81	1	5269510
32555A	Drum, A413/470 Direct Clutch 1982-85	1	5224316
32555B	Drum, A670 Direct Clutch (4 Clutch) L1986-Up	1	
32555C	Drum, A413/470 Direct Clutch (3 Clutch) L1986-Up	1	
32556	Drum, A404 Low/Reverse (Band Drum) 1978-80	1	
32556A	Drum, A413/470/670 Low/Reverse (Band Drum) 1981-Up	1	4207117
32564	Piston Kit, A404/413/470/670 Forward Clutch 1978-Up	1	5205684
32565	Piston Kit, A404/413/470/670 Direct Clutch 1978-Up	1	5205704
32582	Planet, A404 Front (29 Teeth Sun Gear) 1978-81	1	4567210
32582A	Planet, A413/470/670 Front (4 Gear) (36 Teeth Sun Gear) 1981-95	1	4269941
32582B	Planet, A670 Front (5 Gear) (36 Teeth Sun Gear) 1996-Up	1	4348900
32583A	Planet Kit, A413/470/670 1981-95 (Contains: # 894/881/232/882/602/592/882/238/582/242/622/612/884/584/254/678)	1	
32584	Planet, A404/413/470/670 Rear (4 Gear) (Square Housing) 1978-95	1	5205740
32584B	Planet, A670 Rear (4 Gear) (Round Housing) 1996-Up (Can Use 32584)	1	
32592	Ring Gear, A404 Front (Annulus) 1978-80	1	5212201
32592A	Ring Gear, A413/470/670 Front (Annulus) 1981-Up	1	5224310
32594	Ring Gear, A404/413/470/670 Rear (Annulus) (Washer Type) 1978-95	1	5222047
32594B	Ring Gear, A670 Rear (Annulus) 1996-Up	1	
32602	Hub, A404 Front Ring Gear 1978-81	1	5212203
32602A	Hub, A413/470/670 Front Ring Gear 1981-Up	1	5224070
32612	Sun Gear, A404 (29 Teeth / 29 Teeth) 1978-80	1	5205733
32612A	Sun Gear, A413/470/670 (29 Teeth / 36 Teeth) 1981-Up	1	5224192
32622	Shell, A404 1978-80	1	7207195
32622A	Shell, A413/470/670 1981-Up	1	
32654K	Sprag Kit, A404/413/470/670 Spring & Rollers	1	4186886
32664	Inner Race, A404 Rear Sprag (Bolt In Replacement) 1978-80	1	
32664A	Inner Race, A413/470/670 Rear Sprag (Bolt-In) 1981-Up	1	
32670	Shaft, A404/413/470 Input (23 Splines) (1 Ring) 1978-85	1	5222400
32670A	Shaft, A413/470 Input (23 Splines) (2 Ring) 1986	1	4377106
32670B	Shaft, A413/470/670 Input (22 Splines) (3 Ring) 1987-Up (Lock-Up)	1	4348397
32678	Shaft, A404 Output (6 1/4" Long) 1978-80	1	5222401
32678A	Shaft, A413/470/670 Output (6 1/2" Long) 1981-Up	1	4348932
32680	Governor, A404/413/470/670	1	4207055
S32681AK	Spring & Bracket, A413/470/670 Governor (Sonnax)	1	
106681A-3	Spring, 404/413/470/670 Governor	1	
32685	Support, A404/413/470/670 Governor (1/2" Thick Lugs) 1978-Up	1	5212249
32685A	Support, A404/413/670 Governor (5/8" Thick Lugs) 1978-Up	1	
32687	Retainer, A404/413/470/670 Governor Support 1978-Up	1	5212371
32698A	Oil Baffle, A404/413/470/670 Inside Differential Retainer	1	5222256
32698B	Oil Baffle, A404/413/470/670 Inside Extension Housing	1	4567494
32710	Gear, A404/413/470/670 Output (49 Teeth) 1978-Up	1	4131048
32710A	Gear, A404/413/470/670 Output (57 Teeth) 1978-Up	1	4186889
32710B	Gear, A404/413/470/670 Output (56 Teeth) 1978-Up	1	4205871
32710C	Gear, A404/413/470/670 Output (53 Teeth) 1978-Up	1	4186871
32710D	Gear, A404/413/470/670 Output (45 Teeth) 1978-Up	1	
32712	Gear, A404/413/470/670 Transfer Driven (60 Teeth) 1978-Up	1	4131048
32712A	Gear, A404/413/470/670 Transfer Driven (52 Teeth) 1978-Up	1	
32712B	Gear, A404/413/470/670 Transfer Driven (56 Teeth) 1978-Up	1	

© Whatever It Takes Transmission Parts. Inc.

PART #	HARD PARTS (Continued)	QTY	REFERENCE #
32712C	Gear, A404/413/470/670 Transfer Driven (54 Teeth) 1978-Up	1	
32712D	Gear, A404/413/470/670 Transfer Driven (47 Teeth) 1978-Up	1	
32716	Differential Housing, A404/413 W/Out Ring Gear (8 Bolt) 1978-82 (Axle Gear Washers Are Round W/Out Tab)Can Use 32716A	1	4186888
32716A	Differential Housing, A404/413/470 W/Out Ring Gear (8 Bolt) 1981-E87 (Washers Under Axle Gears Have 1 Tab)	1	4269768
32716B	Differential Housing, A413/470/670 W/Out Ring Gear (12 Bolt) L1987-Up (W/22 Roller Bearing Both Sides) Axle Does Not Use A Snap Ring To Hold It To The Differential	1	
32716BA	Differential Housing, A413/470/670 W/Out Ring Gear (12 Bolt) L1987-Up (W/19 Roller Bearing On Ring Gear Side) Axle Does Not Use A Snap Ring To Hold It To The Differential	1	
32716BB	Differential Housing, A413/470/670 W/Out Ring Gear (12 Bolt) (W/19 Roller Bearing On Ring Gear Side) Axle Uses A Snap Ring To Hold It To The Differential	1	
32716BC	Differential Housing, A413/470/670 W/Out Ring Gear (12 Bolt) (W/22 Roller Bearing On Both Sides) Axle Uses A Snap Ring To Hold It To The Differential	1 1	
32716BD	Differential Housing, A413/470/670 W/Out Ring Gear (12 Bolt) With 22 Roller Bearing On Housing Side, 19 Roller Bearing On Ring Gear Side (Axle Uses A Snap ring To Hold It To The Differential) Cross Pin Is Held In By 2 Brackets		

PART #	DIFFERENTIAL COMPONENTS	QTY	REFERENCE #
32717A-6	Spider Gear, A404/413/470 Differential 1981-E87	1	4412050
32717A-7	Shim, A404/413/470/670 Differential Spider Gear	1	4412521
32717A-9	Side Gear, A404/413/470 Differential 1981-E87	1	4412048
32717A-10K	Shim Kit, A404/413/470/670 Differential Side Gear	1	4504568
32716B-6	Spider Gear, A670 Differential L1987-Up	1	4659502
32717B-9	Side Gear, A670 Differential L1987-Up	1	4348679
32717AK	Gear Kit, A404/413/470 (8 Bolt) Side & Spider Gears W/Washers & Pins 1981-E87	1	
32717BK	Gear Kit, A670 (12 Bolt) Side & Spider Gears W/Washers & Pins L1987-Up	1	

PART #	HARD PARTS (Continued)	QTY	REFERENCE #
32720	Ring Gear, A404/413/470 Differential (54 Teeth) (8 Bolt) (No Groove)	1	
32720A	Ring Gear, A404/413/470 Differential (55 Teeth) (8 Bolt) (No Groove)	1	
32720B	Ring Gear, A404/413/470 Differential (55 Teeth) (8 Bolt) (2 Groove)	1	
32720C	Ring Gear, A404/413/470 Differential (61 Teeth) (8 Bolt) (1 Groove)	1	
32720D	Ring Gear, A404/413/470 Differential (61 Teeth) (8 Bolt) (3 Groove)	1	
32720E	Ring Gear, A404/413/470 Differential (61 Teeth) (8 Bolt) (2 Groove)	1	
32720F	Ring Gear, A404/413/470 Differential (60 Teeth) (8 Bolt) (3 Narrow Groove)	1	
32720G	Ring Gear, A404/413/470 Differential (60 Teeth) (8 Bolt) (2 Narrow & 1 Wide Groove)	1	
32720H	Ring Gear, A404/413/470 Differential (60 Teeth) (8 Bolt) (4 Groove)	1	
32720HA	Ring Gear, A404/413/470 Differential (60 Teeth) (8 Bolt) (6 Groove)	1	
32720J	Ring Gear, A670 Differential (60 Teeth) (12 Bolt) (No Groove)	1	
32720JA	Ring Gear, A670 Differential (60 Teeth) (12 Bolt) (2 Groove)	1	
32720K	Ring Gear, A670 Differential (61 Teeth) (12 Bolt) (1 Groove)	1	
32720L	Ring Gear, A670 Differential (61 Teeth) (12 Bolt) (3 Groove)	1	
32725	Retainer, A404/413/470 Differential (Aluminum)	1	4205855
32725A	Retainer, A404/413/470 Differential (Steel) (3 3/4" Tall)	1	
32725B	Retainer, A670 Differential (For 12 Bolt Differential W/22 Roller Bearing On Ring Gear Side)	1	
32725BA	Retainer, A670 Differential (For 12 Bolt Differential W/19 Roller Bearing On Ring Gear Side)	1	
32727A	Retainer, A404/413/470/670 Transfer Gear Nut (Keeps Nut From Backing Off) (Goes With 32727B)	1	
32727B	Plate, A404/413/470/670 Transfer Gear Retainer (This Plate Goes With 32727A)	1	
32730	Pinion, A404/413/470/670 (18 Teeth) (No Groove)	1	
32730A	Pinion, A404/413/470/670 (18 Teeth) (1 Groove)	1	
32730B	Pinion, A404/413/470/670 (18 Teeth) (2 Groove)	1	
32730C	Pinion, A404/413/470/670 (19 Teeth) (No Groove)	1	
32730D	Pinion, A404/413/470/670 (19 Teeth) (1 Groove)	1	
32730E	Pinion, A404/413/470/670 (20 Teeth) (No Groove)	1	
32730F	Pinion, A404/413/470/670 (20 Teeth) (1 Groove)	1	
32730G	Pinion, A404/413/470/670 (20 Teeth) (2 Groove)	1	
32730H	Pinion, A404/413/470/670 (20 Teeth) (3 Groove)	1	
32730HA	Pinion, A404/413/470/670 (20 Teeth) (4 Groove)	1	
32730J	Pinion, A404/413/470/670 (21 Teeth) (No Groove) (2.850"OD Gear)	1	
32730JK	Ring & Pinion, (21 Teeth & 60 Teeth) (No Groove) (2.800"OD Pinion Gear) (12 Bolt Ring Gear)	1	
32730JA	Pinion, A404/413/470/670 (21 Teeth) (No Groove) (2.800"OD Gear)	1	

© Whatever It Takes Transmission Parts. Inc.

32730JAK	Ring & Pinion, (21 Teeth & 60 Teeth) (No Groove) (2.850"OD Pinion Gear) (12 Bolt Ring Gear)	1	
32730K	Pinion, A404/413/470/670 (21 Teeth) (3 Narrow Grooves)	1	
32730L	Pinion, A404/413/470/670 (21 Teeth) (2 Narrow & 1 Wide Grooves)	1	
32730LK	Ring & Pinion, (21 Teeth Pinion) (60 Teeth / 8 Bolt Ring Gear)	1	
32730M	Pinion, A404/413/470/670 (21 Teeth) (4 Groove)	1	
32730N	Pinion, A404/413/470/670 (21 Teeth) (6 Groove)	1	
32735	Retainer, A404/413 Pinion (Aluminum) Seal Type 1978-82	1	4269688
32735A	Retainer, A413/470/670 Pinion (Aluminum) No Seal Type 1983-Up	1	4269688
32740	Valve Body, A404/413/470 Non Lock-Up 1978-87	1	
32740A	Valve Body, A413/470/670 Lock-Up (W/Solenoid) (No Tubes) 1987-Up	1	
32740B	Valve Body, A413/470/670 Lock-Up (W/Solenoid) (W/3 Tubes) 1998-Up	1	

PART #	VALVE BODY COMPONENTS	QTY	REFERENCE #
A12741A-5	Check Ball, Chrysler (All) (11/32"OD) (Torlon)	AR	
S32741NOSK	Throttle Valve Kit, A404/413/470/670 (Oversize) (Sonnax) (Valve, Sleeve, Plunger, Spring, 3 Shims) Use T-F-22771-TL)	1	
T-F-22771-TL	Reamer, For S32741NOSK	1	

PART #	HARD PARTS (Continued)	QTY	REFERENCE #
32758	Differential Cover, A404/413 W/Plug 1978-82	1	4269631
32758A	Differential Cover, A413/470/670 W/Out Plug 1982-Up	1	4471574
32759	Rear Cover, A404/413/670 Transfer Gear 1978-85 (Is Flat On Back)	1	4295929
32759A	Rear Cover, A413/470/670 Transfer Gear 1986-94 (Has 1 Raised Hump Where The Output Shaft Nut Rides)	1	4471572
32759B	Rear Cover, A470/670 Transfer Gear 1995-Up (Has 2 Stepped Hump Where The Output Shaft Rides)	1	
32760	Case, A404 (1.7 Liter) Non Lock-Up 1978-82	1	5224047
32760A	Case, A470 (2.6 Liter) Non Lock-Up 1980-83	1	5224189
32760B	Case, A413 (2.2 Liter) Non Lock-Up 1979-82	1	4224199
32760C	Case, A404 (1.7 Liter) Non Lock-Up L1982-Up	1	
32760D	Case, A413 (1.6 Liter) Non Lock-Up 1983-Up	1	4269996
32760E	Case, A413 (2.2/2.5 Liter) Non Lock-Up (W/3 Threaded Starter Holes) 1983-Up	1	
32760EA	Case, A413 (2.2/2.5 Liter) Non Lock-Up (W/1 Threaded Starter Hole) 1983-Up	1	
32760G	Case, A470 (2.6 Liter) Non Lock-Up 1983-Up	1	
32760H	Case, A413 (2.2/2.5 Liter) Lock-Up (W/1 Threaded Starter Hole) 1987-Up	1	
32760J	Case, (2.0/2.4 Liter) (Top Bolts 6") Mitsubishi 1995-99 (W/Vent)	1	
32760JA	Case, (2.0/2.4 Liter) (Top Bolts 6") Mitsubishi 1995-Up (W/Out Vent)	1	
32760JB	Case, (2.0/2.4 Liter) Lock-Up (Top Bolts 6") Mitsubishi 2000-Up (W/ Vent) Has A Threaded Boss At The Same Level As The Shift Lever Seal (Has A Valve Body W/3 Tubes)	1	
32760JC	Case, (2.0/2.4 Liter) Lock-Up (Top Bolts 6") MItsubishi 2000-Up (W/Vent) Has A Threaded Boss At The Same Level As The Shift Lever Seal (Has A Valve Body W/2 Tubes)	1	
32760L	Case, A670 (3.0 Liter) 2WD Lock-Up 1987-94	1	4531126
32760LA	Case, A670 (3.0 Liter) 2WD & 4x4 Lock-Up (W/Vent) 1995-UP (W/Sensor Hole)	1	
32760LAA	Case, A670 (3.0 Liter) 2WD & 4x4 Lock-Up (W/Out Vent) 1995-UP (W/Sensor Hole)	1	
32760LAC	Case, A670 (3.0 Liter) (V-6) 2WD & 4x4 Lock-Up (W/Vent) 1995-Up (W/Sensor Hole) An Early Case Converted To Late	1	
32760LB	Case, A670 (3.0 Liter) (V-6) 2WD & 4x4 Lock-Up 1995-Up (No Sensor Hole)	1	
32761LA	Case Kit, A670 (Converts 1987-94 3.0 Liter To 1995-Up) Case Must Be Machined For Crank Sensor & Filler Tube Hole (Contains: Bracket, Crank Sensor Sleeve, Filler Tube Bracket, Vent & Bolts)	1	
32765	Pan, A404/413 (Shallow) 1978-82	1	5224349
32765A	Pan, A413/470/670 (Deep) 1983-Up	1	4471573
32770	Extension Housing, A404/413 1978-82	1	
32770A	Extension Housing, A413/470/670 1983-Up	1	
32774	Housing, A404/413/470/670 Speed-O	1	
32774B	Housing, A413/470/670 Speed-O (2 Prong) Electric	1	
32774C	Housing, A470/670 Speed-O (3 Round Prongs)	1	
32774D	Housing, A470/670 Speed-O (3 Flat Prongs)	1	
32775	Bolt, A404/413/470/670 Flex Plate To Converter	1	
32779K	Bolt Set, A404/413/470/670 Bottom Pan	1	
32787K	Bolt Set, A404/413/470/670 Holds Governor To Support	1	
32795	Nut, A404/413/470/670 Pinion Shaft	1	
32796	Nut, A404/413/470/670 Output Shaft	1	
32842	Clip, A404/413/470/670 Speed-O Housing Retainer	1	
32876	Snap Ring, A404 Holds Forward Clutch Pressure Plate In 1978-80	1	
32876A	Snap Ring, A413/470/670 Holds Forward Pressure Plate In 1981-Up	1	

© Whatever It Takes Transmission Parts. Inc.

PART #	HARD PARTS (Continued)	QTY	REFERENCE #
32877	Snap Ring, A404 Holds Forward Return Spring In 1978-80	1	
32877A	Snap Ring, A413/470/670 Holds Forward Return Spring In 1981-Up	1	
32878	Snap Ring, A404/413/470/670 Holds Direct Pressure Plate In	1	
32879	Snap Ring, A404/413/470/671 Holds Direct Return Spring In	1	
32880	Snap Ring, A404/413/470/672 Holds Input Shaft In Forward Drum	1	
32881	Snap Ring, A404/413/470/673 Holds Front Planet To Hub	1	
32882	Snap Ring, A404/413/470/674 Holds Front Ring Gear To Hub	2	
32884	Snap Ring, A404/413/470/675 Holds Sun Gear To Shell	1	
32894	Snap Ring, A404/413/470/676 Holds Front Planet To Output Shaft	1	
32896	Snap Ring, A404/413/470/677 Holds Kickdown Servo In	1	
32897	Snap Ring, A404/413/470/678 Holds Pinion Retainer In	1	
32899	Snap Ring, A404/413/470/679 Holds Accumulator In	1	
32905	Servo Assembly, A404/413/470/670 Kickdown	1	
32906	Spring, A404/413/470/670 Kickdown Servo	1	
32907	Piston, A404/413/470/670 Kickdown Servo	1	
32909	Retainer, A404/413/470/670 Kickdown Servo	1	
32910	Servo Assembly, A404/413/470/670 Rear	1	
32911	Spring, A404/413/470/670 Rear Servo Return	1	
32912	Piston, A404/413/470/670 Rear Servo	1	
32914	Retainer, A404/413/470/670 Rear Servo Spring	1	
32916-2	Strut, A404/413/470/670 Kickdown Band (1 1/8” Long)	1	
32917-2	Strut, A404/413/470/670 Rear Band Apply (2 3/16” Long)	1	32710-01
32919	Adjustable Bolt, A404/413/470/670 Kickdown Band	1	
32920	Adjustable Bolt, A404/413/470/670 Rear Band	1	
32925	Accumulator Assembly, A404/413/470/670	1	
22926	Spring, A404/A413/A470/A670 Accumulator Return (1.525” Tall)	1	
32926	Spring, A404/A413/A470/A670 Accumulator Return (1.060” Tall)	1	
12927	Piston, A404/413/470/670 Accumulator (Aluminum)	1	
22927	Piston, A404/413/470/670 Accumulator (Plastic)	1	
12927HD	Piston, A404/A413/A470/A670 Accumulator (Aluminum With 4 Rings)	1	
32929	Retainer, A404/413/470/670 Accumulator Spring	1	
32964	Piston, A404/413/470/670 Forward Clutch	1	
32965	Piston, A404/413/470/670 Direct Clutch	1	
32974	Spring, A404/413/470/670 Forward Clutch Return (4.950”OD) (Can Use 12974A)	1	
12974A	Spring, A404/413/470/670 Forward Clutch Return (4.970”OD)	1	
32975	Spring, A404/413/470/670 Direct Clutch Return	1	
32985	Retainer, A404/413/470/670 Direct Clutch Spring	1	
32995	Park Pawl Assembly, A404/413/470/670	1	
32999	Tube Set, A404/413/470/670 Valve Body To Governor Support (Qty 2)	1	

© Whatever It Takes Transmission Parts. Inc.

© Whatever It Takes Transmission Parts. Inc.

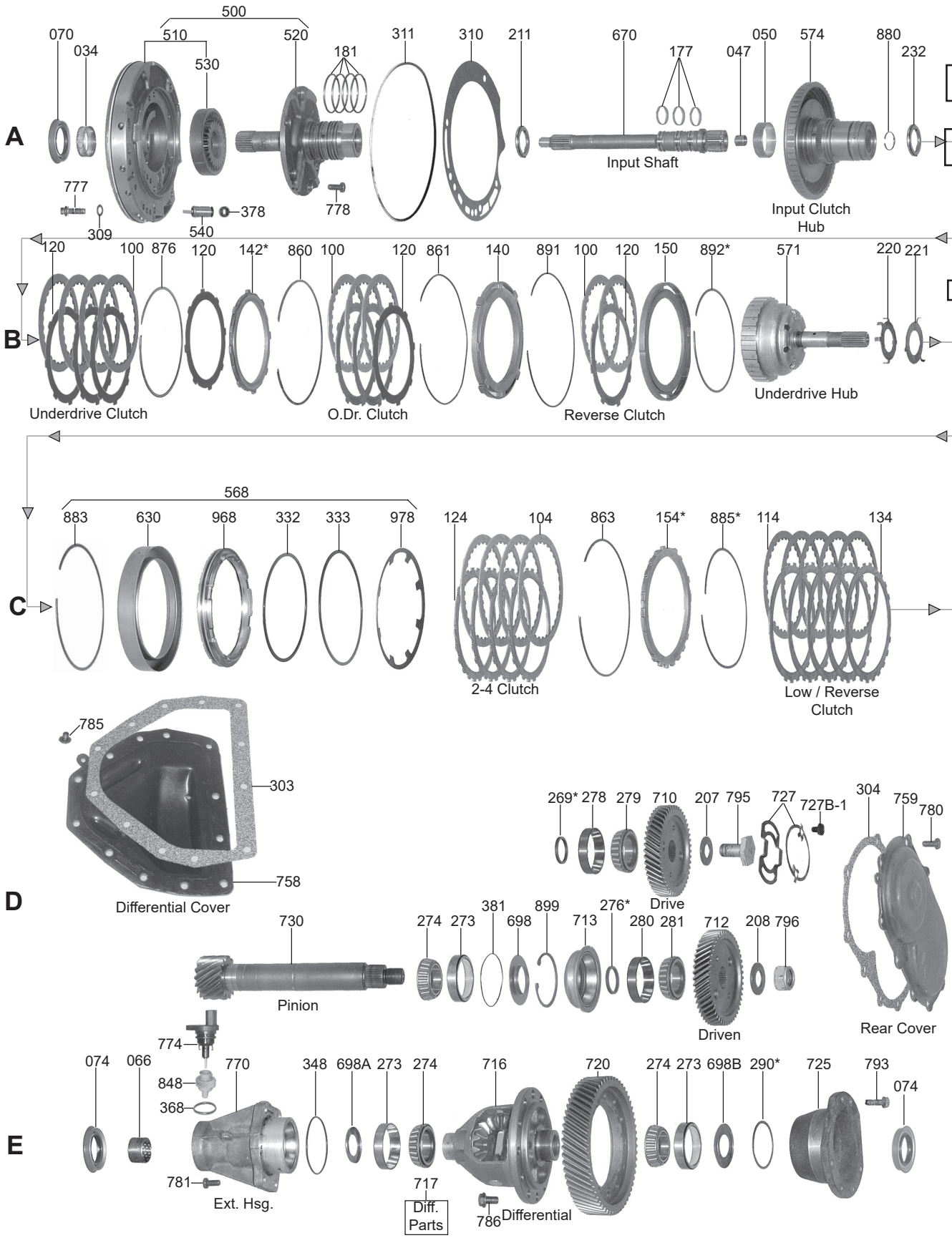

© Whatever It Takes Transmission Parts. Inc.

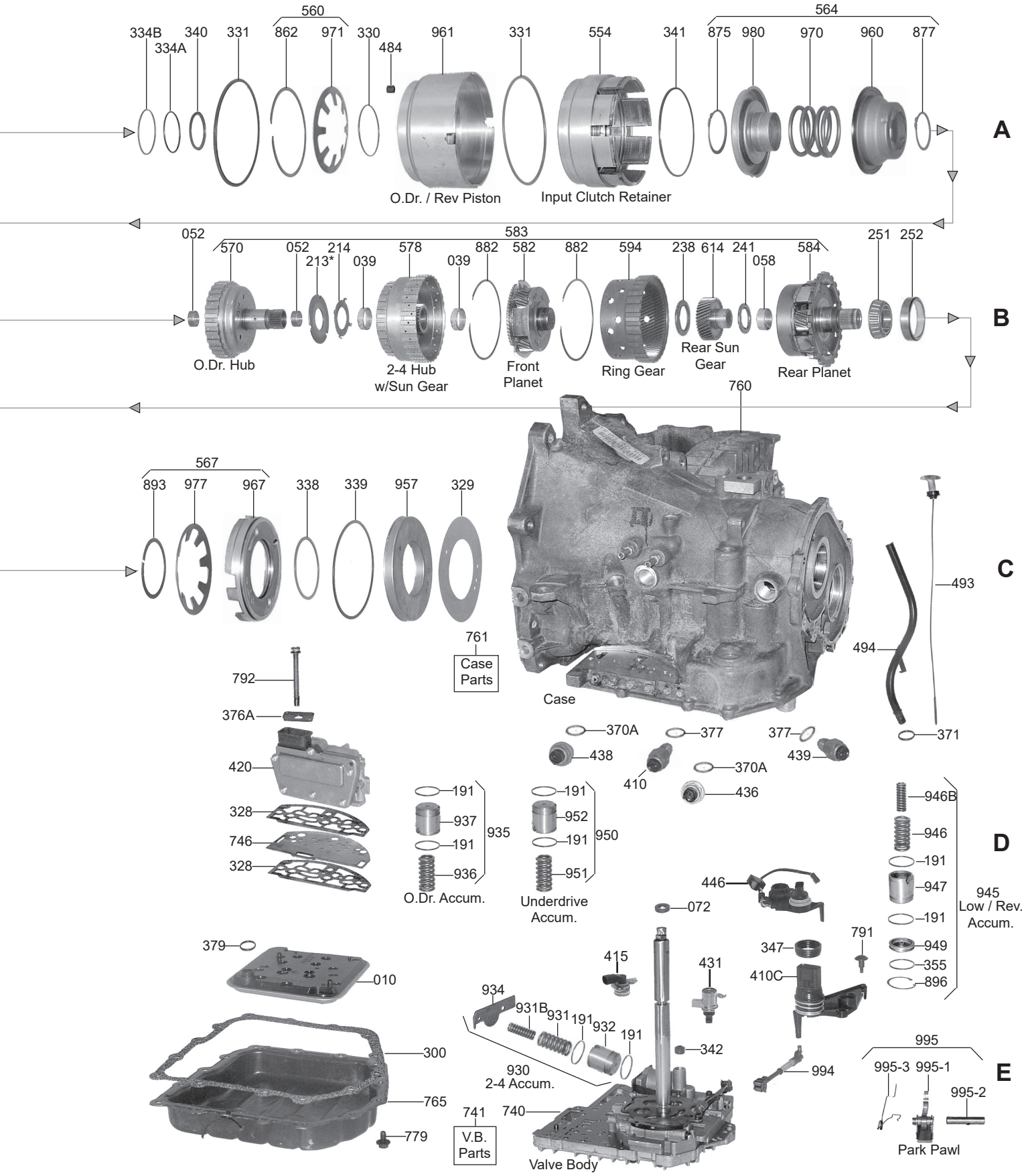

CHRYSLER

© Whatever It Takes Transmission Parts. Inc.

PART #	PAPER & RUBBER KIT	QTY	REFERENCE #
92000	Paper & Rubber Kit, A604 1989-Up	1	

PART #	OVERHAUL KITS	QTY	REFERENCE #
92002	Overhaul Kit, A604 1989-03 (For Bonded Underdrive Piston Sell # 92960)(For AWD Sell Two 32074A Also)	1	4882934
92002A	Overhaul Kit, A604 (For Bonded Pistons Sell # 92960CK For 40TE Or #92960DK For 41TE) (For AWD Sell Two 32074A Also)	1	

PART #	MASTER L/STEEL KIT	QTY	REFERENCE #
92004A	Master L/Steels Kit, A604 1990-03 (For Bonded Underdrive Piston Sell 92960)(For AWD Sell Two 32074A Also)	1	
92004B	Master L/Steels Kit, A604 1990-03 (W/Hi-Energy Frictions) (For Bonded Underdrive Piston Sell #92960)(For AWD Sell Two 32074A Also)	1	4883878
92004C	Master L/Steels Kit, A604 2004-Up (For Bonded Pistons Sell #92960CK For 40TE Or Sell #92960DK For 41TE)(For AWD Sell Two 32074A Also)	1	

PART #	MASTER W/STEEL KIT	QTY	REFERENCE #
92006B	Master W/Steels Kit, A604 1990-03 (W/Hi-Energy Frictions) (For Bonded Underdrive Piston Sell #92960)(For AWD Sell Two 32074A Also)	1	
92006C	Master W/Steels Kit, A604 2004-Up (For Bonded Pistons Sell #92960CK For 40TE Or Sell #92960DK For 41TE)(For AWD Sell Two 32074A Also)	1	

PART #	FILTER	QTY	REFERENCE #
92010	Filter, A604 1989-Up	1	4864505

PART #	FILTER KIT	QTY	REFERENCE #
92011	Filter Kit, A604 1989-Up	1	

PART #	MISC. FILTERS	QTY	REFERENCE #
92015	Screen, A604 Low/Reverse Piston Feed (Orifice) Black	1	3878313
92016	Screen, A604 Solenoid	8	
12018	Screen, A604 Valve Body Regulator Feed	1	

PART #	BUSHINGS	QTY	REFERENCE #
92030	Bushing Kit, A604 1989-95	1	
92030A	Bushing Kit, A604 1996-Up	1	
12034	Bushing, A604 Pump Body (Babbit)	1	2466796
12034A	Bushing, A604 Pump Body (Bronze)	1	
92039	Bushing, A604 2-4 Clutch Hub 1989-95	2	
92039A	Bushing, A604 2-4 Clutch Hub 1996-Up	2	
92047	Bushing, A604 Input Shaft (Rear) (.595"OD) 1989-01	1	4412211
92047A	Bushing, A604 Input Shaft (Rear) (.605"OD) 2001-Up	1	
92047B	Bushing, A604 (40TE/41TE) Stator (Rear)(Bronze) 1989-Up		
92050	Bushing, A604 Input Clutch Hub (Front)	1	4377170
S92050	Bushing, A604 Input Clutch Hub (Front) (Sonnax) (Has Tighter Tolerances Than The OEM) Use Tool # T-92003-TL	1	
T-92003-TL	Bushing Tool, A604 For S92050 (Sonnax)	1	
92052	Bushing, A604 Overdrive Clutch Hub (.365" Tall) 1989-95	2	4412219
92052A	Bushing, A604 Overdrive Clutch Hub (.283" Tall) 1996-Up	2	4659617
S92052E	Bushing, A604 Overdrive Clutch Hub (1 Piece) 1989-95 (Sonnax)	1	92004-SP
S92052EA	Bushing, A604 Overdrive Clutch Hub (1 Piece) (Fits Hub With .937"ID) 1996-Up (Sonnax)	1	92004-L
S92052EB	Bushing, A604 Overdrive Clutch Hub (1 Piece) (Fits Hub With .941"ID) 1996-Up (Sonnax)	1	
92058	Bushing, A604 Rear Planet	1	4412230
32066	Bushing, A604 Extension Housing	1	4269961

PART #	METAL CLAD SEALS	QTY	REFERENCE #
12070	Seal, A604 Front (Without Flange)(.363" Thick)	1	4269057
12070A	Seal, A604 Front (With Flange)(.363" Thick)	1	
92070AA	Seal, A604 Front (W/Flange)(.283" Thick) 2006-Up	1	
92072	Seal, A604 Linkage (Valve Body Stem Seal) Rubber	1	4412836
32074	Seal, A604 Axle (Both Sides)	2	4412522AB

© Whatever It Takes Transmission Parts. Inc.

32074A	Seal, A604 Axle (All Wheel Drive Only)	2	

PART #	FRICTION CLUTCH	QTY	REFERENCE #
92100	Friction, A604 Overdrive Clutch (.086") 1st Design 1989	3	4377137
92100A	Friction, A604 Underdrive & Reverse Clutch (.071") Tan 1989-Up	6	4505629
92100B	Friction, A604 Overdrive Clutch (.073") (Hi-Energy) 1990-Up	4	4531678
A92100BPPK	Friction & Steel Kit, A604, Overdrive Clutch (.073") (Hi-Energy) 1990-Up	1	
92104	Friction, A604 2-4 Clutch (.086") Hi-Energy 1989-Up	4	4377125
92104A	Friction, A604 2-4 Clutch (.086") Tan 1989-91	4	4567212
92114	Friction, A604 Low/Reverse Clutch (.072") Hi-Energy 1989-Up	5	4567573
92114A	Friction, A604 Low/Reverse Clutch (.072") Tan 1989-91	5	4377134
92119A	Friction Module, A604 1990-Up	1	
92119B	Friction Module, A604 Hi-Energy 1990-Up	1	
92119BS1	Friction Module, A604 (Stage 1) 1990-Up	1	

PART #	STEEL CLUTCH	QTY	REFERENCE #
92120	Steel, A604 Overdrive / Underdrive / Reverse Clutch (.068")	5-7	4659053
92120A	Steel, A604 Overdrive Clutch (.098") 1989	2	4377190
92124	Steel, A604 2-4 Clutch (.101") 1989-Up	4	4659054
92134	Steel, A604 Low/Reverse Clutch (.067") 1989-Up	5	4659055
92139	Steel Module, A604	1	

PART #	CLUTCH PRESSURE PLATES	QTY	REFERENCE #
92140	Pressure Plate, A604 Overdrive Clutch (8 Lug) 1989-E90	1	4377191
92140A	Pressure Plate, A604 Overdrive Clutch (4 Lug) L1990-Up	1	4531556
92142A	Pressure Plate, A604 Underdrive Clutch (.215") 1990-96 (Use 92142BK)	1	4723684
92142AK	Pressure Plate Kit, A604 Underdrive Clutch (.215") 1990-Up (With #92860A Snap Ring)	1	
92142B	Pressure Plate, A604 Underdrive Clutch (.235") 1990-Up	1	4723683
92142BK	Pressure Plate Kit, A604 Underdrive Clutch (.235") 1990-Up (With #92860A Snap Ring)	1	5017514AA
92142BA	Pressure Plate, A604 Underdrive Clutch (.245") 1990-Up	1	
92142BAK	Pressure Plate Kit, A604 Underdrive Clutch (.245") 1990-Up (With #92140A & 92860A)	1	
92142C	Pressure Plate, A604 Underdrive Clutch (.255") 1990-Up	1	4723682
92142CK	Pressure Plate Kit, A604 Underdrive Clutch (.255") 1990-Up (With #92860A Snap Ring)	1	5017179AA
92142DK	Pressure Plate Kit, A604 Underdrive Clutch (.275") 1990-Up (With #92860A Snap Ring)	1	
92150A	Pressure Plate, A604 Reverse Clutch (.335" Thick) (At The Edge) 1989-Up	1	4531905
92150B	Pressure Plate, A604 Reverse Clutch (.186" Thick) 1997-Up	1	4531925
92154	Pressure Plate, A604 Low/Reverse Clutch (.210") 1989-Up	1	
92154A	Pressure Plate, A604 Low/Reverse Clutch (.220") 1989-Up	1	
92154B	Pressure Plate, A604 Low/Reverse Clutch (.230") 1989-Up	1	4897452AA
92154C	Pressure Plate, A604 Low/Reverse Clutch (.240") 1989-Up	1	4897453AA
92154D	Pressure Plate, A604 Low/Reverse Clutch (.250") 1989-Up	1	4897454AA
92154EA	Pressure Plate, A604 Low/Reverse Clutch (.268") 1989-Up	1	4567893
92154F	Pressure Plate, A604 Low/Reverse Clutch (.270") 1989-Up	1	4897456AA
92154G	Pressure Plate, A604 Low/Reverse Clutch (.206") 1989-Up	1	4567894

PART #	VALVE BODY KITS	QTY	REFERENCE #
T92165A	Shift Kit, A604/42RLE Fits units with VLP solenoid (TransGo)	1	
T92167	Shift Kit, A604 1989-Up (Transgo)	1	SK® 604
T92169AHP	Reprogramming Kit, 42RFE High Pressure (For 7-Ball valve body) TransGo	1	
T92169BHP	Reprogramming Kit, 42RFE High Pressure (For 5-Ball valve body) TransGo	1	

PART #	OIL SEALING RINGS	QTY	REFERENCE #
92175	Ring Kit, A604 1989-Up (With Selectives) (6 Pieces Total)	1	
92177T	Ring, A604 Input Shaft (1.443"OD) (Teflon) 1989-Up	3	4446543
12179A	Ring, A604 Stator Support (2.062"OD) (Seal Plated) 1989-Up	4	
92181T	Ring, A604 Stator Support (Updated) (2.062"OD) (Teflon) 1989-Up	4	8675729
92181TK	Ring Kit, A604 Stator Support (Updated) (2.062"OD) (Teflon) 1989-Up	1	8675729
92191	Ring, A604 Accumulator (Non Rotating) (1.013"OD) (Graphite) 1989-Up	8	4446544
92191T	Ring, A604 Accumulator (1.013"OD) (Teflon) 1989-Up	8	
92191K	Ring Kit, A604 Accumulator (8 Rings) And Stator (4 Rings)	1	

PART #	WASHERS & BEARINGS	QTY	REFERENCE #
92200	Washer Kit, A604 (With Selectives) (7 Pieces) 1989-Up	1	
92201A	Bearing Kit, A604 1988-Up (Torrington)	1	
92207	Washer, A604 Output Gear (Under Bolt)	1	6501832
92208	Washer, A604 Driven Transfer Gear (Under Nut)	1	6501833

© Whatever It Takes Transmission Parts. Inc.

PART #	WASHERS & BEARINGS (Continued)	QTY	REFERENCE #
92211	Bearing W/Races, A604 Stator To Input Drum (1.713"OD) 1989-Up (Also Fits A604 Rear Sun Gear To Rear Planet 1989-93)	1	4412209
92213	Race, A604 Overdrive Hub To 2-4 Hub (.039") (3 Slot)	1	4431662
92213A	Race, A604 Overdrive Hub To 2.4 Hub (.048") (3 Slot)	1	4431663
92213B	Race, A604 Overdrive Hub To 2.4 Hub (.057") (3 Slot)	1	4431664
92213C	Race, A604 Overdrive Hub To 2.4 Hub (.066") (3 Slot)	1	4431665
92213D	Race, A604 Overdrive Hub To 2.4 Hub (.074") (3 Slot)	1	4431666
92213E	Race, A604 Overdrive Hub To 2.4 Hub (.083") (3 Slot)	1	4431667
92213F	Race, A604 Overdrive Hub To 2.4 Hub (.091") (3 Slot)	1	4431668
92213G	Race, A604 Overdrive Hub To 2.4 Hub (.100") (3 Slot)	1	4431669
92213H	Race, A604 Overdrive Hub To 2.4 Hub (.109") (3 Slot)	1	4446670
92213HA	Race, A604 Overdrive Hub To 2.4 Hub (.117") (3 Slot)	1	4446671
92213J	Race, A604 Overdrive Hub To 2.4 Hub (.126") (3 Slot)	1	4446672
92213JA	Race, A604 Overdrive Hub To 2.4 Hub (.135") (3 Slot)	1	4446601
92214	Washer, A604 Overdrive Hub To 2-4 Hub (4 Tab) (1.263"ID)	1	4412216AB
92220	Washer, A604 Underdrive Hub To Overdrive Hub (5 Tab) (.050" Thick)(1.260"ID)	1	4471855
92220K	Washer Set, A604 Underdrive Hub To Overdrive Hub (Includes: D92220 (5 Tab) & D92221 (3 Tab))	1	5018923AA
92221	Race, A604 Underdrive Hub To Overdrive Hub (3 Tab)(.031" Thick)(1.2663"ID)(Use D92220K)	1	4431973
92232	Bearing, A604 Input Drum To Underdrive Hub (1.790"OD) Also Fits A604 Rear Sun Gear To Rear Planet 1994-Up	1	4467262
92238	Bearing, A604 Front Planet To Rear Sun Gear	1	4412229
92241	Bearing, A604 Rear Sun Gear To Rear Planet 1989-93 (Use 92211)	1	4412209
92241A	Bearing, A604 Rear Sun Gear To Rear Planet 1994-Up (Use 92232)	1	4467262
92251	Bearing, A604 Presses On Rear Planet 1989-UP (use 32274)	1	
92251K	Bearing & Race Kit, A604 Presses On Rear Planet 1989-Up (Use 32274K)	1	
92252	Cup Race, A604 Rear Planet Bearing To Case 1989-Up (use 32273)	1	
92269	Shim, A604 Transfer Gear (.144") Output (Use 92276)	1	6501832
32273	Cup Race, A604 Rear Planet & Differential	1-2	4567022
92273	Cup Race, A604 Pinion (Fits 20 Roller Bearing)	1	4446689
92273A	Cup Race, A604 Differential (Fits 19 Roller Bearing)	1	4659237
92273C	Cup Race, A604 Differential (AWD)(Cast # BT1B329135/Q/CL7C)(Presses Into 92770C Housing)(The # 074 Seal Presses Into The Race)	1	
32274	Bearing, A604 Presses On Rear Planet & Differential (22 Roller Bearing) 1989-Up	1-2	4567025
92274	Bearing, A604 Differential/Pinion (20 Roller) (1.500"ID)	1	4446610
92274A	Bearing, A604 Differential (19 Roller) (1.625"ID)	1	4659238
92274C	Cone Bearing, A604 Differential (24 or 25 Rollers) (1.810"ID) AWD (CAst # LM503349)	1	
32274K	Bearing & Race Kit, A604 Rear Planet & Differential (22 Rollers)	1	
92274K	Bearing & Race Kit, A604 Differential / Pinion (20 Roller) (1.500"ID)	1	4856911
T32275	Support Bearing, A604 Axle Stabilizer (Teckpac)	1	
S92276AK	Shim Kit, A604 (.005") (10 Piece) (Use W/OE Shims) Sonnax	1	92965-Z5
92276B	Shim, A604 Transfer Gear (.144") Output & Pinion	1	6501832
S92276BK	Shim Kit, A604 (.030") (10 Piece) (Use W/OE Shims) Sonnax	1	92965-30
92276C	Shim, A604 Transfer Gear (.148") Output & Pinion	1	
S92276CK	Shim Kit, A604 (.037") (10 Piece) (Use W/OE Shims) Sonnax	1	92965-37
92276D	Shim, A604 Transfer Gear (.152") Output & Pinion	1	
S92276DK	Shim Kit, A604 (.045") (10 Piece) (Use W/OE Shims) Sonnax	1	92965-45
92276E	Shim, A604 Transfer Gear (.158") Output & Pinion	1	
92278	Cup Race, A604 Output Gear Bearing To Case 1989-Up	1	4412234
92279	Cone Bearing, A604 Presses On Output Gear	1	4412235
92280	Cup Race, A604 Driven Transfer Gear To Case	1	4504041
92281	Bearing, A604 Driven Transfer Gear (20 Rollers) (1.625"ID)	1	4504042
92281K	Bearing & Race Kit, A604 Driven Transfer Gear To Case	1	
S92290AK	Shim Kit, A604 Differential Bearing Race (.005")(Fits Small Cup Race 2.480"OD)(10 Per Kit) Sonnax	1	
S92290BK	Shim Kit, A604 Differential Bearing Race (.005")(Fits Small Cup Race 2.880"OD)(10 Per Kit) Sonnax	1	

PART #	GASKETS & RUBBER COMPONENTS	QTY	REFERENCE #
92300	Gasket, A604 Bottom Pan	1	4431997
92303	Gasket, A604 Differential Cover	1	4377169
92304	Gasket, A604 Transfer Gear Cover	1	4377165
92309	Gasket / Washer, A604 Pump Bolt	5	
92310	Gasket, A604 Pump	1	4412844
32311	O-Ring, A604 Pump	1	4659945
92328	Gasket, A604 Solenoid Pack (Takes 2) 1989-98	2	4431798
92328A	Gasket, A604 Solenoid Pack 1999-Up	1	4659982

© Whatever It Takes Transmission Parts. Inc.

92329	Gasket, A604 Low/Reverse Piston Retainer	1	4431649
S92329AK	Gasket / Seal Kit, A604 Low/Reverse Piston Retainer (Sonnax) Steel Gasket W/Rubber Grommet	1	
92330B	O-Ring, A604 Overdrive & Reverse Clutch (Inner) 1989-Up	1	5033158
92331B	Lip Seal, A604 Overdrive/Reverse Clutch (Outer) & Input Clutch Retainer (Outer) 1989-Up	2	4412875
92332A	D-Ring, A604 2nd-4th Clutch (Inner)	1	4659376
92333A	D-Ring, A604 2nd-4th Clutch (Outer)	1	4659374
92334A	O-Ring, A604 Input Clutch Rear (.070") (Green) (Inner) 1989-E90	1	6502270
92334AA	O-Ring, A604 Input Clutch Rear (.103") (Red) (Inner) 1990-Up	1	6502269
92334B	O-Ring, A604 Input Clutch Front (.070") (Orange) (Inner) 1989-E90	1	6502272
92334BA	O-Ring, A604 Input Clutch Front (.103") (Blue) (Inner) L1990-Up	1	6502271
92338A	D-Ring, A604 Low/Reverse Clutch (Inner) 1989-Up	1	4659856
92339A	D-Ring, A604 Low/Reverse Clutch (Outer) 1989-Up	1	4659855
92340	Lip Seal, A604 Underdrive Clutch (Inner) 1989-Up	1	4659391
92341	Lip Seal, A604 Underdrive Clutch (Outer) 1989	1	4377173
92341A	Lip Seal, A604 Underdrive Clutch (Outer) 1990-Up	1	4531408
92342	Seal, A604 2nd-4th Feed (Valve Body To Case)	1	4412291
92347C	Grommet, A604 PRNDL Switch To Case (Thin, 1.350"OD For Case Connector Hole)(Rubber) 1996-98	1	
92347CA	Grommet, A604 PRNDL Switch To Case (Thick, 1.420"OD For Case Connector Hole)(Rubber) 1999-Up	1	
32348	O-Ring, A604 Extension Housing 1989-Up	1	6500111
92355	O-Ring, A604 Low/Reverse Accumulator Cover	1	6501549
92370A	O-Ring, A604 Input Speed Sensor(Small)	1	6501700
92370B	O-Ring, A604 Output Speed Sensor(Large)	1	6501701
44371A	O-Ring, A604 Filler Tube	1	6264902
92376A	Seal, A604 Solenoid Connector To External Wire Harness 1989-Up (Flat, Fits Over The Connector Prongs)	1	
S92376D	Diaphragm, A604 Switch Seal (In Solenoid Pack) (9 Per Pack) Sonnax	1	
S92376DK	Diaphragm Kit, A604 Switch Seal Kit (In Solenoid Pack) (3 Diaphragms, 3 Brass Contacts) Sonnax	1	
92378	O-Ring, A604 Cooler By-Pass Valve	1	
92379	O-Ring, A604 Filter	1	4412844
92381	O-Ring, A604 Transfer Shaft Bearing Retainer	1	6501768

PART #	TECHNICAL MANUALS	QTY	REFERENCE #
92400	Technical Manual, A604 (ATSG)	1	83-604TM
A92400	Rebuild Manual, A604 Rebuild Procedures (ATRA)	1	
92400H	Technical Manual, A604 Handbook 1989-4/91 (Updates).	1	83-604TM-U1
92401	Rebuild CD, A604 Rebuild Procedures (ATRA)	1	
92407A	Technical Manual & Video, A604	1	

PART #	ELECTRICAL COMPONENTS	QTY	REFERENCE #
92410	Switch, A604 Neutral Safety (External) 1989-95	1	4707123
92410C	Switch, A604 Neutral Safety & PRNDL (Internal) 1995-9/98 (Round Pins)	1	4659559-AC
92410CA	Switch, A604 Neutral Safety & PRNDL (Internal) 10/98-Up (Flat Blades)	1	4659676AB
82415A	Switch, A604 Pressure Transducer 2006-Up	1	
R92420	Solenoid Pack, A604 (Shift Control) 1989-98 (Has 6 Screws That Holds On The Tin Solenoid Cover)	1	4504570
92420A	Solenoid Pack, A604 (Shift Control) 1999-Up (Retro Fits) Has 7 Screws That Holds On The Tin Solenoid Cover	1	5015646AB
R92420A	Solenoid Pack, A604 (Shift Control) 199-Up (Has 7 Screws That Hold On The Tin Solenoid Cover)	1	
92424	Repair Kit, A604 Solenoid Pack 1989-98 (92328A Is The Gasket For 1999-Up For This Kit)	1	
92424A	Repair Kit, A604 Solenoid Pack 1999-Up	1	
92431C	Solenoid, A604 EPC 2006-Up	1	
92436	Speed Sensor, A604 Output (.928"OD Threads)	1	4800879
92438	Speed Sensor, A604 Input (.855"OD Threads)	1	4800878
92439	Sensor, A604 Trans Range (PRNDL) (External) 1989-90	1	4439059
92439A	Sensor, A604 Trans Range (PRNDL) (External) 1991-96	1	4671019
92445BK	Repair Kit, A604 Wire Harness (PRNDL / Neutral Switch)	1	4638996
92445CK	Repair Kit, A604 Wire Harness (Input / Output Speed Sensor Connector) (W/Heat Shrinks)	1	4419478
92445DK	Repair Kit, A604 Wire Harness (Solenoid Connector)	1	4419479

© Whatever It Takes Transmission Parts. Inc.

PART #	MISC. COMPONENTS	QTY	REFERENCE #
D92484	Screened Orifice, A604 In Overdrive / Reverse Piston	1	4531903
S92494-2	Shield, A604 Dipstick Tube (Sonnax) Fits Cases With Filler Tubes That Extend Into The Case 1.25” Only	1	
T92498-T2	Grommet, Chrysler Transfer Case Shift Linkage Repair Clip (Fits 2002-13 Dodge, Chrysler & Jeep) (Durable Plastic)	1	

PART #	HARD PARTS	QTY	REFERENCE #
92500	Pump, A604 (25 Teeth Inner Gear)(3 Ring Stator) 1989	1	
92500A	Pump, A604 (25 Teeth Inner Gear)(4 Ring Stator With Cast # 4377161 Or 4567666)(Stator Shaft Length Is 3 7/16” Long) 1990-99 (Uses 92510 & 92520A)	1	4567869AB
92500B	Pump, A604 (12 Teeth Inner Gear)(4 Ring Stator With Cast # 4659715)(Stator Shaft Length Is 3 7/16” Long) 2000-Up (Uses 92510A & 92520B)	1	
92500C	Pump, A604 (12 Teeth Inner Gear)(4 Ring Stator With Cast # 04659715)(Stator Shaft Length Is 2 11/16” Long) 2007-Up (Uses 92510C & 262520A)	1	
92510	Pump Body W/Gears, A604 (25 Teeth Inner Gear) (.708” Thick) 1989-Up (5 Bolts To Case) (With 2 Cutouts In Gasket Area)(Can Use 92510A)	1	
92510A	Pump Body W/Gears, A604 (12 Teeth Inner Gear) (.495” Thick) 2000-Up (5 Bolts To Case) (With 2 Cutouts In Gasket Area)(Uses A Thick Seal # 12070A .363” Thick) (Can Use 92510)	1	
92510C	Pump Body W/Gears, A604 (12 Teeth Inner Gear)(.495” Thick)(5 Bolts To Case)(With 2 Cutouts In Gasket Area)(Uses Thin Seal #92070AA .283” Thick)	1	
92520	Stator, A604 (3 Ring) 1989	1	
92520A	Stator, A604 Pump Cover (4 Ring) 1990-Up (Cast # 4377161 or 4567666)(Shaft Length Is 3 7/16” Long)	1	
92520B	Stator, A604 Pump Cover (4 Ring) 2000-Up (Cast # 4659715)(Shaft Length Is 3 7/16” Long)	1	
262520A	Stator A604 Pump Cover (4 Ring) 2007-Up (CAst # 04659715)(Shaft Length Is 2 11/16” Long)	1	

PART #	PUMP COMPONENTS	QTY	REFERENCE #
92530A	Pump Gears, A604 (25 Teeth Inner Gear) (.708” Thick) 1989-Up	1	
92530B	Pump Gears, A604 (12 Teeth Inner Gear) (.495” Thick) 2000-Up	1	
92540	By-Pass Valve, A604 (In Case Under Pump)	1	4539880
S92540-6	Plug, A604 By-Pass Valve (2 Per Kit) Sonnax	1	
92540A	By-Pass Valve, A604 (Splices Into Cooler Line)	1	5252836

PART #	HARD PARTS (Continued)	QTY	REFERENCE #
92554	Drum, A604 Input Clutch Retainer (W/Bevel) 1989	1	
92554A	Drum, A604 Input Clutch Retainer (W/Out Bevel) 1990-96	1	4505623
92554AK	Drum Kit, A604 Input Clutch Retainer (W/Out Bevel) 1990-96 (Contains: # 860, 876 & (2) # 142)	1	5016198AA
92554B	Drum, A604 Input Clutch Retainer (Cast # 4446635) 1997-Up	1	4659935
92560	Piston Kit, A604 Overdrive/Reverse Clutch (Contains Snap Ring & Spring) 1989	1	
92560A	Piston Kit, A604 Overdrive/Reverse Clutch (Contains Snap Ring & Spring) 1990-Up	1	
92564	Piston Kit, A604 Underdrive Clutch 1989-Up	1	
92567	Piston Kit, A604 Low/Reverse Clutch (Piston/Spring/Snap Ring) 1989-Up	1	
92568	Piston Kit, A604 2-4 Clutch (Contains #630, 968, 978) 1989-03	1	4883078
92568A	Piston Kit, A604 2-4 Clutch (Contains #630A, 968D, 978) (#630 Has A Locking Tab At 6:00 And A Feed Hole At 6:00) 2004-Up	1	
92568C	Piston Kit, A604 2-4 Clutch (Contains: #630, 968C, 978) 2004-Up	1	
92570	Hub, A604 Overdrive & Reverse (1.140”OD Shaft) 1989-95	1	
92570A	Hub, A604 Overdrive & Reverse (1.160”OD Shaft) 1996-Up	1	4659993
92570K	Clutch Hub Kit, A604 Overdrive & Reverse (1.160”OD Shaft)(Contains: 2-4 Hub & Front Planet) 1996-Up (Retro Fits To 1989)	1	4762712AC
92571	Hub, A604 Underdrive Clutch W/Solid Shaft	1	4431615
92574	Hub, A604 Input Clutch (For 3 Ring Stator) 1989	1	
92574A	Hub, A604 Input Clutch (For 4 Ring Stator) 1990-Up	1	
92578	Hub & Sun Gear, A604 2nd-4th Clutch (1.140”OD Bushing) 1989-95	1	4431622
92578A	Hub & Sun Gear, A604 2nd-4th Clutch (1.160”ID Bushing) 1996-Up	1	4659618AB
92582	Planet, A604 Front 1989-95	1	4567539
92582A	Planet, A604 Front (W/Heat Treated Splines) 1996-Up	1	4567539AB
92583	Planet Kit, A604 (Contains: Front Planet, Rear Planet, 2-4 Hub, Sun Gear, Ring Gear) 1989-E91 Rear Planet Is 4 Gear And 1” From Step To End Of Shaft	1	
92583A	Planet Kit, A604 (Contains: Front Planet, Rear Planet, 2-4 Hub, Overdrive Hub, Sun Gear, Ring Gear) L1991-Up (Rear Planet is 4 Gear And 1 1/8” From Step To End Of Shaft) (Can Use 92583B)	1	

© Whatever It Takes Transmission Parts. Inc.

92583B	Planet Kit, A604 (Contains: Front Planet, Rear Planet, 2-4 Hub, Overdrive Hub, Sun Gear, Ring Gear) 1996-Up (Rear Planet is 5 Gear And 1 1/8" From Step To End Of Shaft) (Can Use 92583A)	1	
92584	Planet, A604 Rear (4 Gear) 1989-E91 (1" From Step To End OF Shaft)	1	47627004
92584K	Planet Assembly, A604 Rear (4 Gear) 1989-E91 (1" From Step To End Of Shaft) (Contains: Rear Cover, Transfer Gears, Ring Gear & Miscellaneous)	1	4883348
92584A	Planet, A604 Rear (4 Gear) L1991-Up (1 1/8" From Step To End Of Shaft)	1	4897329
92584B	Planet, A604 Rear (5 Gear) 1996-Up (1 1/8" From Step To End Of Shaft) Can Use 92584A	1	5014200AA
92594	Ring Gear, A604 Rear Planet	1	4799794
92614	Sun Gear, A604 Rear Planet	1	4377080
92630	Retainer, A604 2-4 Clutch Piston (.956" Thickc)(Steel) 1989-Up (With Locking Tabs At 6:00, The Feed Hole Is At 6:00)	1	
92630K	Retainer Kit, A604 2nd-4th Clutch Piston (Contains: Aluminum Piston # 92968, With Out O-Rings # 92232 & 92233)	1	4883078
92630AK	Retainer Kit, A604 2nd-4th Clutch Piston (Contains: # 92630 & A Bonded Piston # 92968)	1	5102880AA
92670A	Shaft, A604 Input (22 Splines)(9 1/2" Long)	1	
92670B	Shaft, A604 Input (24 Splines)(9 1/2" Long)	1	
92698	Baffle, A604 Pinion Bearing (2.760"OD) Early's Are Long & Late's Are Short, But They All Retro-Fit	1	4471869
92698A	Baffle, A604 Differential Bearing (Under Axle Seal In Extension Housing) 2.210"OD	1	4567494
92698B	Baffle, A604 Differential Bearing (Under Axle Seal In Differential Retainer) 2.605"OD	1	4659290
92710	Gear, A604 Output (59 Teeth)	1	
92710A	Gear, A604 Output (55 Teeth)	1	
92710B	Gear, A604 Output (47 Teeth)	1	
92710C	Gear, A604 Output (53 Teeth)	1	
92710D	Gear, A604 Output (49 Teeth)	1	
92710E	Gear, A604 Output (46 Teeth)	1	
92710F	Gear, A604 Output (50 Teeth)	1	
92712	Gear, A604 Transfer (54 Teeth)	1	
92712A	Gear, A604 Transfer (58 Teeth)	1	
92712B	Gear, A604 Transfer (50 Teeth)	1	
92712C	Gear, A604 Transfer (46 Teeth)	1	
92712D	Gear, A604 Transfer (49 Teeth)	1	
92713	Retainer, A604 Transfer Gear Cup Race (Steel Housing)	1	4412273
92716	Differential Housing, A604 (W/22 Roller Bearings On Both Sides) Axle Does Not Use A Snap Ring To Hold It To Differential	1	
92716A	Differential Housing, A604 (W/22 Roller Bearing On Housing Side) (W/19 Roller Bearing On Ring Gear Side) Roll Pin Holds .665"OD Cross Pin In (Axle Uses A Snap Ring To Hold It To The Differential) Has An Open Housing, You Can See The Spider Gears	1	
92716AA	Differential Housing, A604 (W/22 Roller Bearing On Housing Side) (W/19 Roller Bearing On Ring Gear Side) Roll Pin Holds .733"OD Cross Pin In (Axle Uses A Snap Ring To Hold It To The Differential) Has An Open Housing, You Can See The Spider Gears (Can Use 92716AAA)	1	
92716AAA	Differential Housing, A604 (W/22 Roller Bearing On Housing Side)(W/19 Roller Bearing On Ring Gear Side)(2 Brackets Holds .733"OD Cross Pin In)(Axle USes A Snap Ring To Hold It To The Differential) (Has A Closed Housing, You Cannot See The Spider Gears)(Can Use 92716AA)	1	
92716AB	Differential Housing, A604 (W/22 Roller Bearing On Housing Side) (W/19 Roller Bearing On Ring Gear Side) 2 Brackets Hold .665"OD Cross Pin In (Axle Uses A Snap Ring To Hold It To The Differential)	1	
92716AC	Differential Housing, A604 (W/22 Roller Bearing On Housing Side) (W/19 Roller Bearing On Ring Gear Side)(Tin Snap Ring Holds Cross Pin In)(Axle Uses A Snap Ring To Hold It To The Differential)(Ring Gear Mounts To Nose Side Of Mounting Flange)	1	
92716AD	Differential Housing, A604 (W/22 Roller Bearing On Housing Side) (W/19 Roller Bearing On Ring Gear Side) (Roll Pin Holds Cross Pin In) (Axle Uses A Snap Ring To Hold It To The Differential)	1	
92716AE	Differential Housing, A604 (W/22 Roller Bearing On Both Sides) (Axle Uses A Snap Ring To Hold It To The Differential)	1	
92716B	Differential Housing, A604 All Wheel Drive (W/25 Roller Bearing On Housing Side) (W/22 Roller Bearing On Ring Gear Side) Axle Uses A Snap Ring To Hold It To The Differential	1	
92716BA	Differential Housing, A604 All Wheel Drive (W/25 Roller Bearing On Housing Side) (W/19 Roller Bearing On Ring Gear Side)	1	
32717BK	Gear Kit, A604 (12 Bolt) Side & Spider Gears W/Washers & Pins)	1	
92717A-11	Retainer, A604 Differential Side Gear Cross Pin (Superior) (For .661"OD Pin) Holds Cross Pin In Housing	1	
92717AK-11	Pin & Retainers, A604 Differential Side Gear (For .661"OD Pin) Contains: 2 Retainers & 1 Cross Pin	1	
92717B-11	Retainer, A604 Differential Side Gear Cross Pin (Superior) (For .735"OD Pin) Holds Cross Pin In Housing	1	

© Whatever It Takes Transmission Parts. Inc.

PART #	HARD PARTS (Continued)	QTY	REFERENCE #
92717BK-11	Pin & Retainers, A604 Differential Side Gear (For .735”OD Pin) Contains: 2 Retainers & 1 Cross Pin	1	
92717C-11	Retaining Pin, A604 Holds Differential Side Gear Cross Pin In Housing	1	
92717D-11	Retainer, A604 Differential Side Gear Cross Pin 2000-Up (Holds Cross Pin In Housing)	1	
92720A	Ring Gear, A604 Differential (59 Teeth)	1	
92720B	Ring Gear, A604 Differential (60 Teeth)	1	
92720BA	Ring Gear, A604 Differential (63 Teeth)	1	
92720C	Ring Gear, A604 Differential (56 Teeth)	1	
92725	Retainer, A604 Differential 2WD (Cast Iron) (6 Bolt) (2.477” Tall)	1	4659736
92725B	Retainer, A604 Differential All Wheel Drive (Cast Iron) (6 Bolt) (2.676” Tall)	1	
92725C	Retainer, A604 Differential All Wheel Drive (Steel) (6 Bolt)	1	
92727A	Retainer, A604 Drive Transfer Gear Nut 1995-Up (Keeps Nut From Backing Off) (This Goes With 92727B)	2	
92727B	Plate, A604 Drive Transfer Gear Nut Retainer 1995-Up (this Goes With 92727A)	2	
92730A	Pinion, A604 Transfer Shaft (17 Teeth)	1	4531978
92730B	Pinion, A604 Transfer Shaft (16 Teeth)(No Groove)(2.410”OD)	1	4531976
92730BK	Ring/Pinion Set, A604 Differential (16 Teeth,No Groove & 60 Teeth)	1	
92730BA	Pinion, A604 Transfer Shaft (16 Teeth)(3 Groove)(2.270”OD)	1	
92730C	Pinion, A604 Transfer Shaft (15 Teeth)	1	
92730CK	Ring/Pinion Set, A604 Differential (15 Teeth & 56 Teeth)	1	
92740	Valve Body, A604 (#33 On Plate) 1989-90	1	
92740A	Valve Body, A604 (#46 On Plate) 1991-92	1	
92740B	Valve Body, A604 (#66 On Plate) 1993-94	1	
92740BA	Valve Body, A604 (#66 On Plate) 1993-94 (No PRNDL Switch)	1	
92740C	Valve Body, A604 (Uses PRNDL Switch)(With 9 Round Pin Connector)(PRNDL Switch Is The Black Switch On Valve Body)(Has No Coil Spring Under Case Connector)	1	
92740CA	Valve Body, A604 (Uses A PRNDL Switch)(With 9 Flat Blade Connector)(PRNDL Switch Is The Black Switch On Valve Body)(Has No Coil Spring Under Case Connector)	1	
92740D	Valve Body, A604 (With Governor Pressure Solenoid)(With 2 Case Connectors) 2006-08	1	

PART #	VALVE BODY COMPONENTS	QTY	REFERENCE #
A12741A-5	Check Ball, Chrysler (All) (11/32”OD) (Torlon)	AR	
S92741C-6	Plugs, A604 Switch Valve (2 Plugs)(Non VLP Units)	1	
S92741CA-6	Plugs, A604 Switch Valve (Oversized)(Non VLP Units) (Use T-92835-RM) (Contains: 2 Oversized Replacement Plugs & 1 End Plug)	1	
T-92835-RM	Reamer, A604 For Oversized Plugs # S92741CA-6 (Sonnax)	1	
T-92835-BST2	Bore Sizing Tool, 40TE/40TES/41AE/41TE/41TES (When Used After Reaming, This Provides Exact Bore Sizing And Superior Bore Surface Finish)(Prepares Bore Installation Of Sonnax Oversized Solenoid Switch Valve Plug Kit S92741CA-6)(Sonnax)	1	
S92741CB-6	Plugs, A604 Switch Valve (Oversized)(VLP Units)(Use T-92835-RM22)	1	
T-92835-RM22	Reamer, A604 For S92741CB-6	1	
S92741CS-1	Valve, A604 Solenoid Switch (Oversize) (Sonnax) Must Use T-F-92835-TL Reamer)	1	
T-F-92835-TL	Reamer, For S92741CS-1	1	
S92741CK	Valve Kit, 41TE/40TE/41AE/40TES/41TES TCC Regulator (Oversized) 1995-Up (Contains Valve & Spring)(Must Use T-F-928358-TL37)(Sonnax)	1	
T-F-92835-TL37	Tool Kit For S92741CK	1	
S92741CSK	Valve Kit, A604 Solenoid Switch (.453”OD)(Oversize)(Sonnax)(Contains: Oversize Valve, Valve Plugs, End Plug)(Must Use T-F-92835-TL31)	1	
T-F-92835-TL31	Reamer For S92741CSK	1	
S92741CASK	Valve Kit, A604 Solenoid Switch (.420”OD)(Oversize)(Sonnax)(Contains: Oversize Valve, Valve Plugs, End Plug)(Must Use T-F-92835-TL32)	1	
T-F-92835-TL32	Reamer For S92741CASK	1	
S92741CBSK	Valve Kit, 40TE/40TES/41AE/41TE/41TES Oversized TCC Control & Plunger Kit (Not For Use In Early 40TE/41TE/41AE Units With #33 Seperator Plate)(Must Use T-F-92835-TL33 & T-VB-Fix)(Sonnax)	1	
T-F-92835-TL33	Reamer For S92741CBSK	1	
S92741L	Valve Repair, A604 Solenoid Switch (Without Tool)(Transgo) (Fits Valve Bodies With .420 Large Land Diameter)	1	
S92741LK	Valve Repair, A604 Solenoid Switch (With Tool)(Transgo) (Fits Valve Bodies With .420 Large Land Diameter)	1	
A92741LA	Valve Repair, A606 Solenoid Switch (Without Tool)(Transgo) (Fits VB’s With .453 Large Land Diameter)	1	
A92741LAK	Valve Repair, A606 Solenoid Switch (With Tool)(Transgo)(Fits VB’s With .453 Large Land Diameter)	1	
S92741P-2	Sleeve, A604 Pressure Regulator (Sonnax)	1	92835-07
S92741PK	Valve Kit, A604 Converter Regulator (2 Valves)(Sonnax)	1	92835-01K
S92741PCK	Sure Cure Kit, A604 (Sonnax)	1	

© Whatever It Takes Transmission Parts. Inc.

92741T-2 ..... Bushing, A604 Boost Valve (Transgo) ..... 1 ..... 604-BSH
VB-101 ..... Valve Body Plate Ball Seat Repair Kit (5 Per Bag) ..... 1 .....

PART #	HARD PARTS (Continued)	QTY	REFERENCE #
92758	Cover, A604 Differential	1	4659520
92759	Rear Cover, A604 Transfer Gear (1 Dimple) 1989-E91	1	
92759A	Rear Cover, A604 Transfer Gear (2 Dimples) L1991-Up	1	4659636
92760B	Case, A604 3.3/3.8 Liter (W/Out By-Pass Valve Under Pump) 1989-90	1	
92760C	Case, A604 3.3/3.8 Liter (W/By-Pass Valve Under Pump) 1991-94	1	
92760CC	Case, A604 3.3/3.8 Liter (No Black Switch On Valve Body) 1995	1	
92760CCC	Case, A604 3.3/3.8 Liter (No Black Switch On Valve Body) 1995-96 (Early Case Converted To Late)	1	
92760CD	Case, A604 3.3/3.8 Liter (1.350"ID Case Connector Hole) 1996-98 (W/Black Switch On Valve Body)	1	
92760CDC	Case, A604 3.3/3.8 Liter (1.350"ID Case Connector Hole) 1996-98 (W/Black Switch On Valve Body) (Early Case Converted To Late)	1	
92760CE	Case, A604 3.3/3.8 Liter (1.420"ID Case Connector Hole) 1999-Up (W/Black Switch On Valve Body)	1	4883524AA
92760CEC	Case, A604 3.3/3.8 Liter (1.420"ID Case Connector Hole) 1999-Up (W/Black Switch On Valve Body)(Early Case Converted To Late)	1	
92760CF	Case, A604 2.7L/3.3L/3.5L/3.8L (1.420"ID Case Connector Hole) 2001-05 (W/Black Switch On Valve Body) Has No Mounting Holes At Rear Left Of Case On The Pan Rail)(Bell Has 13 Total Bolt Holes)(Can Use 92760CG)	1	
92760CFC	Case, A604 2.7L/3.3L/3.5L/3.8L (1.420"ID Case Connector Hole) 2001-05 (With Black Switch On Valve Body) An Early Case Converted To Late	1	
92760CG	Case, A604 2.7L/3.3L/3.5L/3.8L (1.420"ID Case Connector Hole) 2001-05 (With Black Switch On Valve Body) Has 2 Mounting Holes At Rear Left Of Case On The Pan Rail)(Bell Has 13 Total Bolt Holes)(Cast # 966)	1	
92760CH	Case, A604 (2.7L/3.3L/3.5L/3.8L) (1.420"ID Case Connector Hole) 2006-Up (Has A 1.130"ID EPC Solenoid Connector Hole) (Has 2 Internal Solenoids) (Has 2 Mounting Holes At Rear Left Of Case On The Pan Rail)	1	
92760D	Case, A604 (2.5/3.0 Liter) (W/Out By-Pass Valve Under Pump) 1991-94	1	
92760E	Case, A604 (2.5/3.0 Liter) (W/By-Pass Valve Under Pump) 1991-94	1	
92760EA	Case, A604 (2.5/3.0 Liter) (No Black Switch On Valve Body) 1995-96	1	
92760EB	Case, A604 (2.5/3.0 Liter) (1.350"ID Case Connector Hole) 1995-98 (W/Black Switch On Valve Body)	1	
92760EC	Case, A604 (2.5/3.0 Liter) (1.420"ID Case Connector Hole) 1998-05 (W/Black Switch On Valve Body)(Can Use 92760EB With The Grommet For The Small Connector)(Grommet Comes In Kit)	1	
92760HA	Case, A604 (2.0/2.4 Liter) (1.350"ID Case Connector Hole) 1995-98 (W/Black Switch On Valve Body)	1	
92760HB	Case, A604 (2.0/2.4 Liter) (No Black Switch On Valve Body) 1995-96	1	
92760HC	Case, A604 (2.0/2.4 Liter) (1.420"ID Case Connector Hole) 1999-05 (W/Black Switch On Valve Body)(Can Use 92760HA With The Grommet For The Small Connector)(Grommets Come In Kits)	1	
92760HD	Case, A604 2.0L/2.4L (6 1/8" Top Bolts)(1.420"ID Case Connector Hole)(1.130"ID EPC Solenoid Connector Hole)(Starter At 2:00)(Flat Top) 2006-Up	1	
92760J	Case, A604 2.4L (5 1/4" Top Bolts)(1.420"ID Case Connector Hole)(1.130"ID EPC Solenoid Connector Hole)(Starter At 2:00)(Round Top) 2006-Up	1	

PART #	CASE COMPONENTS	QTY	REFERENCE #
S92494-2	Shield, A604 Dipstick Tube (Sonnax) Fits Cases With Filler Tubes That Extend Into The Case 1.25" Only	1	
92540	By-Pass Valve, A604 (In Case Under Pump)	1	4539880
S92540-6	Plug, A604 By-Pass Valve (2 Per Kit) Sonnax	1	
92540A	By-Pass Valve, A604 (Splices Into Cooler Line)	1	5252836
92761CD	Case Kit, A604 (Converts 1991-94 3.3 & 3.8 Liter To 1996-98) Case Must Be Machined For The Tapered Case Connector Sleeve. (Contains: Bracket, Connector Sleeve, 2 Neutral Plugs & Bolts)	1	
92761CE	Case Kit, A604 (Converts 1991-94 3.3 & 3.8 Liter To 1999-Up) Case Must Be Machined For The Tapered Case Connector Sleeve. (Contains: Bracket, Connector Sleeve, 2 Neutral Plugs & Bolts)	1	

PART #	HARD PARTS (Continued)	QTY	REFERENCE #
92765	Pan, A604 Bottom (Fits Case With 1 Valve Body Connector) 1989-05	1	4431997
92765D	Pan, A604 Bottom (Fits Case With 2 Valve Body Connectors) 2006-Up	1	
92770	Extension Housing, A604 (W/Speed-O Hole) 1989-92	1	

© Whatever It Takes Transmission Parts. Inc.

PART #	HARD PARTS (Continued)	QTY	REFERENCE #
92770A	Extension Housing, A604 (No Speed-O Hole) 1993-Up	1	
92770B	Extension Housing, A604 (1 3/4" Overall Height) 4 Bolt (Cast # 4567511)	1	4567413
92770C	Adapter Housing, A604 AWD (Steel)(3 1/2" x 7 1/4")(1.665" Thick)(With 8 Holes, 4 Holes Are Threaded)(#273 Cup Race Presses Out Of This Housing)	1	
92774BK	Repair Kit, A604 Speed-O Housing (VSS) (3 Prong W/Connector) (Includes: Speed-O Housing, Connector W/8" Wires To Splice)	1	
92777K	Bolt Set, A604 Pump To Case (5 Pieces)	1	
92778K	Bolt Set, A604 Pump Body To Stator (6 Pieces)	1	
92779K	Bolt Set, A604 Bottom Pan To Case (10mm)(14 Pieces)	1	
S36779A	Pan Bolt, A604 (Metric)(Sonnax)	AR	
92780K	Bolt Set, A604 Transfer Gear Cover To Case (10mm) (10 Pieces) (Can Use 92779K)	1	
92781K	Bolt Set, A604 Extension Housing To Case (13mm X 1 1/2" Long) (4 Pieces)	1	
92782K	Bolt Set A604 Valve Body To Case (10mm) (18 Pieces)	1	
92785K	Bolt Set, A604 Differential Cover To Case (10mm) (12 Pieces) (Can Use 92779K)	1	
92786K	Bolt Set, A604 Differential To Ring Gear	1	
62791	Bolt, A604 MPLS Sensor To Valve Body	1	
92792K	Bolt Set, A604 External Solenoid To Case (10mm) (3 Pieces)	1	
92793K	Bolt Set, A604 Differential Retainer To Case (13mm X 1 1/8" Long) (6 Pieces)	1	
92795	Bolt W/Washer, A604 Holds On Output Gear (1/4" Thick) 1989-E91	1	
92795A	Bolt W/Washer, A604 Holds On Output Gear (5/16" Thick) L1991-Up	1	6503548
92796	Nut W/Washer, A604 Holds On Transfer Gear (Gray) 1989-E91	1	6501711
92796A	Nut W/Washer, A604 Holds On Transfer Gear (Gold) L1991-Up	1	6502611
92860	Snap Ring, A604 Holds Underdrive Pressure Plate In (.068" Thick) 1989-E90	1	4377189
92860-1	Snap Ring, A604 Holds Underdrive Pressure Plate In (.060" Thick) L1990-92	1	
92860A	Snap Ring, A604 Holds Underdrive Pressure Plate In (.076" Thick)(6 5/16"OD) L1990-Up	1	4567602
92860B	Snap Ring, A604 Holds Underdrive Pressure Plate In (.090" Thick)(6 5/16"OD) 1997-Up	1	
92860K	Snap Ring Set, A604 (40TE/41TE/F4AC1)(21 Pieces) 1988-Up	1	MISCK301
92860KA	Snap Ring Set, A604 (10 Piece) 1989-96 (Contains: # 860, 860A, 860B, 861, 863A, 876A, 885, 891, 877 & 875)	1	
92860KB	Snap Ring Set, A604 (8 Piece) 1997-Up (Contains: # 860B, 861, 863A, 875, 885, 891, 877 & 82876A)	1	
92861	Snap Ring, A604 Overdrive Pressure Plate (Bottom) (.061" Thick) Wavy (6 7/8"OD)	1	4505621
92862	Snap Ring, A604 Holds Spring To Piston (.060" Thick) (5.325"OD)	1	4412203
92863	Snap Ring, A604 Holds Low/Reverse Pressure Plate In Case (.068" Thick) (7"OD) 1989-Up	1	4799858AA
92863A	Snap Ring, A604 Holds Low/Reverse Pressure Plate In Case (.076" Thick) (7"OD) 1998-Up	1	
92863B	Snap Ring, A604 Holds Low/Reverse Pressure Plate In Case (.088" Thick) (7"OD) 1989-Up	1	
92875	Snap Ring, A604 Holds Input Clutch Retainer In (.095" Thick) 2.595"OD (W/2 Eyelets)	1	
92876	Snap Ring, A604 Under The Underdrive Pressure Plate 1989-E90	1	4412307
92876A	Snap Ring, A604 Under The Underdrive Pressure Plate (.060" Thick) L1990-Up	1	4659980
92877	Snap Ring, A604 Holds Underdrive Retainer In (.077" Thick) 2.286"OD (W2 Eyelets)	1	6501715
92880	Snap Ring, A604 Holds Input Shaft To Hub (.061" Thick) 1.030"OD (Wire Type)	1	6501702
92882	Snap Ring, A604 Front Planet To Rear Ring Gear (.061" Thick) (4.720"OD)	2	6035238
92883	Snap Ring, A604 Holds 2nd-4th Clutch Retainer In (.061" Thick) (7"OD)	1	4505591
92885	Snap Ring, A604 Under Low/Reverse Clutch Pressure Plate (.038"Thick)	1	4412395
92891	Snap Ring, A604 Overdrive Pressure Plate (Top) (.069" Thick)	1	4531411
92892	Snap Ring, A604 Holds Reverse Pressure Plate In (.061" Thick)	1	4377195
92892A	Snap Ring, A604 Holds Reverse Pressure Plate In (.071" Thick)	1	4412871
92892B	Snap Ring, A604 Holds Reverse Pressure Plate In (.081" Thick)	1	4412872
92892C	Snap Ring, A604 Holds Reverse Pressure Plate In (.090" Thick)	1	4412873
92893	Snap Ring, A604 Holds Low/Reverse Piston In	1	6501853
92899	Snap Ring, A604 Transfer Shaft Retainer	1	6501936
92930	Use 92950A	1	
92932	Use 92937	1	
92935	Accumulator Assembly, A604 Overdrive & Underdrive (W/1 Spring) 1989-Up	1-2	
92936	Spring, A604 Overdrive Accumulator 1989-95 (Also Fits Underdrive Accumulator 1989-95)	1-2	
92936A	Spring, A604 Overdrive Accumulator 1996-Up (Also Fits Underdrive Accumulator 1996-Up)	1-2	4471880
92937	Piston, A604 Overdrive/2-4 & Underdrive Accumulator (Aluminum) 1989-Up (Takes Two 72191AT Teflon Rings)	1-2	4446620
S92937-1K	Sleeve Kit, A604 Overdrive/2-4/Low/Reverse/Underdrive Accumulator 1989-03 (Sonnax) (Contains: Piston, Sleeve, 2 O-Rings, 2 Teflon Seals)(Firmer Shifts Than OE)	1	
92937A	Piston, A604 Overdrive/2-4/Low/Reverse & Underdrive Accumulator (Bonded) 2004-Up	1-3	
92937K	Piston Kit, A604 Overdrive Accumulator With Rings 1989-Up (Also Fits A604 2-4 Accumulator & Underdrive Accumulator)	1-3	
S92937K	Sleeve Kit, A604 Overdrive/2-4/Low/Reverse/Underdrive Accumulator 1989-03 (Sonnax) (Contains: Piston, Sleeve, 2 Springs, 2 O-Rings, 2 Teflon Seals)(Restores OE Shifts)	1	
92937HDK	Piston Kit, A604 Overdrive Accumulator (Aluminum) With Rubber O-Rings (Southeast) (Also Fits A604 2-4 & Underdrive Accumulator)	1-3	
92947	Piston, A604 Low/Reverse Accumulator (Aluminum) 1989-Up	1	

© Whatever It Takes Transmission Parts. Inc.

92949	Retainer, A604 Low/Reverse Accumulator (Aluminum) 1989-03	1	4431617
92950	Accumulator Assembly, A604 Underdrive (W/1 Spring) (Use 92935).	1	
92950A	Accumulator Assembly, A604 Overdrive & Underdrive (W/2 Springs)	1	
92951	Spring, A604 Overdrive Accumulator (Outer) (Fits 2 Spring Type)	1	4471880
92951A	Spring, A604 Overdrive Accumulator (1 Spring Type) (Use 92936)	1	
92951B	Spring, A604 Overdrive Accumulator (Inner) (2 Spring Type)	1	
92952	Piston, A604 Overdrive Accumulator (Use 92937)	1	4446620
92957	Retainer, A604 Low/Reverse Clutch Piston (Tin) 1989-03 (2nd Design, The 3 Holes In A Row Are All The Same Size, Replaces 1st Design)	1	4431648
92957A	Retainer, A604 Low/Reverse Clutch Piston (Tin) 2004-Up (3rd Design, The 3 Holes In A Row Has A Larger Middle Hole)(Retro Fits All Previous Designs)	1	4800255AA
92960	Piston, A604 Underdrive Clutch (W/Molded Rubber)	1	4431612
92960CK	Piston Kit, A604 (40TE) (Contains: # 960, 967C, 968C) 2004-Up	1	
92960DK	Piston Kit, A604 (41TE) (Contains: # 960, 967D, 968D) 2004-Up	1	
92961	Piston, A604 Overdrive & Reverse Clutch (8 Lug Overdrive Pressure Plate)	1	5013476
92961A	Piston, A604 Overdrive & Reverse Clutch (4 Lug Overdrive Pressure Plate)	1	5013476AA
92961AK	Piston Kit, A604 Overdrive & Reverse W/Input Clutch Hub 1990-Up (Includes: Piston, Input Clutch Hub And 2 O-Rings)	1	
92967	Piston, A604 (40TE/41TE) Low/Reverse Clutch (Aluminum) (1.055” Thick) 1989-03	1	4431672
92967C	Piston, A604 (40TE) Low/Reverse Clutch (Bonded)(1.185” Thick) 2004-Up	1	
92967D	Piston, A604 (41TE) Low/Reverse Clutch (Bonded)(1.040” Thick) 2004-Up (Cast # 4800256AA) (When Out Use 262967A)	1	
262967A	Piston, A604 (40TE) Low/Reverse Clutch (Bonded)(1.054” Thick) (Cast # 4800256AA) 2004-Up	1	
92968	Piston, A604 (40TE/41TE) 2-4 Clutch (Aluminum) (.668” Thick) 1989-2003	1	4883078
92968C	Piston, A604 (40TE) 2-4 Clutch (Bonded)(.855” Thick) 2004-Up	1	
92968D	Piston, A604 (41TE) 2-4 Clutch (Bonded)(.665” Thick) 2004-Up	1	
92970	Spring, A604 Underdrive Clutch Return (3.002”OD) (2.250” Tall)	1	4377177
92971	Spring, A604 Overdrive & Reverse Clutch Return (.063” Thick) (4.992”OD) (8 Fingers)	1	4412202
92977	Spring, A604 Low/Reverse Clutch Return (.072” Thick) (5.390”OD) (8 Fingers) 1989-03	1	4412261
82977B	Spring, A604 Low/Reverse Clutch Return (.075” Thick)(5.715”OD)(10 Fingers) 2004-Up	1	
92978	Spring, A604 2nd-4th Clutch Return (.063” Thick) (6 1/2”OD) (8 Fingers)	1	4412248
92980	Housing, A604 Underdrive Piston (.555” Thick) 1989-Up	1	4431610
92980A	Housing, A604 (40TE) Underdrive Piston (.700” Thick) 2004-Up	1	
92994	Park Rod Actuator, A604 (.413” Wide Roller)	1	4431634
92995	Park Pawl, A604 W/Pin & Spring (.340”OD Pin)	1	4883505AA
92996	Cooler Line Fitting, A604	1	

© Whatever It Takes Transmission Parts. Inc.

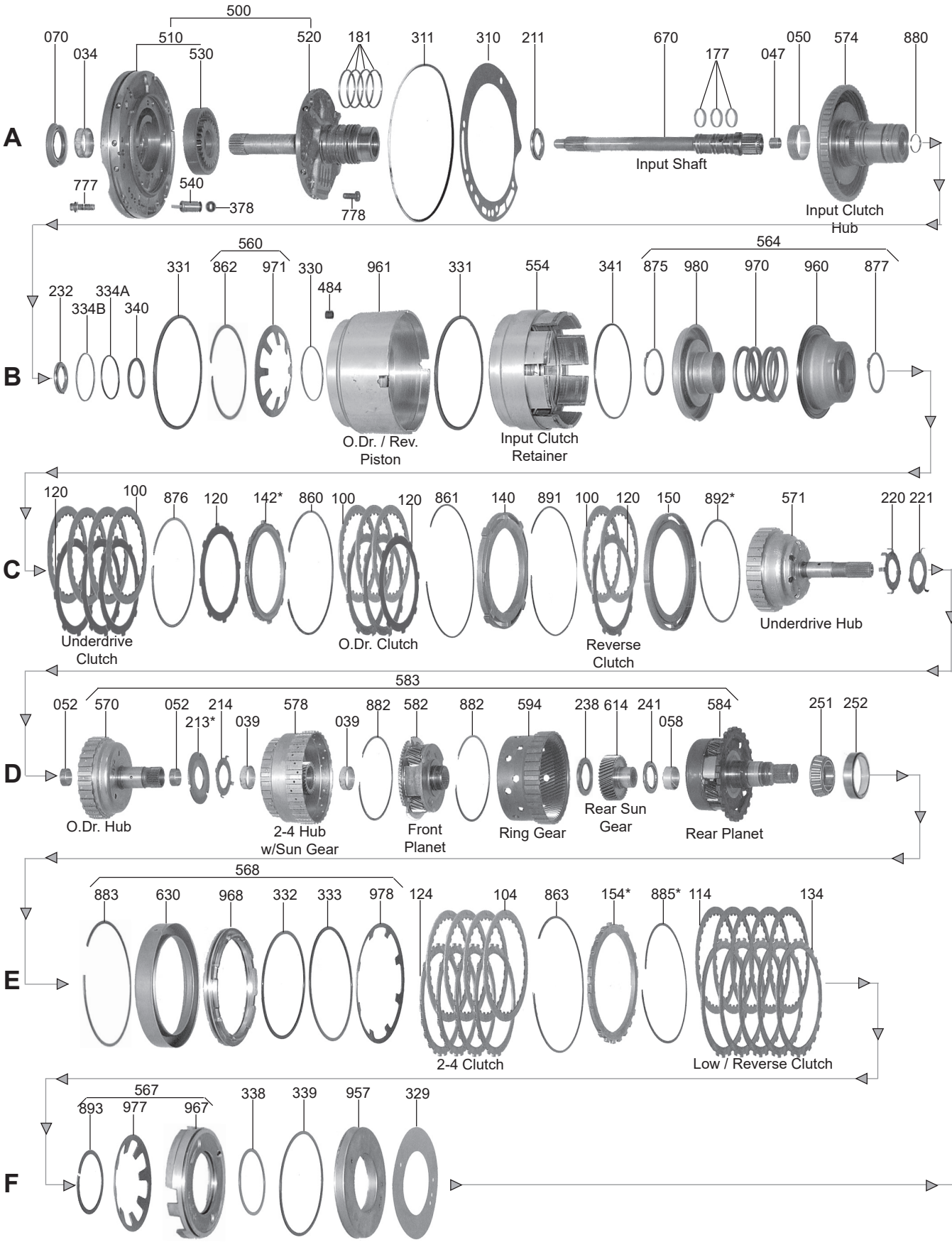
A
500
070
034
510
530
520
181
311
310
211
670
177
047
050
574
880
777
540
378
778
Input Shaft
Input Clutch Hub
B
560
564
232
334A
334B
340
331
862
971
330
484
961
331
554
341
875
980
970
960
877
O.Dr. / Rev. Piston
Input Clutch Retainer
C
120
100
876
120
142*
860
100
120
861
140
891
100
120
150
892*
571
220
221
Underdrive Clutch
O.Dr. Clutch
Reverse Clutch
Underdrive Hub
D
583
052
570
052
214
213*
039
578
039
882
582
882
594
238
614
241
058
584
251
252
O.Dr. Hub
2-4 Hub w/Sun Gear
Front Planet
Ring Gear
Rear Sun Gear
Rear Planet
E
568
883
630
968
332
333
978
124
104
863
154*
885*
114
134
2-4 Clutch
Low / Reverse Clutch
F
567
893
977
967
338
339
957
329

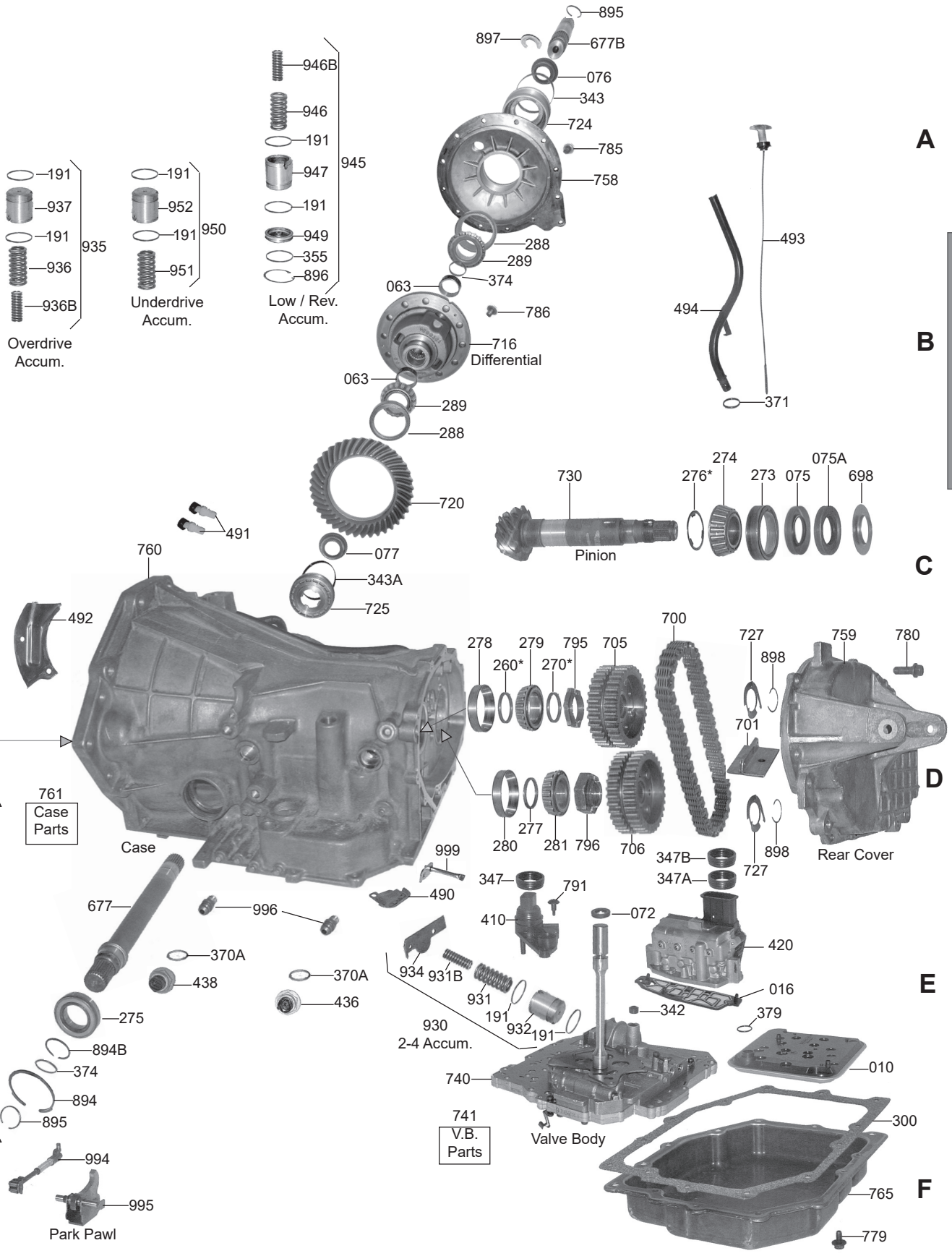

1-800-940-0197

© Whatever It Takes Transmission Parts. Inc.

PART #	PAPER & RUBBER KIT	QTY	REFERENCE #
62000	Paper & Rubber Kit, A606 1993-Up	1	

PART #	OVERHAUL KITS	QTY	REFERENCE #
62002	Overhaul Kit, A606 1993-Up	1	

PART #	MASTER L/STEEL KIT	QTY	REFERENCE #
62004	Master L/Steels, A606 1993-Up	1	

PART #	MASTER W/STEEL KIT	QTY	REFERENCE #
62006	Master W/Steels, A606 1993-Up	1	

PART #	FILTER	QTY	REFERENCE #
62010	Filter, A606 (1/2 Metal)(Held On By Brackets)(With Rectangle Pick-Up) 1993-Up	1	4796730
82010A	Filter, A606 (Some) (Plastic)(With 2 Bolt Holes)(With Oval Pick-Up)(OE) (Filtertek)	1	

PART #	FILTER KIT	QTY	REFERENCE #
62011	Filter Kit, A606 1993-Up	1	

PART #	MISC. FILTERS	QTY	REFERENCE #
92015	Screen, A606 Low/Reverse Piston Feed (Orifice Block)	1	3878313
62016	Filter/Plate, A606 Solenoid Assembly To Valve Body	1	
12018	Screen, A606 Valve Body Regulator Feed	1	

PART #	BUSHINGS	QTY	REFERENCE #
92030	Bushing Kit, A606 1993-95	1	
92030A	Bushing Kit, A606 1996-Up (For 2001-Up Sell 92047A Also)	1	
12034	Bushing, A606 Pump Body (Babbit)	1	2466796
12034A	Bushing, A606 Pump Body (Bronze)	1	
92039	Bushing, A606 2-4 Clutch Hub 1993-95	2	
92039A	Bushing, A606 2-4 Clutch Hub 1996-Up	2	
92047	Bushing, A606 Input Shaft (Rear) (.595”OD) 1989-01	1	4412211
92047A	Bushing, A606 Input Shaft (Rear) (.605”ID) 2001-Up	1	
92047B	Bushing, A606 Stator (Rear)(Bronze) 1995-Up	1	
92050	Bushing, A606 Input Clutch Hub (Front)	1	4377170
T-92003-TL	Bushing Tool, A606 For S92050 (Sonnax)	1	
92052	Bushing, A606 Overdrive Clutch Hub (.365” Tall) 1993-95	2	4412219
92052A	Bushing, A606 Overdrive Clutch Hub (.283” Tall) 1996-Up	2	
S92052E	Bushing, A606 Overdrive Clutch Hub (1 Piece) 1989-95 (Sonnax)	1	
S92052EA	Bushing, A606 Overdrive Clutch Hub (1 Piece) (Fits Hub With .937”ID) 1996-Up (Sonnax)	1	
S92052EB	Bushing, A606 Overdrive Clutch HUb (1 Piece) (Fits Hub With .941”ID) 1996-Up (Sonnax)	1	
92058	Bushing, A606 Rear Planet	1	4412230
62063	Bushing, A606 Differential Housing (Both Sides)	2	4567225

PART #	METAL CLAD SEALS	QTY	REFERENCE #
12070	Seal, A606 Front (Without Flange)(.363” Thick)	1	4269057
12070A	Seal, A606 Front (With Flange)(.363” Thick)	1	
92072	Seal, A606 Linkage (Valve Body Stem Seal) Rubber	1	4412836
62075	Seal, A606 Transfer Shaft (Small) (W/12 Indentions)	1	4567809
62075A	Seal, A606 Transfer Shaft (Large) (Smooth)	1	4567811
62076	Seal, A606 Right Axle (Outer Differential Adjuster)	1	4539891
62077	Seal, A606 Left Axle (Inner Differential Adjuster)	1	4539796

PART #	FRICTION CLUTCH	QTY	REFERENCE #
92100A	Friction, A606 Underdrive & Reverse Clutch (.071”) Tan 1993-Up	10	4505629
92100B	Friction, A606 Overdrive Clutch (.073”)(Hi-Energy) 1993-Up	10	4531678
92100BPPK	Friction & Steel Kit, A606 Overdrive Clutch (.073”) (High Energy) 1993-Up	1	
92104	Friction, A606 2-4 Clutch (.086”) Hi-Energy 1993-Up	4	4377125
92104A	Friction, A606 2-4 Clutch (.086”) Tan 1993-UP	4	4567212
92114	Friction, A606 Low/Reverse Clutch (.072”) Hi-Energy 1993-Up	5	4567573
92114A	Friction, A606 Low/Reverse Clutch (.072”) Tan 1993-UP	5	4377134

© Whatever It Takes Transmission Parts. Inc.

PART #	STEEL CLUTCH	QTY	REFERENCE #
92120	Steel, A606 Overdrive / Underdrive / Reverse Clutch (.068")	8	4659053
92124	Steel, A606 2-4 Clutch (.101") 1993-Up	4	4659054
92134	Steel, A606 Low/Reverse Clutch (.067") 1993-Up	5	4659055
92139	Steel Module, A606	1	

PART #	CLUTCH PRESSURE PLATES	QTY	REFERENCE #
92140A	Pressure Plate, A606 Overdrive Clutch (4 Lug) 1993-Up	1	4531556
92142A	Pressure Plate, A606 Underdrive Clutch (.215") 1993-96 (Use 92142BK)	1	4723684
92142AK	Pressure Plate Kit, A606 Underdrive Clutch (.215") 1993-Up (With # 92860A Snap Ring)	1	
92142B	Pressure Plate, A606 Underdrive Clutch (.235") 1993-Up	1	4723683
92142BK	Pressure Plate Kit, A606 Underdrive Clutch (.235") 1993-Up (With # 92860A Snap Ring)	1	
92142BA	Pressure Plate, A606 Underdrive Clutch (.245") 1990-Up	1	
92142BAK	Pressure Plate Kit, A606 Underdrive Clutch (.245") 1990-Up (With #92140A & 92860A)	1	
92142C	Pressure Plate, A606 Underdrive Clutch (.255") 1993-Up	1	4723682
92142D	Pressure Plate, A606 Underdrive Clutch (.275") 1993-96	1	
92142CK	Pressure Plate, A606 Underdrive Clutch (.255") 1993-Up (With #92860A Snap Ring)	1	
92142DK	Pressure Plate, A606 Underdrive Clutch (.275") 1993-Up (With #92860A Snap Ring)	1	
92150A	Pressure Plate, A606 Reverse Clutch (.335" Thick) (At The Edge) 1989-Up	1	
92150B	Pressure Plate, A606 Reverse Clutch (.186" Thick) 1993-Up	1	4531925
92154	Pressure Plate, A606 Low/Reverse Clutch (.210") 1993-Up	1	
92154A	Pressure Plate, A606 Low/Reverse Clutch (.220") 1993-Up	1	
92154B	Pressure Plate, A606 Low/Reverse Clutch (.230") 1993-Up	1	4897452AA
92154C	Pressure Plate, A606 Low/Reverse Clutch (.240") 1993-Up	1	4897453AA
92154D	Pressure Plate, A606 Low/Reverse Clutch (.250") 1993-Up	1	4897454AA
92154E	Pressure Plate, A606 Low/Reverse Clutch (.260") 1993-Up	1	4897455AA
92154F	Pressure Plate, A606 Low/Reverse Clutch (.270") 1993-Up	1	4897456AA

PART #	VALVE BODY KITS	QTY	REFERENCE #
T92167	Shift Kit, A606 1993-Up (Transgo)	1	SK®604

PART #	OIL SEALING RINGS	QTY	REFERENCE #
92175	Ring Kit, A606 1993-Up	1	
92177T	Ring, A606 Input Shaft (1.443"OD) (Teflon) 1993-Up	3	4446543
92181T	Ring, A606 Stator Support (Updated) (2.062"OD) (Teflon) 1993-Up	4	8675729
92181TK	Ring Kit, A606 Stator Support (Updated) (2.062"OD) (Teflon) 1993-Up	1	8675729
92191	Ring, A606 Accumulator (Non Rotating) (1.013"OD) (Graphite) 1993-Up	8	4446544
92191T	Ring, A606 Accumulator (1.013"OD) (Teflon) 1993-Up	8	
92191K	Ring Kit, A606 Accumulator (8 Rings) And Stator (4 Rings)	1	

PART #	WASHERS & BEARINGS	QTY	REFERENCE #
92200	Washer Kit, A606 (With Selectives)(7 Pieces) 1993-Up	1	
92201A	Bearing Kit, A606 1993-Up	1	
92211	Bearing W/Races, A606 Stator To Input Drum (1.713"OD)	1	4412209
92213	Race, A606 Overdrive Hub To 2-4 Hub (.039") (3 Slot)	1	4431662
92213A	Race, A606 Overdrive Hub To 2.4 Hub (.048") (3 Slot)	1	4431663
92213B	Race, A606 Overdrive Hub To 2.4 Hub (.057") (3 Slot)	1	4431664
92213C	Race, A606 Overdrive Hub To 2.4 Hub (.066") (3 Slot)	1	4431665
92213D	Race, A606 Overdrive Hub To 2.4 Hub (.074") (3 Slot)	1	4431666
92213E	Race, A606 Overdrive Hub To 2.4 Hub (.083") (3 Slot)	1	4431667
92213F	Race, A606 Overdrive Hub To 2.4 Hub (.091") (3 Slot)	1	4431668
92213G	Race, A606 Overdrive Hub To 2.4 Hub (.100") (3 Slot)	1	4431669
92213H	Race, A606 Overdrive Hub To 2.4 Hub (.109") (3 Slot)	1	4431670
92213HA	Race, A606 Overdrive Hub To 2.4 Hub (.117") (3 Slot)	1	4431671
92213J	Race, A606 Overdrive Hub To 2.4 Hub (.126") (3 Slot)	1	4431672
92213JA	Race, A606 Overdrive Hub To 2.4 Hub (.135") (3 Slot)	1	4446601
92214	Washer, A606 Overdrive Hub To 2-4 Hub (4 Tab) (1.263"ID)	1	4412216AB
92220	Washer, A606 Underdrive Hub To Overdrive Hub (5 Tab)(.050" Thick) (1.260"ID)	1	4471855
92220K	Washer Set, A606 Underdrive Hub To Overdrive Hub (Includes: D92220 (5 Tab) & D92221 (3 Tab))	1	5018923AA
92221	Race, A606 Underdrive Hub To Overdrive Hub (3 Tab)(.031" Thick)(1.265"ID)(Use D92220K)	1	4431973
92232	Bearing, A606 Input Drum To Underdrive Hub (1.790"OD) Also Fits A604 Rear Sun Gear To Rear Planet 1994-Up	1	4467262
92238	Bearing, A606 Front Planet To Rear Sun Gear	1	4412229

© Whatever It Takes Transmission Parts. Inc.

PART #	WASHERS & BEARINGS (Continued)	QTY	REFERENCE #
62241A	Bearing, A606 Rear Sun Gear To Rear Planet 1993-Up (Use 92232)	1	
62251	Bearing, A606 Presses On Rear Planet 1993-UP (Use 92279)	1	
62252	Cup Race, A606 Rear Planet Bearing To Case (Use 92278)	1	
62255	Cup Race, A606 Pinion Bearing (Transfer Case Side)	1	
62256	Bearing, A606 Pinion (Transfer Gear Side)	1	
62260	Shim, A606 Output Shaft To Rear Bearing (5.17-5.19mm)	1	5280020
62260A	Shim, A606 Output Shaft To Rear Bearing (5.20-5.22mm)	1	5280021
62260AA	Shim, A606 Output Shaft To Rear Bearing (5.23-5.25mm)	1	5280022
62260B	Shim, A606 Output Shaft To Rear Bearing (5.26-5.28mm)	1	5280023
62260BA	Shim, A606 Output Shaft To Rear Bearing (5.29-5.31mm)	1	5280024
62260C	Shim, A606 Output Shaft To Rear Bearing (5.32-5.34mm)	1	5280025
62260CA	Shim, A606 Output Shaft To Rear Bearing (5.35-5.37mm)	1	5280026
62260D	Shim, A606 Output Shaft To Rear Bearing (5.38-5.40mm)	1	5280027
62260DA	Shim, A606 Output Shaft To Rear Bearing (5.41-5.43mm)	1	5280028
62260E	Shim, A606 Output Shaft To Rear Bearing (5.44-5.46mm)	1	5280029
62260EA	Shim, A606 Output Shaft To Rear Bearing (5.47-5.49mm)	1	5280030
62260F	Shim, A606 Output Shaft To Rear Bearing(5.50-5.52mm)	1	5280031
62260FA	Shim, A606 Output Shaft To Rear Bearing (5.53-5.55mm)	1	5280032
62260G	Shim, A606 Output Shaft To Rear Bearing (5.56-5.58mm)	1	5280033
62260GA	Shim, A606 Output Shaft To Rear Bearing (5.59-5.61mm)	1	5280034
62260H	Shim, A606 Output Shaft To Rear Bearing (5.62-5.64mm)	1	5280035
62260HA	Shim, A606 Output Shaft To Rear Bearing (5.65-5.67mm)	1	5280036
62260HB	Shim, A606 Output Shaft To Rear Bearing (5.68-5.70mm)	1	5280037
62260HC	Shim, A606 Output Shaft To Rear Bearing (5.71-5.73mm)	1	5280038
62260J	Shim, A606 Output Shaft To Rear Bearing (5.74-5.76mm)	1	5280039
62260JA	Shim, A606 Output Shaft To Rear Bearing (5.77-5.79mm)	1	5280040
62260JB	Shim, A606 Output Shaft To Rear Bearing (5.80-5.82mm)	1	5280041
62260JC	Shim, A606 Output Shaft To Rear Bearing (5.83-5.85mm)	1	5280042
62260L	Shim, A606 Output Shaft To Rear Bearing (5.85-5.88mm)	1	5280043
62260LA	Shim, A606 Output Shaft To Rear Bearing (5.89-5.91mm)	1	5280044
62260M	Shim, A606 Output Shaft To Rear Bearing (5.92-5.94mm)	1	5280045
62260MA	Shim, A606 Output Shaft To Rear Bearing (5.95-5.97mm)	1	5280046
62260N	Shim, A606 Output Shaft To Rear Bearing (5.98-6.00mm)	1	5280047
62260NA	Shim, A606 Output Shaft To Rear Bearing (6.01-6.03mm)	1	5280048
62260P	Shim, A606 Output Shaft To Rear Bearing (6.04-6.06mm)	1	5280049
62261	Cup Race, A606 Case To Output Shaft (Rear)	1	
62263	Bearing, A606 Output Shaft To Case (Rear)	1	
62270	Shim, A606 Output Shaft To Drive Sprocket (2.64-2.84mm)	1	5280053
62270A	Shim, A606 Output Shaft To Drive Sprocket (2.85-3.05mm)	1	5280054
62270B	Shim, A606 Output Shaft To Drive Sprocket (3.06-3.26mm)	1	5280055
62270C	Shim, A606 Output Shaft To Drive Sprocket (3.27-3.47mm)	1	5280056
62270D	Shim, A606 Output Shaft To Drive Sprocket (3.48-3.68mm)	1	5280057
62270E	Shim, A606 Output Shaft To Drive Sprocket (3.69-3.89mm)	1	5280058
62270F	Shim, A606 Output Shaft To Drive Sprocket (3.90-4.10mm)	1	5280059
62270G	Shim, A606 Output Shaft To Drive Sprocket (4.11-4.31mm)	1	5280120
62273	Cup Race, A606 Pinion Bearing 1993-Up	1	4567293
62274	Bearing, A606 Pinion 1993-Up	1	4657292
62275	Ball Bearing, A606 Axle Shaft To Case (Sealed Type)	1	4539879
62276	Shim, A606 Pinion Head To Bearing (.681-.707mm)	1	4539677
62276A	Shim, A606 Pinion Head To Bearing (.708-.743mm)	1	4539678
62276B	Shim, A606 Pinion Head To Bearing (.735-.761mm)	1	4539679
62276C	Shim, A606 Pinion Head To Bearing (.762-.788mm)	1	4539680
62276D	Shim, A606 Pinion Head To Bearing (.789-.815mm)	1	4539681
62276E	Shim, A606 Pinion Head To Bearing (.816-.842mm)	1	4539682
62276F	Shim, A606 Pinion Head To Bearing (.843-.869mm)	1	4539683
62276G	Shim, A606 Pinion Head To Bearing (.870-.896mm)	1	4539684
62276H	Shim, A606 Pinion Head To Bearing (.897-.923mm)	1	4539685
62276HA	Shim, A606 Pinion Head To Bearing (.924-.950mm)	1	4539686
62276J	Shim, A606 Pinion Head To Bearing (.951-.977mm)	1	4539687
62276JA	Shim, A606 Pinion Head To Bearing (.978-1.004mm)	1	4539688
62276L	Shim, A606 Pinion Head To Bearing (1.005-1.031mm)	1	4539689
62276M	Shim, A606 Pinion Head To Bearing (1.032-1.058mm)	1	4539690
62276N	Shim, A606 Pinion Head To Bearing (1.059-1.085mm)	1	4539691
62276P	Shim, A606 Pinion Head To Bearing (1.086-1.112mm)	1	4539692
62276Q	Shim, A606 Pinion Head To Bearing (1.113-1.139mm)	1	4539693

© Whatever It Takes Transmission Parts. Inc.

62277	Shim, A606 Under Rear Pinion Shaft Bearing (3.53-3.55mm)	1	
62277A	Shim, A606 Under Rear Pinion Shaft Bearing (3.56-3.58mm)	1	
62277AA	Shim, A606 Under Rear Pinion Shaft Bearing (3.59-3.61mm)	1	
62277B	Shim, A606 Under Rear Pinion Shaft Bearing (3.62-3.64mm)	1	
62277BA	Shim, A606 Under Rear Pinion Shaft Bearing (3.65-3.67mm)	1	
62277C	Shim, A606 Under Rear Pinion Shaft Bearing (3.68-3.70mm)	1	
62277CA	Shim, A606 Under Rear Pinion Shaft Bearing (3.71-3.73mm)	1	
62277D	Shim, A606 Under Rear Pinion Shaft Bearing (3.74-3.76mm)	1	
62277DA	Shim, A606 Under Rear Pinion Shaft Bearing (3.77-3.79mm)	1	
62277E	Shim, A606 Under Rear Pinion Shaft Bearing (3.80-3.82mm)	1	
62277EA	Shim, A606 Under Rear Pinion Shaft Bearing (3.83-3.85mm)	1	
62277F	Shim, A606 Under Rear Pinion Shaft Bearing (3.86-3.88mm)	1	
62277FA	Shim, A606 Under Rear Pinion Shaft Bearing (3.89-3.91mm)	1	
62277G	Shim, A606 Under Rear Pinion Shaft Bearing (3.92-3.94mm)	1	
62277GA	Shim, A606 Under Rear Pinion Shaft Bearing (3.95-3.97mm)	1	
62277H	Shim, A606 Under Rear Pinion Shaft Bearing (3.98-4.00mm)	1	
62277HA	Shim, A606 Under Rear Pinion Shaft Bearing (4.01-4.03mm)	1	
62277HB	Shim, A606 Under Rear Pinion Shaft Bearing (4.04-4.06mm)	1	
62277HC	Shim, A606 Under Rear Pinion Shaft Bearing (4.07-4.09mm)	1	
62277J	Shim, A606 Under Rear Pinion Shaft Bearing (4.10-4.12mm)	1	
62277JA	Shim, A606 Under Rear Pinion Shaft Bearing (4.13-4.15mm)	1	
62277JB	Shim, A606 Under Rear Pinion Shaft Bearing (4.16-4.18mm)	1	
62277JC	Shim, A606 Under Rear Pinion Shaft Bearing (4.19-4.21mm)	1	
62277L	Shim, A606 Under Rear Pinion Shaft Bearing (4.22-4.24mm)	1	
62277LA	Shim, A606 Under Rear Pinion Shaft Bearing (4.25-4.27mm)	1	
62277M	Shim, A606 Under Rear Pinion Shaft Bearing (4.28-4.30mm)	1	
62277MA	Shim, A606 Under Rear Pinion Shaft Bearing (4.31-4.33mm)	1	
62277N	Shim, A606 Under Rear Pinion Shaft Bearing (4.34-4.36mm)	1	
62277NA	Shim, A606 Under Rear Pinion Shaft Bearing (4.37-4.39mm)	1	
62277P	Shim, A606 Under Rear Pinion Shaft Bearing (4.40-4.42mm)	1	
62277PA	Shim, A606 Under Rear Pinion Shaft Bearing (4.43-4.45mm)	1	
62277Q	Shim, A606 Under Rear Pinion Shaft Bearing (4.46-4.48mm)	1	
62277QA	Shim, A606 Under Rear Pinion Shaft Bearing (4.49-4.51mm)	1	
62277R	Shim, A606 Under Rear Pinion Shaft Bearing (4.52-4.54mm)	1	
62277RA	Shim, A606 Under Rear Pinion Shaft Bearing (4.55-4.57mm)	1	
62277S	Shim, A606 Under Rear Pinion Shaft Bearing (4.58-4.60mm)	1	
62277SA	Shim, A606 Under Rear Pinion Shaft Bearing (4.61-4.63mm)	1	
62277T	Shim, A606 Under Rear Pinion Shaft Bearing (4.64-4.66mm)	1	
62277TA	Shim, A606 Under Rear Pinion Shaft Bearing (4.67-4.69mm)	1	
62278	Race, A606 Drive Transfer Gear Bearing	1	
92278	Cup Race, A606 Rear Planet To Case 1993-Up(# 252)	1	4412234
62279	Cone Bearing, A606 Drive Transfer Gear To CAse 1993-Up	1	4412235
92279	Cone Bearing, A606 Presses On Rear Planet 1993-Up(# 251)	1	
62280	Race, A606 Driven Transfer Gear Bearing	1	4539863
62281	Bearing, A606 Driven Transfer Gear	1	4539862
62288	Cup Race, Differential To Retainer	1	3723569
62289	Bearing, A606 Differential Housing To Retainer	2	1790541
S92290AK	Shim Kit, A606 Differential Bearing Race (.005")(Fits Small Cup Race 2.480"OD)(10 Per Kit) Sonnax	1	39539-Z5
S92290BK	Shim Kit, A606 Differential Bearing Race (.005")(Fits Large Cup Race 2.880"OD)(10 Per Kit) Sonnax	1	

PART #	GASKETS & RUBBER COMPONENTS	QTY	REFERENCE #
62300	Gasket, A606 Bottom Pan (Cork)	1	
62310	Gasket, A606 Pump	1	4659126
32311	O-Ring, A606 Pump	1	4659945
92329	Gasket, A606 Low/Reverse Piston Retainer	1	4431649
S92329AK	Gasket / Seal Kit, A606 Low/Reverse Piston Retainer (Sonnax) Steel Gasket W/Rubber Grommet	1	
92330B	O-Ring, A606 Overdrive & Reverse Clutch (Inner) 1993-Up	1	5033158
92331B	Lip Seal, A606 Overdrive & Reverse Clutch (Outer) & Input Clutch Retainer (Outer)	2	4412875
92332A	D-Ring, A604 2nd-4th Clutch (Inner)	1	4659376
92333A	D-Ring, A606 2nd-4th Clutch (Outer)	1	4659374
92334AA	O-Ring, A606 Input Clutch Rear (.103") (Red) (Inner) 1993-Up	1	6502269
92334BA	O-Ring, A606 Input Clutch Front (.103) (Blue) (Inner) 1993-Up	1	6502271
92338A	D-Ring, A606 Low/Reverse Clutch (Inner) 1993-Up	1	4659856
92339A	D-Ring, A606 Low/Reverse Clutch (Outer) 1993-Up	1	4659855
92340	Lip Seal, A606 Underdrive Clutch (Inner) 1993-94	1	4377174
92340A	Lip Seal, A606 Underdrive Clutch (Inner) 1995-Up	1	4659391

© Whatever It Takes Transmission Parts. Inc.

PART #	GASKETS & RUBBER COMPONENTS (Continued)	QTY	REFERENCE #
62341	Lip Seal, A606 Underdrive Clutch (Outer) 1993-94	1	4412875
62341A	Lip Seal, A606 Underdrive Clutch (Outer) 1995-Up	1	4659056
92342	Seal, A606 2nd-4th Feed (Valve Body To Case)	1	4412291
62343A	O-Ring, A606 Differential Adjuster (Inner)	1	6502797
62343B	O-Ring, A606 Differential Adjuster (Outer)	1	6502452
92347C	Grommet, A606 PRNDL Switch To Case (Thin, 1.350"OD For Case Connector Hole) (Rubber) 1993-98	1	
92347CA	Grommet, A606 PRNDL Switch To Case (Thick, 1.420"OD For Case Connector Hole) (Rubber) 1999-Up	1	
92370A	O-Ring, A606 Input Speed-O Sensor (Small)	1	6501700
92370B	O-Ring, A606 Output Speed-O Sensor (Large)	1	6501701
44371A	O-Ring, A606 Filler Tube	1	6264902
62374	O-Ring, A606 Axle Shaft & Short Stub Shaft	2	6502363
92378	O-Ring, A606 Cooler By-Pass Valve	1	
92379	O-Ring, A606 Filter	1	4412844

PART #	TECHNICAL MANUALS	QTY	REFERENCE #
62400	Technical Manual, A606 (42LE)	1	
62400CB	Code Book, A606 (42LE)	1	
62400CB-2	Code Book, A604/A606 (41TE/42LE) (Spanish)	1	

PART #	ELECTRICAL COMPONENTS	QTY	REFERENCE #
62410	Sensor, A606 Neutral Safety / Manual Position (7 Prong) 1993-95 (Can Use 62410A)	1	
62410A	Sensor, A606 Neutral Safety / Manual Position (9 Prong) 1996-98 (Retro Fits The 62410)	1	4659492AC
62410B	Sensor, A606 Neutral Safety / Manual Position (9 Prong) 1999-Up	1	4659677AB
62420	Solenoid Pack, A606 Shift (Bolts To Valve Body) 1993-04	1	4539766
62424	Repair Kit, A606 Solenoid Pack 1993-02	1	
62424A	Repair Kit, A606 Solenoid Pack 2003-04	1	
92436	Speed Sensor, A606 Output (.928"OD Threads)	1	4800879
92438	Speed Sensor, A606 Input (.855"OD Threads)	1	4800878
62445	Wire Harness, A606 External	1	
92445CK	Repair Kit, A606 Wire Harness (Input & Output Speed Sensor Connector) With Heat Shrinks	1	

PART #	MISC. COMPONENTS	QTY	REFERENCE #
92484	Screened Orifice, A606 In Overdrive / Reverse Piston	1	4531903
62490	Vent, A606 Baffle (Tin Shield Under Chain For Case)	1	
62491	Vent Tube Assembly, A606 W/Vents (2 Per Assembly)	1	
62492	Vent Baffle, A606 (Tin Shield In Differential For Vent)	1	4593028

PART #	HARD PARTS	QTY	REFERENCE #
62500A	Pump, A606	1	
62510A	Pump Body W/Gears, A606 (25 Teeth Inner Gear)(.708" Thick Gears) 1993-99 (5 Bolts To Case) (With 2 Cutouts On Seal Side)	1	
62510B	Pump Body W/Gears, A606 (12 Teeth Inner Gear)(.495" Thick Gears) 2000-Up (5 Bolts To Case) (With 2 Cutouts On Seal Side)	1	
62520A	Stator, A606 (Pump Cover) 1993-Up (Fits Body With 25 Teeth Inner Gear)	1	
62520B	Stator, A606 (Pump Cover) 2000-Up (Fits Body With 12 Teeth Inner Gear)	1	

PART #	PUMP COMPONENTS	QTY	REFERENCE #
92530A	Pump Gears, A604 (25 Teeth Inner Gear)(.708" Thick) 1989-Up	1	
92540	By-Pass Valve, A606 (In Case Under Pump)	1	4539880
92540A	By-Pass Valve, A606 (Splices Into The Cooler Line)	1	
S92540-6	Plug, A606 By-Pass Valve (2 Per Kit) Sonnax	1	

PART #	HARD PARTS (Continued)	QTY	REFERENCE #
92554A	Drum, A606 Input Clutch Retainer 1990-96	1	4505623
92554AK	Drum Kit, A606 Input Clutch Retainer 1990-96 (Contains: # 860, 876 & (2) # 142)	1	5016198AA
92554B	Drum, A606 Input Clutch Retainer (Cast # 4446635) 1997-Up	1	4659935
92560A	Piston Kit, A606 Overdrive & Reverse Clutch (Contains: Snap Ring & Spring) 1993-Up	1	
92564	Piston Kit, A606 Underdrive Clutch 1993-Up	1	
92567	Piston Kit, A606 Low/Reverse Clutch (Piston/Spring/Snap Ring) 1993-Up	1	
92568	Piston Kit, A606 2-4 Clutch (Contains #630, 968, 978)	1	4883078

© Whatever It Takes Transmission Parts. Inc.

92568A	Piston Kit, A606 2-4 Clutch (Contains #630A, 968D, 978)(#630 Has A Locking Tab At 6:00 And A Feed Hole At 6:00)	1	
92570	Hub, A606 Overdrive & Reverse (1.140"OD Shaft) 1993-95	1	
92570A	Hub, A606 Overdrive & Reverse (1.160"OD Shaft) 1996-Up	1	4659993
92570K	Clutch Hub Kit, A606 Overdrive & Reverse (1.140"OD Shaft)(Contains: 2-4 Hub & Front Planet) 1993-95	1	4762712AC
92571	Hub, A606 Underdrive Clutch W/Solid Shaft	1	4431615
92574A	Hub, A606 Input Clutch (For 4 Ring Stator) 1993-Up	1	5241064
92578	Hub & Sun Gear, A606 2nd-4th Clutch (1.140"OD Bushing) 1993-95	1	4431622
92578A	Hub & Sun Gear, A606 2nd-4th Clutch (1.160"ID Bushing) 1996-Up	1	4659618AB
92582	Planet, A606 Front 1993-95	1	4567539
92582A	Planet, A606 Front (W/Heat Treated Splines) 1996-Up	1	4567539AB
62583	Planet Kit, A606 (With 4 Gear Rear Planet)(Contains: # 570, 578, 582, 594, 614, 584) 1993-Up	1	
62583B	Planet Kit, A606 (With 5 Gear Rear Planet)(Contains: # 570, 578, 582, 594, 614, 584) 1993-Up	1	
62584A	Planet, A606 Rear W/Output Shaft (4 Gear) 1993-Up	1	5014201AA
62584B	Planet, A606 Rear W/Output Shaft (5 Gear With .230" Thick Park Gear) 1993-Up	1	4659111
92594	Ring Gear, A606 Rear Planet	1	4799794
92614	Sun Gear, A606 Rear Planet	1	4377080
92630	Retainer, A606 2-4 Clutch Piston (.956" Thick)(Steel)(With Locking Tab At 6:00, The Feed Hole Is At 6:00)	1	
92630K	Retainer Kit, A606 2-4 Clutch Piston (Contains: 92968, 92232 & 92233)	1	4883078
92630A	Retainer, A606 2-4 Clutch Piston (.912" Thick)(Steel)(With Locking Tab At 6:00, The Feed Hole Is At 6:00)	1	
62670	Input Shaft, A606	1	4626452
62677	Shaft, A606 Axle (Goes Through Case)	1	4567216
62698	Oil Baffle, A606 For Rear Pinion Bearing	1	4593035
62700A	Chain, A606 (Transfer) Single Wide 1993-94	1	4539777
62700B	Chain, A606 (Late Double Type) 31 Links (.775") 1995-Up	1	4659190
62701	Chain Snubber, A606 Bolts To Case (Tan - Medium) 1993-94	1	
62701A	Chain Snubber, A606 Bolts To Case (Black - Thin) 1993-94	1	
62701B	Chain Snubber, A606 Bolts To Case (Green - Thick) 1993-94	1	
62701C	Chain Snubber, A606 Rubber Faced For Dual Chain 1995-Up	1	4778989
62705	Sprocket, A606 Drive (32 Teeth) (Single Type Chain) 1993-94	1	
62705B	Sprocket, A606 Drive (32 Teeth) (Dual Type Chain) 1995-Up	1	
62705BK	Sprocket & Chain Set, A606 (32 Teeth Drive / 33 Teeth Driven) 1995-Up (Dual Type W/Snubber)	1	
62706	Sprocket, A606 Driven (33 Teeth) (.770" Spline Length) 1993-94	1	
62706B	Sprocket, A606 Driven (33 Teeth) (.770" Spline Length) 1995-Up (Dual Chain Type)	1	4695834
62716A	Differential Housing, A606 Less Ring Gear	1	
62724	Retainer, A606 Differential Bearing W/Race (Screws In Aluminum Cover)	1	4539776
62725	Retainer, A606 Axle (W/Race, Aluminum) (Screws In Case)	1	4539890
62727	Wavy Washer, A606 Under Snap Ring On Sprocket (Takes 2)	2	4539901
62730K	Ring & Pinion Set, A606 (11 Teeth Pinion / 39 Teeth Ring Gear)	1	4567617
62740A	Valve Body, A606 (Less Solenoid Pack) 1993	1	
62740B	Valve Body, A606 (Less Solenoid Pack) 1994-95	1	
62740C	Valve Body, A606 (Less Solenoid Pack) (W/PRNDL Switch) PRNDL Switch Is Black Switch On Valve Body (Has No Coil Spring Under Case Connector) Less Park Rod Actuator (With 9 Round Pin Connector)	1	
62740CA	Valve Body, A606 (Less Solenoid Pack) (W/PRNDL Switch) (Cast # 4659463 Or 4659468) (PRNDL Switch Is Black Switch On Valve Body)(Has A Coil Spring Under Case Connector) (Less Park Rod Actuator)(With 9 Flat Blade Connector)	1	

PART #	VALVE BODY COMPONENTS	QTY	REFERENCE #
A12741A-5	Check Ball, Chrysler (All) (11/32"OD)(Torlon)	AR	
S92741C-6	Plugs, A606 Switch Valve (2 Plugs)(Non VLP Units)	1	
S92741CA-6	Plugs, A606 Switch Valve (Oversized)(Non VLP Units) (Use T-92835-RM) (Contains: 2 Oversized Replacement Plugs & 1 End Plug)	1	
T-92835-RM	Reamer, A606 For Oversize Plugs #S92741CA-6 (Sonnax)	1	
S92741CBSK	Valve Kit, 42LE Oversized TCC Control & Plunger Kit (Must Use T-F-92835-TL33 & T-VB-Fix) (Sonnax)	1	
T-F-92835-TL33	Reamer For S92741CBSK	1	
S92741CS-1	Valve, A606 Solenoid Switch (Oversize) (Sonnax) Must Use T-F-92835-TL Reamer	1	
T-F-92835-TL	Reamer, A606 For S92741CS-1	1	
A92741LA	Valve Repair, A606 Solenoid Switch (Without Tool)(Transgo) (Fits VB's With .453 Large Land Diameter)	1	
A92741LAK	Valve Repair, A606 Solenoid Switch (With Tool)(Transgo)(Fits VB's With .453 Large Land Diameter)	1	
S92741PK	Valve Kit, A606 Converter Regulator (2 Valves)(Sonnax)	1	
62749	Manual Valve, A606	1	

© Whatever It Takes Transmission Parts. Inc.

PART #	HARD PARTS (Continued)	QTY	REFERENCE #
62758	Differential Cover, A606 Retainer (Bolts To Case and Holds Differential In)	1	4567036
62759	Rear Cover, A606 (Chain Cover) (2 Bolt Mount)	1	4659477
62759A	Rear Cover, A606 (Chain Cover) (4 Bolt Mount)	1	
62760A	Case, A606 (3.3 L/3.5L) (3 3/8” Top Bolts)	1	
62760B	Case, A606 (2.5L/3.2 L) (2 3/8” Top Bolts)	1	

PART #	CASE COMPONENTS	QTY	REFERENCE #
S92494-2	Shield, A604 Dipstick Tube (Sonnax) Fits Cases With Filler Tubes That Extend Into The Case 1.25” Only	1	
92540	By-Pass Valve, A604 (In Case Under Pump)	1	4539880
S92540-6	Plug, A604 By-Pass Valve (2 Per Kit) Sonnax	1	
92540A	By-Pass Valve, A604 (Splices Into Cooler Line)	1	5252836

PART #	HARD PARTS (Continued)	QTY	REFERENCE #
62765	Pan, A606 Bottom	1	4539762
32775	Bolt, A606 Flex Plate To Converter	6	
92275	Nut, A606 Metric Converter	4	
62777K	Bolt Set, A606 Pump Body TO Case	1	
62778K	Bolt Set, A606 Stator To Pump	1	
62779K	Bolt Set, A606 Pan To Case	1	
62780K	Bolt Set, A606 Rear Cover To Case	1	
62782K	Bolt Set, A606 Valve Body To Case	1	
62785K	Bolt Set, A606 Differential Cover To Case	1	
62786K	Bolt Set, A606 Differential Carrier To Ring Gear	1	
62790K	Bolt Set, A606 Low/Reverse Piston Housing To Case	1	
62791	Bolt, A606 MLPS Sensor To Valve Body	1	6506245AA
62792	Bolt, A606 Vent Baffle To Case (Differential Vent)	1	
62793	Bolt, A606 Vent Baffle To Case (Under Chain)	1	
62794	Bolt, A606 Oiler Tube To Case (Chain Oiler)	1	
62795	Nut, A606 Output Shaft	1	6502476
62796	Nut, A606 Pinion Shaft	1	6502447
92860A	Snap Ring, A606 Holds Underdrive Pressure Plate (.076” Thick) (6 5/16”OD) 1993-Up	1	4567602
92860B	Snap Ring, A606 Holds Underdrive Pressure Plate In (.090” Thick)(6 5/16”OD) 1997-Up	1	
92860KB	Snap Ring Set, A606 (8 Pieces) 1997-Up (Contains: #860B, 861, 863A, 875, 885, 891, 877 & 82876A)	1	
92861	Snap Ring, A606 Overdrive Pressure Plate (Bottom) (.061” Thick) Wavy (6 7/8”OD)	1	4505621
92862	Snap Ring, A606 Holds Spring To Piston (.060” Thick) (5.325”OD)	1	4412203
92863	Snap Ring, A606 Holds Low/Reverse Pressure Plate In Case (.068” Thick) (7”OD)	1	4799858AA
92863A	Snap Ring, A606 Holds Low/Reverse Pressure Plate In Case (.076” Thick) (7”OD)	1	
92863B	Snap Ring, A606 Holds Low/Reverse Pressure Plate In Case (.088” Thick) (7”OD)	1	
92875	Snap Ring, A606 Holds Input Clutch Retainer In (.095” Thick) 2.595”OD (W/2 Eyelets)	1	6501812
92876A	Snap Ring, A606 Under The Underdrive Pressure Plate (.060” Thick) 1993-Up	1	4659980
92877	Snap Ring, A606 Holds Underdrive Retainer In (.077” Thick) 2.286”OD (W/2 Eyelets)	1	6501715
92880	Snap Ring, A606 Holds Input Shaft To Hub (.061” Thick) 1.030”OD (Wire Type)	1	6501702
92882	Snap Ring, A606 Front Planet To Rear Ring Gear (.061” Thick) (4.720”OD)	2	6035238
92883	Snap Ring, A606 Holds 2nd-4th Clutch Retainer In (.061” Thick) (7”OD)	1	4505591
92885	Snap Ring, A606 Under Low/Reverse Pressure Plate (Selective)	1	4412395
92891	Snap Ring, A606 Overdrive Pressure Plate (Top) (.069” Thick)	1	4531411
92892	Snap Ring, A606 Holds Reverse Pressure Plate In (.061” Thick)	1	4377195
92892A	Snap Ring, A606 Holds Reverse Pressure Plate In (.071” Thick)	1	4412871
92892B	Snap Ring, A606 Holds Reverse Pressure Plate In (.081” Thick)	1	4412872
92892C	Snap Ring, A606 Holds Reverse Pressure Plate In (.090” Thick)	1	4412872
92893	Snap Ring, A606 Holds Low/Reverse Piston In	1	6501853
62894	Snap Ring, A606 Holds Ball Bearing To Case	1	6502482
62894B	Snap Ring, A606 Holds Ball Bearing To Axle Shaft	1	
62895	Snap Ring, A606 C.V. Axle To Axle Shaft	2	4593012
62896	Snap Ring, A606 Holds Low/Reverse Accumulator In Case	1	6501695
62897	Horse Shoe Clip, A606 Holds Axle Shaft #677B In Differential	1	2853883
62898	Snap Ring, A606 Holds Sprocket	2	6502448
62930	Use 92950A	1	
92932	Use 92937	1	
92935	Accumulator Assembly, A606 Overdrive & Underdrive (W/1 Spring) 1989-Up	1	
92936	Spring, A606 Overdrive Accumulator 1989-95 (Also Fits A606 Underdrive Accumulator 1989-95)	1	
92936A	Spring, A606 Overdrive Accumulator 1996-Up (Also Fits A606 Underdrive Accumulator 1996-Up)	1	4471880

© Whatever It Takes Transmission Parts. Inc.

92937	Piston, A606 Overdrive/2-4/Underdrive Accumulator (Aluminum) 1989-Up (Takes Two 72191AT Teflon Rings)	1	4446620
S92937-1K	Sleeve Kit, A606 Overdrive/2-4/Low/Reverse/Underdrive Accumulator 1989-03 (Sonnax) (Contains: Piston, Sleeve, 2 Springs, 2 O-Rings, 2 Teflon Seals)(Restores OE Shifts)	1	
92937A	Piston, A606 Overdrive/2-4/Low/Reverse & Underdrive Accumulator (Bonded) 2004-Up	1-3	
92937K	Piston KIt, A606 Overdrive Accumulator With Rings 1989-Up (Also Fits 2-4 Accumulator and Underdrive Accumulator)	1	
S92937K	Sleeve Kit, A606 Overdrive/2-4/Low/Reverse/Underdrive Accumulator 1989-03 (Sonnax) (Contains: Piston, Sleeve, 2 Springs, 2 O-Rings, 2 Teflon Seals)(Restores OE Shifts)	1	
92937HDK	Piston Kit, A606 Overdrive Accumulator (Aluminum) With Rubber O-Rings (Southeast) (Also Fits A606 2-4 & Underdrive Accumulator)	1	
92945	Accumulator Assembly, A606 Low/Reverse	1	
92946	Spring, A606 Low/Reverse Accumulator (Outer)	1	4471880
92946B	Spring, A606 Low/Reverse Accumulator (Inner)	1	4567575
92947	Piston, A606 Low/Reverse Accumulator (Aluminum) 1989-Up	1	4446620
92949	Retainer, A606 Low/Reverse Accumulator (Aluminum) 1989-03	1	4431617
92949A	Retainer, A606 Low/Reverse Accumulator (Bonded) 2004-Up	1	
92950	Accumulator Assembly, A606 Underdrive (With 1 Spring) (Use 92935)	1	
92950A	Accumulator Assembly, A606 Overdrive & Underdrive (W/2 Springs)	1	
92951	Spring, A606 Overdrive Accumulator (Outer) (Fits 2 Spring Type)	1	4471880
92951B	Spring, A606 Overdrive Accumulator (Inner) (2 Spring Type)	1	
92952	Piston, A606 Overdrive Accumulator (Use 92937)	1	4446620
92957	Retainer, A606 Low/Reverse Clutch Piston (Tin) 2007-Up (2nd Design, The 3 Holes In A Row Are All The Same Size)(Replaces 1st Design)	1	4431648
92957A	Retainer, A606 Low/Reverse Clutch Piston (Tin) 2004-Up (3rd Design, The 3 Holes In A Row Has A Larger Middle Hole)(Retro Fits All Previous Designs)	1	4800255AA
92960	Piston, A606 Underdrive Clutch (W/Molded Rubber)	1	4431612
92960DK	Piston Kit, A606 (Contains: # 960, 967D, 968D) 2004-Up	1	
92961A	Piston, A606 Overdrive & Reverse Clutch (4 Lug Overdrive Pressure Plate)	1	5013476AA
92961AK	Piston Kit, A606 Overdrive & Reverse With Input Clutch Hub 1993-Up (Contains: Piston, Input Clutch Hub, # 574 and 2 O-Rings)	1	
92967	Piston, A606 (42LE) Low/Reverse Clutch (Aluminum)(1.055" Thick) 1989-03	1	4431672
92968	Piston, A606 (42LE) 2-4 Clutch (Aluminum)(.668" Thick) 1989-2003	1	4883078
92968D	Piston, A606 (42LE) 2-4 Clutch (Bonded) 2004-Up	1	
92970	Spring, A606 Underdrive Clutch Return (3.002"OD) (2.250" Tall)	1	4377177
92971	Spring, A606 Overdrive & Reverse Clutch Return (.063" Thick) 4.992"OD (8 Fingers)	1	4412202
92977	Spring, A606 Low/Reverse Clutch Return (.072" Thick)(5.390"OD)(8 Fingers) 1989-03	1	4412261
92978	Spring, A606 2nd-4th Clutch Return (.063" Thick) 6 1/2"OD (8 Fingers)	1	4412248
92980	Housing, A606 Underdrive Piston	1	4431610
62992	Shift Lever, A606 (External)	1	
62993	Shift Lever, A606 W/Rooster Comb (Internal)	1	
62994	Park Rod Actuator Assembly, A606 (.390" Wide Roller)	1	4431634
62995	Park Pawl Assembly, A606 (W/Rings & Pins)	1	4883505AA
62996	Cooler Line Fitting, A606	1	
62999	Chain Oiler Tube, A606 (1 Bolt)	1	4539904

© Whatever It Takes Transmission Parts. Inc.

000 Paper & Rubber Kit

002 Overhaul Kit

004 Master L/Steels Kit

006 Master W/Steels Kit

030 Bushing Kit

400 Technical Manual

A

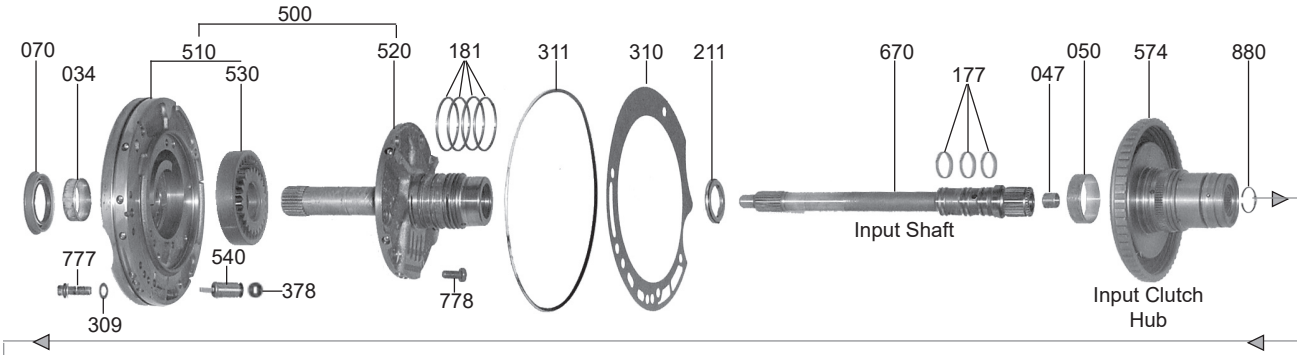

B

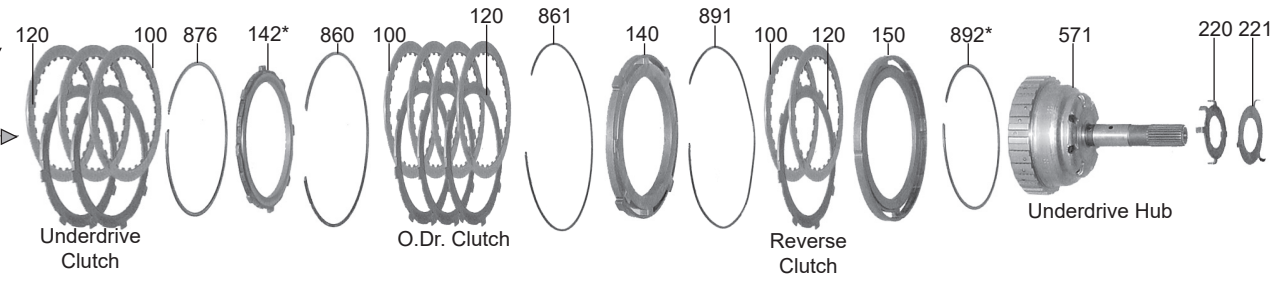

C

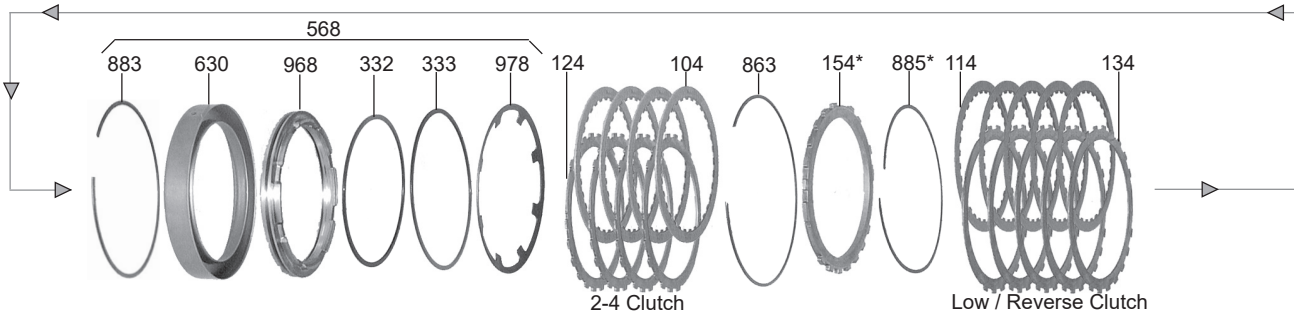

D

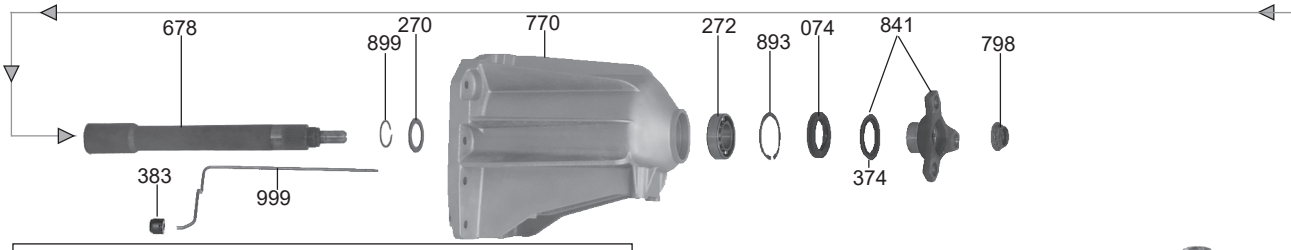

E

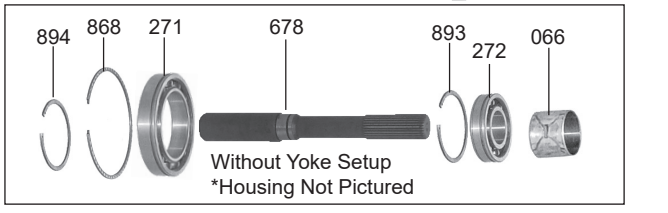

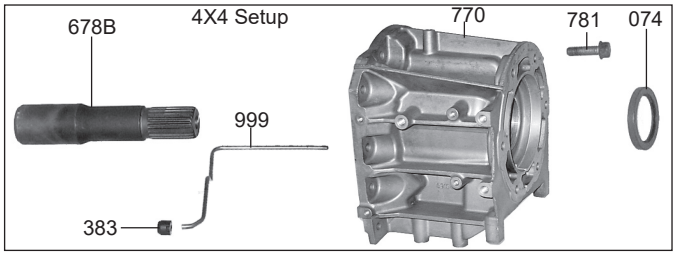

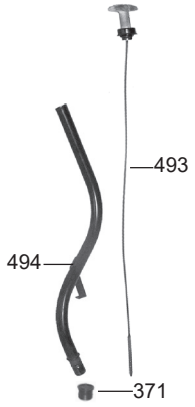

© Whatever It Takes Transmission Parts. Inc.

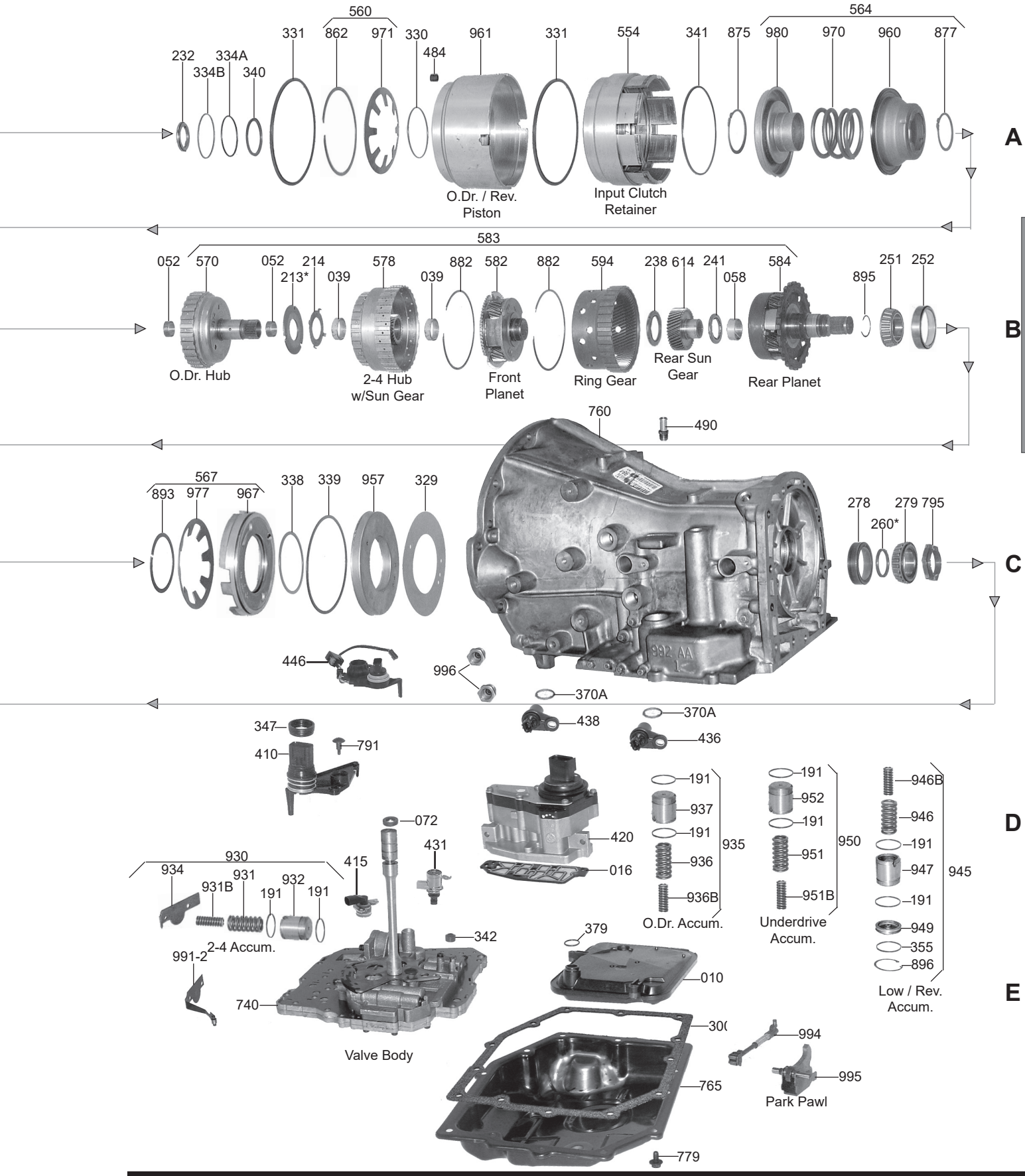

CHRYSLER

1-800-940-0197

© Whatever It Takes Transmission Parts. Inc.

PART #	PAPER & RUBBER KIT	QTY	REFERENCE #
82000A	Paper & Rubber Kit, 42RLE 4 Speed RWD 2003-Up	1	

PART #	OVERHAUL KIT	QTY	REFERENCE #
82001	Sub Kit, 42RLE 2003-Up	1	
82002A	Overhaul Kit, 42RLE 2003-Up (For 2003 Bonded Underdrive Piston Sell # 92960)(For 2004-Up Bonded Piston Kit Sell # 82960BK)	1	

PART #	MASTER L/STEELS KIT	QTY	REFERENCE #
82004A	Master L/Steels Kit, 42RLE 2003-Up (For 2003 Bonded Underdrive Piston Sell # 92960) (For 2004-Up Bonded Piston Kit Sell # 82960BK)	1	

PART #	MASTER W/STEELS KIT	QTY	REFERENCE #
82006A	Master W/Steels Kit, 42RLE 2003-Up (For 2003 Bonded Underdrive Piston Sell # 92960) (For 2004-Up Bonded Piston Kit Sell # 82960BK)	1	

PART #	FILTERS	QTY	REFERENCE #
82010A	Filter, 42RLE (RWD)(Plastic)(With 2 Bolt Holes)(With Oval Pick-Up) 2003-Up	1	52852913AB
92015	Screen, 42RLE Low/Reverse Piston Feed (Orifice)(Black)	1	
82016A	Filter/Plate, 42RLE Solenoid Assembly To Valve Body 2003-Up	1	3878313

PART #	BUSHINGS	QTY	REFERENCE #
92030A	Bushing Kit, 42RLE 2003-Up (For 2001-Up Sell 92047A Also)	1	
12034	Bushing, 42RLE Pump Body (Babbit) 2003-Up	1	2466796
92039A	Bushing, 42RLE Clutch Hub 2003-Up	1	
92047A	Bushing, 42RLE Input Shaft (Rear) (.605"OD) 2003-Up	1	
92050	Bushing, 42RLE Input Clutch Hub (Front) 2003-Up	1	4377170
S92050	Bushing, 42RLE Input Clutch Hub (Front) 2003-Up (Sonnax) (Has A Tighter Tolerances Than The OEM) Uses Tool # T-92003-TL	1	
T-92003-TL	Bushing Tool, 42RLE For S92050 (Sonnax)	1	
92052A	Bushing, 42RLE Overdrive Clutch Hub (.283" Tall) 2003-Up	1	4659617
S92052EA	Bushing, 42RLE Overdrive Clutch Hub (1 Piece)(Fits Hub With .937"ID) 2003-Up (Sonnax)	1	92004-L
S92052EB	Bushing, 42RLE Overdrive Clutch Hub (1 Piece)(Fits Hub With .941"ID) 2003-Up (Sonnax)	1	
92058	Bushing, 42RLE Rear Planet 2003-Up	1	4412230

PART #	METAL CLAD SEALS	QTY	REFERENCE #
12070A	Seal, 42RLE Front (With Flange) 2003-Up	1	
92072	Seal, 42RLE Linkage/Valve Body Stem Seal) (Rubber) 2003-Up	1	4412836
36074	Seal, 42RLE (Rear)(2.506"OD)(Without Boot)	1	
78074A	Seal, 42RLE (Rear)(2.445"OD)(1.610"ID)(No Boot, No Lip)96-Up(Also Fits 722.9 Rear 2004-Up) (Also Fits 42RLE(2WD Bolt On Yoke 2003-Up)Also Fits NSG 2WD Rear Seal	1	
36074B	Seal, 42RLE (Rear)(2.506"OD)(With Boot)	1	
12074J	Seal, 42RLE Extension Housing 4x4 (2.568"OD) 2003-Up	1	

PART #	FRICTION CLUTCH	QTY	REFERENCE #
92100A	Friction, 42RLE Underdrive & Reverse Clutch (.071") (Tan) 2003-Up	4	4505629
92100B	Friction, 42RLE Overdrive Clutch (.073") (High Energy) 2003-Up	2-6	4531678
A92100BPPK	Fiction/Steel Kit, 42RLE Overdrive Clutch (.073")(Hi-Energy) 2003-Up	1	
92104	Friction, 42RLE 2-4 Clutch (.086") (High Energy) 2003-Up	4	4377125
92114	Friction, 42RLE Low/Reverse Clutch (.072") (High Energy) 2003-Up	5	4567573

PART #	STEEL CLUTCH	QTY	REFERENCE #
92120	Steel, 42RLE Overdrive, Underdrive & Reverse Clutch (.068") 2003-Up	3-8	4659053
92124	Steel, 42RLE 2-4 Clutch (.101") 2003-Up	4	4659054
92134	Steel, 42RLE Low/Reverse Clutch (.067") 2003-Up	5	4659055

PART #	PRESSURE PLATES	QTY	REFERENCE #
82140A	Pressure Plate, 42RLE Overdrive Clutch (.342") 4 Teeth (4.530"ID) 2003-Up	1	
92140A	Pressure Plate, 42RLE Overdrive Clutch (4 Lugs)(4.530"ID) L1990-Up	1	4531556
92142B	Pressure Plate, 42RLE Underdrive Clutch (.235") 2003-Up	1	4723683

© Whatever It Takes Transmission Parts. Inc.

92142BA	Pressure Plate, 42RLE Underdrive Clutch (.245") 2003-Up	1	
92142C	Pressure Plate, 42RLE Underdrive Clutch (.255") 2003-Up	1	4723682
92150A	Pressure Plate, 42RLE Reverse Clutch (.355" Thick) At The Edge 2003-Up	1	4531905
92150B	Pressure Plate, 42RLE Reverse Clutch (.186" Thick) 2003-Up	1	4531925
92154D	Pressure Plate, 42RLE Low/Reverse Clutch (.250") 2003-Up	1	4897454AA

PART #	VALVE BODY KITS	QTY	REFERENCE #
T92167	Shift Kit, 42RLE 1989-Up (Transgo)	1	

PART #	SEALING RINGS	QTY	REFERENCE #
92177T	Ring, 42RLE Input Shaft (1.443"OD) (Teflon) 2003-Up	3	4446543
12179A	Ring, 42RLE Stator (2.062"OD) (Metal) (Seal Plated) 2003-Up	4	
82181A	Use 12179A	4	
92191	Ring, 42RLE Accumulator Non-Rotating (1.013"OD)(Graphite) 2003-Up	2-8	4446544
92191K	Ring Kit, 42RLE (8 Accumulator & 4 Stator Rings) 2003-Up	1	

PART #	WASHERS & BEARINGS	QTY	REFERENCE #
92211	Bearing W/Races, 42RLE Stator To Input Drum (1.713"ID) 2003-Up	1	4412209
82213	Race, 42RLE Overdrive Hub To 2-4 Hub (6 Inner Teeth) (3 Slot)	1	
	(Use 92213 Thru 92213J)		
92213	Race, 42RLE Overdrive Hub To 2-4 Hub (.039") (3 Slot) 2003-Up	1	4431662
92213A	Race, 42RLE Overdrive Hub To 2-4 Hub (.048") (3 Slot) 2003-Up	1	4431663
92213B	Race, 42RLE Overdrive Hub To 2-4 Hub (.057") (3 Slot) 2003-Up	1	4431664
92213C	Race, 42RLE Overdrive Hub To 2-4 Hub (.066") (3 Slot) 2003-Up	1	4431665
92213D	Race, 42RLE Overdrive Hub To 2-4 Hub (.074") (3 Slot) 2003-Up	1	4431666
92213E	Race, 42RLE Overdrive Hub To 2-4 Hub (.083") (3 Slot) 2003-Up	1	4431667
92213F	Race, 42RLE Overdrive Hub To 2-4 Hub (.091") (3 Slot) 2003-Up	1	4431668
92213G	Race, 42RLE Overdrive Hub To 2-4 Hub (.100") (3 Slot) 2003-Up	1	4431669
92213H	Race, 42RLE Overdrive Hub To 2-4 Hub (.109") (3 Slot) 2003-Up	1	4431670
92213HA	Race, 42RLE Overdrive Hub To 2-4 Hub (.117") (3 Slot) 2003-Up	1	4431671
92213J	Race, 42RLE Overdrive Hub To 2-4 Hub (.126") (3 Slot) 2003-Up	1	4431672
82214A	Washer, 42RLE Overdrive Hub To 2-4 Hub (4 Tab) (1.335"ID) 2003-Up	1	
	Can Use 92214		
82220A	Washer, 42RLE Underdrive Hub To Overdrive Hub (5 Tab) .050" Thick (1.335"ID)	1	
	2003-Up (Can Use 92220)		
82221A	Race, 42RLE Underdrive Hub To Overdrive Hub (3 Tab) .031" Thick (1.180"ID)	1	
	2003-Up (Can Use 92221)		
92232	Bearing, 42RLE Rear Sun Gear To Rear Planet (#241) (1.790"OD) 2003-Up	1	4467262
82238A	Bearing W/Races, 42RLE Front Planet To Rear Sun Gear (.139" Thick) (2.292"OD)	1	
	2003-Up (Can Use 92238)		
82241A	Use 92232	1	
82251A	Use 92279	1	
82252A	Use 92278	1	
62260	Shim, 42RLE Output Shaft To Rear Bearing (5.17-5.19mm)	1	5280020
62260A	Shim, 42RLE Output Shaft To Rear Bearing (5.20-5.22mm)	1	5280021
62260AA	Shim, 42RLE Output Shaft To Rear Bearing (5.23-5.25mm)	1	5280022
62260B	Shim, 42RLE Output Shaft To Rear Bearing (5.26-5.28mm)	1	5280023
62260BA	Shim, 42RLE Output Shaft To Rear Bearing (5.29-5.31mm)	1	5280024
62260C	Shim, 42RLE Output Shaft To Rear Bearing (5.32-5.34mm)	1	5280025
62260CA	Shim, 42RLE Output Shaft To Rear Bearing (5.35-5.37mm)	1	5280026
62260D	Shim, 42RLE Output Shaft To Rear Bearing (5.38-5.40mm)	1	5280027
62260DA	Shim, 42RLE Output Shaft To Rear Bearing (5.41-5.43mm)	1	5280028
62260E	Shim, 42RLE Output Shaft To Rear Bearing (5.44-5.46mm)	1	5280029
62260EA	Shim, 42RLE Output Shaft To Rear Bearing (5.47-5.49mm)	1	5280030
62260F	Shim, 42RLE Output Shaft To Rear Bearing(5.50-5.52mm)	1	5280031
62260FA	Shim, 42RLE Output Shaft To Rear Bearing (5.53-5.55mm)	1	5280032
62260G	Shim, 42RLE Output Shaft To Rear Bearing (5.56-5.58mm)	1	5280033
62260GA	Shim, 42RLE Output Shaft To Rear Bearing (5.59-5.61mm)	1	5280034
62260H	Shim, 42RLE Output Shaft To Rear Bearing (5.62-5.64mm)	1	5280035
62260HA	Shim, 42RLE Output Shaft To Rear Bearing (5.65-5.67mm)	1	5280036
62260HB	Shim, 42RLE Output Shaft To Rear Bearing (5.68-5.70mm)	1	5280037
62260HC	Shim, 42RLE Output Shaft To Rear Bearing (5.71-5.73mm)	1	5280038
62260J	Shim, 42RLE Output Shaft To Rear Bearing (5.74-5.76mm)	1	5280039
62260JA	Shim, 42RLE Output Shaft To Rear Bearing (5.77-5.79mm)	1	5280040
62260JB	Shim, 42RLE Output Shaft To Rear Bearing (5.80-5.82mm)	1	5280041
62260JC	Shim, 42RLE Output Shaft To Rear Bearing (5.83-5.85mm)	1	5280042
62260L	Shim, 42RLE Output Shaft To Rear Bearing (5.85-5.88mm)	1	5280043

© Whatever It Takes Transmission Parts. Inc.

PART #	WASHERS & BEARINGS (Continued)	QTY	REFERENCE #
62260LA	Shim, 42RLE Output Shaft To Rear Bearing (5.89-5.91mm)	1	5280044
62260M	Shim, 42RLE Output Shaft To Rear Bearing (5.92-5.94mm)	1	5280045
62260MA	Shim, 42RLE Output Shaft To Rear Bearing (5.95-5.97mm)	1	5280046
62260N	Shim, 42RLE Output Shaft To Rear Bearing (5.98-6.00mm)	1	5280047
62260NA	Shim, 42RLE Output Shaft To Rear Bearing (6.01-6.03mm)	1	5280048
62260P	Shim, 42RLE Output Shaft To Rear Bearing (6.04-6.06mm)	1	5280049
82270A	Washer, 42RLE(2WD) Shaft to Ball Bearing (.098"Thick)(1.268"ID)(1.762"OD)(Bolt On Yoke) 2003-Up	1	
82271AA	Ball Bearing, 42RLE 2WD Output Shaft To Extension Housing (.627" Thick)(2.440"OD)(1.260"ID) (Cast # INA 140 981 01 25)(Fits 12" Long Extension Housing) 2003-Up	1	
82271AB	Ball Bearing, 42RLE 2WD Output Shaft To Extension Housing (.667" Thick)(2.835"OD)(1.375"ID) (Cast # SKF 6207 TN9/C3)(Fits 11 1/2" Long Extension Housing) 2003-Up	1	
82272A	Ball Bearing, 42RLE (2WD) Rear Output Shaft To Extension Housing (.668" Thick)(2.83.4"OD) (1.375"ID) 2003-Up	1	
82272AA	Ball Bearing, 42RLE(2WD) Rear Output Shaft To Extention Housing (.629"Thick)(2.441"OD) (1.260"ID)(9 Balls)(Bolt On Yoke) 2003-Up	1	
32273	Cup Race, 42RLE Case To Output Shaft (#278) 2003-Up	1	4567022
32274	Bearing, 42RLE Case To Output Shaft (#279) 22 Rollers (1.497"ID) 2003-Up	1	4567025
32274K	Bearing/Race Kit, 42RLE Case To Output Shaft (#278 & #279) 22 Rollers 2003-Up	1	
92278	Cup Race, 42RLE Rear Planet To Case (#252) 2003-Up	1	4412234
82278A	Use 32273 Or 32274K	1	
92279	Cone Bearing, 42RLE Presses On Rear Planet (#251) 2003-Up	1	4412235
82279A	Use 32274 Or 32274K	1	

PART #	GASKETS & RUBBER COMPONENTS	QTY	REFERENCE #
82300A	Gasket, 42RLE Bottom Pan 2003-Up	1	
92309	Gasket/Washer, 42RLE Pump Bolt 2003-Up	5	
92310	Gasket, 42RLE Pump 2003-Up	1	4412844
32311	O-Ring, 42RLE Pump 2003-Up	1	4659945
92329	Gasket, 42RLE Low/Reverse Piston Retainer 2003-Up	1	4431649
92330B	O-Ring, 42RLE Overdrive/Reverse Clutch (Inner) 2003-Up	1-2	5033158
92331B	Lip Seal, 42RLE Overdrive/Reverse Clutch (Outer) & Input Clutch Retainer (Outer) 03-Up	1-2	4412875
92332A	D-Ring, 42RLE 2-4 Clutch (Inner) 2003-Up	1	4659376
92333A	D-Ring, 42RLE 2-4 Clutch (Outer) 2003-Up	1	4659374
92334AA	O-Ring, 42RLE Input Clutch Rear (.103") Red (Inner) 2003-Up	1	6502269
92334BA	O-Ring, 42RLE Input Clutch Front (.103") Blue (Inner) 2003-Up	1	6502271
92338A	D-Ring, 42RLE Low/Reverse Clutch (Inner) 2003-Up	1	4659856
92339A	D-Ring, 42RLE Low/Reverse Clutch (Outer) 2003-Up	1	4659855
92341A	Lip Seal, 42RLE Underdrive Clutch (Outer) 2003-Up	1	4531408
92347CA	Grommet, 42RLE PRNDL Switch To Case (Thick 1.420"OD For Case Connector Hole) (Rubber) 2003-Up	1	
82371A	Use 72371A.	1	
72371A	Boot, 42RLE Filler Tube 2003-Up	1	
82374A	Dust Deflector, 42RLE(2WD) Seal To Yoke (Rubber Coated)(.184"Thick)(1.638"ID) 2003-Up	1	
82383A	Boot, 42RLE Case To Oil Tube (.470" Long)(.565"OD)(Rubber)(2WD/4x4) 2003-Up	1	
92379	O-Ring, 42RLE Filter 2003-Up	1	4412844

PART #	TECHNICAL MANUALS	QTY	REFERENCE #
82400A	Technical Manual, 42RLE 4 Speed RWD 2003-Up	1	

PART #	ELECTRICAL COMPONENTS	QTY	REFERENCE #
62410B	Sensor, 42RLE Nuetral Safety/Manual Position (9 Prong) 2003-Up	1	
82415A	Switch, 42RLE Pressure Transducer 2006-Up	1	
82420A	Solenoid Pack, 42RLE Shift (4 Bolts To Valve Body) 2003-Up	1	4800171AA
92431C	Solenoid, 42RLE EPC 2006-Up	1	
82436A	Speed Sensor, 42RLE Output (3 1/2" Long) (2 Blade Connector) (Has An Extended Tip) 2003-Up	1	52854001AA
72438A	Speed Sensor, 42RLE Input Speed Sensor 2003-Up	1	4799061AB
82446A	Harness, 42RLE Variable Line Pressure 2006-Up	1	
82483A	Plug, 42RLE Case (Presses In Top Rear Of Case) 2003-Up	1	
92484	Screened Orifice, 42RLE In Overdrive/Reverse Piston 2003-Up	1	4531903

© Whatever It Takes Transmission Parts. Inc.

PART #	MISCELLANEOUS COMPONENTS	QTY	REFERENCE #
82490A	Vent, 42RLE Case 2003-Up (Can Use 92996)	1	
44490	Case Vent Tube, 42RLE	1	

PART #	HARD PARTS	QTY	REFERENCE #
82500A	Use 62520B & 92510A or 62520B & 92510	1	
92510	Pump Body W/Gears, 42RLE (25 Teeth Inner Gear)(.708" Thick) 2003-Up (5 Bolts To Case) (With 2 Cutouts In Gasket Area)(Can Use 92510A)	1	
92510A	Pump Body W/GEars, 42RLE (12 Teeth Inner Gear)(.495" Thick) 2003-Up	1	
62520B	Stator, 42RLE (Pump Cover) (Fits Body With 12 Teeth Inner Gear)	1	

PART #	PUMP COMPONENTS	QTY	REFERENCE #
92530B	Pump Gear Set, 42RLE (12 Teeth Inner Gear) (.495" Thick) 2003-Up	1	
92540	By-Pass Valve, 42RLE (In Case Under Pump) 2003-Up	1	4539880

PART #	HARD PARTS (Continued)	QTY	REFERENCE #
92554B	Drum, 42RLE Input Clutch Retainer (Cast # 4446635) 2003-Up	1	4659935
92560A	Drum, 42RLE Input Clutch Retainer (Cast # 4446635) 2003-Up	1	
92564	Piston Kit, 42RLE Underdrive Clutch 2003-Up	1	
82567A	Piston Kit, 42RLE Low/Reverse Clutch (1.150" Thick Piston) 2003-Up	1	
82568A	Piston Kit, 42RLE 2-4 Clutch 2003-Up	1	
92568	Piston Kit, 42RLE 2-4 Clutch (Contains #630, 968, 978)	1	
92568A	Piston Kit, 42RLE 2-4 Clutch (Contains #630A, 968D, 978)(#630 Has A Locking Tab At 6:00 And A Feed Hole At 6:00)	1	
82570A	Hub, 42RLE Overdrive & Reverse (Has Round Bottom Grooves Where The Square Teeth Frictions Ride) (Can Use 92570A)	1	
92570A	Hub, 42RLE Overdrive & Reverse (1.160"OD Shaft) 2003-Up	1	4559993
92571	Hub, 42RLE Underdrive Clutch With Solid Shaft 2003-Up	1	4431615
92574A	Hub, 42RLE Input Clutch (For 4 Ring Stator) 2003-Up	1	
82578A	Hub & Sungear, 42RLE 2-4 Clutch (1.160"ID Bushing) (Has Round Bottom Grooves Where The Square Teeth Frictions Ride) (Can Use 92578A)	1	
92578A	Hub & Sun Gear, 42RLE 2nd-4th Clutch (1.160"ID Bushing) 2003-Up	1	4659618AB
92582A	Planet, 42RLE Front (With Heat Treated Splines) 2003-Up	1	4567539AB
82583AA	Planet Kit, 42RLE (5 Gear Rear Planet With .360" Thick Park Gear)(Contains: #570, 578, 582, 594, 614, 584) 2003-Up	1	
82583AAC	Planet Kit, 42RLE (5 Gear Rear Planet With .230" Thick Park Gear)(Contains: # 570, 578, 582, 594, 614, 584) 2003-Up (This Is An A604 Rear Planet Converted To Fit The 42RLE)	1	
82584A	Planet, 42RLE Rear (5 Gear With .230" Thick Park Gear) 2003-Up	1	
82584AA	Planet, 42RLE Rear (5 Gear With .360" Thick Park Gear) 2003-Up	1	
82584AAC	Planet, 42RLE Rear (5 Gear With .230" Thick Park Gear) 2003-Up (This Is An A604 Rear Planet Converted To Fit The 42RLE)	1	
92594	Ring Gear, 42RLE Rear Planet 2003-Up	1	4799794
92614	Sun Gear, 42RLE Rear Planet 2003-Up	1	4377080
82630A	Use 92630	1	5102880AA
92630	Retainer, 42RLE 2-4 Clutch Piston (.956" Thick)(Steel) With Locking Tab At 6:00, The Feed Hole Is At 6:00	1	
92630A	Retainer, 42RLE 2-4 Clutch Piston (.912" Thick)(Steel) With Locking Tab At 6:00, The Feed Hole Is At 6:00	1	
62670	Input Shaft, 42RLE (10 7/8" Long) 2003-Up	1	4626452
82678A	Shaft, 42RLE Output 2WD (13 3/8" Long)(Bolt On Yoke) 2003-Up	1	
82678AA	Shaft, 42RLE Outout 2WD (12 7/8" Long) 2003-Up	1	
82678B	Shaft, 42RLE Output 4x4 (7 1/8" Long) With Threaded Hole In The Rear Of The Shaft 2003-Up	1	52852915AA
62740CA	Valve Body, 42RLE (Less Solenoid Pack) With PRNDL Switch (Cast # 4659463 or 4659468) (PRNDL Switch Is Black Switch On Valve Body) Has A Coil Spring Under Case Connector (Less Park Rod Actuator) (With 9 Flat Blade Connectors) 2003-05	1	52854169AA
82740AA	Valve Body, 42RLE (Without Solenoid Pack Or EPC Solenoid) (Uses 2 Case Connectors) 2006-Up	1	

PART #	VALVE BODY COMPONENTS	QTY	REFERENCE #
A12741A-5	Check Ball, Chrysler (All) (11/32"OD) (Torlon)	AR	
S92741C-6	Plugs, 42RLE Switch Valve (2 Plugs)(Non VLP Units)	1	
S92741CA-6	Plugs, 42RLE Switch Valve (Oversized)(Non VLP Units)(Use T-92835-RM)(Contains 2 Oversized Replacement Plugs & 1 End Plug)	1	

© Whatever It Takes Transmission Parts. Inc.

PART #	VALVE BODY COMPONENTS (Continued)	QTY	REFERENCE #
S92741CB-6	Plugs, 42RLE Switch Valve (Oversized)(VLP Units)(Use T-92835-RM22)	1	
T-92835-RM22	Reamer 42RLE For S92741CB-6	1	
S92741CK	Valve Kit, 42RLE TCC Regulator (Oversized)(Contains Valve & Spring)(Sonnax)(Must Use T-F-92835-TL37)	1	
T-F-92835-TL37	Tool Kit For S92741CK (Contains Reamer, Jig & Guide Pin)(Sonnax)	1	
S92741CS-1	Valve, 42RLE Solenoid Switch (Oversize) (Sonnax) Must Use T-F-92835-TL Reamer	1	
T-F-92835-TL	Reamer, For S92741CS-1	1	
S92741CSK	Valve Kit, 42RLE Solenoid Switch (.453"OD)(Oversize)(Sonnax) (Contains: Oversize Valve, Valve Plugs, End Plug)(Must Use T-F-92835-TL31)	1	
T-F-92835-TL31	Reamer For S92741CSK	1	
S92741CASK	Valve Kit, 42RLE Solenoid Switch (.420"OD)(Oversize)(Sonnax)(Contains: Oversize Valve, Valve Plugs, End Plug)(Must Use T-F-92835-TL32)	1	
T-F-92835-TL32	Reamer For S92741CASK	1	
S92741CBSK	Valve Kit, 42RLE Oversized TCC Control & Plunger Valve Kit (Must Use T-F-92835-TL33 & T-VB-FIX)	1	
T-F-92835-TL33	Reamer For S92741CBSK	1	
A92741LA	Valve Repair, A606 Solenoid Switch (Without Tool)(Transgo) (Fits VB's With .453 Large Land Diameter)	1	
A92741LAK	Valve Repair, A606 Solenoid Switch (With Tool)(Transgo)(Fits VB's With .453 Large Land Diameter)	1	

PART #	HARDPARTS (Continued)	QTY	REFERENCE #
82760A	Case, 42RLE (Double Starter At 3:00 & 9:00)(1.420"ID Case Connector Hole) 2003-06	1	5101881AA
82760AA	Case, 42RLE (Double Starter At 3:00 & 9:00)(1.420"ID Case Connector Hole, 1.130"ID EPC Solenoid Connector Hole) 2006-Up	1	
82760B	Case, 42RLE (3 3/8" Top Bolts)(Starter At 3:00)(1.420"ID Case Connector Hole) 2003-Up	1	
82760BA	Case, 42RLE (3 3/8" Top Bolts)(Starter At 3:00)(1.130"ID Case Connector Hole) 2003-Up	1	
82760C	Case, 42RLE (6" Top Bolts)(Starter At 7:00)(1.420"ID Case Connector Hole) 2003-Up	1	
82765A	Pan, 42RLE Bottom (13 Bolts) 2003-Up	1	52852912AB
82770A	Extension Housing, 42RLE 2WD (12" Long)(3 Bolt Bottom Mount)(Cast # 52852987) 2003-Up	1	
82770AA	Extension Housing, 42RLE 2WD (11 1/2" Long)(3 Bolt Bottom Mount)(Cast # 52852993AA) (Bolt On Yoke) 2003-Up	1	
82770B	Extension Housing, 42RLE 4x4 (7 5/8" Long) (Cast # 52854195 AB) 2003-Up	1	52852986AB
82770BA	Extension Housing, 42RLE 4x4 (7 5/8" Long)(Cast # 52854185 AA) 2003-Up	1	
92777K	Bolt Set, 42RLE Pump To Case (5 Pieces) 2003-Up	1	
92778K	Bolt Set, 42RLE Pump Body To Stator (6 Pieces) 2003-Up	1	
82779AK	Bolt Set, 42RLE Bottom Pan (13 Pieces) 2003-Up (Can Use 92279K)	1	
82781AK	Bolt Set, 42RLE Extension Housing (11 Pieces) 2003-Up	1	
82782AK	Bolt Set, 42RLE Valve Body To Case (13 Pieces) 2003-Up	1	
62791	Bolt, 42RLE MPLS Sensor To Valve Body 2003-Up	1	6506245AA
82792AK	Bolt Set, 42RLE 2-4 Accumulator Cover (2 Pieces) 2003-Up (Use 82793AK)	1	
82793AK	Bolt Set, 42RLE Filter To Valve Body (2 Pieces) 2003-Up (Also Fits 42RLE 2-4 Accumulator Cover To Valve Body)	1	
62795	Nut, 42RLE Output Shaft 2003-Up	1	6502476
82798A	Nut, 42RLE(2WD) Output Shaft To Yoke (12 Point)(.475Thick)(1.548"OD) 2003-Up	1	
44839	Magnet, 42RLE Pan (Rectangular) 2003-Up	1	
82841A	Yoke, 42RLE(2WD) Output Shaft (3 Bolt)(1 11/16"Long) 2003-Up	1	
82841AA	Yoke, 42RLE(2WD) Output Shaft (4 Bolt) 2003-Up	1	
82841AB	Yoke, 42RLE(2WD) Output Shaft (Round Shape w/ 8 Bolt) 2003-Up	1	
92860B	Snap Ring, 42RLE Holds Underdrive Pressure Plate In (.090" Thick)(6 5/16"OD) 1997-Up	1	
92860K	Snap Ring Set, 42RLE (21 Pieces) 2001-On	1	
92861	Snap Ring, 42RLE Overdrive Pressure Plate (Bottom) .061" Thick (Wavy) (6 7/8"OD) 2003-Up	1	4505621
92862	Snap Ring, 42RLE Holds Spring To Piston (.060" Thick) (5.325"OD) 2003-Up	1	4412203
92863	Snap Ring, 42RLE Holds Low/Reverse Pressure Plate In Case (.068" Thick)(7"OD)	1	
82863A	Snap Ring, 42RLE Holds Low/Reverse Clutch Pressure Plate In Case (.076" Thick) (7"OD)(Oval Shaped) 2003-Up (Can Use 92863A)	1	4799858AA
92863A	Snap Ring, 42RLE Holds Low/Reverse Pressure Plate In Case (.076" Thick)(7"OD)	1	
92863B	Snap Ring, 42RLE Holds Low/Reverse Pressure Plate In Case (.076" Thick)(7"OD)	1	
92875	Snap Ring, 42RLE Holds Input Clutch Retainer In (.095" Thick) 2.595"OD (With 2 Eyelets) 2003-Up	1	6507226AA
82876A	Snap Ring, 42RLE Under The Underdrive Pressure Plate (.076" Thick) (5.955"OD) 2003-Up	1	4412307
92877	Snap Ring, 42RLE Holds Underdrive Retainer In (.077" Thick) 2.286"OD (With 2 Eyelets) 2003-Up	1	6501715
92880	Snap Ring, 42RLE Holds Input Shaft To Hub (.061" Thick) 1.030"OD (Wire Type)	1	6501702

© Whatever It Takes Transmission Parts. Inc.

92882.....Snap Ring, 42RLE Front Planet To Rear Ring Gear (.061" Thick) 4.720"OD 1 6035238
.....2003-Up
82883A .....Snap Ring, 42RLE Holds 2-4 Clutch Retainer In (.065" Thick) (7"OD) 2003-Up 1 4505591
92885.....Snap Ring, 42RLE Under Low/Reverse Clutch Pressure Plate (.038" Thick).....1 .....
92891.....Snap Ring, 42RLE Overdrive Pressure Plate (Top) (.069" Thick) 2003-Up 1 4531411
92892.....Snap Ring, 42RLE Holds Reverse Pressure Plate In (.061" Thick) 2003-Up 1 4377195
92892A .....Snap Ring, 42RLE Holds Reverse Pressure Plate In (.071" Thick) 2003-Up 1 4412871
92892B .....Snap Ring, 42RLE Holds Reverse Pressure Plate In (.081" Thick) 2003-Up 1 4412872
92892C .....Snap Ring, 42RLE Holds Reverse Pressure Plate In (.090" Thick) 2003-Up 1 4412873
92893.....Snap Ring, 42RLE Holds Low/Reverse Piston In (.062" Thick) (3.485"OD) 2003-Up 1 6501853
82894A .....Snap Ring, 42RLE Holds Front Output Shaft Bearing #271 To Output Shaft (2WD)(.079" Thick)
.....(2.326"OD) 2003-Up .....1 .....
82895A .....C-Clip, 42RLE Output Shaft Retainer (.135" Thick) (1.095"OD) 2003-Up .....1 .....52852916AA
82897A .....Snap Ring, 42RLE Holds Front Output Shaft Bearing #897 To Extension Housing (2WD).....
.....(.094" Thick)(4.132"OD) 2003-Up .....1 .....
82897AA.....Snap Ring, 42RLE 2WD Holds Bearing #271 In Extension Housing (.077" Thick)(2.605"OD)
.....(Fits 12" Long Extension Housing)(With 2 Eyelets) 2003-Up.....1 .....
82897AB.....Snap Ring, 42RLE 2WD Holds Bearing #271 To Output Shaft (.095" Thick)(1.580"OD)
.....(Fits 11 1/2" Long Extension Housing)(With 2 Eyelets) 2003-Up.....1 .....
82898A .....Snap Ring, 42RLE Holds Rear Output Shaft Bearing #272 To Extension Housing (2WD)
.....(.061" Thick)(3.013"OD) 2003-Up .....1 .....
82898AA.....Snap Ring, 42RLE Holds Bearing #272 To Extention Housing (0.77"Thick)(2.577"OD)(2 Eyelets)
.....2003-Up .....1 .....
82899A .....Snap Ring, 42RLE(2WD) Holds Washer To Bearing (.058"Thick)(1.374"OD)(Bolt On Yoke)
.....2003-Up .....1 .....
82930.....Use 92950A.....1 .....
82932.....Use 92937.....1 .....
82931.....Use 92951 or 92951B .....1 .....
82935.....Use 92950A.....1 .....
82936.....Use 92951 or 92951B .....1 .....
92937.....Piston, 42RLE Overdrive/2-4/Underdrive Accumulator (Aluminum) 2003-Up (Takes
.....Two 72191AT Teflon Rings) .....1-3.....4446620
S92937-1K.....Sleeve Kit, 42RLE Overdrive, 2-4, Low/Reverse, Underdrive Accumulator 1989-03 (Sonnax)
.....(Contains: Piston, Sleeve, 2 O_Rings, 2 Teflon Seals)(Firmer Shifts Than OE).....1 .....
92937A .....Piston, 42RLE Overdrive/2-4/Low/Reverse & Underdrive Accumulators (Bonded)
.....2004-Up .....1-4.....
S92937K.....Sleeve Kit, 42RLE Overdrive, 2-4, Low/Reverse, Underdrive Accumulator 1989-03 (Sonnax)
.....(Contains: Piston, Sleeve, 2 Springs, 2 O-Rings, 2 Teflon Rings)(Restores OE Shifts) .....1 .....
92937HDK.....Piston, 42RLE Overdrive, 2-4 & Underdrive Accumulator (Aluminum) 2003 (With Rubber
.....O-Rings) (Southeast) .....1-3.....
92945.....Accumulator Assembly, 42RLE Low/Reverse 2003-Up .....1 .....
92946.....Spring, 42RLE Low/Reverse Accumulator (Outer) 2003-Up.....1 .....
92946B .....Spring, 42RLE Low/Reverse Accumulator (Inner) 2003-Up.....1 .....
92947.....Piston, 42RLE Low/Reverse Accumulator (Aluminum) 2003-Up .....1 .....
92949.....Retainer, 42RLE Low/Reverse Accumulator 2003-Up (Aluminum).....1 4431617
92949A .....Retainer, 42RLE Low/Reverse Accumulator 2004-Up (Bonded) .....1 .....
92950A .....Accumulator Assembly, 42RLE Overdrive, Underdrive & 2-4 Accumulator .....1-3.....
.....(With 2 Springs) 2003-Up
92951.....Spring, 42RLE Overdrive, Underdrive & 2-4 Accumulator (Outer) 2003-Up .....1-3.....4471880
92951B .....Spring, 42RLE Overdrive, Underdrive & 2-4 Accumulator (Inner) 2003-Up.....1-3.....
82952.....Use 92937.....1 .....
92957.....Retainer, 42RLE Low/Reverse Clutch Piston (Tin) 1989-03 (2nd Design, The 3 Holes In A
.....Row Are All The Same Size)(Replaces The 1st Design).....1 4431648
92957A .....Retainer, 42RLE Low/Reverse Clutch Piston (Tin) 2004-Up (3rd Design, The 3 Holes In A
.....Row Has A Larger Middle Hole)(Retro Fits All Previous Designs) .....1 .....4800255AA
92960.....Piston, 42RLE Underdrive Clutch (With Molded Rubber) 2003-Up 1 4431612
82960BK.....Piston Kit, 42RLE (Contains: 92960, 82967B, 92968D) 2004-Up.....1 .....
92961.....Piston, 42RLE Overdrive/Reverse Clutch (8 Lug Overdrive Pressure Plate) 2003-Up.....1-2.....5013476
82967A .....Piston, 42RLE Low/Reverse Clutch (Aluminum) (1.150" Thick) 2003 .....1 .....
82967B .....Piston, 42RLE Low/Reverse Clutch (Bonded)(1.152" Thick)(Cast # 4800261AA) 2004-Up.....1 .....
92968.....Piston, 42RLE 2-4 Clutch (.668" Thick)(Aluminum) 2003-Up 1 4883078
92968D .....Piston, 42RLE 2-4 Clutch (Bonded)(.665" Thick) 2004-Up .....1 .....
92970.....Spring, 42RLE Underdrive Clutch Return (3.002"OD) (2.250" Tall) 2003-Up 1 4377177
92971.....Spring, 42RLE Overdrive & Reverse Clutch Return (.063" Thick) (4.992"OD)(8 Fingers)
.....2003-Up .....1-2.....4412202
92977.....Spring, 42RLE Low/Reverse Clutch Return (.072" Thick) (5.390"OD)(8 Fingers)
.....2003 Only.....1 4412261
82977B .....Spring, 42RLE Low/Reverse Clutch Return (.075" Thick)(5.715"OD)(10 Fingers)
.....2004-Up .....1 .....
92978.....Spring, 42RLE 2-4 Clutch Return (.063" Thick) (6 1/2"OD) (8 Fingers) 2003-Up 1 4412248

© Whatever It Takes Transmission Parts. Inc.

PART #	HARDPARTS (Continued)	QTY	REFERENCE #
92980	Housing, 42RLE Underdrive Piston 2003-Up	1	4431610
82994A	Park Rod Actuator, 42RLE (.490” Wide Roller) 2003-Up	1	52852956AA
82995A	Park Pawl Assembly, 42RLE (With .380”OD Pin) 2003-Up	1	
92966	Case Vent, 42RLE	1	
82996A	Fitting, 42RLE Cooler Line (Screw-In Type) (24mm Hex Head) 2003-Up	2	
82999A	Oil Tube, 42RLE 4x4 Case To Extension Housing 2003-Up	1	52854177AA
82999AA	Oil Tube, 42RLE 2WD Case To Extension Housing (For 12” Long Extension Housing) 2003-Up	1	
82999AB	Oil Tube, 42RLE 2WD Case To Extension Housing (For 11 1/2” Long Extension Housing) (Bolt On Yoke) 2003-Up	1	

© Whatever It Takes Transmission Parts. Inc.

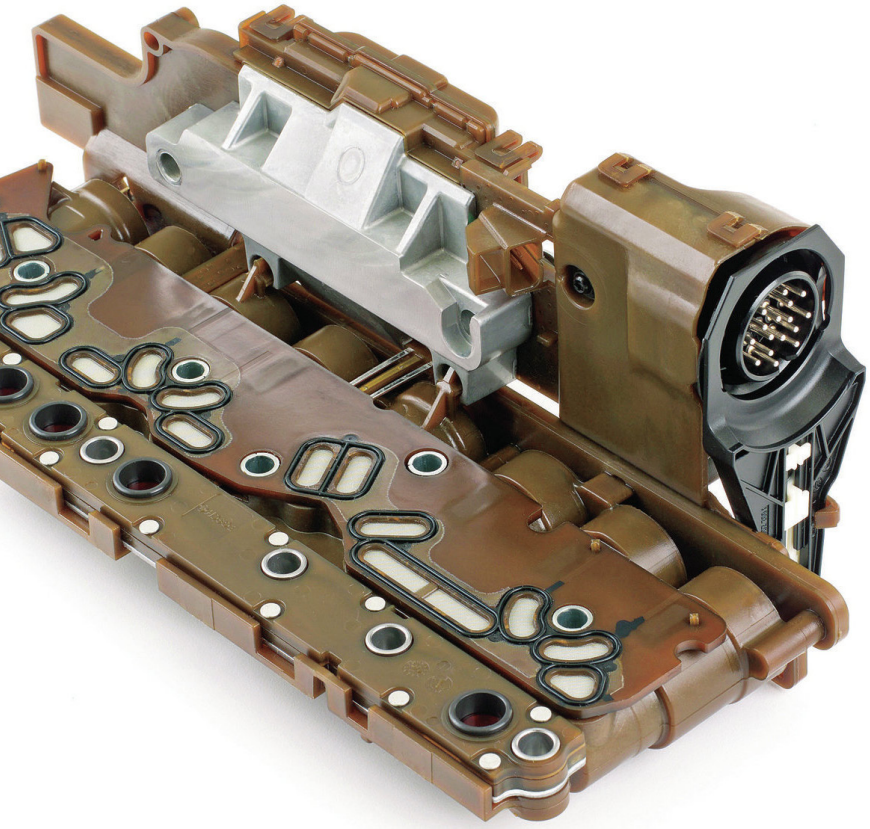

TEHCMs

Original Equipment Transmission
Hydraulic Control Modules

Your ACDelco Source

Take control of your electronics inventory.

TECHMs are single-unit modules containing solenoids, pressure switches, connectors and a microprocessor found in GM six-speed 6T30/40/45/50/70/75 and 6L45/50/80/90 automatic transmissions representing over 7 million 2006-current model year GM cars, trucks and crossovers.

Toledo DRIVELINE®

The Electronic Specialists.

©Toledo Driveline. All rights reserved.
All trademarks are owned by their respective companies.

toledodriveline.com

002 Overhaul Kit
004 Master L/ Steels Kit
030 Bushing Kit
119 Friction Module

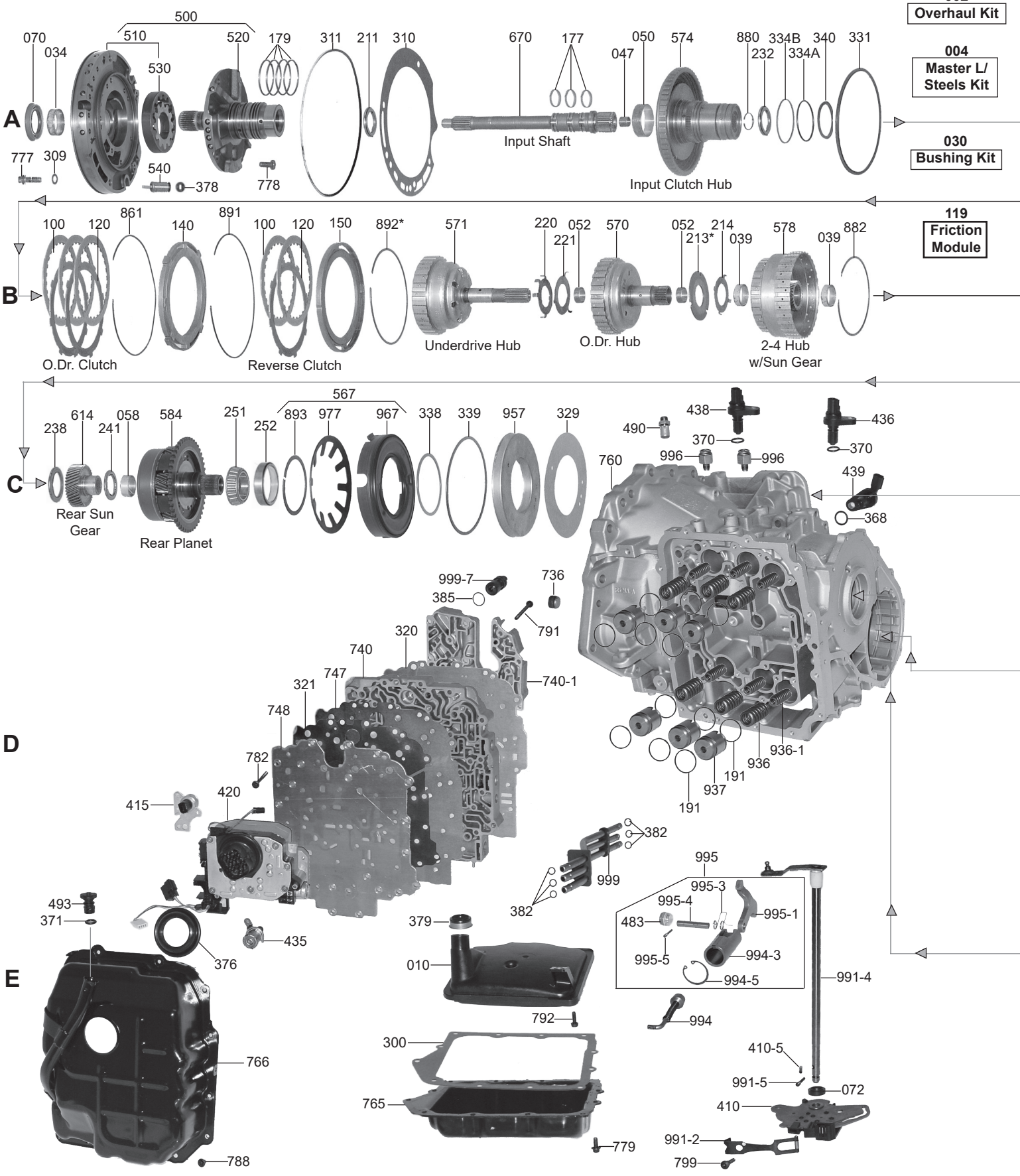

© Whatever It Takes Transmission Parts. Inc.

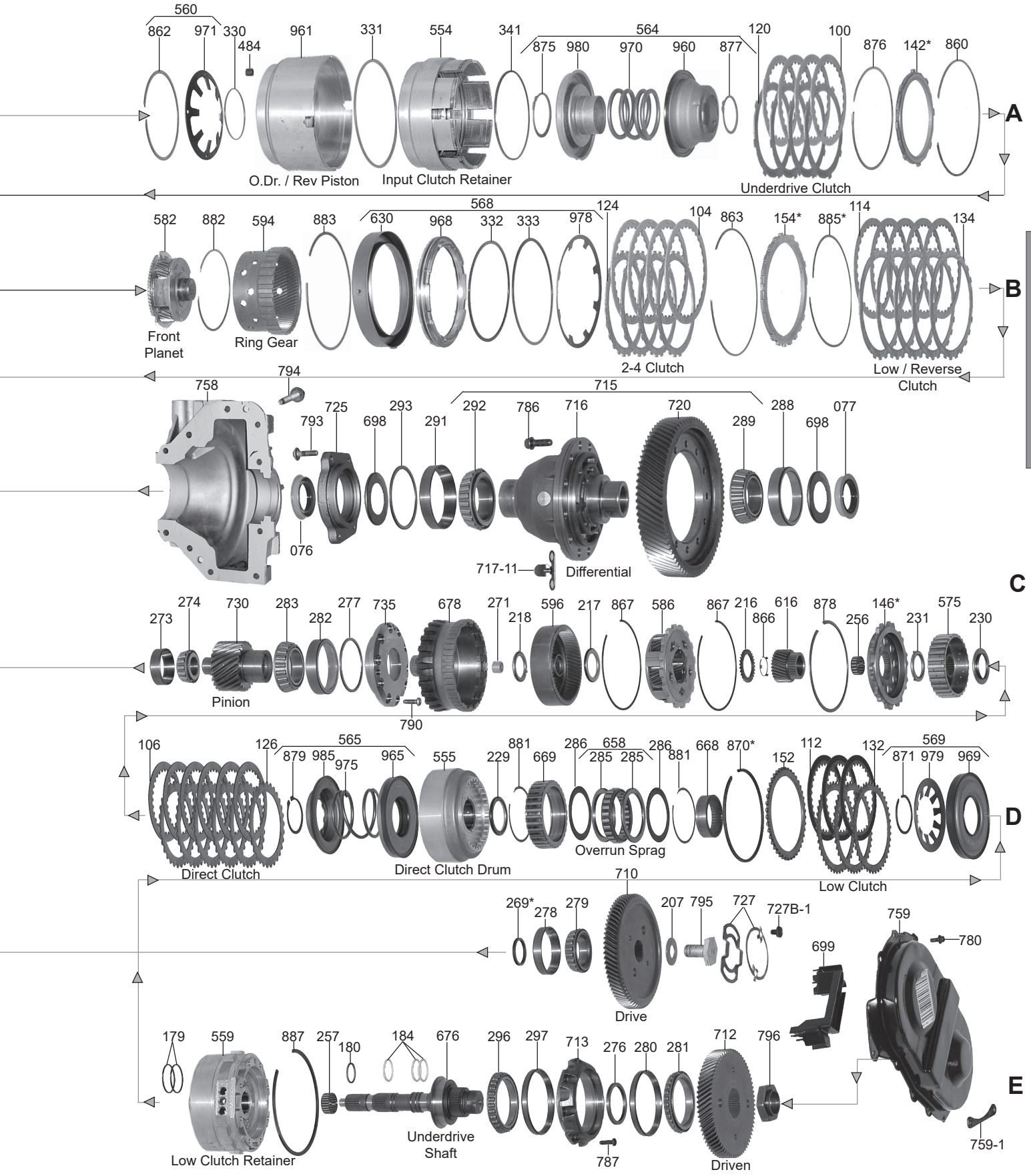

© Whatever It Takes Transmission Parts. Inc.

PART #	OVERHAUL KITS	QTY	REFERENCE #
262002A	Overhaul Kit, 62TE (W/Out Pan Gasket) 2007-Up (Transtec)	1	

PART #	MASTER L/STEELS KIT	QTY	REFERENCE #
262004A	Master L/Steels Kit, 62TE (W/Out Pan Gasket) 2007-Up (Transtec)	1	

PART #	MASTER W/STEELS KIT	QTY	REFERENCE #
262006A	Master W/Steels Kit, 62TE (W/Out Pan Gasket) 2007-Up (For Bonded Pistons Sell 262960AK)	1	

PART #	FILTERS	QTY	REFERENCE #
262010A	Filter, 62TE 2007-Up	1	

PART #	BUSHINGS	QTY	REFERENCE #
262030A	Bushing Kit, 62TE 2007-Up (8 Bushings)	1	
262034A	Bushing, 62TE Pump Body (1.500"ID)(With 2 Square Notches)(Babbit) 2007-Up (Can Use 12034)	1	
12034	Bushing, 62TE Pump Body (Babbit)	1	
92039A	Bushing, 62TE 2-4 Clutch Hub 2007-Up	1	
92047A	Bushing, 62TE Input Shaft (Rear)(.605"OD) 2007-Up	1	
92047A	Bushing, 62TE Input Shaft (Rear)(Bronze)(.605"OD) 2007-Up	1	
92050	Bushing, A604 Input Clu Hub (Front)89-Up	1	
S92050	Bushing, 62TE Input Clutch Hub (Front) 2007-Up (Sonnax)(Has A Tighter Tolerance Than The OEM)(Must Use Tool T-92003-TL)	1	
T-92003-TL	Bushing Tool, 62TE (For S92050)(Sonnax)	1	
92052A	Bushing, 62TE Overdrive Drum Clutch Hub (.283"Tall) 2007-Up	2	
92052EA	Bushing, 62TE Overdrive Drum Clutch Hub (1 Piece)(Fits Hub W/.937"ID) 2007-Up	2	
92052EB	Bushing, 62TE Overdrive Drum Clutch Hub (1 Piece)(Fits Hub W/.941"ID) 2007-Up	2	
92058	Bushing, 62TE Rear Planet 2007-Up	1	

PART #	METAL CLAD SEALS	QTY	REFERENCE #
92070AA	Seal, 62TE Front (W/Flange)(.283"Thick) 2007-Up	1	
262072A	Seal, 62TE Manual Lever (.890"OD)(.620"ID) 2007-Up	1	
32074	Seal, 62TE (Both Axles)(2.290"OD)	2	
262076A	Use 32074	1-2	
262076AA	Seal, 62TE Axle (4x4)(Passengers Side)(2.900"OD) 2007-Up	1	
262077A	Use 32074	1	

PART #	FRICTIONS	QTY	REFERENCE #
92100A	Friction, 62TE Underdrive & Reverse Clutch (.071")(Tan) 2007-Up	2-9	
92100B	Friction, 62TE Overdrive Clutch (.073")(Hi-Energy) 2007-Up	2-9	
A92100BPPK	Friction/Steel Kit, 62TE Overdrive Clutch (.073")(Hi-Energy) 2007-Up	1	
92104	Friction, 62TE 2-4 Clutch (.086")(Hi-Energy) 2007-Up	4	
262106A	Friction, 62TE Direct Clutch (.061")(29 Internal Teeth)(4.465"OD)(1 Sided Friction) 2007-Up	6	
262112A	Friction, 62TE Low Clutch (.074")(31 Teeth)(4.770"OD) 2007-Up	3	
92114	Friction, 62TE Low/Reverse Clutch (.072")(Hi-Energy) 2007-Up	5	
262119A	Friction Module, 62TE 2007-Up	1	

PART #	STEELS	QTY	REFERENCE #
92120	Steel, 62TE Underdrive & Reverse Clutch (.068")(8 Teeth) 2007-Up	1-5	
262120A	Steel, 62TE Overdrive Clutch (.078")(8 Teeth) 2007-Up	3	
262124A	Steel, 62TE 2-4 Clutch (.099")(16 Teeth)(5.256"ID) 2007-Up	4	
262126A	Friction, 62TE Direct Clutch (.063")(30 External Teeth)(3.630"ID)(1 Sided Friction) 2007-Up	6	
262132A	Steel, 62TE Low Clutch (.068"Thick)(42 Teeth)(4.110"ID) 2007-Up	3	
262134A	Steel, 62TE Low/Reverse Clutch (.067")(16 Teeth)(5.256"ID) 2007-Up	5	

PART #	PRESSURE PLATES	QTY	REFERENCE #
92140A	Pressure Plate, 62TE Overdrive Clutch (4 Lug) 2007-Up	1	
92142AK	Pressure Plate Kit, 62TE Underdrive Clutch (.215") 2007-Up (W/92860A Snap Ring)	1	
92142B	Pressure Plate, 62TE Underdrive Clutch (.235") 2007-Up	1	
92142BK	Pressure Plate Kit, 62TE Underdrive Clutch (.235") 2007-Up (W/92860A Snap Ring)	1	
92142BA	Pressure Plate, 62TE Underdrive Clutch (.245") 2007-Up	1	

© Whatever It Takes Transmission Parts. Inc.

92142BAK ..... Pressure Plate Kit, 62TE Underdrive Clutch (.245") 2007-Up (W/92140A & 92860A) 1
92142C ..... Pressure Plate, 62TE Underdrive Clutch (.255") 2007-Up 1
92142CK ..... Pressure Plate Kit, 62TE Underdrive Clutch (.255") 2007-Up (W/92860A Snap Ring) 1
92142DK ..... Pressure Plate Kit, 62TE Underdrive Clutch (.275") 2007-Up (W/92860A Snap Ring) 1
262146A ..... Reaction Plate, 62TE Direct Clutch (Top)(SEI)(10 Double OuterTeeth)(W/Splined ID) 2007-Up 1
92150A ..... Pressure Plate, 62TE Reverse Clutch (.335"Thick At The Edge) 2007-Up 1
92150B ..... Pressure Plate, 62TE Reverse Clutch (.186"Thick At The Edge) 2007-Up 1
262152A ..... Pressure Plate, 62TE Low Clutch (.128")(42 Teeth)(4.120"ID) 2007-Up 1
262154A ..... Pressure Plate, 62TE Low/Reverse Clutch (.232")(16 Teeth)(5.237"ID) 2007-Up 1
262154AA ..... Pressure Plate, 62TE Low/Reverse Clutch (.242")(16 Teeth)(5.237"ID) 2007-Up 1
262154AB ..... Pressure Plate, 62TE Low/Reverse Clutch (.252")(16 Teeth)(5.237"ID) 2007-Up 1
262154AC ..... Pressure Plate, 62TE Low/Reverse Clutch (.262")(16 Teeth)(5.237"ID) 2007-Up 1
262154AD ..... Pressure Plate, 62TE Low/Reverse Clutch (.272")(16 Teeth)(5.237"ID) 2007-Up 1

PART #	SHIFT KITS	QTY	REFERENCE #

T262165A ..... Shift Kit, 62TE Drop-in PR, TCC valves (TransGo) 1

PART #	SEALING RINGS	QTY	REFERENCE #

262175A ..... Ring Kit, 62TE 2007-Up 1
92177T ..... Ring, 62TE Input Shaft (1.443"OD)(Teflon) 2007-Up 1
12179A ..... Ring, 62TE Stator (2.062" OD)(Metal)(Seal Plated)(Teflon) 2007-Up 1
262179AT ..... Ring, 62TE Low Clutch Retainer To Direct Clutch Drum (.077"Thick)(1.545"OD)(Teflon) 2007-Up 2
262180AT ..... Ring, 62TE Underdrive Shaft (.080"Thick)(1.110"OD) 2007-Up (Teflon) 1
92181TK ..... Ring Kit, 62TE Stator Support (Updated)(2.062"OD)(Teflon)(4 Per Kit) 2007-Up 1
262184AT ..... Ring, 62TE Underdrive Shaft (.080"Thick)(1.175"OD)(Solid)Teflon) 2007-Up 3
92191 ..... Ring, 62TE Accumulator (1.013" OD) 2007-Up (Graphite) 12

PART #	WASHERS & BEARINGS	QTY	REFERENCE #

92207 ..... Washer, 62TE Output Gear (Under Bolt) 2007-Up 1
92211 ..... Bearing W/Races, 62TE Stator To Input Drum (1.713"OD) 2007-Up 1
92213 ..... Race, 62TE Overdrive Hub To 2-4 Hub (.039")(3 Slot) 2007-Up 1
92213A ..... Race, 62TE Overdrive Hub To 2-4 Hub (.048")(3 Slot) 2007-Up 1
92213B ..... Race, 62TE Overdrive Hub To 2-4 Hub (.057")(3 Slot) 2007-Up 1
92213C ..... Race, 62TE Overdrive Hub To 2-4 Hub (.066")(3 Slot) 2007-Up 1
92213D ..... Race, 62TE Overdrive Hub To 2-4 Hub (.074")(3 Slot) 2007-Up 1
92213E ..... Race, 62TE Overdrive Hub To 2-4 Hub (.083")(3 Slot) 2007-Up 1
92213F ..... Race, 62TE Overdrive Hub To 2-4 Hub (.091")(3 Slot) 2007-Up 1
92213G ..... Race, 62TE Overdrive Hub To 2-4 Hub (.100")(3 Slot) 2007-Up 1
92213H ..... Race, 62TE Overdrive Hub To 2-4 Hub (.109")(3 Slot) 2007-Up 1
92213HA ..... Race, 62TE Overdrive Hub To 2-4 Hub (.117")(3 Slot) 2007-Up 1
92213J ..... Race, 62TE Overdrive Hub To 2-4 Hub (.126")(3 Slot) 2007-Up 1
92213JA ..... Race, 62TE Overdrive Hub To 2-4 Hub (.135")(3 Slot) 2007-Up 1
262214A ..... Washer, 62TE Overdrive Hub To 2-4 Hub (4 Tab)(1.330"ID) 2007-Up 1
262216AA ..... Spacer, 62TE Underdrive Sun Gear (.109")(28 Teeth) 2007-Up 1
262216AB ..... Spacer, 62TE Underdrive Sun Gear (.117")(28 Teeth) 2007-Up 1
262216AC ..... Spacer, 62TE Underdrive Sun Gear (.125")(28 Teeth) 2007-Up 1
262216AD ..... Spacer, 62TE Underdrive Sun Gear (.133")(28 Teeth) 2007-Up 1
262216AE ..... Spacer, 62TE Underdrive Sun Gear (.141")(28 Teeth) 2007-Up 1
262216AF ..... Spacer, 62TE Underdrive Sun Gear (.149")(28 Teeth) 2007-Up 1
262216AG ..... Spacer, 62TE Underdrive Sun Gear (.157")(28 Teeth) 2007-Up 1
262216AH ..... Spacer, 62TE Underdrive Sun Gear (.165")(28 Teeth) 2007-Up 1
262216AI ..... Spacer, 62TE Underdrive Sun Gear (.173")(28 Teeth) 2007-Up 1
262216AJ ..... Spacer, 62TE Underdrive Sun Gear (.181")(28 Teeth) 2007-Up 1
262216AK ..... Spacer, 62TE Underdrive Sun Gear (.189")(28 Teeth) 2007-Up 1
262216AL ..... Spacer, 62TE Underdrive Sun Gear (.197")(28 Teeth) 2007-Up 1
262216AM ..... Spacer, 62TE Underdrive Sun Gear (.205")(28 Teeth) 2007-Up 1
262217A ..... Bearing W/Races, 62TE Underdrive Ring Gear To Sun Gear Spacer (.138"Thick)(1.910"OD)(1.283"ID) 2007-Up 1
262218A ..... Use 262231A 1
92220 ..... Washer, 62TE Underdrive Hub To Overdrive Hub (5 Tab)(.050"Thick)(1.260"ID) 2007-Up 1
92220K ..... Washer Set, 62TE Underdrive Hub To Overdrive Hub (Contains:92220 & 92221) 2007-Up 1
92221 ..... Race, 62TE Underdrive Hub To Overdrive Hub (3 Tab)(.031"Thick)(1.265"ID) 2007-Up 1
262229A ..... Bearing W/Races, 62TE Low Clutch Retainer To Direct Drum (.158"Thick)(2.155"OD)(1.582"ID) 2007-Up 1
262230A ..... Bearing W/Races, 62TE Direct Clutch Drum To Direct Clutch Hub (.136"Thick)(2.033"OD)(1.365"ID) 2007-Up 1

© Whatever It Takes Transmission Parts. Inc.

PART #	WASHERS & BEARINGS (Continued)	QTY	REFERENCE #
262231A	Bearing W/Races, 62TE Direct Clutch Hub To Reaction Plate (.148"Thick)(1.710"OD)(1.153"ID) (3 Outer Tabs) 2007-Up (Also Fits 62TE Ring Gear To Output Shaft # 218)	1-2	
92232	Bearing W/Races, 62TE Input Drum To Underdrive Hub)(1.790"OD) 2007-Up (Also Fits 62TE Rear Sun Gear To Rear Planet # 241 1994-Up)	1-2	
262251A	Use 32274	1	
32274	Bearing, 62TE Rear Planet # 251)(22 Rollers)(1.497" ID) 2007-Up	1	
262252A	Use 32273	1	
32273	Cup Race, 62TE Rear Planet # 252 2007-Up	1	
262256A	Caged Needle Bearing, 62TE Underdrive Shaft (Front)(.425"Thick)(1.045"OD)(18 Needles) 2007-Up	1	
262257A	Caged Needle Bearing, 62TE Underdrive Shaft To Low Clutch Drum (.498"Thick)(1.157"OD) (24 Needles) 2007-Up	1	
262269A	Use 92276	1	
262271A	Caged Needle Bearing, 62TE Underdrive Pilot To Output Shaft (.500"ID)(16 Needles) (Cast # J-88) 2007-Up	1	
262273A	Cup Race, 62TE Pinion To Case (2.045"OD)(Cast # NP402533) 2007-Up	1	
262274A	Cone Bearing, 62TE Pinion To Case (15 Roller)(.985"ID)(Cast # NP2266726) 2007-Up	1	
32274K	Bearing/Race Kit, 62TE Rear Planet # 251 & # 252 (22 Rollers) 2007-Up	1	
T262275A	Axle Stabilizer, 62TE (Teckpak)	1	
262276A	Shim, 62TE Driven Transfer Gear To Underdrive Shaft (.171"Thick)(2.310"OD)(1.915"ID) 2007-Up	1	
92276B	Shim, 62TE Drive Transfer Gear # 269 (.144") 2007-Up	1	
92276C	Shim, 62TE Drive Transfer Gear # 269 (.148") 2007-Up	1	
92276D	Shim, 62TE Drive Transfer Gear # 269 (.152") 2007-Up	1	
92276E	Shim, 62TE Drive Transfer Gear # 269 (.158") 2007-Up	1	
262277A	Shim, 62TE Pinion Cup Race # 282 To Cover (Selective) (2.990"OD)(2.680"ID) 2007-Up	1	
92278	Cup Race, 62TE Drive Transfer Gear To Case # 278 2007-Up	1	
92279	Cone Bearing, 62TE Drive Transfer Gear # 279 2007-Up	1	
262280A	Cup Race, 62TE Driven Transfer Gear To Underdrive Shaft Retainer (.373"Thick)(3.625"OD) (Cast # NP736810) 2007-Up (Also Fits 62TE # 297)	1-2	
262281A	Cone Bearing, 62TE Driven Transfer Gear To Underdrive Shaft Retainer (31 Rollers)(2.498"ID) (Cast # NP442849) 2007-Up (Also Fits 62TE # 296)	1-2	
262281AK	Cone Bearing W/Cup Race, 62TE Driven Transfer Gear To Underdrive Shaft Retainer 2007-Up	1	
262282A	Cup Race, 62TE Pinion Bearing To Cover (.652"Thick)(3.063"OD)(2.510"ID)(Cast # LM603012) 2007-Up	1	
262283A	Cone Bearing, 62TE Pinion To Cover (20 Rollers)(1.782"ID)(Cast # LM603049) 2007-Up	1	
262286A	Spacer, 62TE Overrun Sprag To Snap Ring (.030"Thick)(3.010"OD)(2.245"ID) 2007-Up	2	
262288A	Cup Race, 62TE Differential To Case (Rear)(.687"Thick)(3.305"OD)(2.745"ID)(Cast # JLM704610) 2007-Up	1	
262289A	Cone Bearing, 62TE Differential To Case (Rear)(21 Roller)(1.965"ID)(Cast # JLM704649) 2007-Up	1	
262291A	Cup Race, 62TE Differential To Seal Retainer (Front)(.685"Thick)(3.543"OD)(Cast # Y32011XM) 2007-Up	1	
262292A	Cone Bearing, 62TE Differential To Seal Retainer (23 Roller)(2.165"ID)(Cast # NP394496) 2007-Up	1	
262293A	Shim, 62TE Differential Cup Race # 291 To Differential Seal Retainer (Selective)(3.515"OD) (3.080"ID) 2007-Up	1	
262296A	Use 262281A	1	
262297A	Use 262280A	1	

PART #	GASKETS & RUBBER COMPONENTS	QTY	REFERENCE #
262300AF	Gasket, 62TE Pan (Duraprene) 2007-Up	1	
262301AF	Gasket, 62TE Valve Body Cover (Duraprene) 2007-Up	1	
262304AF	Gasket, 62TE End Cover (Duraprene) 2007-Up	1	
92309	Gasket/Washer, 62TE Pump Bolt 2007-Up	1	
262310A	Gasket, 62TE Pump Body To Case 2007-Up	1	
32311	O-Ring, 62TE Pump 2007-Up	1	
262320A	Gasket/Plate, 62TE Valve Body To Case (Bonded) 2007-Up	1	
262321A	Gasket, 62TE Valve Body Plate To Clamping Plate 2007-Up	1	
92329	Gasket, 62TE Low/Reverse Piston Retainer To Case	1	
92330B	O-Ring, 62TE Overdrive & Reverse Clutch (Inner) 2007-Up	1	
92331B	Lip Seal, 62TE Overdrive/Reverse Clutch (Outer) & Input Clutch Retainer (Outer) 2007-Up	1	
92334AA	O-Ring, 62TE Input Clutch (Rear)(.103"Thick)(Red)(Inner) 2007-Up	1	
92334BA	O-Ring, 62TE Input Clutch (Front)(.103"Thick)(Blue)(Inner) 2007-Up	1	
92340	Lip Seal, 62TE Underdrive Clutch (Inner) 2007-Up	1	
92341A	Lip Seal, 62TE Underdrive Clutch (Outer) 2007-Up	1	
262378-1A	O-Ring, 62TE Inside Cooler Fitting (.345"ID)(Takes 2) 2007-Up	2	

© Whatever It Takes Transmission Parts. Inc.

PART #	ELECTRICAL COMPONENTS	QTY	REFERENCE #
262401A	Technical Manual On CD, 62TE 2007-Up (ATSG)	1	
262410-5A	Roll Pin, 62TE Holds PRNDL Switch To Manual Shaft (.160"OD)(.780"Long) 2007-Up	1	
262410A	PRNDL Switch, 62TE (4 Pin Connector)(Cast # 05078967AC) 2007-Up	1	
262415A	Sensor, 62TE Transmission Pressure Transducer (3 Bolt Bracket)(3 Pin Black Oval Connector) 2007-Up	1	
262420A	Solenoid Assembly, 62TE (Bolts To Valve Body)(23 Blade Connector)(W/ TFT Sensor) 2007-Up	1	
262420AD	Solenoid Assembly, 62TE (Bolts To Valve Body)(23 Blade Connector)(W/ TFT Sensor)	1	
262435A	Solenoid, 62TE VFS (1 Bolt)(2 Blade White Connector) 2007-Up (Also Called A Lock-Up Solenoid)	1	
262436A	Use 262438A	1	
262438A	Sensor, 62TE Input Speed (2 Blade Rectangle Connector)(Cast # 554AA)(On Top Of Case) 2007-Up (Also Fits 62TE Output Speed # 436 2007-Up)	1-2	
262439A	Sensor, 62TE Transfer Shaft Speed (2 Blade Elbow Rectangle Connector)(Cast # 930AA) (Reads Off Of The Rear Planet) 2007-Up	1	

PART #	MISCELLANEOUS COMPONENTS	QTY	REFERENCE #
T-9336	Dip Stick, 62TE (Tool To Ensure Proper Fluid Levels)	1	
262483A	Plug, 62TE (To Access The Park Pawl Pin)(3/8" Allen) 2007-Up	1	
92484	Screened Orifice, 62TE In Overdrive Reverse Clutch Piston 2007-Up	1	
262490A	Vent, 62TE Case (9/16" Hex)(1.125"Long) 2007-Up	1	
262493A	Cap, 62TE Filler Tube (Says For Dealer Use Only) 2007-Up	1	

PART #	HARDPARTS	QTY	REFERENCE #
262500A	Pump, 62TE (6 Bolt Body To Case)(Stator Cast # 04659715) 2007-Up	1	
262510A	Pump Body W/Gears, 62TE (6 Bolts To Case)(12 Teeth Inner Gear.575"Thick) 2007-Up	1	
262520A	Stator, 62TE (4 Ring)(Cast # 04659715)(Shaft Length Is 2 11/16" Long) 2007-Up	1	
262530A	Pump Gear Set, 62TE (12 Tooth Inner Gear .575" Thick) 2007-Up	1	
92540	By-Pass Valve, 62TE (In Case Under Pump) 2007-Up	1	
92554B	Drum, 62TE Input Clutch Retainer (Cast # 4446635) 2007-Up	1	
262555A	Drum, 62TE Direct Clutch (Aluminum)(6 Clutch)(2.230"Thick)(5.100"OD) 2007-Up	1	
262559A	Drum, 62TE Low Clutch Retainer (Aluminum)(3 Clutch)(8 Threaded Holes) 2007-Up (These Drums Have The Aluminum Ring Lands Cut Off & WE Replace With A Steel Sleeve With Ring Lands, With A Tighter Side Ring Clearance)	1	
92560A	Piston Kit, 62TE Overdrive/Reverse Clutch (Contains: Snap Ring & Spring) 2007-Up	1	
92564	Piston Kit, 62TE Underdrive Clutch 2007-Up	1	
262565A	Piston Kit, 62TE Direct Clutch (Contains: # 965A, # 975A,# 985A, & # 879A) 2007-Up	1	
262568A	Piston Kit, 62TE 2-4 Clutch (Contains: # 630, 968, 978) (#630 Has A Locking Tab At 6:00 And A Feed Hole At 9:00)	1	
262569A	Piston Kit, 62TE Low Clutch (Bonded Piston Is .512"Thick)(Contains: # 969A, # 979A, # 871A) 2007-Up	1	
92570A	Hub, 62TE Overdrive & Reverse Clutch (1.160"OD Of Shaft) 2007-Up	1	
262571A	Hub, 62TE Underdrive Clutch W/Solid Shaft (W/12 Rectangle Holes) 2007-Up	1	
92574A	Hub, 62TE Input Clutch (For 4 Ring Stator) 2007-Up	1	
262575A	Hub, 62TE Direct Clutch (1.115"Thick)(3.530"OD)(29 Clutch Splines) 2007-Up	1	
92578A	Hub & Sun Gear, 62TE 2-4 Clutch (1.160"ID Bushing) 2007-Up	1	
92582A	Planet, 62TE Front (With Heat Treated Splines) 2007-Up	1	
262582A	Planet, 62TE Front (4 Gear) 2007-Up	1	
262583A	Planet Kit, 62TE (3 Gear Front Planet)(Contains: #570, 578, 582, 594, 614, 584) 2007-Up	1	
262583AA	Planet Kit, 62TE (4 Gear Front Planet)(Contains: #570, 578, 582, 614, 584) 2007-Up	1	
262584A	Planet, 62TE Rear (5 Gear)(No Park Lugs)(With 48 Teeth Reluctor Instead) 2007-Up	1	
262586A	Planet, 62TE Underdrive (5 Gear)(Steel)(16 Outer Lugs) 2007-Up	1	
92594	Ring Gear, 62TE Rear Planet 2007-Up	1	
262596A	Ring Gear, 62TE Underdrive Planet (62 Teeth)(4.467"OD) 2007-Up	1	
92614	Sun Gear, 62TE Rear Planet (38 Teeth) 2007-Up	1	
262616A	Sun Gear, 62TE Underdrive Planet (28 Teeth)(1.830"OD) 2007-Up	1	
262630A	Retainer, 62TE 2-4 Clutch Piston (.945"Thick)(Steel) 2007-Up (With Locking Tab At 6:00, The Feed Hole Is At 9:00)	1	
92630	Retainer, 62TE 2-4 Clutch Piston (.956" Thick)(Steel) 2007-Up (With Locking Tab At 6:00, The Feed Hole Is At 6:00)	1	
92630A	Retainer, 62TE 2-4 Clutch Piston (.912" Thick)(Steel) 2007-Up (With Locking Tab At 6:00, The Feed Hole Is At 6:00)	1	

© Whatever It Takes Transmission Parts. Inc.

PART #	SPRAGS	QTY	REFERENCE #
262658A	Sprag, 62TE Overrun (26 Elements)(Plastic Cage)(With EndCaps)(.650"Thick With End Caps) 2007-Up	1	
262668A	Inner Race, 62TE Overrun Sprag (.650"Thick)(2.367"OD) 2007-Up	1	

PART #	HARDPARTS (Continued)	QTY	REFERENCE #
262669A	Outer Race, 62TE Overrun Sprag (.970"Thick)(3.025"ID)(31 Clutch Splines) 2007-Up	1	
262670A	Shaft, 62TE Input (22 Splines)(8 3/4"Long) 2007-Up	1	
262676A	Shaft, 62TE Underdrive (8 5/8" Long)(.500"OD Front Pilot) 2007-Up	1	
262678A	Output Shaft, 62TE (3 1/2"Long)(24 Park Lugs)(28 Teeth Reluctor) 2007-Up	1	
262698A	Oil Dam, 62TE Under Passengers Side Axle Seal (Tin)(2.918"OD)(1.717"ID) 2007-Up (Also Fits 62TE Under Drivers Side Seal)	1-2	
262699A	Oil Deflector, 62TE Under Transfer Gear Cover (Plastic)(Cast # 04872683AA) 2007-Up	1	
262710A	Gear, 62TE Drive Transfer (Output)(74 Teeth) 2007-Up	1	
262712A	Gear, 62TE Driven Transfer (70 Teeth) 2007-Up	1	
262713A	Retainer, 62TE Underdrive Shaft (1.125"Thick)(4.883"OD)(3.380"ID)(8 Bolt) 2007-Up	1	
262715A	Differential Assembly, 62TE (2WD)(79 Teeth)(12 Bolt)(23 Roller Bearing On Housing Side, 21 Roller Bearing On Ring Gear Side)(Has Only One Set Of Inner Splines On The Bell Housing Side) 2007-Up	1	
262715AA	Differential Assembly, 62TE (4x4)(79 Teeth)(12 Bolt)(23 Roller Bearing On Housing Side, 21 Roller Bearing On Ring Gear Side)(Has Two Sets Of Inner Splines On The Bell Housing Side) 2007-Up	1	
262716A	Differential Housing, 62TE (2WD)(12 Bolt)(6 3/4" Tall)(1.375"ID Axle Hole)(23 Roller Bearing On Housing Side, 21 Roller Bearing On Ring Gear Side)(Has Only One Set Of Splines On The Bell Housing Side) 2007-Up	1	
262716AA	Differential Housing, 62TE (4x4)(12 Bolt)(6 3/4" Tall)(1.375"ID Axle Hole)(23 Roller Bearing On Housing Side, 21 Roller Bearing On Ring Gear Side)(Has Two Sets Of Splines On The Bell Housing Side) 2007-Up		
262717-11A	Retainer, 62TE Differential Cross Pin (2 Bolt)(.040"Thick)(.995"Tall)(2.215"Long) 2007-Up	2	
262720A	Differential Ring Gear, 62TE (79 Teeth)(12 Bolt)(8 13/16"OD) 2007-Up	1	
262725A	Retainer, 62TE Differential Seal (2WD)(Aluminum)(.950"Thick)(2.280"ID)(Cast # 507858BAA) 2007-Up	1	
262725AA	Retainer, 62TE Differential Seal (4x4)(Cast Iron)(With 2 Threaded Bosses) 2007-Up	1	
92727A	Retainer, 62TE Drive Transfer Gear Nut 2007-Up (Keeps Nuts From Backing Off)(This Goes With 92727B)	1	
92727B	Plate, 62TE Drive Transfer Gear Nut Retainer 2007-Up (This Plate Goes With 92727A)	1	
92727B-1	Bolt, 62TE Holds On The Drive Transfer Gear Retainer Plate (.595"Long)(15mm Head)(Takes 2 Per Transmission) 2007-Up	2	
262730A	Pinion, 62TE (23 Teeth, 1 Groove)(3.685"Long)(2.740"OD) 2007-Up	1	
262735A	Retainer, 62TE Pinion Cover (.995"Thick)(4.690"OD)(1.815"ID)(10 Bolt) 2007-Up	1	
262736A	Plug, 62TE Screws Into Front Of Case Into The Pinion Area (8mm Allen)(.460"Long)(.665"OD) 2007-Up	1	
262740A	Valve Body, 62TE (Cast # On Case Side 5078705AA) 2007-Up	1	

PART #	VALVE BODY COMPONENTS	QTY	REFERENCE #
S92741C-6	Plugs, 62TE Switch Valve (2 Plugs)(Non VLP Units)	1	
T-92835-BST2	Bore Sizing Tool, 62TE (When Used After Reaming, This Provides Exact Bore Sizing And Superior Bore Surface Finish)(Prepares Bore For Installation Of Sonnax Oversized Solenoid Switch Valve Plug Kit S92741CA-6)(Sonnax)	1	
S92741CASK	Valve Kit, 62TE Solenoid Switch (.420"OD)(Oversize)(Sonnax)(Contains: Oversize Valve, Valve Plugs, & End Plug)(Must Use T-F-92835-TL32)	1	
T-F-92835-TL32	Reamer For S92741CASK	1	
S92741CBSK	Valve Kit, 62TE Oversized TCC Control & Plunger Valve Kit (Must Use T-F-92835-TL33 & T-VB-FIX)	1	
T-F-92835-TL33	Reamer For S92741CBSK	1	
T-VB-Fix	Valve Body Reaming Fixture (Sonnax)	1	
S92741CK	Valve Kit, 62TE TCC Regulator (Oversized)(Contains Valve & Spring)(Sonnax)(Must Use T-F-92835-TL37)	1	
T-F-92835-TL37	Tool Kit For S92741CK (Contains Reameer, Jig & Guide Pin)(Sonnax)	1	
A92741LA	Valve Repair, 62TE Solenoid Switch (Without Tool)(Transgo) (Fits VB's With .453 Large Land Diameter)	1	
A92741LAK	Valve Repair, 62TESolenoid Switch (With Tool)(Transgo)(Fits VB's With .453 Large Land Diameter)	1	

PART #	HARDPARTS (Continued)	QTY	REFERENCE #
262747A	Seperator Plate, 62TE Valve Body To Clamping Plate (Steel) 2007-Up	1	

© Whatever It Takes Transmission Parts. Inc.

262748A.....Clamping Plate, 62TE Valve Body (Aluminum) 2007-Up .....1 .....
262758A.....Clamp Shell, 62TE Differential Cover (Aluminum, 10 Bolt)(Cast # 05078928AA) 2007-Up .....1 .....
262759-1A.....Bracket, 62TE Rear Cover Reinforcement (2 Bolt) 2007-Up .....1 .....
262759A.....Rear Cover, 62TE (Transfer Gear)(13 Bolt, Metal) 2007-Up.....1 .....
262760A.....Case, 62TE (2WD & 4x4)(Starter At 3:00)(Cast # 552AA)(Top Bolts Are 2 1/4") 2007-Up.....1 .....
262760AA.....Case, 62TE (2WD & 4x4)(Starter At 3:00)(Cast # 505AA)(Top Bolts Are 3 3/8") 2007-Up.....1 .....
262765A.....Bottom Pan, 62TE (12 Bolt, Metal)(2.905" At Deep End) 2007-Up.....1 .....
262766A.....Side Pan, 62TE (Valve Body Cover)(13 Bolt, Steel) 2007-Up .....1 .....
262777AK.....Bolt Set, 62TE Pump To Case (6 Pieces) 2007-Up .....1 .....
92778K.....Bolt Set, 62TE Pump Body To Stator (6 Pieces) 2007-Up .....1 .....
262779AK.....Bolt Set, 62TE Bottom Pan (12 Pieces) 2007-Up .....1 .....
262780AK.....Bolt Set, 62TE Rear Cover (13 Pieces) 2007-Up (Also Fits 62TE Side Pan # 788 2007-Up) ..... 1-2.....
262782AK.....Bolt Set, 62TE Valve Body To Case (21 Pieces) 2007-Up.....1 .....
262786AK.....Bolt Set, 62TE Differential Ring Gear (12 Pieces) 2007-Up.....1 .....
262787AK.....Bolt Set, 62TE Underdrive Shaft Retainer (8 Pieces) 2007-Up .....1 .....
262788AK.....Use U262780AK .....1 .....
262790AK.....Bolt Set, 62TE Pinion Retainer To Case (10 Pieces) 2007-Up .....1 .....
262791AK.....Bolt Set, 62TE Holds Solenoid Assembly To Valve Body (14 Pieces) 2007-Up.....1 .....
262792AK.....Bolt Set, 62TE Filter (2 Pieces) 2007-Up .....1 .....
262793AK.....Bolt Set, 62TE Differential Seal Retainer (5 Pieces) 2007-Up .....1 .....
262794AK.....Bolt Set, 62TE Differential Cover To Case (10 Pieces) 2007-Up .....1 .....
262795A.....Bolt, 62TE Holds Drive Transfer Gear To Rear Planet (1.780"Long)(37mm Head) 2007-Up .....1 .....
262796A.....Nut, 62TE Holds Driven Transfer Gear To Underdrive Shaft (.615"Thick)(50mm) 2007-Up.....1 .....
92860B.....Snap Ring, 62TE Holds Underdrive Pressure Plate In (.090"Thick)(6 5/16"OD) 2007-Up .....1 .....
92861.....Snap Ring, 62TE Holds Overdrive Pressure Plate In (Bottom)(.061"Thick)(6 7/8"OD)(Wavy)
.....2007-Up .....1 .....
92862.....Snap Ring, 62TE Holds Spring To Piston (.060"Thick)(5.325"OD) 2007-Up .....1 .....
92863.....Snap Ring, 62TE Holds Low/Reverse Pressure Plate In Case (.068"Thick)(7"OD) 2007-Up .....1 .....
92863A.....Snap Ring, 62TE Holds Low/Reverse Pressure Plate In Case (.076"Thick)((7"OD) 2007-Up .....1 .....
92863B.....Snap Ring, 62TE Holds Low/Reverse Pressure Plate In Case (.088"Thick)(7"OD) 2007-Up.....1 .....
262866A.....Snap Ring, 62TE Holds Sun Gear To Underdrive Shaft (.047"Thick)(1.035"OD)(W/3 Legs)
.....2007-Up .....1 .....
262867A.....Snap Ring, 62TE Holds Planet To Output Shaft (.062"Thick)(5.037"OD) 2007-Up .....2 .....
262870A.....Snap Ring, 62TE Holds Low Clutch Pressure Plate In (.134"Thick)(5.185"OD) 2007-Up .....1 .....
262871A.....Snap Ring, 62TE Holds Low Clutch Return Spring In Retainer (.061"Thick)(2.165"OD) 2007-Up .1 .....
92875.....Snap Ring, 62TE Holds Input Clutch Retainer In (.095"Thick)(2.595"OD)(W/2 Eyelets) 2007-Up .1 .....
92877.....Snap Ring, 62TE Holds Underdrive Retainer In (.077"Thick)(2.286"OD)(W/2 Eyelets) 2007-Up...1 .....
262878A.....Snap Ring, 62TE Holds Direct Clutch Reaction Plate In Drum (.070"Thick)(5.125"OD)
.....Beveled) 2007-Up .....1 .....
262879A.....Snap Ring, 62TE Holds Direct Clutch Spring Retainer In Drum (.062"Thick)(2.00"OD)
.....(With 2 Eyelets) 2007-Up .....1 .....
92880.....Snap Ring, 62TE Holds Input Shaft To Hub (.061"Thick)(1.030"OD)(Wire Type) 2007-Up .....1 .....
262881A.....Snap Ring, 62TE Holds Overrun Sprag In Outer Race (.028"Thick)(3.115"OD) 2007-Up.....2 .....
92882.....Snap Ring, 62TE Holds Front Planet To Rear Ring Gear (.061"Thick)(4.720"OD) 2007-Up .....1 .....
262883A.....Snap Ring, 62TE Holds 2-4 Clutch Retainer In (.067"Thick)(7"OD) 2007-Up.....1 .....
262885A.....Snap Ring, 62TE Under Low/Reverse Clutch Pressure Plate (.060"Thick)(8 3/4"OD)(Waved)
.....2007-Up .....1 .....
262887A.....Snap Ring, 62TE Holds Low Clutch Retainer In Case (.123"Thick)(5.920"OD)(Beveled)
.....2007-Up .....1 .....
92891.....Snap Ring, 62TE Holds Overdrive Clutch Pressure Plate In (Top)(.069"Thick) 2007-Up.....1 .....
92892.....Snap Ring, 62TE Holds Reverse Pressure Plate In (.061"Thick) 2007-Up.....1 .....
92892A.....Snap Ring. 62TE Holds Reverse Pressure Plate In (.071"Thick) 2007-Up.....1 .....
92892B.....Snap Ring, 62TE Holds Reverse Pressure Plate In (.081"Thick) 2007-Up.....1 .....
92892C.....Snap Ring, 62TE Holds Reverse Pressure Plate In (.090"Thick) 2007-Up.....1 .....
92893.....Snap Ring, 62TE Holds Low/Reverse Piston In (.062"Thick)(3.485"OD) 2007-Up.....1 .....
92936A.....Spring, 62TE Accumulator (Outer) 2007-Up .....6 .....
262936-1A.....Spring, 62TE Accumulator (Inner) (With Tapered Ends) 2007-Up .....6 .....
92937.....Piston, 62TE All Six Accum 2007-Up .....6 .....
92957.....Retainer, 62TE Low/Reverse Clutch Piston (Tin) 2007-Up (2nd Design, The The 3 Holes In A
.....Row Are All The Same Size)(Replaces 1st Design).....1 .....
92957A.....Retainer, 62TE Low/Reverse Clutch Piston (Tin) 2007-Up (3rd Design, The 3 Holes In A Row
.....Has A Larger Middle Hole)(Retro Fits All Previous Designs) .....1 .....
92960.....Piston, 62TE Underdrive Clutch (With Molded Rubber) 2007-Up.....1 .....
92961A.....Piston, 62TE Overdrive/Reverse Clutch (4 Lug Overdrive Pressure Plate) 2007-Up.....1 .....
262965A.....Piston, 62TE Direct Clutch (Bonded)(.505"Thick)(4.505"OD)(1.900"ID) 2007-Up.....1 .....
262967A.....Piston, 62TE Low/Reverse Clutch (Bonded)(1.054"Thick)(Cast # 5078591AA) 2007-Up.....1 .....
92968D.....Piston, 62TE 2-4 Clutch (Bonded)(.665"Thick) 2007-Up .....1 .....
262969A.....Piston, 62TE Low Clutch (Bonded)(.512"Thick)(4.815"OD)(2.060"ID) 2007-Up.....1 .....
92970.....Spring, 62TE Underdrive Clutch Return (3.002"OD)(2.250"Tall) 2007-Up.....1 .....
92971.....Spring, 62TE Overdrive & Reverse Clutch Return (.063"Thick)(4.992"OD)(8 Fingers) 2007-Up ..1 .....
2

© Whatever It Takes Transmission Parts. Inc.

PART #	HARDPARTS (Continued)	QTY	REFERENCE #
62975A	Spring, 62TE Direct Clutch Return (1.955”Tall) 2007-Up	1	
82977B	Spring, 62TE Low/Reverse Clutch Return (.075”Thick)(5.715”OD)(10 Fingers) 2007-Up	1	
92978	Spring, 62TE 2-4 Clutch Return (.063”Thick)(6 1/2”OD)(8 Fingers) 2007-Up	1	
262979A	Spring, 62TE Low Clutch Return (.055”Thick)(4.115”OD)(10 Fingers) 2007-Up	1	
92980	Housing, 62TE Underdrive Piston (.555”Thick) 2007-Up	1	
262985A	Retainer/Piston, 62TE Direct Clutch Spring (Bonded)(.805”Thick)(4.320”OD)(1.875”ID) 2007-Up	1	
262991-2A	Spring, 62TE Rooster Comb Detent (3.850”Long)(1 Bolt) 2007-Up	1	
262991-4A	Manual Lever & Rod, 62TE (12 3/8”Long)(W/White Plastic Sleeve For Seal) 2007-Up	1	
262991-5A	Retaining Pin, 62TE Holds Manual Shaft To Case (2mm Allen Countersunk Into The Side Pan Gasket Surface) 2007-Up (Also Fits 62TE Holds Park Pawl Shaft # 995-5 2007-Up)	1-2	
262994A	Park Rod Actuator, 62TE (3 1/2” Long)(.775”OD Ball On End) 2007-Up	1	
262994-3A	Park Rod Actuator Guide, 62TE (2.715”Long)(1.280”OD) 2007-Up	1	
262995A	Park Pawl Assembly, 62TE (Contains: # 995-4, 995-1, 995-3, 991-5, 483, 994-3, 994-5) 2007-Up	1	
262995-1A	Park Pawl, 62TE (.320”Thick) (Cast # W2 018) 2007-Up	1	
262995-3A	Spring, 62TE Park Pawl (W/2 Ears)(.036”OD Wire) 2007-Up	1	
262995-4A	Pin, 62TE Park Pawl Pivot (.393”OD)(1.965”Long) 2007-Up	1	
262995-5A	Use 262991-5A	1	
262996A	Fitting, 62TE Cooler Line (19mm Hex)(Push-In Line Type)(Takes 2) 2007-Up	2	
262999A	Tube Set, 62TE (3 Pieces)(8 3/8” Long) 2007-Up	1	
262999-7A	Oil Tube, 62TE 2-4 Clutch (Plastic Rubber Tipped)(1.625”Long)(.712”OD)(Under Valve Body, In Case) 2007-Up	1	

© Whatever It Takes Transmission Parts. Inc.

REBUILD ESSENTIALS
for 62TE



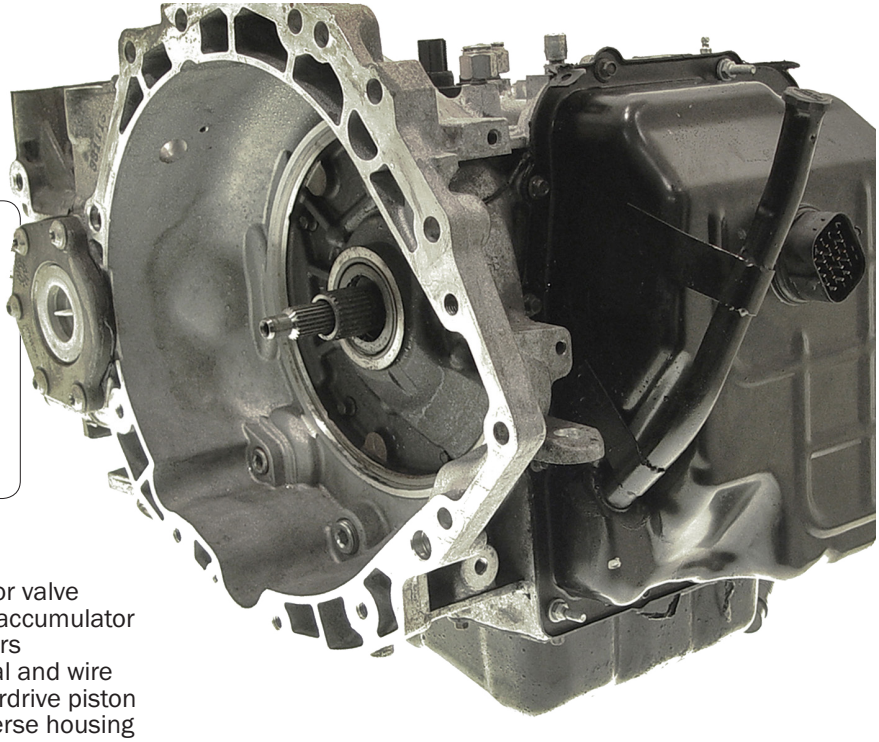

Valve Body Repair Kit
#T262165A

Corrects, Prevents, Reduces
- TCC slip/shudder
- Overheating
- Delay or no forward or reverse
- Rough coast down 4-3
- Stabilizes clutch pressures

Also Includes
- Drop-in PR valve
- Drop-in TC regulator valve
- High temperature accumulator rings and expanders
- Self-expanding seal and wire expander for underdrive piston
- No shrink low/reverse housing gasket

REBUILD ESSENTIALS
for 604, 42RLE w/VLP

When working on VLP units, before road testing, be sure to reset line pressure counter, clear codes and do a quick learn.

Additionally: 42RLE with VLP built before April 28 2008 should have the PCM flashed with the latest software. Low speed partial apply TCC operation is greatly improved with software update.

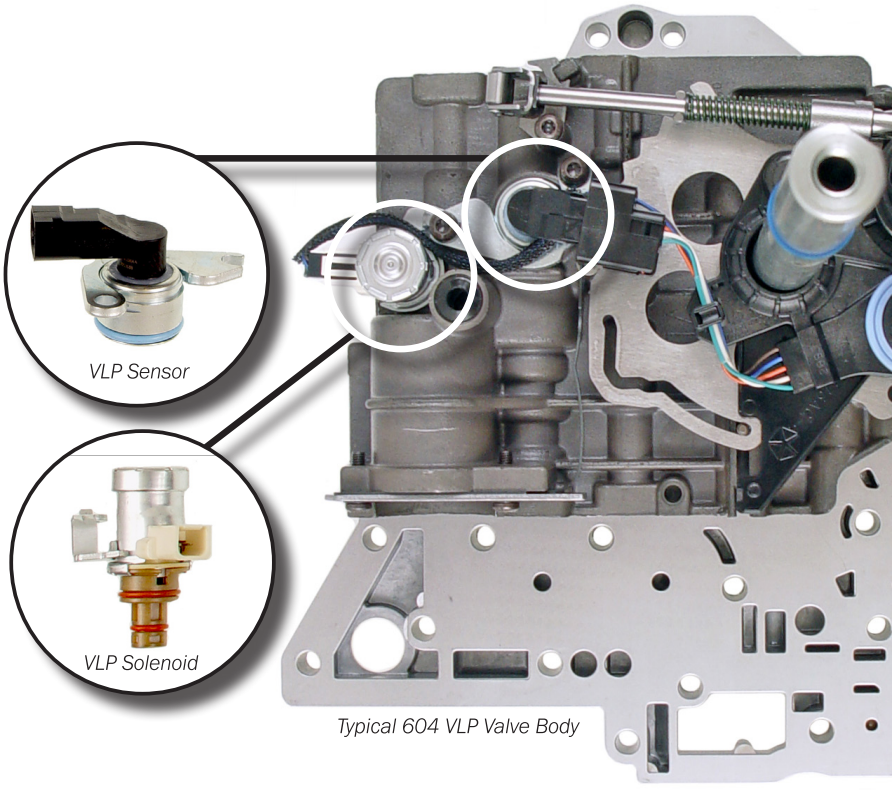

Typical 604 VLP Valve Body

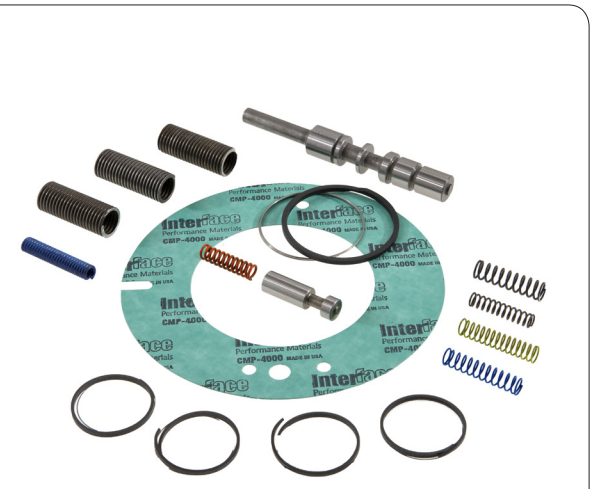

Valve Body Repair Kit
#T92165A
604-VLP, 40-TES, 41-TES (FWD)
2006-2017 42RLE-VLP (RWD)

Corrects, Prevents, Reduces
- TCC slip/shudder
- Overheating
- Delay or no forward or reverse
- 4-3 & 2-1 coast clunk

Also Includes
- Drop-in PR valve
- Drop-in TC regulator valve
- High temperature accumulator rings and expanders
- Self-expanding seal and wire expander for underdrive piston
- No shrink low/reverse housing gasket

Technical data ©TransGo. All rights reserved. TransGo®, Shift Kit®, SK® and Reprogramming Kit™ are registered and licensed trademarks.

002 Overhaul Kit

004 Master L/Steels Kit

006 Master W/Steels Kit

030 Bushing Kit

139 Steel Module

400 Technical Manuals

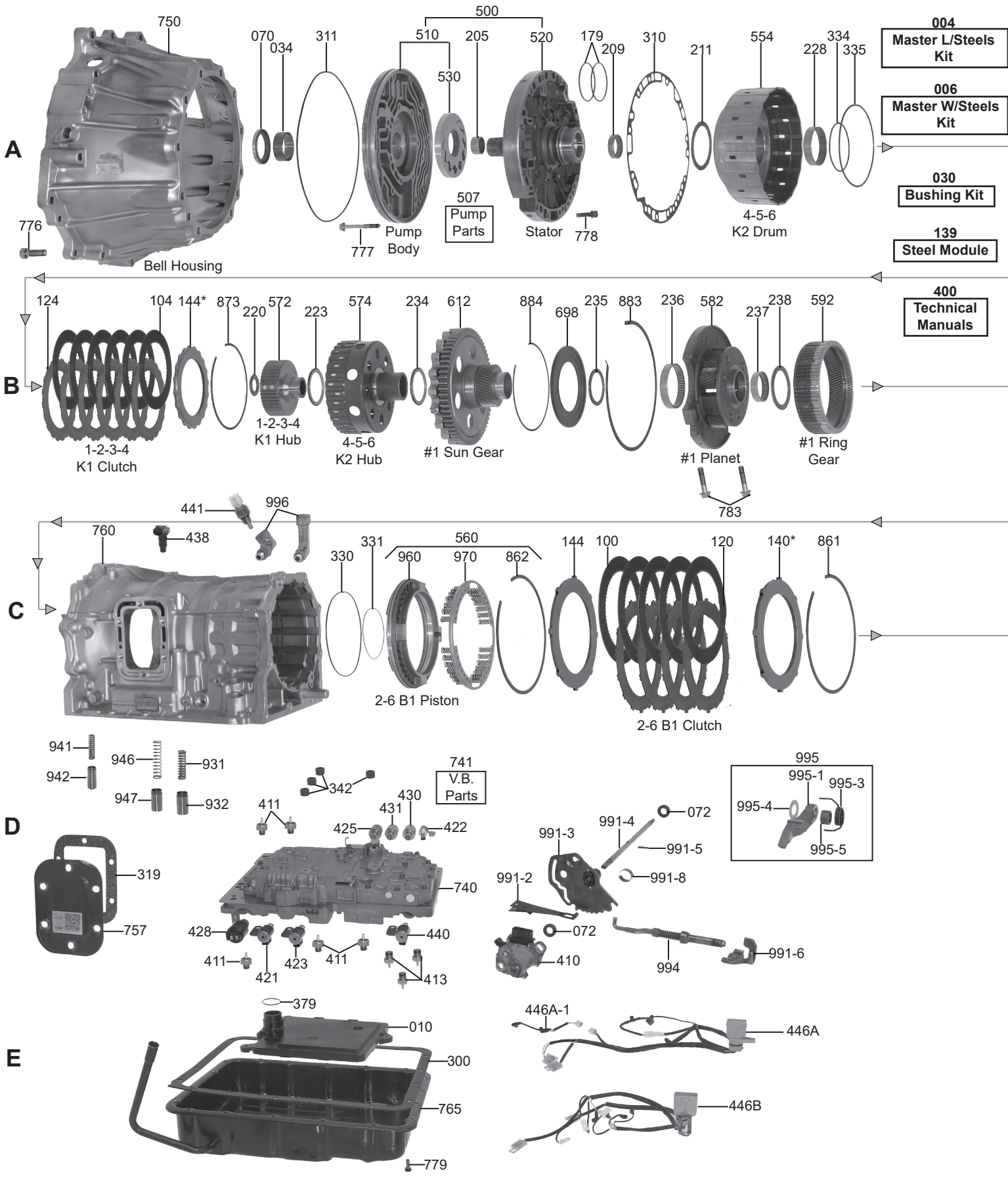

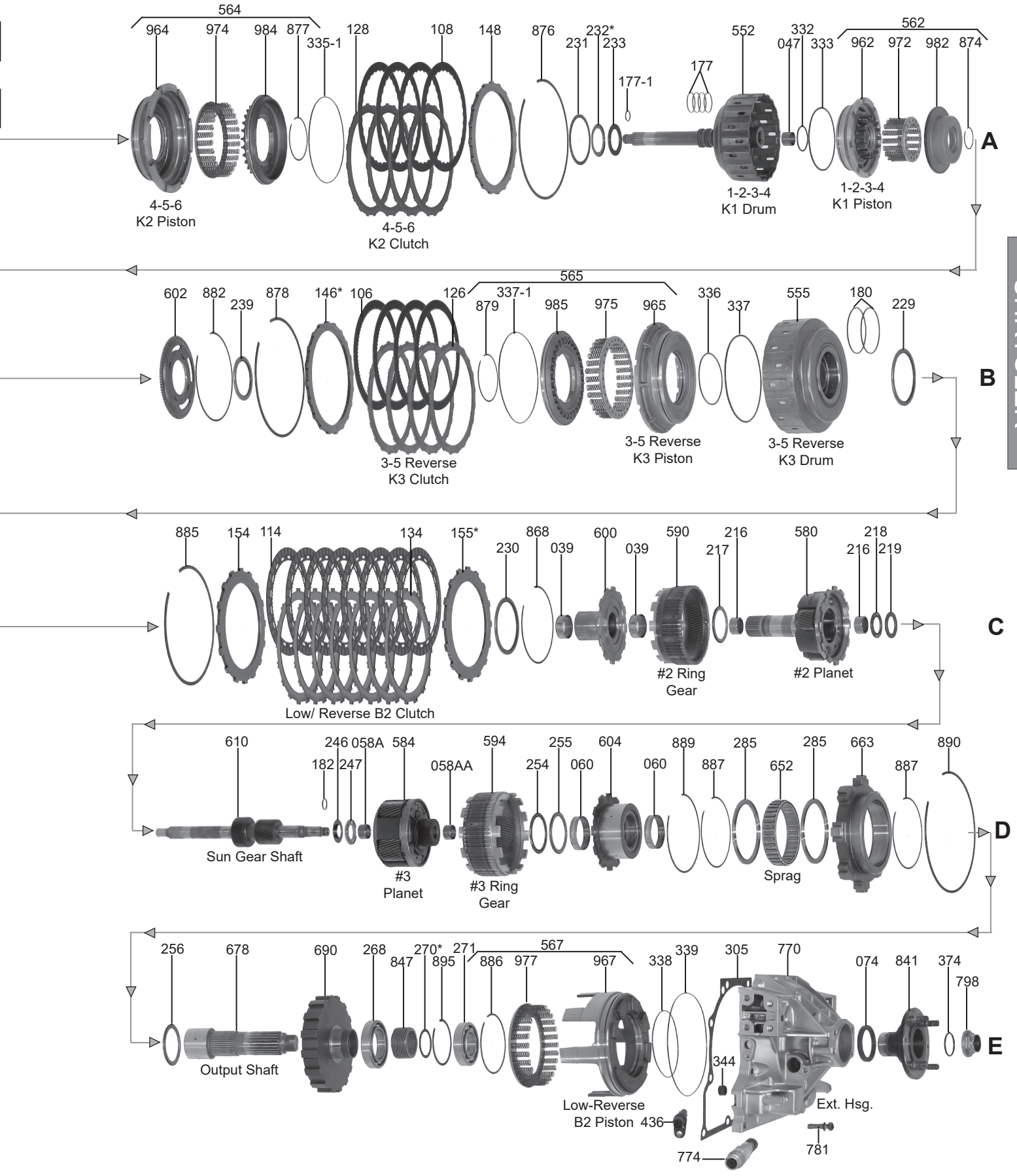

CHRYSLER

© Whatever It Takes Transmission Parts. Inc.

PART #	OVERHAUL KITS	QTY	REFERENCE #
172002AF	Overhaul Kit, AS68RC (All)(Duraprene) 2006-Up	1	
172002CF	Overhaul Kit, AS68RC 2013-Up (W/Duraprene Pan Gasket)(Fits Dodge 3500, 4500, & 5500 With 6.7L)	1	

PART #	MASTER L/STEELS KIT	QTY	REFERENCE #
172004AF	Master L/Steels Kit, AS68RC (Chrysler)(With 60 Teeth 4-5-6 (K2) Clutch Frictions) 2006-Up	1	
172004BF	Master L/Steels Kit, AS68RC (Isuzu/Mitsubishi)(With 32 Teeth 4-5-6 (K2) Clutch Frictions) 2006-Up	1	

PART #	MASTER W/STEELS KIT	QTY	REFERENCE #
172006AF	Master W/Steels Kit, AS68RC (Chrysler)(With 60 Teeth 4-5-6 (K2) Clutch Frictions) 2006-Up	1	
172006BF	Master W/Steels Kit, AS68RC (Isuzu/Mitsubishi)(With 32 Teeth 4-5-6 (K2) Clutch Frictions) 2006-Up	1	
172006CHF	Master W/Steels Kit, AS69RC 2013-Up (W/GPZ Frictions)	1	

PART #	FILTERS	QTY	REFERENCE #
172010A	Filter, AS68RC (Chrysler)(.655”Tall Pick-Up) 2007-Up	1	68019688AA
172010B	Filter, AS68RC (Isuzu) (.155”Tall Pick-Up) 2005-Up	1	
172010C	Filter, AS69RC (Dodge) 2013-Up	1	

PART #	BUSHINGS	QTY	REFERENCE #
172030A	Bushing Kit, AS68RC (A465) (7 Bushings) 2006-Up	1	
172034A	Bushing, AS68RC Pump Body (Front)	1	
172039-1A	Bushing, AS68RC (All) # 2 Planet Ring Gear Hub (Rear)(.665”Wide)(1.800”OD)(1.687”ID) 2005-Up	1	
172039A	Bushing, AS68RC (All) # 2 Planet Ring Gear Hub (Front)(.625”Wide)(1.770”OD)(1.650”ID) 2005-Up	1	
172047A	Bushing, AS68RC (All) 1-2-3-4 (K1) Clutch Drum (Rear)(.740”Wide)(.900”OD)(.785”ID) 2005-Up	1	
172058A	Bushing, AS68RC (All) # 3 Planet (Front)(.570” Wide)(1.065”OD)(.935”ID) 2005-Up	1	
172058AA	Bushing, AS68RC (All) #3 Planet (Rear)(.570” Wide)(1.073”OD)(.923”ID) 2005-Up	1	
172060A	Bushing, AS68RC (All) # 3 Planet Ring Gear Hub (Inner Sprag Race)(.540”Wide)(2.495”OD) (2.295”ID) 2005-Up	2	

PART #	METAL CLAD SEALS	QTY	REFERENCE #
172070A	Seal, AS68RC (All) Front (.345” Thick)(2.530”OD)(1.795”ID) 2005-Up	1	68019663AA
172072A	Seal, AS68RC (All) Manual Shaft (.285”Thick)(.880”OD)(.445”ID) 2005-Up	2	68020054AA
172074A	Seal, AS68RC (All) Extension Housing (2WD)(.305”Thick)(2.683”OD) 2005-Up	1	68020037AA
172074AA	Seal, AS68RC (Chrysler) Extension Housing (4X4)(.300”Thick)(2.602”OD) 2007-Up	1	68020128AA

PART #	FRICTIONS	QTY	REFERENCE #
172100A	Friction, AS68RC (All) 2-6 (B1) Clutch (.082”)(66 Teeth)(7 7/8”OD) 2005-Up	5	68019839AA
172100C	Friction, AS69RC 2-6 Clutch (B1)(66 Teeth)(.089”Thick)(8.005”OD) 2013-Up	5	
172104A	Friction, AS68RC (All) 1-2-3-4 (K1) Clutch (.081”)(48 Teeth)(5.820”OD)(High Energy) 2005-Up	6	68019774AA
172104C	Friction, AS69RC 1-2-3-4 Clutrch (K1)(54 Teeth)(.080”Thick)(5.975”OD) 2013-Up	6	
172106A	Friction, AS68RC (All) 3-5 Reverse (K3) Clutch (.084”)(78 Teeth)(8 1/16”OD) 2007-Up (Chrysler Takes 5)(Isuzu/Mitsubishi Takes 4)	4-5	68019745AA
172106C	Friction, AS69RC 3-5 Reverse Clutch (K3)(56 Teeth)(.080”Thick)(8.068”OD) 2013-Up	4-5	
172108A	Friction, AS68RC (Chrysler) 4-5-6 (K2) Clutch (.084”)(60 Teeth)(8 1/16”OD) 2007-Up	5	68019793AA
172108B	Friction, AS68RC (Isuzu/Mitsubishi) 4-5-6 (K2) Clutch (.084”)(32 Teeth)(8 1/16”OD) 2005-Up	4	
172108C	Friction, AS69RC 4-5-6 Clutch (K2)(78 Teeth)(.088”Thick)(8.068”OD) 2013-Up	4-5	
172114A	Friction, AS68RC (All) Low/Reverse (B2) Clutch (.070”)(70 Teeth)(7 15/16”OD) 2006-Up	8	68019853AA
172114C	Friction, AS69RC Low/Reverse Clutch (B2)(78 Tetth)(.080”Thick)(8.407”OD) 2013-Up	8	
172119A	Friction Module, AS68RC (Chrysler) 2007-Up	1	
172119B	Friction Module, AS68RC (Mitsubishi) 2007-Up	1	

PART #	STEELS	QTY	REFERENCE #
172120A	Steel, AS68RC (All) 2-6 (B1) Clutch (.112”)(16 Teeth)(5 15/16”ID) 2005-Up	4	68019838AA
172120C	Steel, AS69RC 2-6 Clutch (B1) (8.549”OD)(6.136”ID)(19/24 Teeth) (.111”Thick) 2013-Up	4	
172124A	Steel, AS68RC (All) 1-2-3-4 (K1) Clutch (.096”)(20 Teeth)(4.135”ID) 2005-Up	6	68019775AA
172124C	Steel, AS69RC 1-2-3-4 Clutch (K1) (6.227”OD)(4.728”ID)(20 Teeth)(.095”Thick) 2013-Up	6	

© Whatever It Takes Transmission Parts. Inc.

172126A	Steel, AS68RC (All) 3-5 Reverse (K3) Clutch (.097")(20 Teeth)(6 7/8"ID) 2005-Up (Chrysler Takes 5)(Isuzu Takes 4)(Also Fits AS68RC (All) 4-5-6 (K2) Clutch # 128 2005-Up)	8-10	68019747AA
172126C	Steel, AS69RC 3-5 Reverse Clutch (K3)(8.317"OD)(7.086"ID)(20 Teeth)(.096"Thick) (Also Fits 4-5-6 Clu(K2) # 128 2013-Up)	8-10	
172128A	Use 172126A	4-5	
172128C	Use 172126C	4-5	
172134A	Steel, AS68RC (All) Low/Reverse (B2) Clutch (.112")(16 Teeth)(6 3/4"ID) 2005-Up	7	68019848AA
172134C	Steel, AS69RC Low/Reverse (B2) Clutch (9.024"OD)(7.226"ID)(19/24 Teeth) (.110"Thick) 2013-Up	7	
172139A	Steel Module, AS68RC (All) 2005-Up	1	
172139C	Steel Mod, AS69RC 2013-Up	1	

PART #	PRESSURE PLATES	QTY	REFERENCE #
172140AA	Pressure Plate, AS68RC (All) 2-6 (B1) Clutch (.213")(8 Teeth)(5 15/16"ID) 2005-Up	1	68019840AA
172140AB	Pressure Plate, AS68RC (All) 2-6 (B1) Clutch (.218")(8 Teeth)(5 15/16"ID) 2005-Up	1	68019841AA
172140AC	Pressure Plate, AS68RC (All) 2-6 (B1) Clutch (.224")(8 Teeth)(5 15/16"ID) 2005-Up	1	68019842AA
172140AD	Pressure Plate, AS68RC (All) 2-6 (B1) Clutch (.230")(8 Teeth)(5 15/16"ID) 2005-Up	1	68019843AA
172140AE	Pressure Plate, AS68RC (All) 2-6 (B1) Clutch (.236")(8 Teeth)(5 15/16"ID) 2005-Up	1	68019844AA
172141A	Apply Plate, AS68RC (All) 2-6 (B1) Clutch (.305")(8 Teeth)(5 15/16"ID) 2005-Up	1	68019845AA
172144AA	Pressure Plate, AS68RC (All) 1-2-3-4 (K1) Clutch (.116")(20 Teeth)(4.130"ID) 2005-Up	1	68019776AA
172144AB	Pressure Plate, AS68RC (All) 1-2-3-4 (K1) Clutch (.122")(20 Teeth)(4.130"ID) 2005-Up	1	68019777AA
172144AC	Pressure Plate, AS68RC (All) 1-2-3-4 (K1) Clutch (.128")(20 Teeth)(4.130"ID) 2005-Up	1	68019778AA
172144AD	Pressure Plate, AS68RC (All) 1-2-3-4 (K1) Clutch (.134")(20 Teeth)(4.130"ID) 2005-Up	1	68019779AA
172144AE	Pressure Plate, AS68RC (All) 1-2-3-4 (K1) Clutch (.140")(20 Teeth)(4.130"ID) 2005-Up	1	68019780AA
172146AA	Pressure Plate, AS68RC (All) 3-5 Reverse (K3) Clutch (.248")(20 Teeth)(6 7/8"ID) 2005-Up (Also Fits AS68RC (All) 4-5-6 (K2) Clutch # 148 2005-Up)	1-2	68019756AA
172146AB	Pressure Plate, AS68RC (All) 3-5 Reverse (K3) Clutch (.254")(20 Teeth)(6 7/8"ID) 2005-Up (Also Fits AS68RC (All) 4-5-6 (K2) Clutch # 148 2005-Up)	1-2	68019757AA
172146AC	Pressure Plate, AS68RC (All) 3-5 Reverse (K3) Clutch (.260")(20 Teeth)(6 7/8"ID) 2005-Up (Also Fits AS68RC (All) 4-5-6 (K2) Clutch # 148 2005-Up)	1-2	68019758AA
172146AD	Pressure Plate, AS68RC (All) 3-5 Reverse (K3) Clutch (.266")(20 Teeth)(6 7/8"ID) 2005-Up (Also Fits AS68RC (All) 4-5-6 (K2) Clutch # 148 2005-Up)	1-2	68019759AA
172146AE	Pressure Plate, AS68RC (All) 3-5 Reverse (K3) Clutch (.272")(20 Teeth)(6 7/8"ID) 2005-Up (Also Fits AS68RC (All) 4-5-6 (K2) Clutch # 148 2005-Up)	1-2	68019760AA
172148A	Use 172146AA - AE	1	
172154A	Use 172155AD	1	
172155AA	Apply Plate, AS68RC (All) Low/Reverse (B2) Clutch (.212")(8 Teeth)(6 1/4"ID) 2005-Up	1	68019849AA
172155AB	Apply Plate, AS68RC (All) Low/Reverse (B2) Clutch (.220")(8 Teeth)(6 1/4"ID) 2005-Up	1	68019850AA
172155AC	Apply Plate, AS68RC (All) Low/Reverse (B2) Clutch (.228")(8 Teeth)(6 1/4"ID) 2005-Up	1	68019851AA
172155AD	Apply Plate, AS68RC (All) Low/Reverse (B2) Clutch (.236")(8 Teeth)(6 1/4"ID) 2005-Up (Also Fits AS68RC (All) Low/Reverse (B2) Clutch Pressure Plate # 154 2005-Up)	1-2	68019852AA

PART #	SEALING RINGS	QTY	REFERENCE #
172177-1AT	Sealing Ring, AS68RC (All) 1-2-3-4 (K1) Clutch Drum Shaft (Input Shaft, Pilot)(.075"Thick) (.782"OD) 2005-Up	1	68019782AA
172177AT	Sealing Ring, AS68RC (All) K1 Drum Shaft (Input)(.078"Thick)(1.425"OD)(Teflon) 2005-08	4	68019781AA
172179AT	Sealing Ring, AS68RC (All) Stator (Rear)(.085"ThICK)(2.840"OD)(Teflon) 2005-Up	2	68019667AA
172180AT	Sealing Ring, AS68RC (All) 3-5 Reverse Clutch (Sets In Case)(.086"Thick)(3.385"OD)(Teflon) 2005-Up	2	68019799AA
172182AT	Sealing Ring, AS68RC (All) Sun Gear Shaft (Rear)(.075"Thick)(.680"OD)(Teflon) 2005-Up	1	68019865AA

PART #	WASHERS & BEARINGS	QTY	REFERENCE #
172205A	Caged Needle Bearing, AS68RC (All) Pump Stator (Front)(.623"Thick)(1.262"OD) (Cast # NSK DB502713W) 2005-Up	1	
172209A	Caged Needle Bearing, AS68RC (All) Stator (Rear)(.468"Thick)(1.773"OD) (Cast # NSK DD503903W) 2005-Up	1	
172211A	Washer, AS68RC (All) Stator To 4-5-6 Clutch Drum (.076"Thick)(3.505"OD)(2.862"ID) (Plastic, 1 Tab) 2005-Up	1	68019787AA
172216A	Caged Needle Bearing, AS68RC (All) # 2 Planet (Front & Rear)(.580"Wide)(1.245"OD) (Cast # NSK DB502713W) 2005-Up	2	
172217A	Use U172223A	1	
172218A	Race, AS68RC (All) # 2 Planet To Sun Gear (.111"Thick)(1.925"OD)(1.265"ID) 2005-Up	1	68019862AA
172219A	Bearing W/Race, AS68RC (All) # 2 Planet To Sun Gear (.119"Thick)(1.855"OD)(1.150"ID) 2005-Up	1	68019900AA
172220A	Bearing W/Races, AS68RC (All) 1-2-3-4 (K1) Clutch Drum To Hub (.142"Thick)(1.565"OD) (.895"ID) 2005-Up	1	68019764AA

© Whatever It Takes Transmission Parts. Inc.

PART #	WASHERS & BEARINGS (Continued)	QTY	REFERENCE #
172223A	Bearing W/Races, AS68RC (All) 1-2-3-4 (K1) Clutch Hub To 4-5-6 (K2) Clutch Hub (.140"Thick) (2.730"OD)(2.118"ID) 2005-Up (Also Fits AS68RC (All) 4-5-6 (K2) Clutch Hub To # 1 Planet Sun Gear # 234 2005-Up)	1-2	68019902AA
	(Also Fits AS68RC (All) # 1 Planet Sun Gear To # 1 Planet # 235 2005-Up) (Also Fits AS67RC (All) # 2 Planet Ring Gear Hub To # 2 Planet # 217 2005-Up)	1-2	
172228A	Caged Needle Bearing, AS68RC (All) 4-5-6 (K2) Clutch Drum (Rear, Inner)(.630"Thick) (2.840"OD) 2005-Up	1	
172229A	Bearing W/Races, AS68RC (All) 3-5 Reverse (K3) Drum To Case (.143"Thick)(4.205"OD) (3.493"ID) 2005-Up (Also Fits AS68RC (All) Case To # 2 Planet Ring Gear Hub # 230 2005-Up)	1-2	68019904AA
172230A	Use U172229A	1	
172231A	Spacer, AS68RC (All) Stator To 1-2-3-4 (K1) Clutch Drum (.055"Thick)(3.710"OD)(3.180"ID) 2005-Up	1	68019661AA
172232AA	Race, AS68RC (All) Stator To 1-2-3-4 (K1) Clutch Drum (.032"Thick)(2.410"OD)(1.700"ID) 2005-Up	1	68019765AA
172232AC	Race, AS68RC (All) Stator To 1-2-3-4 (K1) Clutch Drum (.063"Thick)(2.410"OD)(1.700"ID) 2005-Up	1	68019767AA
172233A	Bearing W/Race, AS68RC (All) Stator To 1-2-3-4 (K1) Clutch Drum (.110"Thick)(2.323"OD) (1.545"ID) 2005-Up	1	68019786AA
172234A	Use U172223A	1	
172235A	Use U172223A	1	
172236A	Caged Needle Bearing, AS68RC (All) # 1 Planet (Front)(.585"Thick)(3.290"OD) 2005-Up	1	
172237A	Caged Needle Bearing, AS68RC (All) # 1 Planet (Rear)(.548"Thick)(2.179"OD) (Cast # NSK DB504901) 2005-Up	1	
172238A	Bearing W/Races, AS68RC (All) # 1 Planet To Ring Gear Hub (.142"Thick)(3.215"OD) (2.445"ID) 2005-Up (Also Fits AS68RC (All) # 1 Planet Ring Gear Hub To K3 Drum # 239 2005-Up)	1-2	68019861AA
172239A	Use U172238A	1	
172246A	Race, AS68RC (All) Sun Gear Shaft To # 3 Planet (.032"Thick)(1.725"OD)(.958"ID) 2005-Up	1	
172247A	Bearing W/Race, AS68RC (All) Sun Gear Shaft To # 3 Planet (.187"Thick)(1.835"OD)(1.020"OD) 2005-Up	1	
172254A	Spacer, AS68RC (All) # 3 Planet To Ring Gear Hub (.095"Thick)(2.995"OD)(2.370"ID) 2005-Up	1	
172255A	Bearing W/Races, AS68RC (All) # 3 Planet To Ring Gear Hub (.144"Thick)(3.065"OD)(2.385"ID) 2005-Up (Also Fits AS68RC (All) # 3 Planet Ring Gear Hub To Output Shaft # 256 2005-Up)	1-2	68019903AA
172256A	Use U172255A	1	
172268A	Ball Bearing, AS68RC (All) Output Shaft To Extension Housing (Front)(.707"Thick)(3.545"OD) (2.162"ID)(Cast # KOYO 6011) 2005-Up	1	
172270AA	Shim, AS68RC (All) Output Shaft Spacer To Rear Ball Bearing (.039"Thick)(2.110"OD)(1.702"ID) 2005-Up	1	68019860AA
172270AB	Shim, AS68RC (All) Output Shaft Spacer To Rear Ball Bearing (.047"Thick)(2.110"OD)(1.702"ID) 2005-Up	1	68019854AA
172270AC	Shim, AS68RC (All) Output Shaft Spacer To Rear Ball Bearing (.055"Thick)(2.110"OD)(1.702"ID) 2005-Up	1	68019855AA
172270AD	Shim, AS68RC (All) Output Shaft Spacer To Rear Ball Bearing (.063"Thick)(2.110"OD)(1.702"ID) 2005-Up	1	68019856AA
172270AE	Shim, AS68RC (All) Output Shaft Spacer To Rear Ball Bearing (.071"Thick)(2.110"OD)(1.702"ID) 2005-Up	1	68019857AA
172270AF	Shim, AS68RC (All) Output Shaft Spacer To Rear Ball Bearing (.079"Thick)(2.110"OD)(1.702"ID) 2005-Up	1	68019858AA
172271A	Ball Bearing, AS68RC (Chrysler) Output Shaft (Rear) To Extension Housing (.668"Thick) (3.230"OD)(1.690"ID)(Cast # KOYO DG4382) 2007-Up	1	68020045AA
172271B	Ball Bearing, AS68RC (Isuzu) Output Shaft (Rear) To Extension Housing (.668"Thick)(3.150"OD) (1.690"ID)(Cast # KOYO DG4180) 2005-Up	1	
172285A	Washer, AS68RC (All) Sprag Brass Caps (.200"Thick)(4.795"OD)(4.050"ID)(Front & Rear) 2005-Up	2	

PART #	GASKETS & RUBBER COMPONENTS	QTY	REFERENCE #
172300AF	Gasket, AS68RC (All) Bottom Pan (Duraprene) 2005-Up	1	68020049AA
172305A	Gasket, AS68RC (All) Extension Housing To Case (11 Holes, 10 Are Bolt Holes) 2005-Up	1	68020050AA
172310A	Gasket, AS68RC (All) Pump To Case (11 1/8"OD) 2005-Up	1	68019671AA
172311A	O-Ring, AS68RC (All) Pump Body (.122"ThIck)(11 3/16"OD) 2005-Up	1	68019669AA

PART #	TECHNICAL MANUALS	QTY	REFERENCE #
172400A	Technical Manual, AS68RC 2007-Up (ATSG)	1	

© Whatever It Takes Transmission Parts. Inc.

PART #	ELECTRICAL COMPONENTS	QTY	REFERENCE #
172410A	Switch, AS68RC (All) Neutral Safety (Cast # 135593) 2005-Up	1	68020005AA
172411A	Switch, AS68RC (All) Pressure (1/8" NPT Thread)(Isuzu/Dodge)(12 Volt) 2005-Up	5	68019699AA
172413A	Switch, AS68RC (All) Pressure (1/4" NPT Thread)(Isuzu/Dodge)(12 Volt) 2005-Up	3	68019700AA
172421A	Solenoid, AS68RC (All) Shift # 3 (W/1 Bolt Bracket) 2005-Up (Also Fits AS68RC (All) Shift # 1 (# 422), # 2 (# 423), & # 4 (# 440) 2005-Up)	1-4	68019702AA
172422A	Use U172421A	1	
172423A	Use U172421A	1	
172425A	Solenoid, AS68RC (All) "C" Linear (PWM)(TCC, Forward & Reverse Clutch)(.667"OD Nose, Uses A Orange O-Ring) 2005-Up (Also Fits AS68RC (All) "A" Linear (PWM)(B1, K1, K2 Clutch)# 431)(Also Fits AS68RC (All) "D" Linear (PWM)(Line Pressure) # 428) (CanUse 116431A Also)	1-4	
116431A	Solenoid, AS68RC Linear #425 (C), #428 (D), & #431 (A) 2005-Up	1-3	
172428A	Use 172425A Or 116431A	1	
172430A	Solenoid, AS68RC (All) "B" Linear (PWM)(B2 & K3 Clutch Pressure)(.647"OD Nose, Uses A Tan O-Ring) 2005-Up (Can Use 116435A Also)	1	
116435A	Solenoid, AS68RC Linear # 430 (B) 2005-Up	1	
172431A	Use 172425A Or 116431A	1	
172432A	Seal, AS68RC (All)(Rubber Tube) Valve Body To Case (.370"Thick)(.570"OD)(.385"ID) 2005-Up	4	68020048AA
172436A	Sensor, AS68RC (Chrysler) OSS (2 Blade Connector)(1.960"Long) 2007-Up	1	68019930AA
172438A	Sensor, AS68RC (All) ISS (On Case)(2 Blade, Black Oval Connector)(2.070"Long) 2005-Up	1	68020003AA
172440A	Use U172421A	1	
172441A	Switch, AS68RC (All) Converter Temperature (19mm)(2 Blade, White Oval Connector) (Screws Onto The Cooler Line Fitting) 2005-Up	1	68020004AA
172446A	Wire Harness, AS68RC (10 Blade Rectangle Case Connector) (W/4 Black One Wire Connector, W/1 Blue Two Wire Connector, W/2 Yellow Two Wire Connector) 2005-Up	1	68020011AB
172446AA	Wire Harness, AS68RC (10 Blade Rectangle Case Connector)(W/2 Green One Wire Connector, 2 Tan Connectors, 1 Black One Wire Connector, 1 Black Temperature Sensor With 2 Wires) 2005-Up	1	
172446AB	Wire Harness, AS68RC (10 Blade Rectangle Case Connector)(W/2 Black One Wire Connector, 2 Yellow Two Wire Connector, 2 White Connectors) 2005-Up	1	
172446B	Wire Harness, AS68RC (12 Blade Rectangle Case Connector)(W/4 White One Wire Connector, 4 Black One Wire Connector, 2 Yellow Two Wire Connectors) 2005-Up	1	

PART #	HARDPARTS	QTY	REFERENCE #
172510A	Pump Body, AS68RC (Chrysler) W/Gears (Cast Iron)(11 Bolts To Case)(11 1/8"OD) 2005-Up	1	
172510AA	Pump Body, AS68RC (Chrysler) W/Gears (Cast Iron)(11 Bolts To Case)(11 1/8"OD) (10.885"ID Of Lip) 2009-Up	1	
172510B	Pump Body, AS68RC (Isuzu) W/ Gears (Cast Iron)(11 Bolts To Case)(11 1/8"OD) 2005-Up	1	
172520A	Stator, AS68RC (Chrysler)(Cast Iron)(11 1/8"OD)(4 1/4" Tube)(Has 2 Sets Of 24 Splines On Converter End) (1.438"ID Ring Bore) 2007-08	1	
172520AA	Stator, AS68RC (Chrysler)(Cast Iron)(11 1/8"OD)(4 1/4" Tube)(Has 2 Sets Of 24 Splines On Converter End)(1.488"ID Ring Bore) 2009-Up	1	
172520B	Stator, AS68RC (Isuzu)(Cast Iron)(11 1/8"OD)(4" Tube)(Has 2 Sets Of Splines On Converter End, 16 Outer & 24 Inner) (16 Long & 32 Short Splines) 2005-08	1	
172530A	Pump Gear Set, AS68RC (All) (.511"ThICk)(4.720"OD) 2005-Up	1	
172552A	Drum, AS68RC (Chrysler) 1-2-3-4 (K1) Clutch W/Input Shaft (12 1/8"Tall)(6 Clutch) 2007-08	1	68019771AA
172552B	Drum, AS68RC (Isuzu/Mitsubishi) 1-2-3-4 (K1) Clutch W/Input Shaft (11 5/8"Tall)(6 Clutch) 2005-08	1	
172554A	Drum, AS68RC (Chrysler) 4-5-6 (K2) Clutch (5 Clutch)(.665" From Edge Of Drum To Snap Groove) 2007-Up	1	68037644AA
172554B	Drum, AS68RC (Isuzu) 4-5-6 (K2) Clutch (4 Clutch)(.850" From Edge Of Drum To Snap Ring Groove) 2005-Up	1	
172555A	Drum, AS68RC (Chrysler) 3-5 Reverse (K3) Clutch (5 Clutch)(.225" From Edge Of Drum To Snap Ring Groove) 2007-Up	1	68019741AA
172555B	Drum, AS68RC (Isuzu/Mitsubishi) 3-5 Reverse (K3) Clutch (4 Clutch)(.405" From Edge Of Drum To Snap Ring Groove) 2005-Up	1	
172560A	Piston Kit, AS68RC (All) 2-6 (B1) Clutch 2005-Up	1	
172562A	Piston Kit, AS68RC (All)(Alum Piston & Bonded Retainer) 2005-Up	1	
172564A	Piston Kit, AS68RC (All) 4-5-6 (K2) Clutch (Piston Cast #345652-31010) 2005-Up	1	
172565A	Piston Kit, AS68RC (All) 3-5 Reverse (K3) Clutch (Piston Cast #344612-31010) 2005-Up	1	
172567A	Piston Kit, AS68RC (All) Low/Reverse (B2) Clutch (Piston Cast# 345923-31010) 2005-Up	1	
172572A	Hub, AS68RC (All) 1-2-3-4 (K1) Clutch (2.425"Tall)(1.500"OD Rear Nose) 2005-Up	1	
172574A	Hub, AS68RC (Chrysler) 4-5-6 (K2) Clutch (60 Teeth Clutch Splines)(4.495"Tall) 2007-Up	1	68019788AA
172574B	Hub, AS68RC (Isuzu/Mitsubishi) 4-5-6 (K2) Clutch (32 Teeth Clutch Splines)(4.495"Tall) 2005-Up	1	
172580A	Planet, AS68RC (Chrysler) # 2 (4 Gear, 2 Grooves)(Round Top Housing)(12 Lugs) 2007-Up	1	68019893AA

© Whatever It Takes Transmission Parts. Inc.

PART #	HARDPARTS (Continued)	QTY	REFERENCE #
172580B	Planet, AS68RC (Isuzu/Mitsubishi) # 2 (4 Gear, 2 Grooves)(Square Top Housing)(12 Lugs) 2005-Up	1	
172582A	Planet, AS68RC (Chrysler) # 1 (Front) (W/1 Piece Pin Retainer)(6 Gear) 2007-Up	1	68019892AA
172582B	Planet, AS68RC (Isuzu/Mitsubishi) # 1 (Front)(W/3 Piece Pin Retainer)(6 Gear) 2005-Up	1	
172584A	Planet. AS68RC (Chrysler) # 3 (Rear)(3.960"Tall)(42 Splines On Rear Nose)(Pin Retainer Has 4 Straight Legs) 2007-Up (Can Use 172584B)	1	68019894AA
172584B	Planet, AS68RC (Isuzu/Mitsubishi) # 3 (Rear)(3.960"Tall)(42 Splines On Rear Nose)(Pin Retainer Has 4 Bent Legs) 2005-Up (Can Use 172584A)	1	
172590A	Ring Gear, AS68RC (Chrysler) # 2 Planet (W/.080"Wide Snap Ring Groove)(12 Lugs)(82 Teeth) 2007-Up	1	68019875AA
172590B	Ring Gear, AS68RC (Isuzu/Mitsubishi) # 2 Planet (W/.065"Wide Snap Ring Groove)(12 Lugs) (82 Teeth) 2005-Up	1	
172592A	Ring Gear, AS68RC (All) # 1 Planet (100 Teetht)(1.875"Thick) 2005-Up	1	68019866AA
172594A	Ring Gear, AS68RC (All) # 3 Planet (3.030"Tall)(12 Lugs On Each End)(60 Outer Clutch Splines) (85 Teeth) 2005-Up	1	
172600A	Hub, AS68RC (All) # 2 Planet Ring Gear (2.660"Tall)(12 Lugs) 2005-Up	1	68019869AA
172602A	Hub, AS68RC (Chrysler) # 1 Planet Ring Gear (.410"Thick)(6.060"OD)(2.522"ID) 2007-Up	1	68019867AA
172602B	Hub, AS68RC (Isuzu/Mitsubishi) # 1 Planet Ring Gear (.320"Thick)(6.060"OD)(2.522"ID) 2005-Up	1	
172604A	Hub/Inner Race, AS68RC (All) # 3 Planet (Inner Sprag Race)(12 Lugs)(1.860"Thick)(4.050"OD Sprag Outer Race) 2005-Up	1	68019878AA
172610A	Sun Gear Shaft, AS68RC (All) (38 Teeth Left Angle & 31 Teeth Right Angle Gears) (15 11/16"Long) 2005-Up	1	68019891AA
172612A	Sun Gear, AS68RC (Chrysler) # 1 Planet (12 Holes)(69 Teeth PTO Gear)(49 Teeth Sun Gear) (20 Lug Reluctor) 2007-Up	1	68019889AB
172612B	Sun Gear, AS68RC (Isuzu/Mitsubishi) # 1 Planet (6 Holes)(69 Teeth PTO Gear)(49 Teeth Sun Gear)(20 Lug Reluctor) 2005-Up	1	
172652A	Sprag, AS68RC (All) (Lug Type) (34 Elements) 2005-Up	1	68019897AA
172663A	Outer Race, AS68RC (All) Sprag (8 Lugs)(1.650"Thick)(4.790"ID) 2005-Up	1	68085967AA
172678AA	Output Shaft, AS68RC (Chrysler) 4X4 (8 1/8"Long)(29 Splines)(W/Threaded Hole In Splines End) 2007-Up	1	68086969AA
172678B	Output Shaft, AS68RC (Isuzu/Mitsubishi 2WD)(8 1/8"Long)(24 Splines On Rear)(W/Threaded End For Yoke Nut) 2005-Up	1	
172690A	Park Gear, AS68RC (All)(16 Lug) (2.475"Thick)(7 1/8"OD)(Presses Onto Output Shaft) 2005-Up	1	
172698A	Retainer, AS68RC (All) (Bonded) # 1 Planet (Front)(.260"Thick)(5.910"OD)(3.570"ID) 2005-Up	1	
172740A	Valve Body, AS68RC (Chrysler)(8 Solenoids)(Cast # 31020 On Upper Section, 2A On Plate) 2007-Up	1	
172740B	Valve Body, AS68RC (Isuzu)(8 Solenoids)(Cast # 31010 On Upper Section, 00 On Plate) 2005-Up	1	

PART #	VALVE BODY PARTS	QTY	REFERENCE #
S172741S-1K	Plunger Valve Kit, AS68RC Clutch Control (Dodge)(Contains: 1 Valve & 1 Sleeve)(Sonnax)	1	
S172741S-3K	Spring Kit, AS68RC Clutch Control Valve (Contains 2 Springs)(Fits Mitsubishi & Isuzu) (Sonnax)	1	

PART #	HARDPARTS (Continued)	QTY	REFERENCE #
172750A	Bell Housing, AS68RC (Chrysler)(8 1/8" Top Bolts)(Starter At 9:00)(6 1/8"Thick)(Has No Sensor) 2007-Up	1	68020022AA
172750B	Bell Housing, AS68RC (Isuzu)(7 1/8" Top Bolts)(Starter At 2:00)(8 3/4"Thick)(W/Sensor Hole) 2005-Up	1	
172757A	PTO Cover, AS68RC (All)(6 Bolt, Tin)(6 3/4" X 5 5/16") 2005-Up	1	68020029AA
172760A	Case, AS68RC (Chrysler)(W/Dipstick Hole)(W/Sensor Hole On The Drivers Side) 2007-Up	1	68020008AB
172760B	Case, AS68RC (Isuzu)(No Dipstick Hole)(W/Sensor Hole On Top Of Case) 2005-Up	1	
172765A	Pan, AS68RC (Chrysler)(No Dipstick Tube)(4 1/2" At Deep End)(18 Bolt) 2007-Up	1	68085954AA
172765B	Pan, AS68RC (Isuzu)(W/Dipstick Tube)(3 1/4" At Deep End)(18 Bolt) 2005-Up	1	
172770AA	Extension Housing, AS68RC (Chrysler) 4X4 (Aluminum)(7 3/8"Thick) 2007-Up	1	68020126AB
172770B	Extension Housing, AS68RC (Isuzu) 2WD (Aluminum)(6"Thick)(8 Threaded Mount Bosses) 2005-Up	1	
172774B	Speed-O Housing, AS68RC (Isuzu)(Aluminum) (19 Teeth Metal Gear) 2005-Up	1	
172776AK	Bolt Set, AS68RC (All) Bell Housing To Case (10 Pieces) 2005-Up	1	
172777AK	Bolt Set, AS68RC (All) Pump To Case (11 Pieces) 2005-Up	1	
172778AK	Bolt Set, AS68RC (All) Stator To Pump Body (9 Pieces) 2005-Up	1	
172779AK	Bolt Set, AS68RC (All) Bottom Pan To Case (18 Pieces) 2005-Up	1	
172781AK	Bolt Set, AS68RC (Chrysler) Extension Housing To Case (10 Pieces) 2007-Up	1	
172781BK	Bolt Set, AS68RC (Isuzu/Mitsubishi) Extension Housing To Case (10 Pieces) 2005-Up	1	
172783AK	Bolt Set, AS68RC (All) Holds # 1 Planet To Case (2 Pieces) 2005-Up	1	6820035AA

© Whatever It Takes Transmission Parts. Inc.

172798B ..... Nut, AS68RC (Isuzu) Output Shaft Yoke (36mm)(6 Point W/Flange)(1.985”OD) 2005-Up ..... 1 .....
172847A ..... Spacer, AS68RC (Chrysler) Output Shaft Front Bearing To Extension Housing (1.180”Thick)
..... (2.230”OD) 2007-Up ..... 1 ..... 68020034AA
172847B ..... Speed-O Gear, AS68RC (Isuzu) Drive (5 Teeth)(1.180”Thick)(2.255”OD) 2005-Up ..... 1 .....
172861A ..... Use U172862A ..... 1 .....
172862A ..... Snap Ring, AS68RC (All) Holds 2-6 (B1) Clutch Return Spring In (.078”Thick)(8 3/4”OD)
..... 2005-Up (Also Fits AS68RC (All) Holds 2-6 (B1) Clutch Pressure Plate In # 861 2005-Up) ..... 1-2 ..... 68019847AA
172868A ..... Snap Ring, AS68RC (Chrysler) Holds # 2 Planet Ring Gear Hub To Ring Gear (.070”Thick)
..... (5.545”OD) 2007-Up ..... 1 ..... 68019870AA
172868B ..... Snap Ring, AS68RC (Isuzu/Mitsubishi) Holds # 2 Planet Ring Gear Hub To Ring Gear
..... (.048”Thick)(5.665”OD) 2005-Up ..... 1 .....
172873A ..... Snap Ring, AS68RC (All) Holds 1-2-3-4 (K1) Clutch Pressure Plate In (.069”Thick)(6 1/4”OD)
..... 2005-Up ..... 1 ..... 68019784AA
172874A ..... Snap Ring, AS68RC (All) Holds 1-2-3-4 (K1) Clutch Return Spring In (.048”Thick)(1.605”OD)
..... 2005-Up ..... 1 ..... 68019783AA
172876A ..... Snap Ring, AS68RC (All) Holds 4-5-6 (K2) Clutch Pressure Plate In (.069”Thick)(8 3/4”OD)
..... 2005-Up ..... 1 ..... 68019763AA
172877A ..... Snap Ring, AS68RC (All) Holds 4-5-6 (K2) Clutch Spring Retainer In (.048”Thick)(3.220”OD)
..... 2005-Up ..... 1 ..... 68019798AA
172878A ..... Snap Ring, AS68RC (All) Holds 3-5 Reverse (K3) Clutch Pressure Plate In (.069”Thick)
..... (8 3/4”OD) 2005-Up ..... 1 ..... 68019763AA
172879A ..... Snap Ring, AS68RC (All) Holds 3-5 Reverse (K3) Clutch Return Spring In (.048”Thick)
..... (3.520”OD) 2005-Up ..... 1 ..... 68019762AA
172882A ..... Snap Ring, AS68RC (All) Holds # 1 Planet Ring Gear Hub To Ring Gear (.048”Thick)(6 1/2”OD)
..... 2005-Up ..... 1 ..... 68019868AA
172883A ..... Snap Ring, AS68RC (All) Holds # 1 Planet In Case (.079”Thick)(9 3/8”OD)(W/Eyelets On Bent
..... Ends) 2005-Up ..... 1 ..... 68020036AA
172884A ..... Snap Ring, AS68RC (All) Holds Bonded Retainer # 698 To # 1 Planet (.048”Thick)(6 7/16”OD)
..... 2005-Up ..... 1 .....
172885A ..... Snap Ring, AS68RC (All) Holds Low/Reverse (B2) Clutch Pressure Plate In (.078”Thick)
..... (8 3/4”OD) 2005-Up ..... 1 ..... 68019847AA
172886A ..... Snap Ring, AS68RC (All) Holds Low/Reverse (B2) Clutch Return Spring In (.060”Thick)
..... (4.418”OD) 2005-Up ..... 1 ..... 68020046AA
172887A ..... Snap Ring, AS68RC (All) Holds Sprag To Outer Race (Front/Rear)(.039”Thick)(5.200”OD)
..... 2005-Up ..... 2 ..... 68019899AA
172889A ..... Snap Ring, AS68RC (Chrysler) Holds # 3 Planet Ring Gear Hub To Ring Gear (.060”Thick)
..... (5.765”OD) 2007-Up ..... 1 .....
172889B ..... Snap Ring, AS68RC (Isuzu/Mitsubishi) Holds # 3 Planet Ring Gear Hub To Ring Gear
..... (.049”Thick)(5.765”OD) 2005-Up ..... 1 .....
172890A ..... Snap Ring, AS68RC (All) Holds Sprag Outer Race To Case (.080”Thick)(8 7/8”OD) 2005-Up ..... 1 ..... 68019905AA
172895A ..... Snap Ring, AS68RC (Chrysler) Holds Rear Output Shaft Ball Bearing To Extension Housing
..... (.064”Thick)(3.405”OD) 2007-Up ..... 1 ..... 68020047AA
172931A ..... Spring, AS68RC (Chrysler) Accumulator “C” (In Case On Passenger Side, The Rear One)
..... (Blue)(2.022”Long)(.597”OD) 2007-Up ..... 1 ..... 68019684AA
172931B ..... Spring, AS68RC (Isuzu) Accumulator “C” (In Case On Passenger Side The Rear One)(Green)
..... (1.976”Long)(.597”OD) 2005-Up ..... 1 .....
172932A ..... Piston, AS68RC (All) Accumulator “C” (In Case On Passenger Side,The Rear One)(1.550”Long)
..... (.785”OD)(.630”ID) 2005-Up ..... 1 ..... 68019687AA
172941A ..... Spring, AS68RC (All) Accumulator “A” (In Case On Drivers Side)(Purple)(1.705”Long)(.435”OD)
..... 2005-Up ..... 1 ..... 68019682AA
172942A ..... Piston, AS68RC (All) Accumulator “A” (In Case On Drivers Side)(1.583”Long)(.630”OD)(.470”ID)
..... 2005-Up ..... 1 ..... 68019685AA
172946A ..... Spring, AS68RC (Chrysler) Accumulator “B” (In Case On Passenger Side, The Front One)
..... (Outer Spring)(Pink)(2.420”Long)(.590”OD) 2007-Up ..... 1 ..... 68019683AA
172946AA ..... Spring, AS68RC (Chrysler) Accumulator “B” (In Case On Passenger Side, The Front One)
..... (Inner Spring)(Orange)(1.755”Long)(.410”OD) 2007-Up ..... 1 .....
172946B ..... Spring, AS68RC (Isuzu) Accumulator “B” (In Case On Passenger Side The Front One)
..... (Dark Green)(2.585”Long)(.603”OD) 2005-Up ..... 1 .....
172947A ..... Piston, AS68RC (All) Accumulator “B” (In Case On Passenger Side, The Front One)
..... (1.505”Long)(.785”OD)(.630”ID) 2005-Up ..... 1 ..... 68019686AA
172960A ..... Piston, AS68RC (All) 2-6 (B1) Clutch (Aluminum)(1.330”Thick)(8”OD)(28 Spring Pockets)
..... 2005-Up ..... 1 ..... 68019811AA
172962A ..... Piston. AS68RC (All) 1-2-3-4 (K1) Clutch (Aluminum)(1.870”Thick)(5.775”OD)(1.582”ID)
..... 2005-Up ..... 1 ..... 68019772AA
172962CK ..... Piston Kit, AS69RC 2013-Up (Includes K1 & K3 Balance Pistons)(Bonded) ..... 1 .....
172964A ..... Piston, AS68RC (All) 3-4-6 (K2) Clutch (Aluminum)(1.835”Thick)(8”OD)(3.215”ID)
..... (Cast # 345652-31010) 2005-Up ..... 1 ..... 68019795AB
172962AK ..... Piston Kit, AS68RC (K2 Clutch)(High Capacity)(Aluminum) (Combines A Thinner Billet Aluminum
..... K2 Piston, A Thinner Backing Plate and a Retaining Ring) ..... 1 .....

© Whatever It Takes Transmission Parts. Inc.

PART #	HARDPARTS (Continued)	QTY	REFERENCE #
172965A	Piston, AS68RC (All) 3-5 Reverse (K3) Clutch (Aluminum)(1.672”Thick)(3.660”ID) (Cast # 344612-31010) 2005-Up	1	68019743AA
172967A	Piston, AS68RC (All) Low/Reverse (B2) Clutch (4.062”Thick)(7 7/8”OD)(4.525”ID) (Cast # 345923-31010) 2005-Up	1	68020131AA
172970A	Spring/Retainer, AS68RC (All) 2-6 (B1) Clutch Return (1.080”Thick)(8 1/16”OD)(6 1/2”ID) (28 Springs) 2005-Up	1	68019800AB
172972A	Spring/Retainer, AS68RC (All) 1-2-3-4 (K1) Clutch Return (1.760”Thick)(3.280”OD) (16 Springs) 2005-Up	1	68019770AA
172974A	Spring/Retainer, AS68RC (All) 4-5-6 (K2) Clutch (28 Coil Springs)(1.275”Thick)(5.610”OD) (4.495”ID) 2005-Up	1	68019792AA
172975A	Spring/Retainer, AS68RC (All) 3-5 Reverse (K3) Clutch Return (1.265”Thick)(6.040”OD) (30 Springs) 2005-Up	1	68019742AA
172977A	Spring/Retainer, AS68RC (All) Low/Reverse (B2) Clutch Return (1.425”Thick)(6.125”OD) (28 Springs) 2005-Up	1	68020042AA
172982A	Retainer/Piston, AS68RC (All) 1-2-3-4 (K1) Clutch Spring (Bonded)(1.195”Thick)(4.895”OD) (1.505”ID) 2005-Up	1	68019773AA
172984A	Retainer/Piston, AS68RC (All) 4-5-6 (K2) Clutch Return Spring (Aluminum)(1.280”Thick) (6 1/2”OD)(3.160”ID) 2005-Up	1	68019796AA
172985A	Retainer/Piston, AS68RC (All) 3-5 Reverse (K3) Clutch Return Spring (.810”Thick)(6 7/8”OD) (3.505”ID)(30 Spring Pockets) 2005-Up	1	68019744AA
172991-2A	Spring, AS68RC (All) Detent (.990”Wide)(4.520”Long) 2005-Up	1	68019737AA
172991-3A	Rooster Comb, AS68RC (All) 2005-Up	1	68019913AA
172991-4A	Manual Shaft, AS68RC (Chrysler) (12 13/16”Long) 2007-Up	1	6820031AA
172991-4B	Manual Shaft, AS68RC (Isuzu) (12 1/2”Long) 2005-Up	1	
172962C	Piston, AS669RC K1 Balance 2013-Up	1	
172965C	Piston, AS69RC K3 Balance 2013-Up		
172994A	Park Rod Actuator, AS68RC (All) (9”Long) 2005-Up	1	68019912AA
172995A	Park Pawl Assembly, AS68RC (All) (4 Pieces) 2005-Up	1	
172996A	Fitting, AS68RC (Chrysler) Cooler Line (22mm)(W/2 Clips & Sensor Hole)(Push-In Line) 2007-Up	1	68020015AA
172996AA	Fitting, AS68RC (Chrysler) Cooler Line (22mm)(No Sensor Hole)(Push-In Line) 2007-Up	1	68020014AA
172996B	Fitting, AS68RC (Isuzu) Cooler Line (19mm)(W/Sensor Hole)(Screw-In Line) 2005-Up	1	
172996BA	Fitting, AS68RC (Isuzu) Cooler Line (19mm)(No Sensor Hole)(Screw-In Line) 2005-Up	1	

© Whatever It Takes Transmission Parts. Inc.

© Whatever It Takes Transmission Parts. Inc.

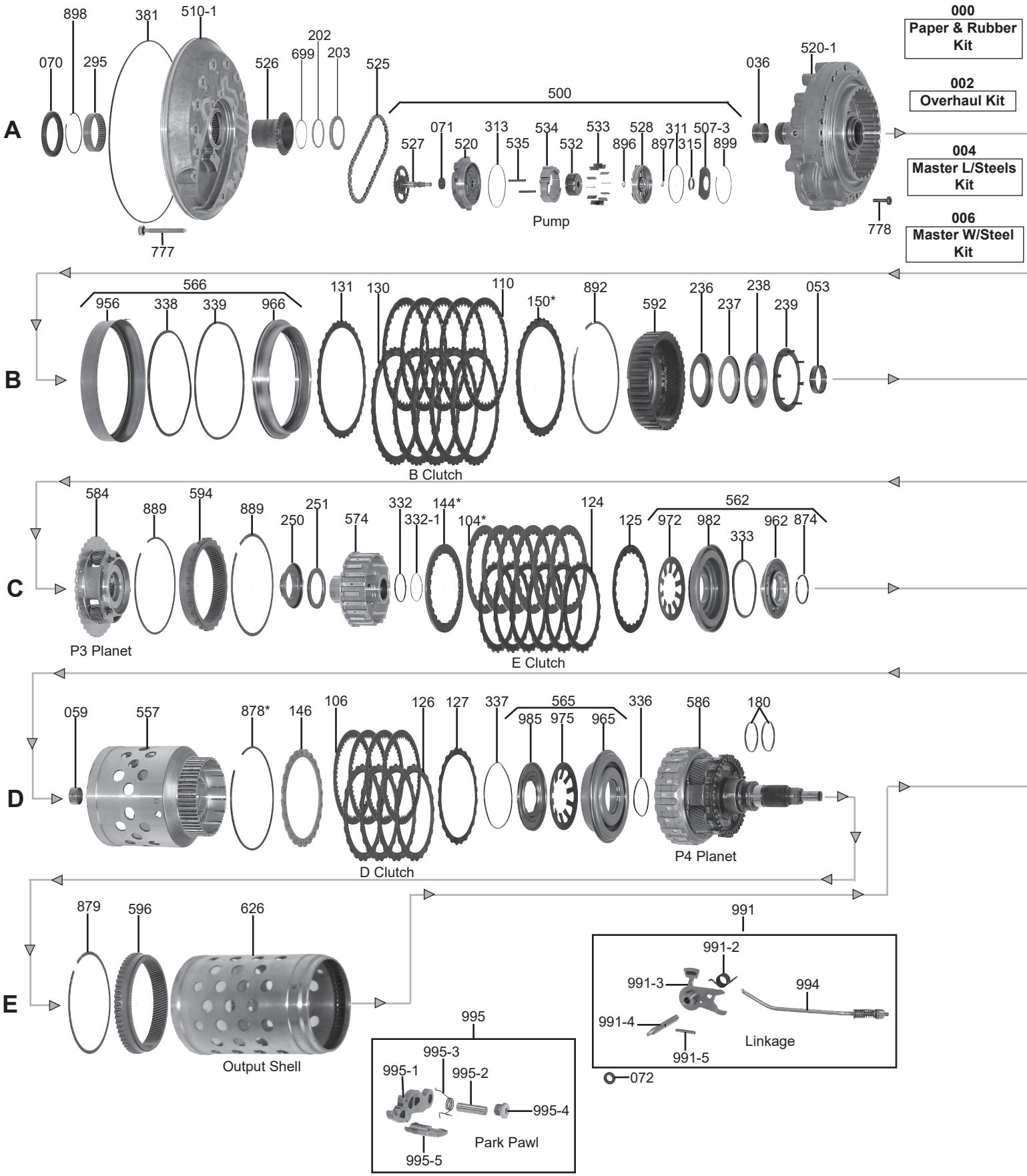
A
898
381
510-1
070
295
526
202
699
203
525
500
071
313
534
533
528
311
507-3
527
520
535
532
896
897
315
899
036
520-1
778
777
Pump
000
Paper & Rubber Kit
002
Overhaul Kit
004
Master L/Steels Kit
006
Master W/Steel Kit
B
566
956
338
339
966
131
130
110
150*
892
592
236
237
238
239
053
B Clutch
C
584
889
594
889
250
251
574
332
332-1
144*
104*
124
125
562
972
982
333
962
874
P3 Planet
E Clutch
D
059
557
878*
146
106
126
127
337
565
985
975
965
336
586
180
D Clutch
P4 Planet
E
879
596
626
Output Shell
991
991-2
991-3
994
991-4
991-5
Linkage
072
995
995-3
995-1
995-2
995-4
995-5
Park Pawl

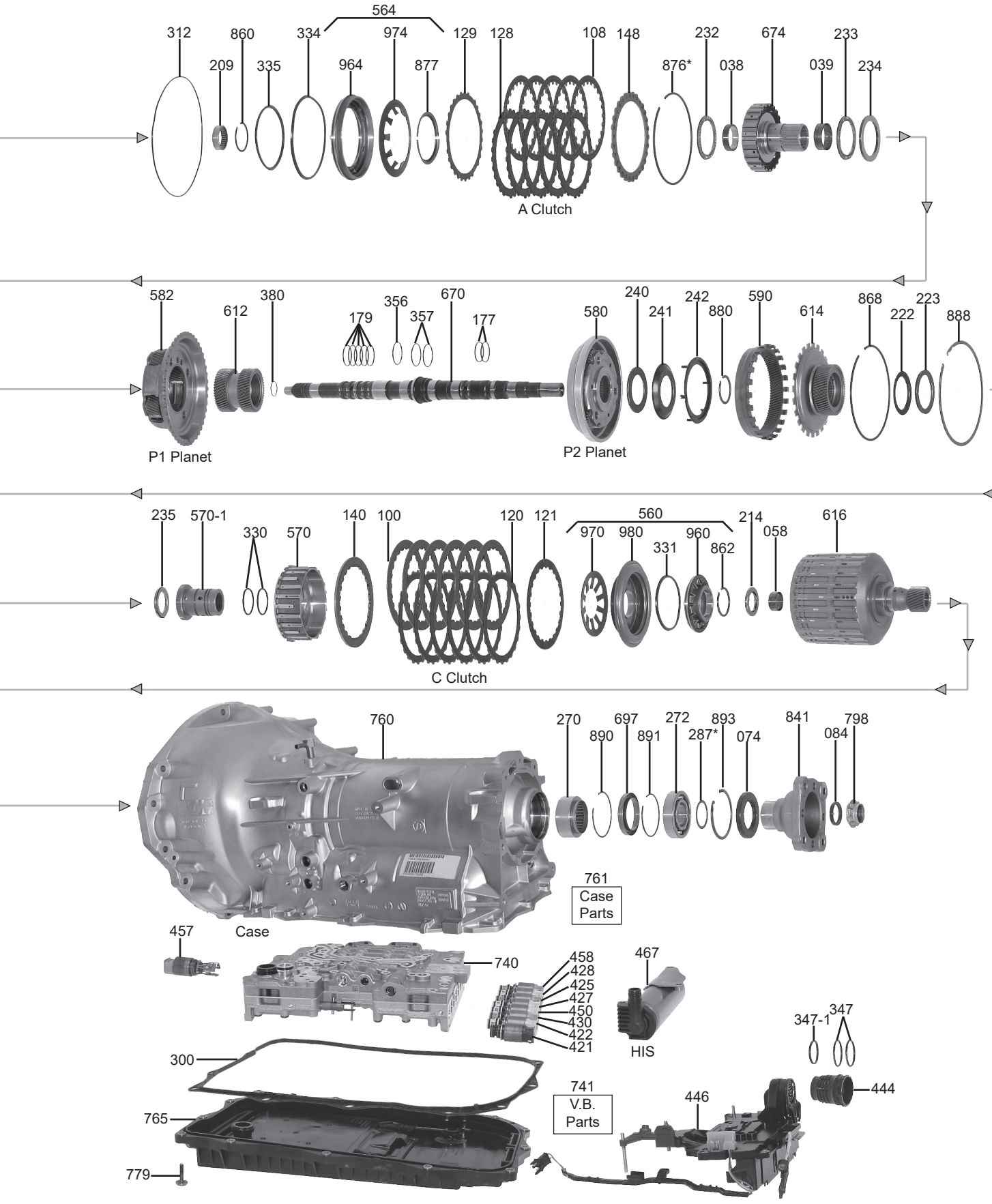

CHRYSLER

© Whatever It Takes Transmission Parts. Inc.

PART #	PAPER & RUBBER KITS	QTY	REFERENCE #
319000A	Paper & Rubber Kit, 845RE 2012-Up	1	

PART #	OVERHAUL KITS	QTY	REFERENCE #
319002A	Overhaul Kit, 845RE 2012-Up	1	

PART #	MASTER L/STEELS KITS	QTY	REFERENCE #
319004A	Master L/Steels Kit, 845RE 2012-Up	1	

PART #	MASTER W/STEELS KITS	QTY	REFERENCE #
319006A	Master W/Steels Kit, 845RE 2012-Up	1	

PART #	FILTERS	QTY	REFERENCE #
319765A	Pan, 845RE Bottom (Plastic, With Filter)	1	

PART #	BUSHINGS	QTY	REFERENCE #
319030A	Bushing Kit, ZF8HP45 (ZF845RE) 2011-Up	1	
319036A	Bushing, 845RE Stator (Front)(.600" Wide)(1.208"OD)(1.087"ID) 2012-Up	1	
319038A	Bushing, 845RE A Clutch Hub (Front)(.318" Wide)(1.300"ID) 2012-Up	1	
319039A	Bushing, 845RE A Clutch Hub (Rear)(.475" Wide)(1.320"ID) 2012-Up	1	
319053A	Bushing, 845RE P1 Planet (.386" Wide)(1.693"ID) 2012-Up	1	
319058A	Bushing, 845RE P4 Planet Sun Gear (Front)(.400" Wide)(1.040"ID) 2012-Up	1	
319059A	Bushing, 845RE P4 Planet Sun Gear (Rear)(.400" Wide)(.875"ID) 2012-Up	1	

PART #	METAL CLAD SEALS	QTY	REFERENCE #
319070A	Seal, 845RE Front (2.800"OD)(2.050"ID) 2012-Up	1	
319071A	Seal, 845RE Pump Shaft (.830"OD)(.432"ID) 2012-Up	1	
319072A	Seal, 845RE Manual Lever (.710"OD)(.392"ID) 2012-Up	1	
319074A	Seal, 845RE Rear Output Shaft (2.835"OD)(1.730"ID) 2012-Up	1	
319084A	Seal, 845RE Yoke (Rear) To Nut (1.397"OD)(1.102"ID) 2012-Up	1	

PART #	FRICTION CLUTCH	QTY	REFERENCE #
319100A	Use 319104A	6	
319104A	Friction, 845RE E Clutch (.083")(24 Outer Teeth)(4.552"ID) 2012-Up (Also Fits #100)	6-12	
319106A	Friction, 845RE D Clutch (.085")(54 Teeth)(5.810"OD) 2012-Up	4	
319108A	Friction, 845RE A Clutch (.061")(24 Teeth)(5.110"OD) 2012-Up	5	
319110A	Friction, 845RE B Clutch (.081")(38 Teeth)(7"OD) 2012-Up	5	

PART #	STEEL CLUTCH	QTY	REFERENCE #
319120A	Use 319124A	6	
319121A	Use 319125A	1	
319124A	Steel, 845RE E Clutch (.083")(24 Inner Teeth)(5.454"OD) 2012-Up (Also Fits #120)	6-12	
319125A	Steel, 845RE E Clutch (.023")(24 Inner Teeth)(5.447"OD)(Waved) 2012-Up (Also Fits #121)	1-2	
319126A	Steel, 845RE D Clutch (.082")(24 Teeth)(4.950"ID) 2012-Up	4	
319127A	Steel, 845RE D Clutch (.020")(24 Teeth)(5.046"ID)(Waved) 2012-Up	1	
319128A	Steel, 845RE A Clutch (.069")(27 Teeth)(4.208"ID) 2012-Up	5	
319129A	Steel, 845RE A Clutch (.037")(27 Teeth)(4.410"ID)(Waved) 2012-Up	1	
319130A	Steel, 845RE B Clutch (.071")(36 Teeth)(6.125"ID) 2012-Up	5	
319131A	Steel, 845RE B Clutch (33 Teeth)(6 1/8"ID)(Waved) 2012-Up	1	

PART #	PRESSURE PLATES	QTY	REFERENCE #
319140A	Use 319144AA	1	
319144AA	Pressure Plate, 845RE E Clutch (.118")(24 Inner Teeth)(5.452"OD) 2012-Up (Also Fits #140)	1-2	
319144AB	Pressure Plate, 845RE E Clutch (.129")(24 Inner Teeth)(5.452"OD) 2012-Up (Also Fits #140)	1-2	
319144AC	Pressure Plate, 845RE E Clutch (.141")(24 Inner Teeth)(5.452"OD) 2012-Up (Also Fits #140)	1-2	
319144AD	Pressure Plate, 845RE E Clutch (.153")(24 Inner Teeth)(5.452"OD) 2012-Up (Also Fits #140)	1-2	
319144AE	Pressure Plate, 845RE E Clutch (.165")(24 Inner Teeth)(5.452"OD) 2012-Up (Also Fits #140)	1-2	
319144AF	Pressure Plate, 845RE E Clutch (.177")(24 Inner Teeth)(5.452"OD) 2012-Up (Also Fits #140)	1-2	
319144AG	Pressure Plate, 845RE E Clutch (.188")(24 Inner Teeth)(5.452"OD) 2012-Up (Also Fits #140)	1-2	
319146A	Pressure Plate, 845RE D Clutch (.119")(24 Teeth)(4.952"ID) 2012-Up	1	

© Whatever It Takes Transmission Parts. Inc.

319148A	Pressure Plate, 845RE A Clutch (.119")(27 Teeth)(4.210"ID) 2012-Up	1	
319150AA	Pressure Plate, 845RE B Clutch (.188")(36 Teeth)(6.100"ID) 2012-Up	1	
319150AB	Pressure Plate, 845RE B Clutch (.196")(36 Teeth)(6.100"ID) 2012-Up	1	
319150AC	Pressure Plate, 845RE B Clutch (.204")(36 Teeth)(6.100"ID) 2012-Up	1	
319150AD	Pressure Plate, 845RE B Clutch (.212")(36 Teeth)(6.100"ID) 2012-Up	1	
319150AE	Pressure Plate, 845RE B Clutch (.220")(36 Teeth)(6.100"ID) 2012-Up	1	
319150AF	Pressure Plate, 845RE B Clutch (.228")(36 Teeth)(6.100"ID) 2012-Up	1	
319150AG	Pressure Plate, 845RE B Clutch (.236")(36 Teeth)(6.100"ID) 2012-Up	1	

PART #	OIL SEALING RINGS	QTY	REFERENCE #
319177AT	Sealing Ring, 845RE Input Shaft (Front)(.076" Thick)(1.230"OD)(Teflon) 2012-Up (Also Fits #179)	2-7	
319179A	Use 319177AT	2	
319180AT	Sealing Ring, 845RE Output Shaft (.103" Thick)(1.870"OD)(Teflon) 2012-Up	2	

PART #	WASHERS AND BEARINGS	QTY	REFERENCE #
319209A	Caged Needle Bearing, 845RE Stator (Rear)(1.530"OD) 2012-Up	1	
319214A	Bearing W/Races, 845RE C Clutch Hub To P4 Planet Sun Gear (.196" Thick)(1.744"OD) (1.087"ID) 2012-Up	1	
319222A	Race, 845RE Sun Gear To P3 Planet (.032"Thick)(2.600"OD)(1.973"ID) 2012-Up	1	
319223A	Bearing W/Race, 845RE Sun Gear To P3 Planet (.157" Thick)(2.653"OD)(2.008"ID) 2012-Up	1	
319232A	Bearing W/Race, 845RE Stator To A Clutch Hub (.157"Thick)(2.788"OD)(2.010"ID) 2012-Up (Also Fits #233)	1-2	
319233A	Use 319232A	1	
319234A	Race, 845RE A Clutch Hub (Rear)(.157" Thick)(2.788"OD)(2.082"ID) 2012-Up	1	
319235A	Bearing W/Races, 845RE E Clutch Hub To C Clutch Hub (.195"OD)(1.898"OD)(1.243"ID) 2012-Up	1	
319236A	Race, 845RE Ring Gear To P1 Planet (Front)(Cupped)(3.341"OD)(2.036"ID) 2012-Uo	1	
319237A	Bearing W/Race, 845RE Ring Gear To P1 Planet (Front)(Cupped Race)(2.947"OD)(2.008"ID) 2012-Up	1	
319238A	Bearing, 845RE Ring Gear To P1 Planet (Rear)(Cupped Race)(3.348"OD)(1.848"ID) 2012-Up	1	
319239A	Washer, 845RE Ring Gear To P1 Planet (Rear)(Plastic)(8 Tabs) 2012-Up	1	
319240A	Race, 845RE P2 Planet (Rear)(Cupped)(2.782"OD)(1.777"ID) 2012-Up	1	
319241A	Bearing W/Race, 845RE P2 Planet (Rear)(Cupped Race)(3.348"OD)(1.848"ID) 2012-Up	1	
319242A	Washer, 845RE P2 Planet (Rear)(Plastic)(6 Tabs) 2012-Up	1	
319250A	Race, 845RE P3 Planet To E Clutch Hub (Top Hat)(2.786"OD)(1.720"ID) 2012-Up	1	
319251A	Bearing W/Race, 845RE P3 Planet To E Clutch Hub (.157" Thick)(2.472"OD)(1.830"ID) 2012-Up	1	
319270A	Caged Needle Bearing, 845RE Case To Output Shaft (Cast # F-559282.05) 2012-Up	1	
319272A	Ball Bearing, 845RE (Rear)(Cast # NTN 6207X63) 2012-Up	1	
319287AA	Shim, 845RE Ball Bearing To Yoke (.038" Thick)(1.733"OD) 2012-Up	1	
319295A	Caged Needle Bearing, 845RE Front Cover (.475" Thick)(2.350"OD)(Cast # F-560471) 2012-Up	1	

PART #	GASKETS AND RUBBER COMPONENTS	QTY	REFERENCE #
319300AW	Gasket, 845RE Bottom Pan (Rubber) 2012-Up	1	
319311A	O-Ring, 845RE Pump (Rear Cover) 2012-Up	1	
319312A	O-Ring, 845RE Stator (Rear) To Case 2012-Up	1	
319313A	O-Ring, 845RE Pump (Front Cover) 2012-Up	1	
319315A	Seal, 845RE Pump (Rear Cover)(Teflon W/Bonded Rubber) 2012-Up	1	
319330A	O-Ring, 845RE C Clutch Inner Hub (Outer) 2012-Up	2	
319331A	Lip Seal, 845RE C Clutch Piston (Outer) 2012-Up	1	
319332-1A	O-Ring, 845RE E Clutch Hub (Rear)(Thin One) 2012-Up	1	
319332A	O-Ring, 845RE E Clutch Hub (Rear)(Thick One) 2012-Up	1	
319333A	Lip Seal, 845RE E Clutch Piston (Outer) 2012-Up	1	
319334A	Lip Seal, 845RE A Clutch Piston (Outer) 2012-Up	1	
319335A	Lip Seal, 845RE A Clutch Piston (Inner) 2012-Up	1	
319336A	O-Ring, 845RE D Clutch Piston (Inner) 2012-Up	1	
319337A	O-Ring, 845RE D Clutch Retainer/Piston (Outer) 2012-Up	1	
319338A	O-Ring, 845RE B Clutch Piston (Outer) 2012-Up	1	
319339A	Lip Seal, 845RE B Clutch Piston (Inner) 2012-Up	1	
319347-1A	O-Ring, 845RE Case Connector (With 3 Lips) 2012-Up	1	
319347A	O-Ring, 845RE Case Connector (Smooth) 2012-Up	1	
319356A	O-Ring, 845RE C Clutch Inner Hub To Input Shaft (Front) 2012-Up	1	
319357A	O-Ring, 845RE C Clutch Inner Hub To Input Shaft (Rear) 2012-Up	1	
319380A	O-Ring, 845RE Input Shaft (Front) 2012-Up	1	
319381A	O-Ring, 845RE Front Cover To Case 2012-Up	1	

© Whatever It Takes Transmission Parts. Inc.

PART #	TECHNICAL MANUALS	QTY	REFERENCE #
319400A	Tech Manual, ZF8HP45/55/70/90 (ATSG)	1	

PART #	ELECTRICAL COMPONENTS	QTY	REFERENCE #
319420A	Solenoid Assembly, 845RE (8 Solenoid) 2012-Up	1	
319444A	Connector, 845RE Case (Plastic) 2012-Up	1	
319446A	Wire Harness, 845RE Internal 2012-Up	1	
319457A	Solenoid, 845RE Park Hold (On Opposite End Of 8 Solenoids) 2012-Up	1	
319467A	H.I.S., 845RE (Hydraulic Impulse Oil Storage) Electric Pump (Cast # 0501 327 294) 2012-Up	1	

PART #	HARDPARTS	QTY	REFERENCE #
319500A	Pump, 845RE 2012-Up	1	
319510-1A	Front Cover, 845RE To Stator (Cast # 1090 410 061)(Aluminum) 2012-Up	1	
319520-1A	Stator, 845RE Aluminum W/Tube (Cast # 1090.410.057) 2012-Up	1	
319520A	Cover, 845RE Pump (Front)(Aluminum) 2012-Up	1	

PART #	PUMP COMPONENTS	QTY	REFERENCE #
319507-3A	Spring, 845RE Pump (Rear Cover)(Dished) 2012-Up	1	
319532A	Rotor, 845RE Pump (.590" Thick)(12 Vane) 2012-Up	1	
319533A	Vane, 845RE Pump (.591"Thick)(.284" Wide) 2012-Up	12	
319534A	Outer Slide, 845RE Pump (.591"Thick) 2012-Up	1	
319535A	Pin, 845RE Pump Outer Slide (1.082" Long)(.157"OD) 2012-Up	2	

PART #	HARDPARTS (Continued)	QTY	REFERENCE #
319525A	Chain, 845RE Pump Drive (32 Links) 2012-Up	1	
319526A	Sprocket, 845RE Pump Drive (34 Teeth)(With 53 Spline Hub) 2012-Up	1	
319527A	Sprocket, 845RE Pump Driven (31 Teeth)(With Pump Shaft) 2012-Up	1	
319528A	Cover, 845RE Pump (Rear)(Aluminum) 2012-Up	1	
319557A	Hub, 845RE D Clutch (Aluminum)(Cast #1090.473.020) 2012-Up	1	
319560A	Piston Kit, 845RE C Clutch 2012-Up	1	
319562A	Piston Kit, 845RE E Clutch 2012-Up	1	
319564A	Piston Kit, 845RE A Clutch 2012-Up	1	
319565A	Piston Kit, 845RE D Clutch 2012-Up	1	
319566A	PistonKit, 845RE B Clutch 2012-Up	1	
319570-1A	Hub, 845RE C Clutch (Inner)(Steel)(With 2 Inner & 2 Outer O-Rings) 2012-Up	1	
319570A	Hub, 845RE C Clutch Outer (Aluminum)(Cast # 1090 475 031) 2012-Up	1	
319574A	Hub, 845RE E Clutch (Aluminum)(Cast # 1090-471-017) 2012-Up	1	
319580A	Planet, 845RE P2 (3 Gear)(48 Teeth Sun Gear) 2012-Up	1	
319582A	Planet, 845RE P1 With Hub (4 Gear)(48 Teeth Sun Gear) 2012-Up	1	
319584A	Planet, 845RE P3 (3 Gear)(Aluminum)(60 Teeth Sun Gear) 2012-Up	1	
319586A	Planet, 845RE P4 With Output Shaft (4 Gear)(9 3/4" Overall Length)(Bolt On Yoke Type) 2012-Up	1	
319590A	Ring Gear, 845RE P2 Planet (24 Tabs) 2012-Up	1	
319592A	Ring Gear, 845RE P1 Planet With Hub (40 Teeth Clutch Hub) 2012-Up	1	
319594A	Ring Gear, 845RE P3 Planet (24 Tabs) 2012-Up	1	
319596A	Ring Gear, 845RE P4 Planet (105 Teeth)(60 Outer Splines)(.988" Thick) 2012-Up	1	
319612A	Sun Gear, 845RE P1/P2 Planet (48 Teeth/48 Teeth) 2012-Up	1	
319614A	Sun Gear, 845RE P3 Planet (With 24 Tab Hub)(60 Teeth) 2012-Up	1	
319616A	Sun Gear, 845RE P4 Planet With C & D Clutch Housing (28 Teeth) 2012-Up	1	
319626A	Output Shell, 845RE (Aluminum)(9 13/16" Long) 2012-Up	1	
319670A	Input Shaft, 845RE (20 1/2" Long)(32 Converter Splines) 2012-Up	1	
319674A	Hub, 845RE A Clutch (24 Clutch Splines)(.475" Wide)(1.310"ID) 2012-Up	1	
319697A	Housing, 845RE Output Shaft Ring (Rear) In Case (2.584"OD)(1.891"ID)(Tin) 2012-Up	1	
319740A	Valve Body, 845RE (9 Solenoids)(Cast# A048 On Plate) 2012-Up	1	

PART #	VALVE BODY PARTS	QTY	REFERENCE #
S319741A-6K	End Plug Kit, ZF8HP45 Valve Body (Contains: Eight 12mm Diameter Internal End Plugs, Three 13mm Diameter End Plugs & 27 O-Rings)(Sonnax)	1	
S319741PK	Valve Kit ZF8HP45 Pressure Regulator Valve (Oversized)(Contains Valve & Sleeve)(Sonnax) (Must Use T-F-35740-TL)	1	
T-F-35740-TL	Tool Kit For S319741PK (Contains Reamer, Jig & Guide Pin)(Sonnax)	1	
S319741A-ZK	Zip Kit, ZF8HP45/55/70 (Contains: Pressure Reg Sleeve, Priming Valve & Seal, Internal End Plugs & O-Rings, End Plugs & Orings, Accum Piston Kit, Solenoid O-Rings)	1	

© Whatever It Takes Transmission Parts. Inc.

PART #	HARDPARTS (Continued)	QTY	REFERENCE #
319760A	Case, 845RE (Dodge 3.6L)(Cast # 1090 401 356 On Bell Housing) 2012-Up	1	
319765A	Pan, 845RE Bottom (Plastic, With Filter)	1	
319777AK	Bolt Set, 845RE Front Cover To Stator (Aluminum)(3" Long)(13 Pieces) 2012-Up	1	
319778AK	Bolt Set, 845RE Stator (Rear)(1.138" Long)(6 Pieces) 2012-Up	1	
319779AK	Bolt Set, 845RE Bottom Pan To Case (13 Pieces) 2012-Up	1	
319798A	Nut, 845RE Output Shaft To Yoke (12 Point) 2012-Up	1	
319841A	Yoke, 845RE Output Shaft (4 Bolt)(3" Long) 2012-Up	1	
319860A	Snap Ring, 845RE Holds Caged Needle Bearing In Stator (Rear)(.059" Thick)(1.700"OD) 2012	1	
319862A	Snap Ring, 845RE Holds C Clutch Piston In (.097" Thick)(1.780"OD) 2012-Up	1	
319868A	Snap Ring, 845RE Holds Sun Gear To Ring Gear (.098" Thick)(5.778"OD) 2012-Up	1	
319874A	Snap Ring, 845RE Holds E Clutch Piston To Hub (.117" Thick)(1.826"OD) 2012-Up	1	
319876AA	Snap Ring, 845RE Holds A Clutch Pressure Plate In (.086" Thick)(5.638"OD) 2012-Up	1	
319876AB	Snap Ring, 845RE Holds A Clutch Pressure Plate In (.094" Thick)(5.638"OD) 2012-Up	1	
319876AC	Snap Ring, 845RE Holds A Clutch Pressure Plate In (.102" Thick)(5.638"OD) 2012-Up	1	
319876AD	Snap Ring, 845RE Holds A Clutch Pressure Plate In (.110" Thick)(5.638"OD) 2012-Up	1	
319876AE	Snap Ring, 845RE Holds A Clutch Pressure Plate In (.118" Thick)(5.638"OD) 2012-Up	1	
319876AF	Snap Ring, 845RE Holds A Clutch Pressure Plate In (.125" Thick)(5.638"OD) 2012-Up	1	
319877A	Retainer, 845RE A Clutch Piston Spring (Horse Shoe) 2012-Up	1	
319878AA	Snap Ring, 845RE Holds D Clutch Pressure Plate In (.062" Thick)(6 3/8"OD) 2012-Up	1	
319878AB	Snap Ring, 845RE Holds D Clutch Pressure Plate In (.070" Thick)(6 3/8"OD) 2012-Up	1	
319878AC	Snap Ring, 845RE Holds D Clutch Pressure Plate In (.078" Thick)(6 3/8"OD) 2012-Up	1	
319878AD	Snap Ring, 845RE Holds D Clutch Pressure Plate In (.086" Thick)(6 3/8"OD) 2012-Up	1	
319878AE	Snap Ring, 845RE Holds D Clutch Pressure Plate In (.094" Thick)(6 3/8"OD) 2012-Up	1	
319878AF	Snap Ring, 845RE Holds D Clutch Pressure Plate In (.102" Thick)(6 3/8"OD) 2012-Up	1	
319878AG	Snap Ring, 845RE Holds D Clutch Pressure Plate In (.110" Thick)(6 3/8"OD) 2012-Up	1	
319878AH	Snap Ring, 845RE Holds D Clutch Pressure Plate In (.118" Thick)(6 3/8"OD) 2012-Up	1	
319879A	Snap Ring, 845RE Holds P4 Ring Gear To Output Shell (.056" Thick)(5 5/16"OD) 2012-Up	1	
319880A	Snap Ring, 845RE Holds Input Shaft To P2 Planet (.077" Thick)(1.733"OD) 2012-Up	1	
319888A	Snap Ring, 845RE Holds P3 Planet To D Clutch Hub (.078"Thick)(6 3/8"OD) 2012-Up	1	
319889A	Snap Ring, 845RE Holds Ring Gear To E/C Clutch Drum (.078"Thick)(5.990"OD) 2012-Up	2	
319890A	Snap Ring, 845RE Holds Caged Needle Bearing To Case (.055" Thick)(2.800"OD) 2012-Up	1	
319891A	Snap Ring, 845RE Holds Output Ring Housing In Case (.076"Thick)(2.605"OD) 2012-Up	1	
319892A	Snap Ring, 845RE Holds B Clutch Pressure Plate In (.077" Thick)(7"OD) 2012-Up	1	
319893A	Snap Ring, 845RE Holds Ball Bearing To Case (.115" Thick)(3.052"OD) 2012-Up	1	
319896A	Snap Ring, 845RE Holds Rotor To Pump Shaft (.032" Thick)(.362"OD) 2012-Up	1	
319897A	Snap Ring, 845RE Holds Rear Pump Cover To Pump Shaft (.032" Thick)(.316"OD) 2012-Up	1	
319898A	Snap Ring, 845RE Holds Caged Needle Bearing To Front Cover (.056" Thick)(2.485"OD) 2012-Up	1	
319899A	Snap Ring, 845RE Holds Dished Spring To Rear Cover (.039" Thick)(2.360"OD) 2012-Up	1	
319956A	Housing, 845RE B Clutch Piston (Bonded)(1.130" Thick)(7 1/2"OD) 2012-Up	1	
319960A	Piston, 845RE C Clutch (Aluminum)(Cast # 1090 475 027) 2012-Up	1	
319960AKHP	Piston Kit, 845RE/ZF8HP45/45X 2011-Up (Hi-Per Blue)(4 Pistons)	1	
319962A	Piston, 845RE E Clutch (Aluminum)(Cast # 1090 471 011) 2012-Up	1	
319964A	Piston, 845RE A Clutch (Aluminum)(Cast # 1090 470 006) 2012-Up	1	
319965A	Piston, 845RE D Clutch (Steel)(5.675"OD)(2.088"ID) 2012-Up	1	
319966A	Piston, 845RE B Clutch (Aluminum)(Cast # 1090 472 033) 2012-Up	1	
319970A	Spring, 845RE C Clutch Piston Return (.064" Thick)(3.951"OD)(Dished) 2012-Up	1	
319972A	Spring, 845RE E Clutch Piston Return (.064"Thick)(3.963"OD)(Dished) 2012-Up	1	
319974A	Spring, 845RE A Clutch Piston Return (4 5/8"OD) 2012-Up	1	
319975A	Spring, 845RE D Clutch Return (.063" Thick)(4.145"OD)(Dished) 2012-Up	1	
319980A	Retainer/Piston, 845RE C Clutch (Bonded) 2012-Up	1	
319982A	Retainer/Piston, 845RE E Clutch (Bonded) 2012-Up	1	
319985A	Retainer/Piston, 845RE D Clutch Spring (Steel)(4.207"OD) 2012-Up	1	
319991A	Linkage, 845RE Internal (5 Pieces) 2012-Up	1	
319995A	Park Pawl Assembly, 845RE Internal (5 Pieces) 2012-Up	1	

© Whatever It Takes Transmission Parts. Inc.

002 Overhaul Kit

004 Master L/Steels Kit

006 Master W/Steels Kit

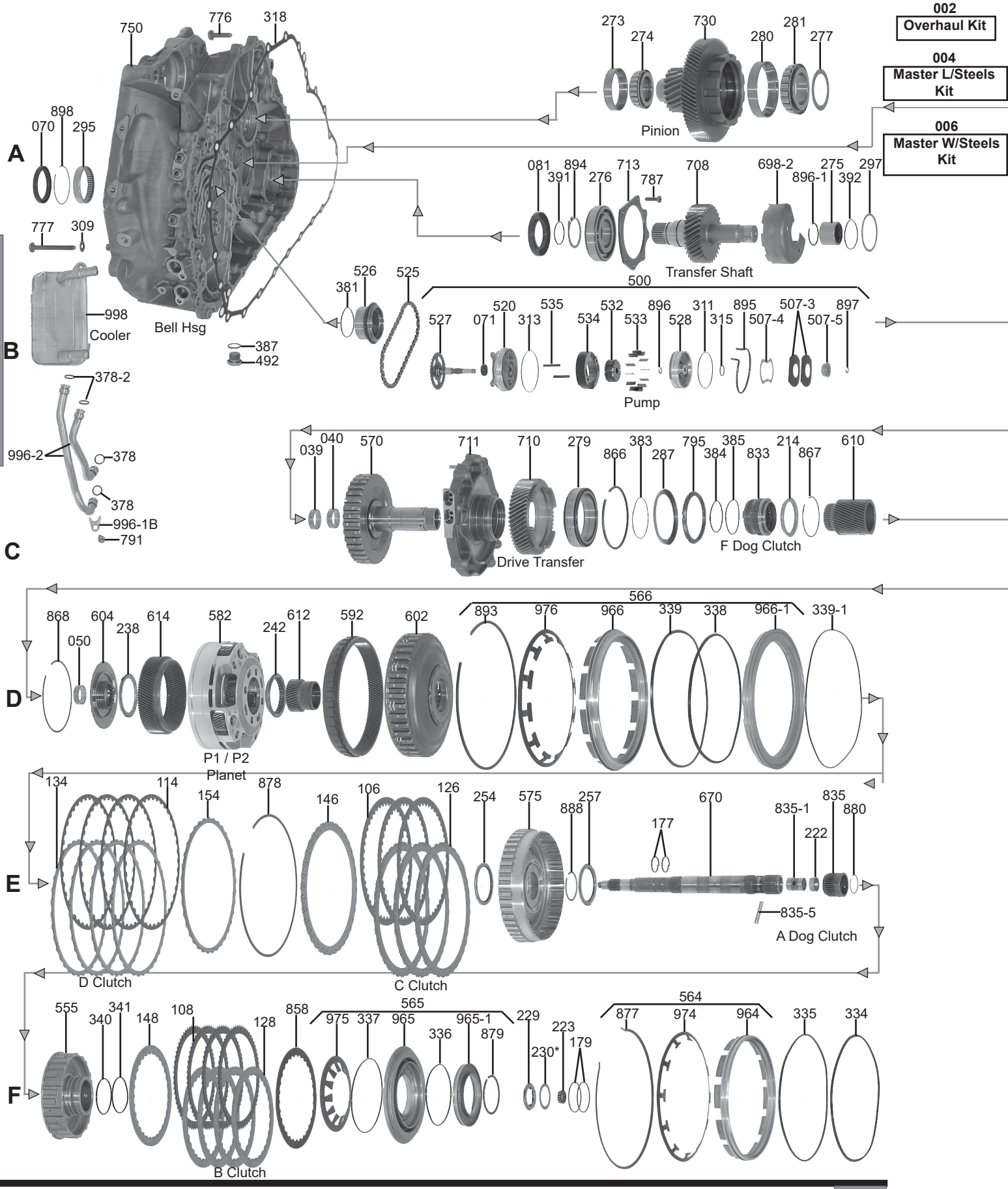

© Whatever It Takes Transmission Parts. Inc.

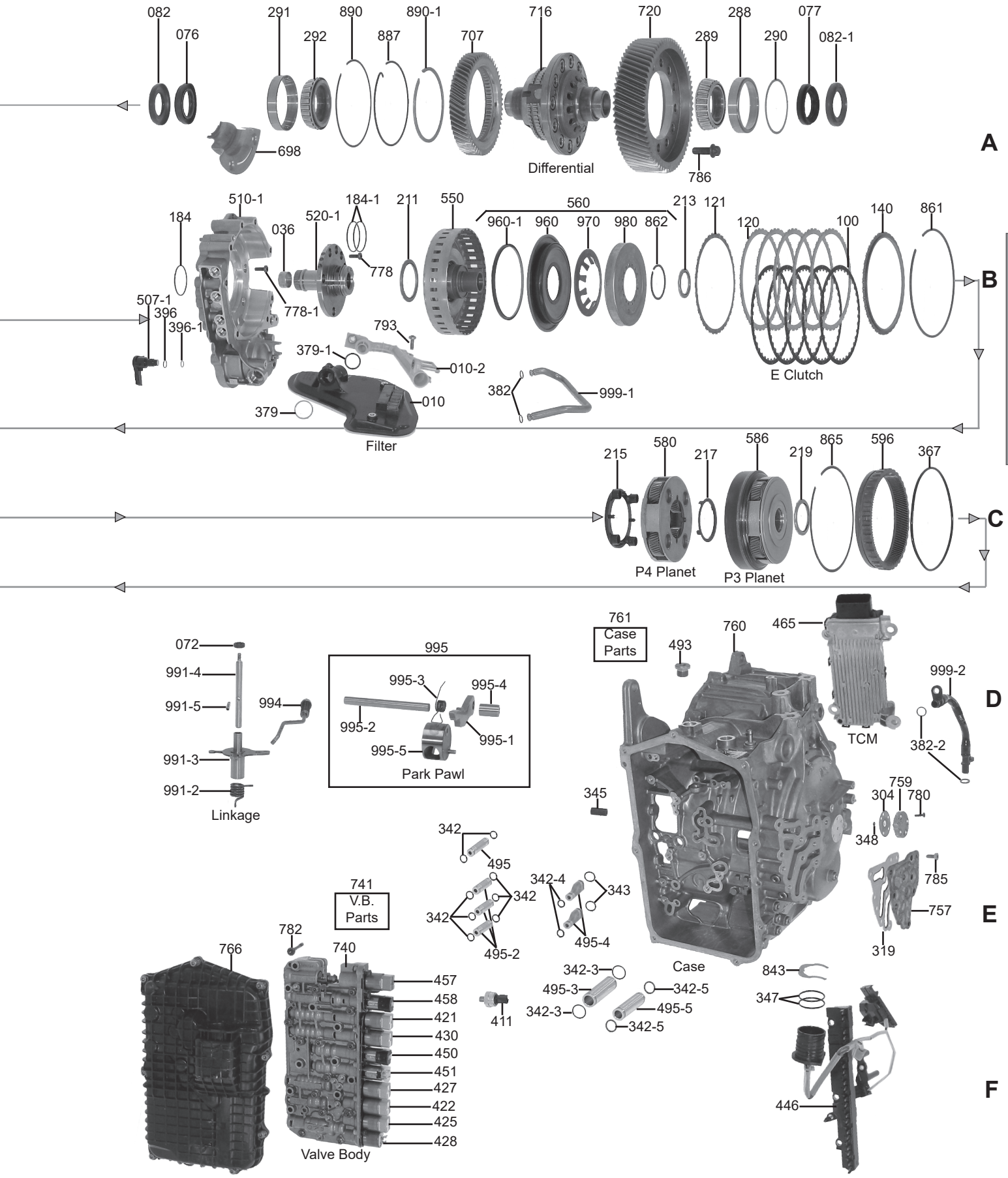

© Whatever It Takes Transmission Parts. Inc.

PART #	OVERHAUL KIT	QTY	REFERENCE #
339002B	Overhaul Kit, ZF9HP48 2013-Up	1	
339002APW	Overhaul Kit, ZF9HP48 (9 Speed) 2011-Up (W/Pistons)(W/Molded Rubber Valve Body Gasket)	1	

PART #	MASTER L/STEELS KIT	QTY	REFERENCE #
339004B	Master L/Steels Kit, ZF9HP48 2013-Up	1	

PART #	MASTER W/STEELS KIT	QTY	REFERENCE #
339006B	Master W/Steels Kit, ZF9HP48 2013-Up	1	

PART #	FILTERS	QTY	REFERENCE #
339010B	Filter, ZF9HP48 (948TE) (Plastic)(Long Oval Pick-Up) 2013-Up	1	
339010-2B	Outlet Tube, ZF9HP48 Filter To Oil Pump Housing (4 Bolt)(Plastic) 2013-Up	1	

PART #	BUSHINGS	QTY	REFERENCE #
339030A	Bushing Kit, ZF9HP48 (948TE) 2013-Up (Contains 4 Bushings)	1	
339036B	Bushing, ZF9HP48 Stator (Front)(.500"Wide)(.950"OD)(.830"ID) 2013-Up	1	
339039B	Bushing, ZF9HP48 E Clutch Hub (Front)(1.246"OD)(1.103"ID) 2013-Up	1	
339040B	Bushing, ZF9HP48 E Clutch Hub (Rear)(1.246"OD)(1.111"ID) 2013-Up	1	
339050B	Bushing, ZF9HP48 P2 Planet Ring Gear Hub (.300"Wide)(1.155"OD)(1.117"ID) 2013-Up	1	

PART #	METAL CLAD SEALS	QTY	REFERENCE #
339070B	Seal, ZF9HP48 Front (.275"Thick)(2.370"OD)(1.760"ID) 2013-Up	1	
339072B	Seal, ZF9HP48 Linkage (.193"Thick)(.720"OD)(.367"ID) 2013-Up	1	
339076B	Seal, ZF9HP48 Axle (Bell Houisng Side)(Inner)(2.650"OD)(1.675"ID) 2013-Up (Also Fits ZF9HP48 Axle(Case Side)(Inner)(# 077) 2013-Up)	1-2	
339077B	Use 339076B	1	
339081B	Seal, ZF9HP48 AWD Adapter (Inner)(2.840"OD)(1.705"ID) 2013-Up	1	
339082-1B	Seal, ZF9HP48 Axle (Case Side)(Outer)(2.795"OD)(1.710"ID) 2013-Up	1	
339082B	Seal, ZF9HP48 Axle (Bell Housing Side)(Outer)(2.685"OD)(1.470"ID) 2013-Up	1	

PART #	FRICTIONS	QTY	REFERENCE #
339100B	Friction, ZF9HP48 E Clutch (.073")(36 Teeth)(6 3/8"OD) 2013-Up	5	
339106B	Friction, ZF9HP48 C Clutch (.091")(48 Teeth)(8 3/16"OD) 2013-Up	3	
339108B	Friction, ZF9HP48 B Clutch (.090")(64 Teeth Outer)(5.521"ID) 2013-Up	4	
339114B	Friction, ZF9HP48 D Clutch (.075")(40 Teeth)(8 1/2"OD) 2013-Up	4	

PART #	STEELS	QTY	REFERENCE #
339120B	Steel, ZF9HP48 E Clutch (.083")(36 Teeth)(5.795"ID) 2013-Up	5	
339121B	Steel, ZF9HP48 E Clutch (.020")(36 Teeth)(5.805"ID)(Waved) 2013-Up	1	
339126B	Steel, ZF9HP48 C Clutch (.119")(30 Teeth Dipped & 3 Wide Teeth)(7 5/15"ID) 2013-Up	3	
339128B	Steel, ZF9HP48 B Clutch (.119")(30 Teeth On ID)(6 7/16"OD) 2013-Up	4	
339134B	Steel, ZF9HP48 D Clutch (.117")(36 Teeth)(8"ID) 2013-Up	4	

PART #	PRESSURE PLATES	QTY	REFERENCE #
339140B	Pressure Plate, ZF9HP48 E Clutch (.149")(36 Teeth)(5.790"ID) 2013-Up	1	
339146B	Pressure Plate, ZF9HP48 C Clutch (.197")(36 Teeth)(7 1/16"ID) 2013-Up	1	
339148B	Pressure Plate, ZF9HP48 B Clutch (.131")(30 Teeth On ID)(6 7/16"OD) 2013-Up	1	
339154B	Pressure Plate, ZF9HP48 D Clutch (.131")(36 Teeth)(8"ID) 2013-Up	1	

PART #	BEARING & RACES	QTY	REFERENCE #
339213B	Bearing W/Races, ZF9HP48 "E" Clutch Drum To Hub (.141"Thick)(1.858"OD)(1.325"ID) 2013-Up	1	
339214B	Washer, ZF9HP48 Support To "F" Dog Clutch Sun Gear (.195"Thick)(2.480"OD)(1.962"ID) (Stepped) 2013-Up	1	
339215B	Washer/Oil Slinger, ZF9HP48 Support To P4 Planet (Black Plastic)(2.805"ID) 2013-Up	1	
339217B	Washer, ZF9HP48 P4 Planet To P3 Planet (.155"Thick)(2.790"OD)(2.343"ID)(4 Tab)(Black Plastic) 2013-Up	1	
339219B	Bearing W/Races, ZF9HP48 P3 Planet To P1 Ring Gear Hub (.148"Thick)(2.312"OD)(1.720"ID) 2013-Up	1	

© Whatever It Takes Transmission Parts. Inc.

339223B ..... Caged Needle Bearing, ZF9HP48 Input Shaft To Rear Ring Tower (.263”Thick)(.785”OD)(Split) (18 Needles) 2013-Up 1
339229B ..... Bearing W/Races, ZF9HP48 “B” Clutch Drum To Case (.142”Thick)(1.735”OD)(.987”ID) 2013-Up 1
339230A ..... Shim, ZF9HP48 “B” Clutch Drum To Case (Selective) 2013-Up 1
339238B ..... Bearing W/Races, ZF9HP48 P1 Ring Gear Hub To P1/P2 Planet (.142”Thick)(2.765”OD) (2.135”ID) 2013-Up 1
339242B ..... Dual Top Hat Bearing, ZF9HP48 P1/P2 Planet To Hub # 602 (.380”Thick)(2.820”OD) (Dual Set Of Needles) 2013-Up 1
339254B ..... Bearing W/Races, ZF9HP48 Hub # 604 To “C” Clutch Hub (.142”Thick)(2.707”OD)(2.132”ID) 2013-Up 1
339257B ..... Bearing W/Races, ZF9HP48 “C” Clutch Hub To “B” Clutch Drum (.143”Thick)(2.715”OD) (2.000”ID) 2013-Up 1
339273B ..... Cup Race, ZF9HP48 Pinion To Bell Housing (.570”Thick)(2.677”OD)(Cast # F581319.TR1) 2013-Up 1
339274B ..... Cone Bearing, ZF9HP48 Pinion To Bell Housing (22 Rollers)(1.575”ID)(Cast # F-581319.TR1) 2013-Up 1
339275B ..... Caged Needle Bearing, ZF9HP48 Transfer Shaft To Case (Cast # HK 2816 INA)(1.375”OD) 2013-Up 1
339276B ..... Ball Bearing, ZF9HP48 Transfer Shaft To Bell Housing (.785”Thick)(3.545”OD)(1.772”ID) (Cast # F-589874) 2013-Up 1
339277B ..... Shim, ZF9HP48 Pinion To Case (.044”Thick)(2.638”OD)(1.985”ID) 2013-Up 1
339279B ..... Ball Bearing, ZF9HP48 Support To Drive Transfer Gear (.905”Thick)(3.780”OD)(2.915”ID) (Cast # 0501 323 939) 2013-Up 1
339280B ..... Cup Race, ZF9HP48 Pinion To Case (.670”Thick)(3.545”OD)(Cast # F-577855.01.TR1) 2013-Up 1
339281B ..... Cone Bearing, ZF9HP48 Pinion To Case (20 Rollers)(1.970”ID)(Cast # F-577855.01.TR1) 2013-Up 1
339287B ..... Washer/Retainer, ZF9HP48 Under Nut # 795 (.220”Thick)(3.490”OD)(2.850”ID)(1 Tab) 2013-Up 1
339288B ..... Use U339291B 1
339289B ..... Use U339292B 1
339290B ..... Shim, ZF9HP48 Differential Bearing To Case (.058”Thick)(3.522”OD)(3.170”ID) 2013-Up 1
339291B ..... Cup Race, ZF9HP48 Differential To Bell Housing (.685”Thick)(3.545”OD) (Cast # F574896.02 TR1) 2013-Up (Also Fits ZF9HP48 Differential To Case # 288 2013-Up) ... 1-2
339292B ..... Cone Bearing, ZF9HP48 Differential To Bell Housing (25 Rollers)(2.165”ID) (Cast # F574896.02.TR1) 2013-Up (Also Fits ZF9HP48 Differential To Case # 289 2013-Up) ... 1-2
339295B ..... Caged Needle Bearing, ZF9HP48 Convertor To Bell Housing (.465”Thick)(2.365”OD) (Cast # F-560471) 2013-Up 1
339297B ..... Shim, ZF9HP48 Pump Drive Gear To Stator (.054”Thick)(2.440”OD)(2.112”ID) 2013-Up 1

PART #	GASKETS AND SEALING RINGS	QTY	REFERENCE #

339318B ..... Gasket, ZF9HP48 Bell Housing To Case (Metal) 2013-Up 1
339319B ..... Gasket, ZF9HP48 Hydraulic Cover Plate To Case (Bonded Metal) 2013-Up 1

PART #	ELECTRICAL COMPONENTS	QTY	REFERENCE

339411B ..... Switch, ZF9HP48 Pressure Transducer (Black Connector) 2013-Up 1
339421B ..... Solenoid, ZF9HP48 C Clutch (Orange Connector) 2013-Up (Also Fits ZF9HP48 D Clutch # 430, E Clutch # 427, B Clutch # 422, TCC # 425, & Pressure # 428 2013-Up) 1-6
339422B ..... Use 339421B 1
339425B ..... Use 339421B 1
339427B ..... Use 339421B 1
339428B ..... Use 339421B 1
339430B ..... Use 339421B 1
339446B ..... Wire Harness, ZF9HP48 Internal (26 Pin Connector)(W/Speed Sensors & TRS) 2013-Up 1
339450B ..... Use 339458B 1
339451B ..... Use 339458B 1
339457B ..... Solenoid, ZF9HP48 Mechanical Park (Tan Connector) 2013-Up 1
339458B ..... Solenoid, ZF9HP48 Park Control (Black & White Connector) 2013-Up (Also Fits ZF9HP48 F Dog Clutch # 430, & A Dog Clutch # 451) 1-3
339465B ..... ECM, ZF9HP48 (58 Blade Connector)(Cast # 609-20969 0501 220945) 2013-Up 1

PART #	MISCELLANEOUS COMPONENTS	QTY	REFERENCE #

339492B ..... Drain Plug, ZF9HP48 On Bottom Of Bell Housing (8mm Allen) 2013-Up 1
339495-2B ..... Oil Tube, ZF9HP48 Valve Body To Pump Housing (Aluminum)(1.630”Long)(2nd, 3rd, 4th Ones Down) 2013-Up 3
339495-3B ..... Oil Tube, ZF9HP48 Valve Body To Pump Housing (Aluminum)(2.985”Long)(.906”OD) 2013-Up 1

© Whatever It Takes Transmission Parts. Inc.

PART #	MISCELLANEOUS COMPONENTS (Continued)	QTY	REFERENCE #
339495-4B	Oil Tube, ZF9HP48 Valve Body To Drive Transfer Gear Support (1.752"Long)(Round On One End & Oval On One End) 2013-Up	2	
339495-5B	Oil Tube, ZF9HP48 Valve Body To Filter (Aluminum)(2.828"Long)(.783"OD) 2013-Up	1	
339495B	Oil Tube, ZF9HP48 Valve Body To Pump Housing (Aluminum)(2.030"Long)(Top One) 2013-Up	1	

PART #	HARDPARTS	QTY	REFERENCE #
339500B	Pump Assy, ZF9HP48 2013-Up	1	
339507-1B	Diverter, ZF9HP48 Pump Bleed Off (Plastic)(Elbow) 2013-Up	1	
339510-1B	Pump Housing, ZF9HP48 (Aluminum)(9 Bolts to Bell)(Cast # 1094-410-043) 2013-Up	1	
339520-1B	Stator, ZF9HP48 (Steel)(3 3/8" Tall)(Cast # 1094.210.060A) 2013-Up	1	
339525B	Chain, ZF9HP49 Pump Drive (36 Links) 2013-Up	1	
339526B	Sprocket, ZF9HP48 Pump Drive (34 Teeth W/4 ID Flats For Convertor) 2013-Up	1	
339550B	Drum, ZF9HP48 E Clutch (5 Clutch)(36 Teeth Steels) 2013-Up	1	
339555B	Drum, ZF9HP48 B Clutch (Aluminum W/Steel Sleeve)(2.032"Tall) 2013-Up	1	
339560B	Piston Kit, ZF9HP48 E Clutch (Bonded Piston) 2013-Up	1	
339564B	Piston Kit, ZF9HP48 C Clutch (Aluminum Piston) 2013-Up	1	
339565B	Piston Kit, ZF9HP48 B Clutch (Aluminum Pistons) 2013-Up	1	
339566B	Piston Kit, ZF9HP48 D Clutch (Aluminum Pistons) 2013-Up	1	
339570B	Clutch Hub, ZF9HP48 E Clutch W/Shaft (36 Clutch Teeth)(5.107"Tall) 2013-Up	1	
339575B	Clutch Hub, ZF9HP48 C Clutch (Outer) B Clutch (Inner)(Aluminum)(1.550"Thick) 2013-Up	1	
339580B	Planet, ZF9HP48 P4 (4 Gear Steel)(Uses 42 Teeth Sun Gear) 2013-Up	1	
339582B	Planet, ZF9HP48 P1/P2 (Aluminum Housing)(Uses A 42 Teeth Sun Gear # 612) 2013-Up	1	
339586B	Planet, ZF9HP48 P3 (4 Gear Steel)(Uses 42 Teeth Sun Gear) (W/110 Teeth P4 Planet Ring Gear) 2013-Up	1	
339592B	Ring Gear, ZF9HP48 P2 Planet (138 Teeth)(40 Outer Lugs)(7 11/16"OD) 2013-Up	1	
339596B	Ring Gear, ZF9HP48 P3 Planet (110 Teeth)(36 Outer Lugs)(6 3/8"OD) 2013-Up	1	
339602B	Hub, ZF9HP48 P2 Planet Ring Gear (40 D Clutch Splines)(This Hub Is Crimped To The P2 Ring Gear) 2013-Up	1	
339604B	Hub, ZF9HP48 P1 Planet Ring Gear (86 Outer Teeth)(4.265"OD)(With Inner A Dog Splines) 2013-Up	1	
339610B	Sun Gear, ZF9HP48 P3/P4 Planet With F Dog Clutch Splines (42 Teeth) 2013-Up	1	
339612B	Sun Gear, ZF9HP48 P1 Planet (42 Teeth)(1.680" Long) 2013-Up	1	
339614B	Sun Gear, ZF9HP48 P2 Planet (94 Teeth Outer)(W/86 Teeth Inner, P1 Planet Ring Gear) 2013-Up	1	
339670B	Input Shaft, ZF9HP48 (12 7/8" Long) 2013-Up	1	
339689-2B	Oil Guide, ZF9HP48 Transfer Shaft (2 Bolts To Case) 2013-Up	1	
339698B	Oil Guide, ZF9HP48 Differential (2 Bolts To Bell) 2013-Up	1	
339707B	Ring Gear, ZF9HP48 AWD Drive Transfer (69 Teeth)(12 Holes) 2013-Up	1	
339708B	Transfer Shaft, ZF9HP48 (32 Teeth)(3.725"OD)(6 7/8"Long) 2013-Up	1	
339710B	Gear, ZF9HP48 Dirve Transfer (55 Teeth)(1.490"Thick)(With Four 9 Spline Lugs) 2013-Up	1	
339711B	Support, ZF9HP48 Drive Transfer Gear (Cast # 1094 477 061) 2013-Up	1	
339713B	Retainer Plate, ZF9HP48 Holds Transfer Shaft Bearing To Bell Housing (7 Bolt)(.160" Thick) 2013-Up	1	
339716B	Differential Housing, ZF9HP48 AWD (12 Bolt Ring Gear)(25 Roller Bearing On Both Ends) 2013-Up	1	
339720B	Ring Gear, ZF9HP48 Differential (69 Teeth)(12 Bolt)(1.985"Thick) 2013-Up	1	
339730B	Pinion, ZF9HP48 (22 Teeth)(76 Teeth Driven Transfer Gear)(12 Park Lugs) 2013-Up	1	
339740B	Valve Body, ZF9HP48 (10 Solenoid)(Cast # 1094 427 079 On Transmission Side & 1094 427 080 On Pan Side) 2013-Up	1	
339750B	Bell Housing, ZF9HP49 AWD (Starter At 12:00)(Cast # 1094 422 175) 2013-Up	1	
339757B	Hydraulic Cover Plate, ZF9HP48 (Aluminum)(Cast # 1094 401 123) (11 Bolt) 2013-Up	1	
339759B	Rear Cover, ZF9HP48 To Case (Aluminum)(1.670"OD)(4 Bolt Holes) 2013-Up	1	
339760B	Case, ZF9HP48 AWD (ZF9HP48 On Metal Tag)(Cast # 1094 401 133) 2013-Up	1	
339766B	Side Pan, ZF9HP48 (Plastic) (W/8 Bolts Attached)(Cast # 276.100.008.951) 2013-Up	1	
339776BK	Bolt Set, ZF9HP48 Bell Housing To Case (25 Pieces) 2013-Up	1	
339777BK	Bolt Set, ZF9HP48 Bell Housing To Pump Housing (9 Pieces) 2013-Up	1	
339778-1BK	Bolt Set, ZF9HP48 Pump Housing To Bell Housing (6 Pieces) 2013-Up	1	
339778BK	Bolt Set, ZF9HP48 Stator To Pump Housing (7 Pieces) 2013-Up	1	
339780BK	Bolt Set, ZF9HP48 Rear Cover To Case (4 Pieces) 2013-Up	1	
339782BK	Bolt Set, ZF9HP48 Valve Body To Case (10 Pieces) 2013-Up	1	
339785BK	Bolt Set, ZF9HP48 Hydraulic Cover Plate To Case (11 Pieces) 2013-Up	1	
339786BK	Bolt Set, ZF9HP48 Differential Ring Gear To Differential Housing (12 Pieces) 2013-Up	1	
339787BK	Bolt Set, ZF9HP48 Transfer Shaft Plate To Bell Housing (7 Pieces) 2013-Up	1	
339791BK	Bolt Set, ZF9HP48 Cooler & Lines To Bell Housing (9 Pieces) 2013-Up	1	
339793BK	Bolt Set, ZF9HP48 Filter Pick Up Tube To Filter (3 Pieces) 2013-Up	1	
339795B	Nut, ZF9HP48 Holds Driven "F" Dog Clutch To Support 2013-Up	1	

© Whatever It Takes Transmission Parts. Inc.

339833B ..... Dog Clutch, ZF9HP48 “F” Dog (1.400” Wide)(2.378”OD)(With Inner Long & Short Dog Splines) (Uses Inner And Outer O-Ring) 2013-Up 1
339835-1B ..... Piston, ZF9HP48 A Dog Gear (.825”OD)(1.077”Long) 2013-Up 1
339835-5B ..... Pin, ZF9HP48 A Dog Gear To Piston (.255”OD)(1.480”Long) 2013-Up 1
339835B ..... Gear, ZF9HP48 A Dog (1.200”Long)(2 Holes For Pin # 835-5) 2013-Up 1
339843B ..... Clip, ZF9HP48 Holds Connector To Side Pan (2.168”Wide) 2013-Up 1
339858B ..... Cushion, ZF9HP48 B Clutch (.044”)(30 Teeth On ID)(6 3/8”OD) 2013-Up 1
339861B ..... Snap Ring, ZF9HP48 Holds E Clutch Pressure Plate In (.109”Thick)(6 15/16”OD) 2013-Up 1
339862B ..... Snap Ring, ZF9HP48 Holds E Clutch Spring Retainer In (.068”Thick)(2.260”OD) 2013-Up 1
339865B ..... Snap Ring, ZF9HP48 Holds P3 Ring Gear To P1/P2 Planet (.056”Thick)(6 11/16”OD) 2013-Up 1
339866B ..... Snap Ring, ZF9HP48 Holds Ball Bearing To Drive Transfer Gear (.118”Thick)(4.025”OD) 2013-Up 1
339867B ..... Snap Ring, ZF9HP48 Holds “A” Dog Clutch In Support (.057”Thick)(2.600”OD) 2013-Up 1
339868B ..... Snap Ring, ZF9HP48 Holds Hub To P1 Planet Ring Gear (.057”Thick)(4.580”OD) 2013-Up 1
339877B ..... Snap Ring, ZF9HP48 Holds “C” Clutch Return Spring In (.119”Thick)(9”OD) 2013-Up 1
339878B ..... Snap Ring, ZF9HP48 Holds “C” Clutch Pressure Plate In Case (.069”Thick)(9 1/4”OD) 2013-Up 1
339879B ..... Snap Ring, ZF9HP48 Holds “B” Clutch Piston In (.077”Thick)(2.508”OD) 2013-Up 1
339880B ..... Snap Ring, ZF9HP48 Holds “A” Dog Clutch To Input Shaft (.045”Thick)(1.255”OD) 2013-Up 1
339887B ..... Snap Ring, ZF9HP48 Holds Ring Gear # 707 To Differential (.077”Thick)(5.410”OD) 2013-Up 1
339888B ..... Snap Ring, ZF9HP48 Holds P1 Sun Gear To “C” Clutch Hub (.069”Thick)(1.880”OD) 2013-Up 1
339890-1B ..... Snap Ring, ZF9HP48 Holds Ring Gear # 707 To Differential (.117”Thick)(4.797”OD) 2013-Up 1
339890B ..... Snap Ring, ZF9HP48 Holds Ring Gear # 707 To Differential (.077”Thick)(5.610”OD) 2013-Up 1
339893B ..... Snap Ring, ZF9HP48 Holds “D” Clutch Piston In Case (.116”Thick)(9 1/2”OD) 2013-Up 1
339894B ..... Snap Ring, ZF9HP48 Holds Bearing # 276 On Transfer Shaft (.087”Thick)(1.920”OD) 2013-Up 1
339895B ..... Snap Ring, ZF9HP48 Holds Pump In Pump Housing # 510-1 (.127”Thick)(2.917”OD) (2 Bent Ends) 2013-Up 1
339896-1B ..... Snap Ring, ZF9HP48 Holds Bearing # 275 In Case (.090”Thick)(1.465”OD) 2013-Up 1
339896B ..... Use U319896A 1
319896A ..... Snap Ring, ZF9HP48 Holds Rotor To Pump Shaft (.032”Thick)(.362”OD) 2013-Up 1
339897B ..... C-Clip, ZF9HP48 Holds Pump Shaft # 527 To Pump 2013-Up 1
339898B ..... Snap Ring, ZF9HP48 Holds Bearing # 295 In Bell Housing (.057”Thick)(2.480”OD) 2013-Up 1
339960-1B ..... Piston, ZF9HP48 E Clutch (Bonded) (.310”Thick)(5.665”OD)(4.840”ID)(Presses Onto The E Clutch Drum) 2013-Up 1
339960B ..... Piston, ZF9HP48 E Clutch (Bonded)(.782”Thick)(6.210”OD)(2.215”ID) 2013-Up 1
339964B ..... Piston, ZF9HP48 C Clutch (Aluminum)(.923”Thick)(7 15/16”OD)(7 1/8”ID)(12 Castles) 2013-Up 1
339965-1B ..... Piston, ZF9HP48 B Clutch (Aluminum)(Inner)(.575”Thick)(3.965”OD)(2.436”ID) 2013-Up 1
339965B ..... Piston, ZF9HP48 B Clutch (Aluminum)(Outer)(.813”Thick)(6.185”OD)(2.470”ID) 2013-Up 1
339966-1B ..... Piston, ZF9HP48 D Clutch (Aluminum)(Rear)(.661”Thick)(9”OD)(7 7/16”ID) 2013-Up 1
339966B ..... Piston, ZF9HP48 D Clutch (Aluminum)(Front)(1.220”Thick)(8 7/8”OD)(7 1/4”ID)(12 Castles) 2013-Up 1
339970B ..... Spring, ZF9HP48 E Clutch Return (4.315”OD)(10 Fingers)(Dished) 2013-Up 1
339974B ..... Spring, ZF9HP48 D Clutch Return (.069”Thick)(8 1/4”OD)(12 Fingers)(Dished) 2013-Up 1
339975B ..... Spring, ZF9HP48 B Clutch Return (.065”Thick)(4.825”OD)(12 Fingers)(Dished) 2013-Up 1
339976B ..... Spring, ZF9HP48 D Clutch Return (.088”Thick)(8 7/8”OD)(12 Fingers)(Dished) 2013-Up 1
339980B ..... Retainer, ZF9HP48 E Clutch Spring (.635”Thick)(5.280”OD) 2013-Up 1
339991-2B ..... Spring, ZF9HP48 Rooster Comb Linkage (Coil) 2013-Up 1
339991-3B ..... Rooster Comb, ZF9HP48 Linkage (No Detents) 2013-Up 1
339991-4B ..... Manual Shaft, ZF9HP48 (4.600” Long)(.392”OD) 2013-Up 1
339994B ..... Park Actuator, ZF9HP48 (7 3/4” Long) 2013-Up 1
339995B ..... Park Pawl Assembly, ZF9HP48 (5 Pieces) 2013-Up 1
339996-1BK ..... Bracket Set, ZF9HP48 Holds Cooler Lines (4 Pieces) 2013-Up 1
339996-2BK ..... Tube Set, ZF9HP48 Cooler To Bell Housing (2 Pieces) 2013-Up 1
339998B ..... Cooler, ZF9HP48 External (3 Bolt To Bell Housing)(Aluminum) 2013-Up 1
339999-1B ..... Oil Tube, ZF9HP48 Pump Housing To Bell Housing (Steel)(C Shaped) 2013-Up 1

© Whatever It Takes Transmission Parts. Inc.

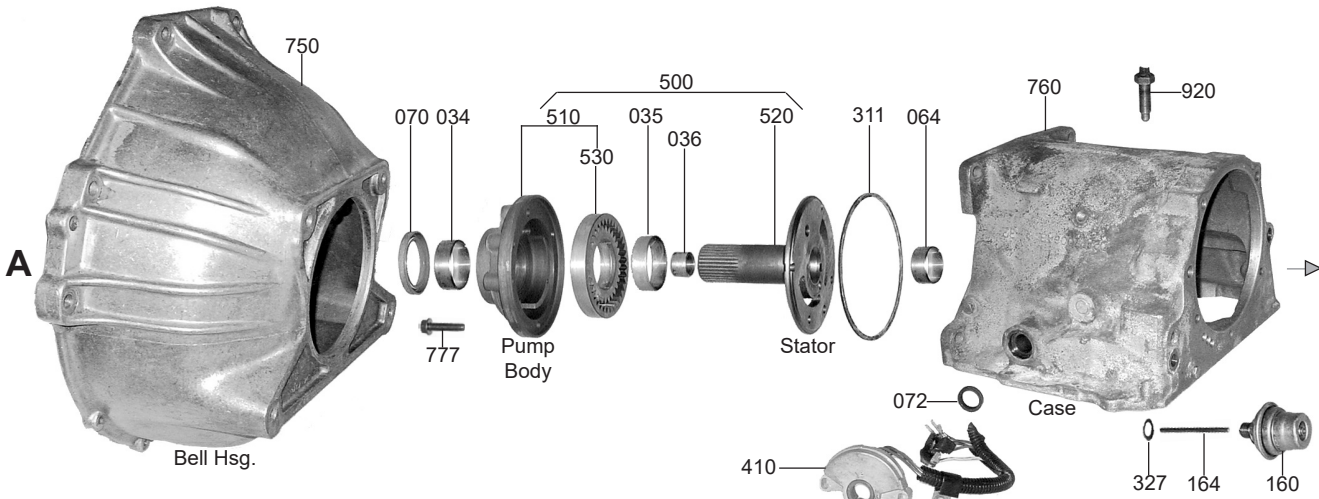

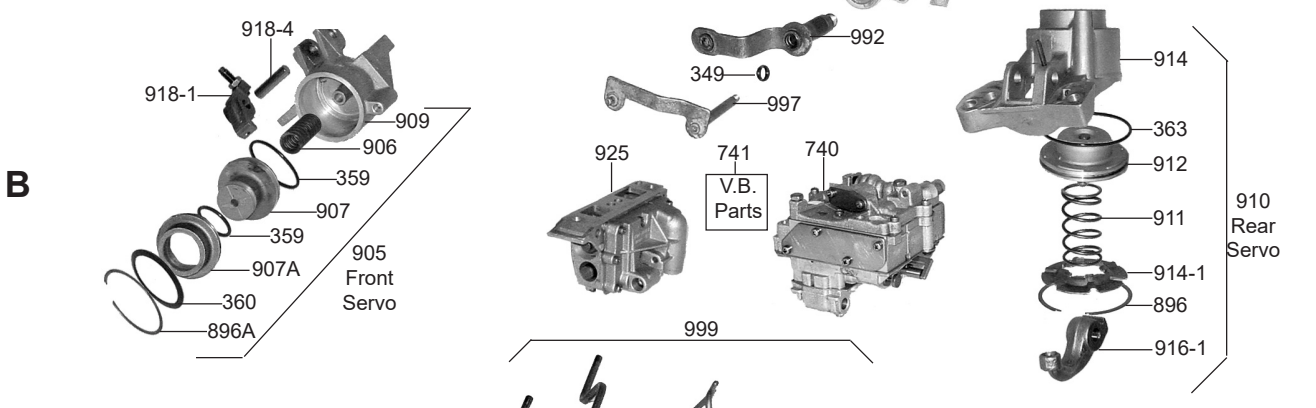



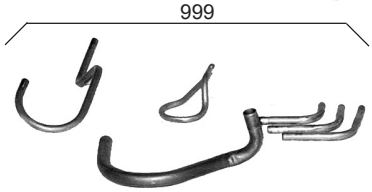

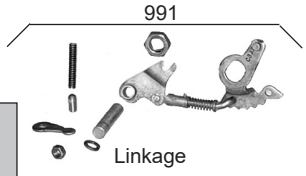

NOTE: To ID the Transmission, Measure the Cast Iron Case Front to Back.

BW8 = 10” (No Modulator)(14 Pan Bolts)
FMX = 10” (W/Modulator)(14 Pan Bolts)
BW12 - 9 7/8” (14 Pan Bolts)
Small Case = 9 7/8”(14 Pan Bolts)
Medium Case = 10 1/4” (14 Pan Bolts)
Large Case = 10 7/8” 1958-60 (14 Pan Bolts)
Large Case = 11 1/2” 1961-65 (16 Pan Bolts)

Early Models

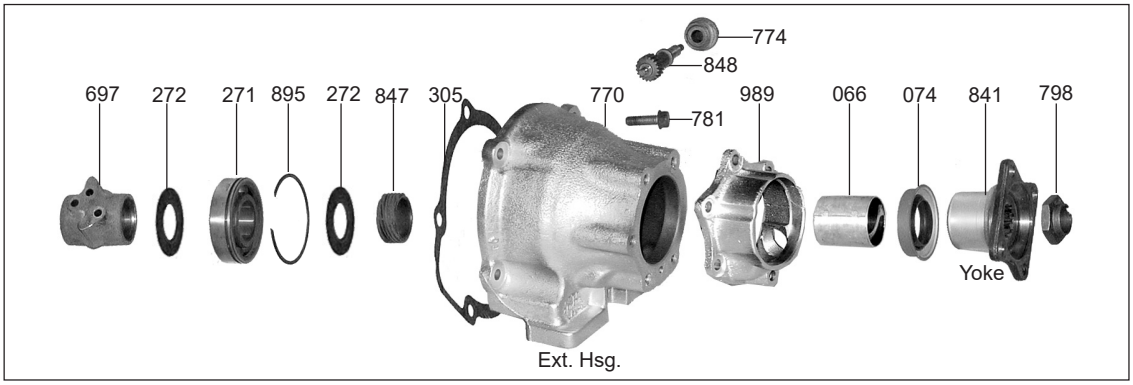

000 P&R Kit
002 OHK Kit
004 Master L/Steels Kit
006 Master W/Steels Kit
011 Filter Kit
030 Bushing Kit
119 Friction Module
139 Steel Module
165 V.B. Kit
175 Ring Kit
390 External Seal Kit

© Whatever It Takes Transmission Parts. Inc.

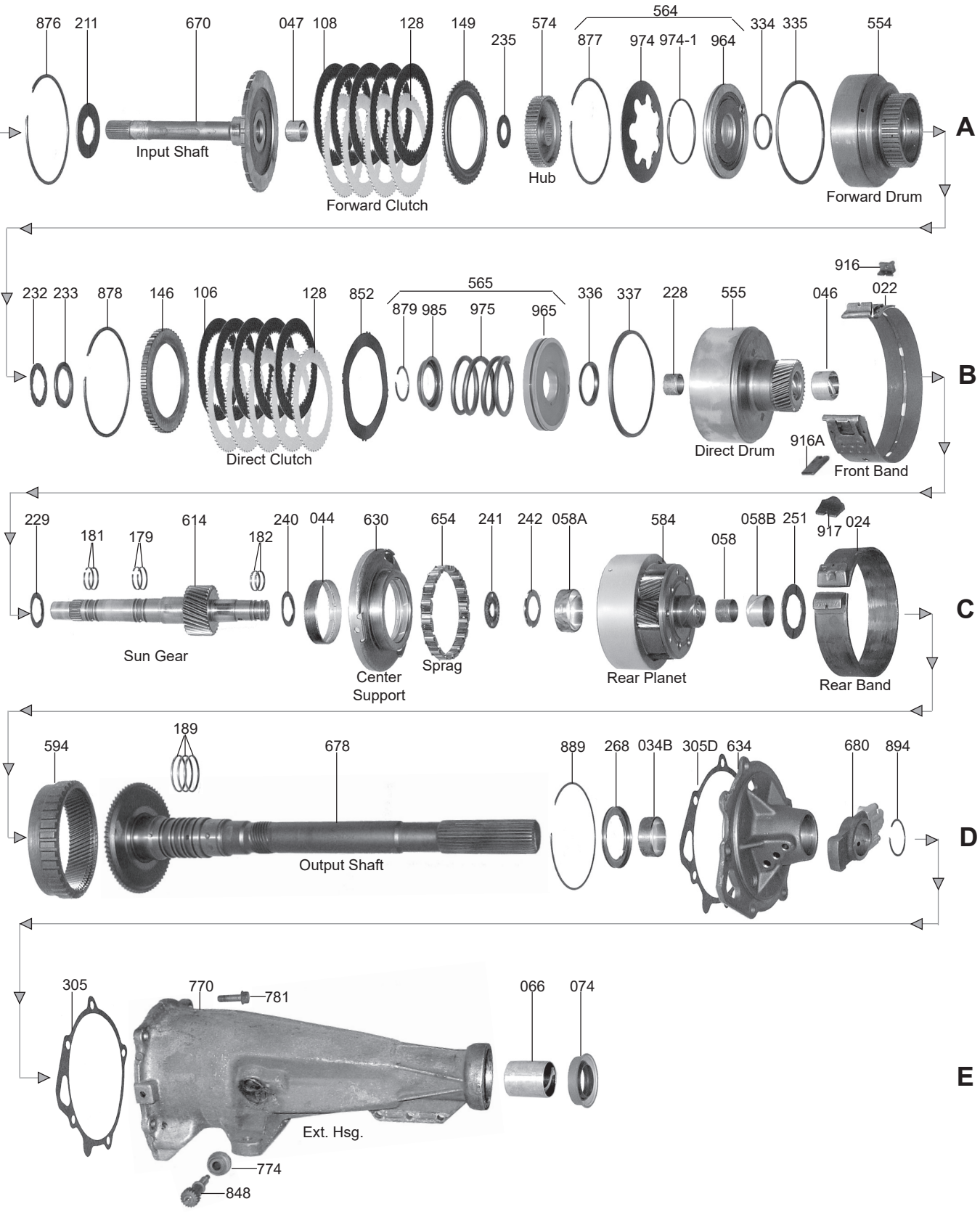

FORD

© Whatever It Takes Transmission Parts. Inc.

PART #	PAPER & RUBBER KIT	QTY.	REFERENCE #
106000	Paper & Rubber Kit, FMX 1968-81	1	
106000A	Paper & Rubber Kit, BW 8-12 1956-74	1	
106000B	Paper & Rubber Kit, Small Case 1951-67	1	
106000C	Paper & Rubber Kit, Medium Case 1955-71	1	
106000D	Paper & Rubber Kit, Large Case 1955-65	1	

PART #	OVERHAUL KITS	QTY.	REFERENCE #
106002	Overhaul Kit, FMX 1968-81	1	
106002A	Overhaul Kit, BW 8-12 1956-74	1	
106002B	Overhaul Kit, Small Case 1951-67	1	
106002C	Overhaul Kit, Medium Case 1955-71	1	
106002D	Overhaul Kit, Large Case 1955-65	1	

PART #	MASTER L/STEEL KIT	QTY.	REFERENCE #
106004	Master L/Steels Kit, 1968-81	1	
106004A	Master L/Steels Kit, BW 8-12 1956-74	1	
106004B	Master L/Steels Kit, Small Case 1951-67	1	
106004C	Master L/Steels Kit, Medium Case 1955-71	1	
106004D	Master L/Steels Kit, Large Case 1955-65	1	

PART #	MASTER W/STEEL KIT	QTY.	REFERENCE #
106006	Master W/Steels Kit, FMX 1968-81	1	
106006A	Master W/Steels Kit, BW 8-12 1956-74	1	
106006B	Master W/Steels Kit, Small Case 1951-67	1	
106006C	Master W/Steels Kit, Medium Case 1955-71	1	
106006D	Master W/Steels Kit, Large Case 1955-65	1	

PART #	FILTER	QTY.	REFERENCE #
106010	Filter, FMX Felt 1968-81	1	D8AZ-7A098-A
106010A	Filter, FMX Brass 1968-81	1	DOAZ-7A098-A
106010AB	Filter, BW 8-12 1956-74	1	3186706
106010B	Filter, Small Case 1951-67 (Brass With 2 Holes & 2 Indentions In The Brass, 1 By Each Hole)	1	
106010C	Filter, Medium Case 1955-71 (Brass With 2 Holes & 1 Indention By The Large Hole)	1	B9MP-7A089-B

PART #	FILTER KIT	QTY.	REFERENCE #
106011	Filter Kit, FMX Felt 1968-81	1	
106011A	Filter Kit, FMX Brass 1968-81	1	
106011AB	Filter Kit, BW 8-12 1956-74	1	
106011B	Filter Kit, Small Case 1951-67	1	
106011C	Filter Kit, Medium Case 1955-71	1	

PART #	BANDS	QTY.	REFERENCE #
106022	Band, FMX Front (Flex) 1968-81	1	D7AZ-7A162-A
106022A	Band, FMX Front (Solid) 1968-73	1	D2AZ-7A162-A
106022B	Band, Front (Center Lug) 1955-56 (R & R Only)	1	C2AZ-7A162-A
106022C	Band, Front (Off Set Lug) (Thick Lining) 1961-65	1	C2AZ-7A162-B
106022D	Band, Front (1.625” Wide) 1961-71	1	B6AZ-7A162-A
106022E	Band, Front (Off Set Lug) (Paper Lining) 1961-65	1	C7AZ-7A162-A
106022S	Band, FMX Front (Slip-In Or Snap) 1968-81	1	
106024	Band, FMX Small & Medium Case Rear 1955-81	1	B5SZ-7A163-B
106024A	Band, Small & Medium Case Rear 1951-55	1	
106024AA	Band, Large Case Rear 1955-72	1	

PART #	BUSHINGS	QTY.	REFERENCE #
106030	Bushing Kit, FMX 1968-81	1	
106030A	Bushing Kit, BW 8-12 1956-74	1	
106030B	Bushing Kit, Small Case 1951-67	1	
106030C	Bushing Kit, Medium Case 1955-71	1	
106030D	Bushing Kit, Large Case 1955-72	1	

© Whatever It Takes Transmission Parts. Inc.

36034	Bushing, FMX Pump Body (Babbit)	1	
36034B	Bushing, FMX Pump Body (Bronze)	1	
106034	Bushing, BW8/BW12 Pump Body (Small/Medium/Large Case Cruiso) 1950-74	1	
106034B	Bushing, Cruiso Rear Pump	1	B5AZ-7B260-A
106035	Bushing, Small & Medium Case Pump Gear	1	
106036	Bushing, FMX Stator Front (29 Spline) 1968-81	1	
106036B	Bushing, Small Case Stator (17 Spline) 1951-59	1	
106036BA	Bushing, Small & Medium Case Stator (29 Spline) 1955-71	1	
106036D	Bushing, Large Case Stator 1955-65	1	
106046	Bushing, FMX Direct Drum	1	B1AZ-7B262-2
106047	Bushing, FMX Input Shaft	1	B1AZ-7B120-A
106058	Bushing, FMX Planet (Inner, Rear) (Small)	1	B1AZ-7B257-B
106058B	Bushing, FMX Planet (Outer)	1	B5AZ-7B256-A
106064	Bushing, Small & Medium Case Front Case	1	B5AZ-7B025-A
36066	Bushing, FMX Extension Housing (Bronze)	1	
36066T	Bushing, FMX Extension Housing (Teflon Coated)	1	

PART #	METAL CLAD SEALS	QTY.	REFERENCE #
36070	Seal, FMX/Medium Case Front Pump (W/Out Flange) 1968-Up	1	C2AZ-7A248-A
106070B	Seal, Front Pump (Small, Medium & Large Case) 1951-67	1	C3AZ-7A248-A
36072	Seal, FMX/Small/Medium/Large Case linkage Shaft	1	D5AZ-7B498-A
36074	Seal, FMX/Small/Medium/Large Case (Some) Rear W/Out Boot	1	D5AZ-7B052-A
36074B	Seal, FMX/Small/Medium/Large Case (Some) Rear With Boot	1	
36074C	Seal, FMX Small/Medium/Large Case (Some) Rear (3.066”OD)(W/Bolt On Yoke)	1	
44074C	Seal, FMX/Small/Medium Case (Some) Rear (Small W/Short Boot)	1	
106074L	Seal, Large Case (Lincoln & Continental) 1961-65	1	C1VP-7052A

PART #	FRICTION CLUTCH	QTY.	REFERENCE #
106106	Friction, Cruiso Direct Clutch (.095”) 1951-66	5	C2AP-7B164-A
106106A	Friction, FMX Direct Clutch (.079”) 1967-81	5	C8AZ-7B164-G
106108	Friction, FMX/Cruiso Forward Clutch (.061”)(Waffle) 1951-81	1	
106108A	Friction, FMX/Cruiso Forward Clutch (.058”)(Waffle) 1951-81	5	C9AZ-7B164-A
106108B	Friction, FMX Forward Clutch (.088”) 1967-81	5	C9AZ-7B164-B
106108C	Friction, FMX Forward Clutch (.073”) 1967-81	5	C9AZ-7B164-C
106119	Friction Module, FMX	1	
106119A	Friction Module, BW 8-12/Small/Medium Case	1	

PART #	STEEL CLUTCH	QTY.	REFERENCE #
76128	Steel, FMX Forward/Direct Clutch (Flat) (.068”) 1968-81	7-8	C8AZ-7B442-A
106128	Steel, Cruiso Direct Clutch (Dished) (.067”) 1950-69	4-6	
106128A	Steel, Cruiso Direct Clutch (.092”) 1963-72	1	C2AZ-7B442-A
106128D	Steel, Large Case Forward/Direct Clutch 1958-65	4	
106139	Steel Module, FMX	1	
106139B	Steel Module, BW 8-12	1	
106139C	Steel Module, Medium Case 1955-71	1	

PART #	MODULATORS	QTY.	REFERENCE #
106160	Modulator, FMX/Cruiso Green Stripe (Single Line) 1961-81	1	D5AZ-7A377-A
146160	Modulator, FMX Blue Stripe (Single Line) 1968-81	1	
106160A	Modulator, FMX Red Stripe (Dual Line)	1	
106160B	Modulator, FMX Balck Stripe (Dual Line) (351 Engine)	1	
106160C	Modulator, FMX Orange Stripe (Dual Line) (302 Engine)	1	FD30
106160CA	Modulator, FMX Orange Stripe (Dual Line)	1	FD30A
106160D	Modulator, FMX Yellow Stripe (Single Line)	1	F3
44162	Hose, Modulator (Elbow)	1	C1AZ-7B087-E

PART #	VALVE BODY KITS	QTY.	REFERENCE #
T106165	Shift Kit, FMX 1967-72	1	SK®3-67
T106165A	Shift Kit, FMX 1973-81	1	SK®3-73
T106165AA	Shift Kit, Cruiso 1963-66	1	SK®3VL
T106171	Reprogramming Kit, FMX Competition 1967-72	1	37-1
T106171A	Reprogramming Kit, FMX Competition 1973-81	1	33-1
T106173	Reprogramming Kit, FMX Competition Stick Shift 1967-Up	1	FMX-3

© Whatever It Takes Transmission Parts. Inc.

PART #	OIL SEALING RINGS	QTY.	REFERENCE #
106175	Ring Kit, FMX 1968-81	1	
106175A	Ring Kit, BW 8-12 1967-74	1	
106175B	Ring Kit, Small Case 1951-71	1	
106175C	Ring Kit, Medium Case 1955-72	1	
106175D	Ring Kit, Large Case (4 Rings Only) 1955-65	1	
106179B	Ring, FMX Sun Gear (Center) 1968-81	2	COAZ-7C169-A
36181	Ring, FMX Governor 1968-81	4	
106181	Ring, BW 8-12 Sun Gear (Front) 1967-74	2	1P-77542-A
106181A	Ring, FMX Sun Gear (Front) 1968-81	2	B5SZ-77542-A
106182C	Ring, FMX Sun Gear (Rear) 1968-81	2	1P-77543-B
106182D	Ring, Cruiso Sun Gear (Rear) 1955-70	2	
106189	Ring, FMX Governor (Use 36181)	4	
106189A	Ring, BW 8-12 Governor 1967-74	4	C6AZ-7D019-B

PART #	WASHERS & BEARINGS	QTY.	REFERENCE #
106211	Washer, FMX Input Shaft To Stator	1	
106228	Caged Bearing, FMX Inside Direct Drum	1	C8AZ-7D480A
106229	Washer, FMX Direct Drum To Sun Gear	1	
106232	Washer, FMX Forward Drum To Direct Drum (Bronze)	1	
106233	Race, FMX Forward Drum To Direct Drum (Steel)	1	
106235	Washer, FMX Input Shaft To Forward Hub (Fiber)	1	
106240	Race, FMX Sun Gear To Planet (Front)	1	D3AZ-7C096A
106241	Thrust Bearing, FMX Sun Gear To Planet (Also FIts Med Case Cruiso)	1	
106242	Race, FMX Sun Gear To Planet (Rear) (Also Fits Med Case Crusio)	1	
106251	Washer, FMX Planet To Output Shaft (.062")	1	
106251A	Washer, FMX Planet To Output Shaft (.068")	1	
106251AA	Washer, FMX Planet To Output Shaft (.075")	1	
106251AB	Washer, FMX Planet To Output Shaft (.082")	1	
106268	Bearing W/Race, FMX Output Shaft To Support	1	
106268C	Washer, Medium Case Output Shaft To Rear Pump (.059: Thick)(4.192"OD)(2.212"ID)(With 2 Round Outer Tabs)	1	
106271	Ball Bearing, FMX Output Shaft To Extention Housing	1	
106272	Washer, FMX Ball Bearing To Governor Sleeve & Ball Bearing To Speed-O Gear	2	

PART #	GASKETS & RUBBER COMPONENTS	QTY.	REFERENCE #
106300	Gasket, FMX/Small Case Bottom Pan (Cork)	1	B5AZ-7A191-A
106300C	Gasket, Medium Case Bottom Pan (Cork)(Also Fits Large Case 1958-60)	1	B5AZ-7A191-B
106300D	Gasket, Large Case Bottom Pan 1955-60	1	
106300DA	Gasket, Large Case Bottom Pan 1961-Up	1	
106305	Gasket, FMX Extension Housing 1968-81	1	D2AZ-7086-A
106305A	Gasket, BW 8-12 Extension Housing 1967-74	1	
106305B	Gasket, Small Case Extension Housing To Rear Pump	1	
106305C	Gasket, Small & Medium Case Cruiso & BW8 1951-70 (Rear Support To Tail Housing)	1	
106305D	Gasket, Small/Medium/Large Case Cruiso, BW8/12, FMX Case To Governor Collector 1951-65	1	
106310	Gasket, Cruiso Rear Pump To Case	1	
106311	Gasket, Small & Medium Case Cruiso & BW8 1951-70 (Rear Support To Tail Housing)	1	B1AZ-7A136-A
26327	Gasket, FMX/Small/Medium Case Modulator	1	C2AP-7B426-A
106334	O-Ring, FMX Forward Clutch (Inner)	1	
106335	Lip Seal, FMX Forward Clutch (Outer)	1	
106336	Lip Seal, FMX Direct Clutch (Inner)	1	C8AZ-7E212-A
106337	Lip Seal, FMX Direct Clutch (Outer)	1	C8AZ-7C051-A
36349	O-Ring, FMX Throttle Shaft	1	386078-S
106359	Seal, FMX Front Servo (Large)	1	
106375	O-Ring, Small/Medium Case Outlet Tube O-Ring	1	
106361A	O-Ring, FMX Front Servo Guide (1.890"ID) 1968-Up	1	
44371A	O-Ring, FMX Filler Tube	1	6264902
26385	Hockey Puck, FMX Intermediate Accumulator Check Valve Seal (Rubber) 1964-86	1	
106390	Seal Kit, FMX External 1968-81	1	
106390C	Seal Kit, Small Case Cruiso (External) 1955-72	1	

PART #	HARD PARTS	QTY.	REFERENCE #
106500	Pump, FMX (29 Spline Input Shaft) 1968-81	1	C8AZ-7A103-A
106500A	Pump, FMX (17 Splines Input Shaft)	1	
106500AB	Pump, BW 8-12 (29 Spline Input Shaft) Lugs On Inner Gear Measure 7/16" Long At Lug Tip	1	
106500C	Pump, Medium Case 1968-73 (Lugs On Inner Gear Measure 1/4" Long At Lug Tip)	1	

© Whatever It Takes Transmission Parts. Inc.

106510	Pump Body W/Gears, FMX 1968-81	1	
106510AB	Pump Body W/Gears, BW 8-12 (Lugs On Inner Gear Measure 7/16” Long At Lug Tip)	1	
106510C	Pump Body W/Gears, Medium Case (Lugs On Inner Gear Measure 1/4” Long At Lug Tip)	1	
106520	Stator, FMX (29 Spline Input Shaft) 1968-81	1	
106520C	Stator, Medium Case 1968-73	1	
106554	Drum, FMX Forward Clutch (Front) (27 Teeth Forward Steels) 1968-Up	1	
106554C	Drum, Medium Case Forward Clutch (Front) 55 Teeth Forward Steels	1	
106555	Drum, FMX Direct (Rear W/Sun Gear) Has 27 Lugs In Drum Where Steels Ride)	1	C9AZ-7A626-A
106555C	Drum, Medium Case Direct (Rear W/Sun Gear) Has 55 Lugs In Drum Where Steels Ride	1	
106564A	Piston Kit, FMX Forward Clutch (Cast #RF-DOAP)	1	
106564B	Piston Kit, Small/Medium Case Forward Clutch (Cast #B9AP)	1	
106565	Piston Kit, FMX Direct Clutch (Cast #RFDOZP)	1	
106565A	Piston Kit, FMX Direct Clutch (Cast #RFDOYP) (.750” Thick)	1	
106574	Hub, FMX Forward Clutch	1	
106584	Planet, FMX 1968-81	1	C3AZ-7A398-C
106584A	Planet, Small Case (Smooth Race)	1	
106614	Sun Gear, FMX (30 Teeth) (10 1/4” Long)	1	
106614A	Sun Gear, FMX (30 Teeth) (10 3/4” Long)	1	
106634C	Rear Pump (Support), Medium Case (W/Gears)	1	

PART #	SPRAGS & ONE WAY CLUTCHES	QTY.	REFERENCE #
34654	Sprag, FMX Low Clutch Roller (Rear)	1	

PART #	HARDPARTS (Continued)	QTY.	REFERENCE #
106680	Governor, FMX	1	
106681A-3	Spring, FMX Governor Return Spring	1	D2AZ-7C063-A
106740	Valve Body, FMX (With Small Valves) 1968-72	1	
106740A	Valve Body, FMX (With Large Valves) 1973-81	1	
26741V-5	Check Ball, FMX/Cast Iron Cruiso Valve Body (.212”) Rubber	AR	
106750	Bell Housing, FMX/Small Case (Small Block) No Cable Mount	1	
106750A	Bell Housing, FMX (Small Block) With Shift Cable Mount	1	
106750AB	Bell Housing, FMX/Small Case (Big Block) No Cable Mount	1	
106750AC	Bell Housing, FMX (Big Block) With Shift Cable Mount	1	
106750AD	Bell Housing, FMX/Small Case (390 Round Bell Style)	1	
106760	Case, FMX (10” Long) 1968-76 (Can Use 106760A)	1	
106760A	Case, FMX (10” Long) 1977-Up (Can Use 106760)	1	
106760B	Case, Small Case (9 7/8” Long) No Dip Stick 1951-67	1	
106765	Pan, FMX (Filler Tube In Case) 1968-81	1	
106765B	Pan, Small Case (Filler Tube Screws In Pan) 1951-67	1	
106770	Ext Housing, FMX 2Wd (13”) (Uses 5 Short Bolts) 68-81	1	
106770AC	Ext Housing, FMX (16 1/4:) (Uses 5 Short Bolts) 68-81	1	
106770B	Ext Housing, Small Case (13 1/2”) (uses 4 Short & 1 Long Bolt)	1	
106770BA	Ext Housing, Small Case (16 5/8”) (Uses 4 Short & 1 Long Bolt)	1	
106770BF	Ext Housing, Small Case (7 1/4”) (Uses 4 Short & 1 Long Bolt)(Truck Bolt-On Yoke Type)	1	
S36779	Pan Bolt, FMX (Sonnax)	AR	
106877A	Snap Ring, FMX/Small/Medium Case Holds Forward Clutch Cushion	1	
106889	Snap Ring, FMX Holds Ring Gear To Output Shaft	1	
106894	Snap Ring, FMX Holds Governor To Output Shaft	1	
106964A	Piston, FMX Forward Clutch (Cast #RF-DOAP)	1	
106974	Spring, FMX Front Clutch Spring	1	C1AP-7B070-A
106974A	Cushion, FMX/Small/Medium Case Forward Clutch Disc Spring	1	

© Whatever It Takes Transmission Parts. Inc.

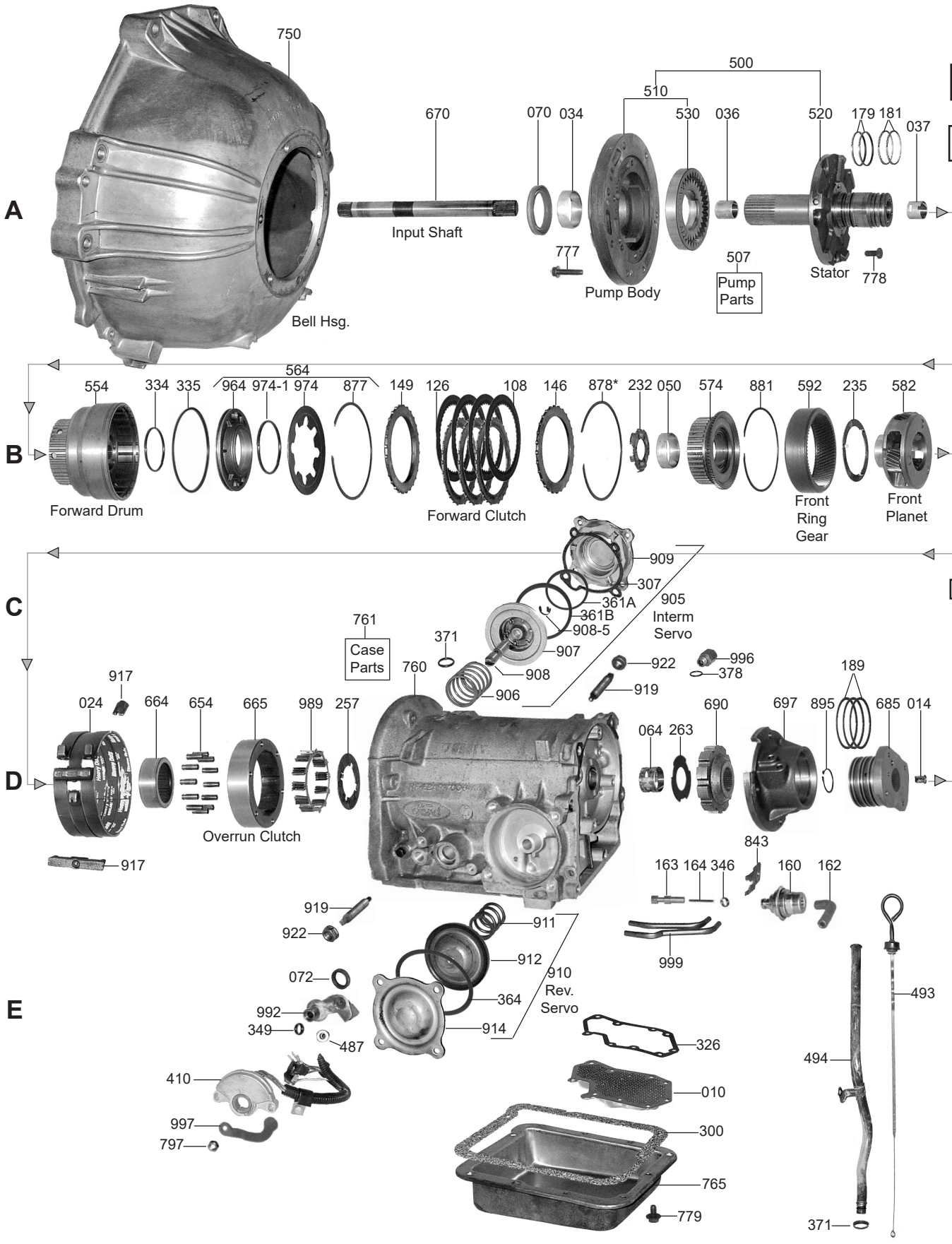
A
B
C
D
E
750
Bell Hsg.
670
Input Shaft
070
034
777
500
510
530
036
507
Pump Parts
Pump Body
520
179
181
037
Stator
778
554
334
335
564
964
974-1
974
877
149
126
108
146
878*
232
050
574
881
592
235
582
Forward Drum
Forward Clutch
Front Ring Gear
Front Planet
909
307
361A
361B
908-5
905
Interm Servo
907
908
906
761
Case Parts
371
760
922
919
996
378
189
917
024
664
654
665
989
257
Overrun Clutch
690
697
895
685
014
064
263
843
163
164
346
160
162
999
911
912
910
Rev. Servo
914
364
072
992
349
487
410
997
797
326
010
300
765
779
493
494
371
000
P&R Kit
002
OHK Kit
004
Master L/Steels Kit
006
Master W/Steels Kit
011
Filter Kit
030
Bushing Kit
119
Friction Module
139
Steel Module
165
V.B. Kit
175
Ring Kit
200
Washer Kit
390
External Seal Kit
400
Tech Manual

FORD

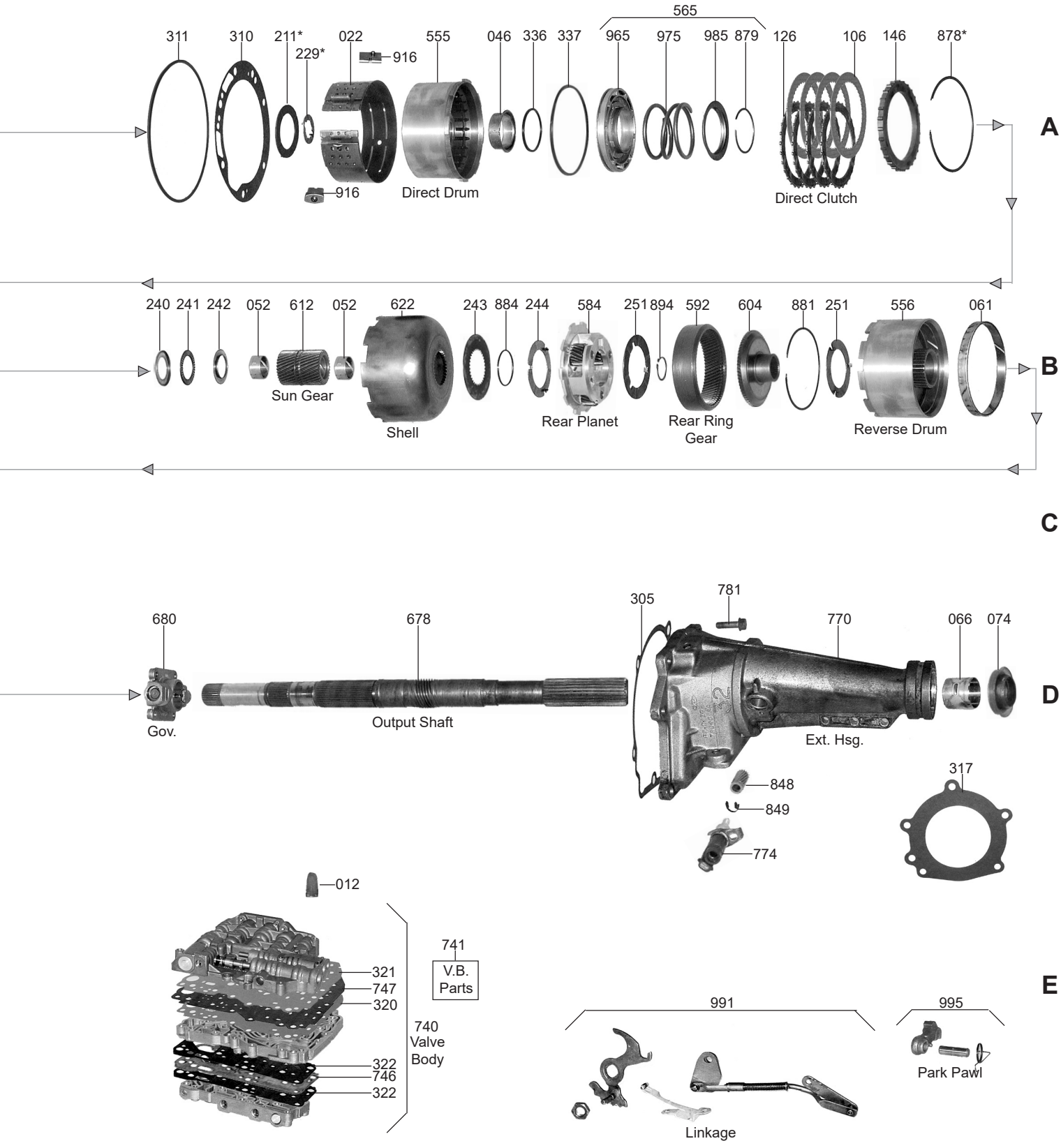

FORD

© Whatever It Takes Transmission Parts. Inc.

PART #	PAPER & RUBBER KIT	QTY.	REFERENCE #
26000	Paper & Rubber Kit, C-4 1964-69 (For 1964 Only Sell One 26320 Also)	1	
26000C	Paper & Rubber Kit, C-4 1970-83	1	
26000E	Paper & Rubber Kit, C-5 1982-86	1	

PART #	OVERHAUL KITS	QTY.	REFERENCE #
26002	Overhaul Kit, C-4 1964-69 (For 1964 Only Sell One 26320 Also)	1	
26002C	Overhaul Kit, C-4 Combo 1970-83	1	
26002E	Overhaul Kit, C-5 1982-86	1	

PART #	MASTER L/STEEL KIT	QTY.	REFERENCE #
26004	Master L/Steels Kit, C-4 1964-69 (For 1964 Only Sell One 2632 Also)	1	
26004C	Master L/Steels Kit, C-4 Combo 1970-83	1	
26004E	Master L/Steels Kit, C-5 1982-86	1	

PART #	MASTER W/STEEL KIT	QTY.	REFERENCE #
26006	Master W/Steels Kit, C-4 1964-69 (For 1964 Only Sell One 26320 Also)	1	
26006C	Master W/Steels Kit, C-4 Combo 1970-83	1	
26006E	Master W/Steels Kit, C-5 1982-86	1	

PART #	FILTER	QTY.	REFERENCE #
26010	Filter, C-4 1964	1	C4AZ-7A098-B
26010A	Filter, C-4 1965-69	1	C5AZ-7A098-C
26010B	Filter, C-4 Flat (Shallow Pan) 1970-83	1	D0DZ-7A098-B
26010C	Filter, C-4 W/Hump (Deep Pan) 1974-83	1	D4FZ-7A098-A
26010D	Filter, C-4 Bronco (4x4) 1973-77	1	D3BZ-7A098-A
26010E	Filter, C-5 (2WD) 1982-86	1	E2DZ-7A098-A
26010EA	Filter, C-5 (4x4) 1982-86	1	E3TZ-7A098-A
26010G	Filter, C-4 (Felt) (Flat) Shallow Bottom 1970-83	1	

PART #	FILTER KIT	QTY.	REFERENCE #
26011	Filter Kit, C-4 1964 (Cork)	1	
26011A	Filter Kit, C-4 1965-69 (Cork)	1	
26011B	Filter Kit, C-4 Flat (Shallow Pan) 1970-83 (Cork)	1	
26011C	Filter Kit, C-4 W/Hump (Deep Pan) 1974-83 (Cork)	1	
26011D	Filter Kit, C-4 Bronco (4x4) 1973-77 (Cork)	1	
26011E	Filter Kit, C-5 (2WD) 1982-86 (Cork)	1	
26011EA	Filter Kit, C-5 (4x4) 1982-86 (Cork)	1	
26011G	Filter Kit, C-4 (Felt) (Flat) Shallow Bottom 1970-83 (Cork)	1	

PART #	MISC. FILTERS	QTY.	REFERENCE #
26012	Screen, C4/C5 Pump Inlet	1	
26014	Screen, C-4 Governor	1	C7AZ-7E424-A

PART #	BANDS	QTY.	REFERENCE #
26022	Band, C-4/C-5 Intermediate (Flex) 1965-86	1	D9AZ-7D034-C
26022K	Band, C-4/C-5 Intermediate (Flex) 1965-86 Kevlar	1	
26022A	Band, C-4 Intermediate (Rigid) (1.280") W/Arrow 1964-E65	1	
26022AA	Band, C-4 Intermediate (Rigid) (1.280") No Arrow 1964-E65	1	
26022B	Band, C-4 Intermediate (Rigid) (2.100") 1965-67	1	
26022BHP	Band, C-4/C-5 Intermediate (Rigid)(2.125"Wide)(Red Eagle) 1965-86	1	
26022S	Band, C-4/C-5 Intermediate (Slip-In Or Snap) 1965-86	1	D9AZ-7D034-A
26024	Band, C-4/C-5 Reverse (Rear) 1964-86	1	D0AZ-7D095-A

PART #	BUSHINGS	QTY.	REFERENCE #
26030	Bushing Kit, C-4 1964-69	1	
26030B	Bushing Kit, C-4/C-5 1970-86	1	
26034	Bushing, C-4/C-5 Pump (Babbit)	1	C0AP-7B258-A
26034A	Bushing, C-4/C-5 Pump (Bronze)	1	
26036	Bushing, C-4 Front Stator 1964-69	1	C4AZ-7B261-A
26036A	Bushing, C-4/C-5 Front Stator 1970-86	1	D0AZ-7B261-A

© Whatever It Takes Transmission Parts. Inc.

26037	Bushing, C-4/C-5 Rear Stator 1970-86	1	D0AZ-7D018-A
26037A	Bushing, C-4 Rear Stator 1964-69	1	C4AZ-7D018-B
26046	Bushing, C-4 Direct Drum 1964-69	1	C4AZ-7D046-A
26046A	Bushing, C-4/C-5 Direct Drum 1970-86	1	D0AP-7D046-B
26050	Bushing, C-4/C-5 Forward Clutch Hub	1	C6AZ-7E059-A
26052	Bushing, C-4/C-5 Sun Gear	2	C4AZ-7D065-A
26061	Bushing, C-4 Reverse Brake Drum (4.527”OD)1964-69	1	C4AZ-7D001-A
26061A	Bushing, C-4/C-5 Reverse Brake Drum (4.685”OD) 1970-86	1	
26064	Bushing, C-4/C-5 Case 1964-86	1	C4AZ-7D001-A
26066	Bushing, C-4/C-5 Extension Housing (1.500”ID) (Babbit) 1964-86	1	
26066A	Bushing, C-4/C-5 Extension Housing (1.500”ID)(Bronze) 1964-86	1	

PART #	METAL CLAD SEALS	QTY.	REFERENCE #
36070	Seal, C-4/C-5 Front (W/Out Flange)	1	C2AZ-7A248-A
36070A	Seal, C-4/C-5 Front (With Flange)	1	C3OP-7A248-A
36072	Seal, C-4/C-5 Linkage	1	D5AZ-7B498-A
44074	Seal, C-4/C-5 Rear (Small W/Out Boot)	1	
44074B	Seal, C-4/C-5 Rear (Small W/Long Boot)	1	
44074C	Seal, C-4/C-5 Rear (Small W/Short Boot)	1	
26074T	Seal, C-4/C-5 Rear (Large, Truck W/Bolt On Yoke)	1	

PART #	FRICTION CLUTCH	QTY.	REFERENCE #
26106	Friction, C-4/C-5 Direct Clutch (.078”) (Waffle) 1965-86	3-4	C5AZ-7B164-D
26106A	Friction, C-4 Direct Clutch (.093”) (Waffle) 1964-65	3-4	C4AP-7B164-B
26106G	Friction, C-4/C-5 Direct Clutch (.078”) (Parallel Grooves) 1981-86	3-4	E2SZ-7B164-A
26106HD	Friction, C-4/C-5 Direct Clutch (.078”) (Heavy Duty) 1965-86	3-4	
26106HP	Friction, C-4/C-5 Direct Clutch (.078”) (Hi Performance) 1965-86	3-4	
26108	Friction, C-4/C-5 Forward Clutch (.061”) (Smooth) 1964-86	4-5	
26108HD	Friction, C-4/C-5 Forward Clutch (.061”) (Heavy Duty) 1964-86	4-5	
26108HP	Friction, C-4/C-5 Forward Clutch (.061”) (Hi Performance) 1964-86	4-5	
26108S1	Friction, C-4/C-5 Forward Clkutch (.061”) (Smooth) (Stage 1) 1964-86 (Also Fits C-4/C-5 Direct Clutch 1964-86)	4-5	
26119	Friction Module, C-4/C-5 1964-Up	1	
26119HP	Friction Module, C-4/C-5 (Hi-Performance) Blue Plates 1964-Up	1	
26119AHP	Friction Module, C-4/C-5 (Hi Performance) Indy Reds 1964-Up	1	

PART #	STEEL CLUTCH	QTY.	REFERENCE #
26126	Steel, C-4 Forward & Direct Clutch (C-5 Forward) (.078”Thk)(26 Teeth)(4.780”OD) 1964-86	3-4	
26126A	Steel, C-4 Forward Clutch 1964-67	3-4	
26126B	Steel, C-4 Forward & Direct Clutch (C-5 Forward) (.078”) 1964-86 (Kolene)	3-4	
26126C	Steel, C-4/C-5 Direct Clutch (.060”) (Thin) 1964-86	3-4	
26126E	Steel, C-5 Direct Clutch (.090”) 1982-86	3-4	
26126X	Steel, C-4/C-5 Forward & Direct Clutch (.095”) Oversized 1964-86	AR	
26139	Steel Module, C-4 1964-83	1	
26139E	Steel Module, C-5 1982-86	1	

PART #	CLUTCH PRESSURE PLATES	QTY.	REFERENCE #
26146	Pressure Plate, C-4/C-5 Forward & Direct Clutch (Top)(.220”)(28 Teeth)(3.573”ID)	1	
26146A	Pressure Plate, C-4/C-5 Forward & Direct Clutch (Top)(.141”)(28 Teeth)(3.573”ID)	1	E1AZ-7B066-B
26146B	Pressure Plate, C-4/C-5 Forward & Direct Clutch (.297”) Top	1	E2SZ-7B066-B
26149	Pressure Plate, C-4/C-5 Forward Clutch (.267”) Bottom	1	
26149A	Pressure Plate, C-4/C-5 Forward Clutch (.313”) Bottom	1	E1AZ-7B066-A

PART #	MODULATORS	QTY.	REFERENCE #
26160	Modulator, C-4 White Stripes (Screw In) 1964-72	1	C4AZ-7A377-B
26160A	Modulator, C-4 Dual Red Stripe (Push In) 1973-76	1	D3OZ-7A377-A
26160B	Modulator, C-4 Single Blue Stripe	1	D9AZ-7A377-A
26160G	Modulator, C-4/C-5 Single Green Stripe (Push In) 1974-86	1	D5AZ-7A377-B
26160W	Modulator, C-5 Single White Stripe (Push In) 1982-86	1	E2TZ-7A377-A
26160Y	Modulator, C-4 Single Yellow Stripe (Push In) 1973-83	1	D2AZ-7A377-A
44162	Hose, C-4/C-5 Modulator (Elbow)	1	
26163	Valve, C-4 Under Modulator Pin (.435”OD) (For Screw In Type Modulator) 1966-72	1	
26163A	Valve, C-4/C-5 Under Modulator Pin (.375”OD) (For Push In Type Modulator) 1972-86	1	
26164	Modulator Pin, C-4/C-5 (1 5/8” Long)	1	

© Whatever It Takes Transmission Parts. Inc.

PART #	VALVE BODY KITS	QTY.	REFERENCE #
T26165	Shift Kit, C-4 All 1964 & Early 65 Mustang (Corrects, Reduces Chatter & Spin Up)	1	SK® 4
T26165A	Shift Kit, C-4 1965-66 Except 64 1/2 Mustang (Corrects, Reduces Soft Shifts Spin Up 3-2, Long 2-3)	1	SK® 4L
T26165C	Shift Kit, C-4 1967-69 (6 Cylinder Only) Was T26165B But Now Included In T26165C)	1	SK® 4S
T26165E	Shift Kit, C-4 1970-72 (Corrects, Reduces Soft 2-3, 2nd Band Failure, Kickdown To Easy, Provides More Overall Line For Kickdowns)	1	SK® 4-71
T26165F	Shift Kit, C-4/C-5 1973-Up (Corrects, Reduces Shuttle Shifts, 3-2 Cut Loose, 2nd Band Failure, No Reverse Hot, 1-2 Slide, Soft 2-3)	1	SK® C5
T26169	Reprogramming Kit, C-4 1967-69 Automatic Shift, Heavy Duty, Competition / Off Road / Heavy Duty	1	47-2
T26169A	Reprogramming Kit, C-4 1970-Up Automatic Shift, Heavy Duty, Competion / Off Road / Heavy Duty	1	40-2
T26171	Reprogramming Kit, C-4 1967-69 Stick Shift Full Manual Converts Back To Auto C-5 Heavy Duty & Hi Performance Use 1973-Up C-4 Valve Body & Filter With 40-2 Kit	1	47-3
T26171A	Reprogramming Kit, C-4 1970-Up Stick Shift Full Manual Converts Back To Auto	1	40-3

PART #	OIL SEALING RINGS	QTY.	REFERENCE #
26175	Ring Kit, C-4 1964-69	1	
26175A	Ring Kit, C-4 1970-77	1	
26175AT	Ring Kit, C-4 1970-77 (Teflon)	1	
26175B	Ring Kit, C-4/C-5 1978-86	1	
26175BT	Ring Kit, C-4/C-5 (Teflon) 1978-86	1	
26175C	Ring Kit, C-4/C-5 Combo 1970-86	1	
26179	Ring, C-4 Direct Clutch (1.750”OD) (.093” Wide) Metal 1964-69	2	0445-016-002A
26179A	Ring, C-4/C-5 Direct Clutch (1.800”OD) (.093” Wide) Metal 1970-86	2	C4AZ-7D011-A
26181	Ring, C-4 Forward Clutch (1.707”OD) (.093” Wide) Metal 1964-69	2	C4AZ-7D019-B
26181A	Ring, C-4 Forward Clutch (1.757”OD) (.093” Wide) Metal 1970-77	2	D0AZ-7A019-A
26181B	Ring, C-4/C-5 Forward Clutch (1.757”OD) (.123” Wide) Metal 1978-86	2	D7AZ-7D019-A
26189	Ring, C-4/C-5 Governor (2.687”OD) (.093” Wide) Metal 1964-86	3	C4AZ-7D011-A
26189T	Ring, C-4/C-5 Governor (2.687”OD) (.093” Wide) Teflon 1964-86	3	

PART #	WASHERS & BEARINGS	QTY.	REFERENCE #
26200	Washer Kit, C-4 1964-69	1	
26200C	Washer Kit, C-4/C-5 1970-86	1	
26211	Washer, C-4 Stator To Direct Drum W/Out Tangs (.040”) 1964-66	1	C4AZ-7D014-A
26211A	Washer, C-4 Stator To Direct Drum W/Out Tangs (.055”) 1964-66	1	C4AZ-7D014-B
26211B	Washer, C-4 Stator To Direct Drum W/Out Tangs (.072”) 1964-66	1	C4AZ-7D014-C
26211BA	Washer, C-4/C-5 Stator To Direct Drum W/Tangs (.072”) 1966-86	1	D0AZ-7D014-A
26211C	Washer, C-4/C-5 Stator To Direct Drum W/Out Tangs (.089”) 1966-86	1	C4AZ-7D014-D
26211CA	Washer, C-4/C-5 Stator To Direct Drum W/Tangs (.089”) 1966-86	1	D0AZ-7D014-B
26211D	Washer, C-4/C-5 Stator To Direct Drum W/Out Tangs (.106”) 1966-86	1	C4AZ-7D014-E
26211DA	Washer, C-4/C-5 Stator To Direct Drum W/Tangs (.106”) 1966-86	1	D0AZ-7D014-C
26211EA	Washer, C-4/C-5 Stator To Direct Drum W/Tangs (.123”) 1966-86	1	D0AZ-7D014-D
26211GA	Washer, C-4/C-5 Stator To Direct Drum W/Tangs (.140”) 1966-86	1	D0AZ-7D014-K
26211K	Washer Kit, C-4 Stator To Direct Drum W/Out Tangs 1964-66	1	
26211AK	Washer Kit, C-4 Stator To Direct Drum W/Tangs 1967-Up	1	
26229	Washer, C-4/C-5 Stator To Forward Drum #1 (.042”) 1964-86	1	D0AZ-7D091-F
26229A	Washer, C-4/C-5 Stator To Forward Drum #2 (.057”) 1964-86	1	D0AZ-7D091-B
26229B	Washer, C-4/C-5 Stator To Forward Drum #3 (.074”) 1964-86	1	D0AZ-7D091-C
26229C	Washer, C-4/C-5 Stator To Forward Drum #4 (.091”) 1964-86	1	D0AZ-7D091-J
26229D	Washer, C-4/C-5 Stator To Forward Drum #5 (.108”) 1964-86	1	D0AZ-7D091-K
26229K	Washer Kit, C-4/C-5 Stator To Forward Drum 1964-86	1	
26232	Washer, C-4 Forward Drum To Clutch Hub (7 Tabs & 4 Rectangle Holes) 1964-69	1	C4AZ-7D090-A
26232A	Washer, C-4/C-5 Forward Drum To Clutch Hub (6 Tabs & 3 Round Holes) 1970-86	1	D0AZ-7D090-A
26235	Washer, C-4/C-5 Hub To Front Planet	1	C4AZ-7A242-A
26240	Race, C-4/C-5 Front Planet To Sun Gear (Front) Stays In Planet	1	
26241	Bearing, C-4/C-5 Front Planet To Sun Gear (Stays In Planet)	1	
26242	Race, C-4/C-5 Front Planet To Sun Gear (Rear)	1	
26243	Race, C-4/C-5 Input Shell To Rear Planet	1	
26244	Washer, C-4 Input Shell To Rear Planet 1964-71 (Use 26235)	1	C4AZ-7A242-A
26244B	Washer, C-4/C-5 Shell To Rear Planet (3 Tabs)(2.150”ID) 1972-86	1	D2OZ-7A242-A
26251	Washer, C-4 Rear Planet To Rear Hub & Rear Hub To Reverse Drum (3 Inner Tabs)(2.050”ID) (Can Use 26251A) 1964-79	2	C4AZ-7C096-A
26251A	Washer, C-4/C-5 Rear Planet To Rear Hub To Rear Hub To Reverse Drum (3 Outer Tabs) (2.050”ID) 1980-86 (Can Use 26251)	2	E0AZ-7C096-B

© Whatever It Takes Transmission Parts. Inc.

26257	Washer, C-4/C-5 Rear Sprag Inner Race To Case (2 Wide ID Tabs & 2 ID Cut-Outs) 1964-69 (Can Use 26257A)	1	E0AZ-7D072-A
26257A	Washer, C-4/C-5 Rear Sprag Inner Race To Case (2 Narrow ID Tabs & No Cut-Outs) 1970-86	1	
26263	Washer, C-4/C-5 Case To Parking Gear (Steel)(With 3 Outer Notches)(1.215"ID) 1964-86	1	C4AZ-7B368-A

PART #	GASKETS & RUBBER COMPONENTS	QTY.	REFERENCE #
26300	Gasket, C-4/C-5 Bottom Pan 1964-86 (Cork)	1	
26300F	Gasket, C-4/C-5 Bottom Pan 1964-86 (Farpak)	1	
26305	Gasket, C-4/C-5 Extention Housing 1964-86	1	C4AZ-7B442-C
26305A	Gasket, Extention Housing Bronco 4x4	1	
26307	Gasket, C-4/C-5 Front Servo Cover 1964-86	1	C4AZ-7D026-C3
26310	Gasket, C-4/C-5 Pump 1964-86	1	E1AZ-7A136-A
26311	O-Ring, C-4 Pump 1964-65	1	376950-S
26320	Gasket, C-4 Valve Body 1964	1	C5AZ-7D100-B
26320A	Gasket, C-4 Valve Body 1965-66	1	
26320AA	Gasket, C-4 Valve Body 1967-69	1	
26320B	Gasket, C-4 Valve Body (In Line 6 Cylinder & V6) 1970-83	1	D4OP-7D100-A
26320BA	Gasket, C-4 Valve Body (4 Cylinder & V6) 1970-83	1	D7FZ-7D100-A
26320E	Gasket, C-5 Valve Body 1982-86	1	E3DZ-7D100-A
26322	Gasket, C-5 3-2 Timing Body Seperator 1982-86	1	E2DZ-7F497-A
26326	Gasket, C-4 Filter (Paper) 1973-83	1	D3BZ-7E062-A
26327	Gasket, C-4 Modulator To Case (Screw In Type Modulator)	1	C2AP-7B426-A
26334	O-Ring, C-4 Forward Clutch Piston Inner 1964-69	1	B5AZ-7A294-E
26334A	O-Ring, C-4/C-5 Forward Clutch Piston Inner 1970-86	1	D0AZ-7A294-A
26335	Lathe Cut Seal, C-4 Forward Clutch Piston Outer 1964-78	1	C4AZ-7A548-C
26335A	Lip Seal, C-4/C-5 Forward Clutch Piston Outer 1978-86	1	D8OZ-7A548-A
26336	O-Ring, C-4 Direct Clutch Piston (Inner) 1964-67	1	B5AZ-7A294-E
26336A	Lathe Cut Seal, C-4 Direct Clutch Piston (Inner) 1968-69	1	C8AZ-7D404-B
26336B	Lathe Cut Seal, C-4/C-5 Direct Clutch Piston (Inner) 1970-86	1	D0AP-7D404-A
26337	Lathe Cut Seal, C-4 Direct Clutch Piston (Outer) 1964-5/81	1	C8AZ-7A548-B
26337A	Lip Seal, C-4/C-5 Direct Clutch Piston (Outer) 6/81-1986	1	E1AZ-7A548-A
26346	O-Ring, C-4/C-5 Modulator (Use 36349)	2	1P-77265-B
36349	O-Ring, C-4/C-5 Detent & Modulator	2	386078-S
26361	Seal, C-4 Intermediate Servo	1	
26361A	Lathe Cut Seal, C-4 Intermediate Servo (Small 1.823"ID) 1965-70	1	C5ZZ-7D025-A
26361AA	Lathe Cut Seal, C-4 Intermediate Servo (Small 1.945"ID) 1965-74	1	C5DZ-7D025-A
26361AB	Lathe Cut Seal, C-4 Intermediate Servo (Small 2.060"ID) 1964-77	1	C4DZ-7D025-A
26361AC	Lathe Cut Seal, C-4 Intermediate Servo (Small 2.271"ID) 1964-83	1	D9FZ-7D025-A
26361AD	O-Ring, C-5 Intermediate Servo (Small 2.237"ID) 1982-86	1	E2SZ-7D025-A
26361AE	O-Ring, C-5 Intermediate Servo (Small 2.362"ID) 1982-86	1	E2DZ-7D025-A
26361AG	Lathe Cut Seal, C-4 Intermediate Servo (Small 2.381"ID) 1964-83	1	D9AZ-7D025-A
26361AH	Lathe Cut Seal, C-4 Intermediate Servo (Small 2.505"ID) 1964-83	1	D5TZ-7D025-A
26361AJ	O-Ring, C-5 Intermediate Servo (Small 2.550"ID) 1982-86	1	E1AZ-7D025-A
26361AK	O-Ring, C-5 Intermediate Servo (Small 2.612"ID) 1982-86	1	E1AZ-7D025-B
26361AL	Lathe Cut Seal, C-4 Intermediate Servo (Small 2.687"ID) 1965-68	1	C5AZ-7D025-A
26361AM	Lathe Cut Seal, C-4 Intermediate Servo (Small 3.060"ID) 1965-68	1	
26361B	Lathe Cut Seal, C-4 Intermediate Servo (Large 2.807"ID) 1970-77	1	D0AZ-7D024-A
26361BA	Lathe Cut Seal, C-4 Intermediate Servo (Large 2.867"ID) 1972-83	1	D2DZ-7D024-A
26361BB	Lathe Cut Seal, C-4 Intermediate Servo (Large 3.390"ID) 1964-83	1	D5TZ-7D024-A
26361BC	O-Ring, C-5 Intermediate Servo (Large) (3.487"ID) 1982-86	1	E1AZ-7D024-A
26364	Lathe Cut Seal, C-4/C-5 Reverse Servo Cover 1964-86	1	D0AZ-7D040-A
103368	O-Ring, C-4/C-5 Speed-O Housing	1	87036594
44371A	O-Ring, C-4/C-5 Filler Tube	1	6264902
26378	O-Ring, C-4/C-5 Cooler Lines & Fittings	4	38892-S94
26385	Hockey Puck, C-4/C-5 Intermediate Accumulator Check Valve Seal (Rubber) 1964-86	1	D9AZ-7D376-A
56385	Orifice Puck, C-5 Intermediate Accumulator Check Valve Seal (White Plastic) 1982-86	1	
26390	External Seal Kit, C-4/C-5 W/Pan Gasket 1966-86	1	

PART #	TECHNICAL MANUALS	QTY.	REFERENCE #
26400	Technical Manual, C-4/C-5	1	83-C5TM

PART #	ELECTRICAL COMPONENTS	QTY.	REFERENCE #
26410	Switch, C-4 Neutral Safety (With 1 Round 4 Blade Connector)	1	E2DZ-7A347A
26410C	Switch, C-4 Neutral Safety (With 2 Flat 1 Pin/1Hole Connector)(These Are For Australia/New Zealand)	1	
26414	Switch, C-4 Spark Control	1	D2AZ-7E440-A

© Whatever It Takes Transmission Parts. Inc.

PART #	MISC. COMPONENTS	QTY.	REFERENCE #
26487	Grommet, C-4/C-5 Linkage Grommet 5/16”ID	1	D4AZ-7341-A
26487A	Grommet, C-4/C-5 Linkage Grommet 5/8”ID	1	
26487B	Grommet, Ford Passing Gear (Narrow Groove) (Green)	1	E0AZ-7F330-A
26487BA	Grommet, Ford Passing Gear (Wide Groove) (Black)	1	
26487BW	Grommet, Ford Passing Gear (Narrow Groove) (Yellow Or Black)	1	
26487C	E-Clip, C-4/C-5	1	
T26494-1	Filler Tube Repair End, Ford O-Ring Filler Tube (Teckpak)	1	

PART #	HARD PARTS	QTY.	REFERENCE #
26500	Pump, C-4 (O-Ring Type) (Uses A No Tang Washer #211) 1964-66	1	C4AZ-7A103-G
26500A	Pump, C-4 (Uses A Washer #211 With Tangs) 1967-69	1	
26500B	Pump, C-4 1970-77 (Can Use 26500C If Customer Has The Wide Rings # 26181B)	1	D0AZ-7A103-A
26500C	Pump, C-4 1978-83	1	D7AZ-7A103-A
26500D	Pump, C-5 Lock-Up 1982-86	1	E2SZ-7A103-A
26510	Pump Body W/Gears, C-4 (O-Ring Type) 1964-66	1	
26510A	Pump Body W/Gears, C-4/C-5 (W/Out O-Ring) 1966-86	1	
26520	Stator, C-4 (Uses A Washer #211 With No Tangs) 1964-66 (Uses .790”ID Bushings & .093” Wide Rings #181)	1	
26520A	Stator, C-4 (Uses A Washer #211 With Tangs) 1966-69 (Uses .790”ID Bushings & .093” Wide Rings #181)	1	D0AZ-7A108-A
26520AA	Stator, C-4 1970-77 (Uses .845” Wide Bushings & .093” Wide Rings #181)	1	
26520B	Stator, C-4 (W/Spring) 1978-83 (Uses .845”ID Bushings ^ .123” Wide Rings #181)	1	D7AZ-7A108-A
26520C	Stator, C-5 (W/Out Spring) 1982-86 (Uses .845” ID Bushings & .123” Wide Rings #181)	1	E2SZ-7A208-A
26530	Pump Gears, C-4/C-5	1	C4AZ-7C010-F
26530X	Pump Gears, C-4/C-5 (Oversized)	1	
26554	Drum, C-4 Forward (4 Clutch) (24 Spline) 1964-69	1	
26554A	Drum, C-4 Forward (5 Clutch) (24 Spline) 1964-69	1	
26554AC	Drum, C-4 Forward Clutch (5 Clutch) (26 Spline) 1970 Only	1	D0AZ-7A360-A
26554AE	Drum, C-4 Forward Clutch (5 Clutch) (24 Spline) 1971-80	1	D8OZ-7A360-A
26554B	Drum, C-4/C-5 Forward Clutch (5 Clutch) (24 Spline) 1981-86	1	E1DZ-7A360-A
26555A	Drum, C-4 Direct Clutch (4 Clutch) (2 7/16” Tall) 1964 Only	1	
26555AA	Drum, C-4 Direct Clutch (4 Clutch) (2 11/16” Tall) 1964-69	1	
26555B	Drum, C-4 Direct Clutch (4 Clutch) 1970-81	1	
26555C	Drum, C-5 Direct Clutch (3 Clutch) 1982-86	1	
26556	Drum, C-4/C-5 Reverse (Rear Band Drum) 1964-86	1	
26564	Piston Kit, C-4 Forward Clutch (2.250”ID) (Cast #C4-AP) 1964-69	1	
26564A	Piston Kit, C-4/C-5 Forward Clutch (2.300”ID) (Cast #RF-DO) 1970-Up	1	
26565	Piston Kit, C-4 Direct Clutch (1 Spring Type) 1970-83	1	
26565A	Piston Kit, C-5 Direct Clutch (1 Spring Type) 1982-86	1	
26565AA	Piston Kit, C-4 Direct Clutch (10 Spring Type) 1964-69	1	
26574	Hub, C-4 Forward Clutch (W/Out Bushing) 1964	1	
26574A	Clutch Hub, C-4 Forward Clutch 1965-80	1	
26574B	Hub, C-4/C-5 Forward Clutch 1981-86	1	
26582	Planet, C-4 Front (Uses A 3 Piece Bearing Inside) 1964-83	1	
26582A	Planet, C-5 Front (Uses A 1 Piece Bearing Inside) 1982-86	1	
26584	Planet, C-4/C-5 Rear 1964-86	1	
26592	Ring Gear, C-4/C-5 Front & Rear Planet 1964-86	2	
26604	Hub, C-4/C-5 Output Shaft 1964-86	1	
26612	Sun Gear, C-4 W/Small Lube Holes 1964-80	1	
26612A	Sun Gear, C-4/C-5 W/large Lube Holes 1981-86	1	
26622	Shell, C-4/C-5 Primary Sun Gear 1965-86	1	

PART #	SPRAGS & ONE WAY CLUTCHES	QTY.	REFERENCE #
26654K	Sprag Kit, C-4 Spring & Roller Kit 1964-81	1	C4AZ-7D098-A
26654AK	Sprag Kit, C-5 Spring & Roller Kit 1982-86	1	

PART #	HARD PARTS (Continued)	QTY.	REFERENCE #
26664	Inner Race, C-4 Sprag 1964-73	1	
26664A	Inner Race, C-4/C-5 Sprag 1974-86	1	
26665	Outer Race, C-4 Sprag 1964-E73	1	
26665A	Outer Race, C-4/C-5 Sprag L1973-86	1	
26670	Input Shaft, C-4 (24 & 24 Spline) 1964-69	1	
26670A	Input Shaft, C-4 (26 & 26 Spline) 1970 Only	1	
26670B	Input Shaft, C-4/C-5 (26 & 24 Spline) 1974-86	1	

© Whatever It Takes Transmission Parts. Inc.

26678	Output Shaft, C-4/C-5 2WD (7 Teeth Speed-O Gear)	1
26678A	Output Shaft, C-4/C-5 2WD (8 Teeth Speed-O Gear)	1
26678AB	Output Shaft, C-4/C-5 (8 Teeth Speed-O Gear) 1965-Up	1
26678B	Output Shaft, C-4/C-5 (9 Teeth Speed-O Gear) 1965-Up	1
26678C	Output Shaft, C-4/C-5 (Bolt On Yoke Type)	1
26678D	Output Shaft, C-4 4x4 (12” Long)	1
26678E	Output Shaft, C-4/C-5 4x4 (13 1/4” Long)	1
26680	Governor, C-4 1964-72	1
26680A	Governor, C-4 (Orange Ink Identification) 1973-83	1
26680B	Governor, C-5 (Pink/Black Ink Identification)	1
26685	Support, C-4/C-5 Governor	1
26690	Gear, C-4/C-5 Parking	1
26697	Oil Distribution Sleeve, C-4/C-5 1970-86	1
26740	Valve Body, C-4 (8 Bolt) 1965-66 (Detents On Manual Valve)	1
26740A	Valve Body, C-4 (9 Bolt) 1970-83	1
26740B	Valve Body, C-4 (9 Bolt) Pinto 1973-83	1
26740C	Valve Body, C-5 Lock-Up 1982-86	1
26740D	Valve Body, C-4 (8 Bolt) 1967-69 (Detents On Manual Valve)	1
26740E	Valve Body, C-4 (8 Bolt) 1970 (W/Slider Manual Valve)	1

PART #	VALVE BODY COMPONENTS	QTY.	REFERENCE #
26741-1K	Check Valve & Spring, C-4 (Under Filter)	1	D5AZ-7E368-A
S26741TK	Boost Valve & Sleeve, C-4/C-5 (Hi-Performance) (Sonnax)	1	
A26741V-5	Check Ball, C-4/C-5 Valve Body (.212”)(Rubber)	AR	
26746	Plate, C-5 Lock-Up 1982-86	1	
26747	Plate, C-4 Valve Body Seperator 1970-83	1	

PART #	HARD PARTS (Continued)	QTY.	REFERENCE #
26750AC	Bell Housing, C-4 (4 Cylinder) Top Bolts 5 1/8” (3 Bolt Starter) Bolts To Pump	1	
26750AD	Bell Housing, C-4 (4 Cylinder) Top Bolts 4 3/4” (3 Bolt Starter At 11:00) Cast #D8BP 7976AA (Bolts To Pump)	1	
26750BD	Bell Housing, C-4 (V-6) Top Bolts 3 1/2” (Bolts To Pump)	1	
26750CA	Bell Housing, C-4 (302) With 10 3/4” Converter (W/Out Cable Mount Holes) Bolts To Pump	1	
26750CB	Bell Housing, C-4 (302) With 11 3/4” Converter (W/Cable Mount Holes) Bolts To Pump	1	
26750CC	Bell Housing, C-4 (302) With 12 3/4” Converter (W/Cable Mount Holes) Bolts To Pump	1	
26750CD	Bell Housing, C-4 (302) With 12 3/4” Converter (W/Out Cable Mount Holes) Bolts To Pump	1	
26750CE	Bell Housing, C-4 (302) With 12 3/4” Converter (W/Cable Mount Holes) Bolts To Case	1	
26750CF	Bell Housing, C-4 (302) With 12 3/4” Converter (W/Out Cable Mount Holes) Bolts To Case	1	
26750D	Bell Housing, C-4 (460 Big Block) Bolts To Case	1	
26750EA	Bell Housing, C-5 (Top Bolts 5”) (W/Cable Mount Holes) Bolts To Pump 1982-86	1	
26750EB	Bell Housing, C-5 (Top Bolts 5”) (W/Out Cable Mount Holes) Bolts To Pump 1982-86	1	
26750EC	Bell Housing, C-5 (Top Bolts 5”) (With Cable Mount Holes) Bolts To Case 1982-86	1	
26750EG	Bell Housing, C-5 (Top Bolts 7”) Bolts To Pump 1982-86	1	
26760	Case, C-4 (Screw In Modulator) Bell Bolts To Pump 1964-66 (Uses A Pump Body With O-Ring)	1	
26760A	Case, C-4 (Screw In Modulator) Bell Bolts To Pump 1966-72 (Uses A Pump Body With No O-Ring)	1	
26760AC	Case, C-4 Screw In Modulator) Bell Bolts To Case 1966-72 (Humpback Case) (Uses A Pump Body With No O-ring)	1	
26760B	Case, C-4 (Push In Modulator) Bell Bolts To Pump 1972-83	1	
26760C	Case, C-4 (Push In Modulator) Bell Bolts To Case 1972-83 (Humpback Case)	1	
26760D	Case, C-4/C-5 (Push In Modulator) Bell Bolts To Pump 1982-86 (Fine Thread Band Adjustment)	1	
26760E	Case, C-4/C-5 (Push In Modulator) Bell Bolts To Case 1982-86 (Fine Thread Band Adjustment)	1	
26765	Pan, C-4 2WD (Less Filler Tube) (Filler Tube Screws Into Pan)	1	
26765A	Pan, C-4 2WD (1.175” Deep At The Shallow End) (Filler Tube Is In The Case)	1	
26765AA	Pan, C-4 2WD (.785” Deep At The Shallow End)(Filler Tube Is In The Case)	1	
26765B	Pan, C-5 Lock-Up 2WD (1.900” Deep At The Shallow End) 1982-86	1	
26765C	Pan, C-4 4x4 (Has Filler Tube In Case) Flat Bottom	1	
26765D	Pan, C-4 4x4 (W/Hump) (Filler Tube Is In The Case)	1	
26770	Extension Housing, C-4/C-5 2WD (Car) W/Vent 1970-Up	1	
26770A	Extension Housing, C-4/C-5 (Truck, Bolt-On Type Yoke) 1970-86	1	
26770B	Extension Houisng, C-4/C-5 4x4 (6 3/4” Aluminum)	1	
26770C	Extension Houisng, C-4 2WD (No Vent) 1964-69	1	
26775	Converter Nut, C-4/C-5 Flange Type	4	
26775A	Converter Nut, C-4/C-5 Self Locking	4	
26775C	Converter Plug, C-4/C-5 Allen Head	1	
26775D	Converter Plug, C-4/C-5 7/16” Hex Head	1	

© Whatever It Takes Transmission Parts. Inc.

PART #	HARD PARTS (Continued)	QTY.	REFERENCE #
S36779	Pan Bolt, C-4 (Sonnax)	AR	
26797	Nut, C-4/C-5 Holds On Detent Lever	1	
26843	Bracket, C-4/C-5 Modulator	1	
26877	Snap Ring, C-4/C-5 Holds Forward Clutch Return Spring In (.082” Thick)(5”OD)	1	
26878	Snap Ring, C-4/C-5 Forward & Direct Clutch (.060”-.066”)	1	
26878-1	Snap Ring, C-4/C-5 Forward & Direct Clutch (.052” Thick)(Alto)	1	
26878A	Snap Ring, C-4/C-5 Forward & Direct Clutch (.070”-.080”)	1	
26878B	Snap Ring, C-4/C-5 Forward & Direct Clutch (.088”-.094”)	1	
26878C	Snap Ring, C-4/C-5 Forward & Direct Clutch (.102”-.106”)	1	
26879	Snap Ring, C-4/C-5 Holds Direct Clutch Retainer In	1	
26881	Snap Ring, C-4/C-5 Holds Forward Clutch Hub To Front Ring Gear & Gear	2	
26884	Snap Ring, C-4/C-5 Holds Bowl To Sun Gear	1	
26894	Snap Ring, C-4/C-5 Holds Rear Hub To Output Shaft (Wire Type) (Can Use 26895)	1	
26895	Snap Ring, C-4/C-5 Holds Governor Support To Output Shaft (.050” Thick With 2 Eyelets)	1	
26905	Servo Assembly, C-4/C-5 Intermediate	1	
S26905AA	Servo Assembly. C-4/C-5 Intermediate (Shelby Hi-Performance) Sonnax (Purple Anodized Cover)	1	
S26905AB	Servo Assembly, C-4/C-5 Intermediate (Shelby Hi-Performance) Sonnax (Non-Anodized Cover)	1	
26906	Spring, C-4/C-5 Intermediate Servo Return	1	
26907	Piston, C-4/C-5 Intermediate Servo	1	
26909	Cover, C-4/C-5 Intermediate Servo	1	
26911	Spring, C-4/C-5 Reverse Servo	1	
26912	Piston, C-4/C-5 Reverse Servo	1	D1AZ-7D189-A
26914	Cover, C-4/C-5 Reverse (Rear) Servo	1	
26916	Strut Assembly, C-4/C-5 Intermediate Band	1	
26917	Strut Assembly, C-4/C-5 Reverse (Rear) Band	1	
26919	Bolt, C-4 Band Adjusting (Coarse Thread) 1964-81	1-2	
26919A	Bolt, C-4/C-5 Band Adjusting (Fine Thread) 1982-86	1-2	
26922	Nut, C-4 Band Adjustment (Coarse Thread) 1964-81	1-2	380850-S
26922A	Nut, C-4/C-5 Band Adjustment (Fine Thread) 1982-86	1-2	389049-S
26964	Piston, C-4/C-5 Forward Clutch	1	
26965	Piston, C-4/C-5 Direct Clutch	1	
26974	Spring, C-4/C-5 Forward Clutch Return	1	E1AZ-7B070-A
26975	Spring, C-4/C-5 Direct Clutch Return (10 Springs) 1964-69	1	
26975A	Spring, C-4/C-5 Direct Clutch Return (1 Spring) 1970-86	1	
26985	Retainer, C-4/C-5 Direct Clutch Spring	1	
26989	Retainer, C-4 Sprag (W/Out Springs) 1964-81	1	D8O7-7D191-A
26989A	Retainer, C-5 Sprag (With Snap On Springs) 1982-86	1	
26991	Linkage Assembly, C-4/C-5 Internal (Without Detent Spring) 1970-Up	1	
26991-1	Kickdown Lever, C-4 (Internal) 1970-Up	1	
26991A	Linkage Assembly, C-4 (Internal) 1964-69	1	
26991A-1	Kickdown Lever, C-4 (Internal) 1964-69	1	
26995	Park Pawl Assembly, C-4/C-5	1	
26996	Fitting, C-4/C-5 Cooler Line (90 Degree Elbow) (5/16” Line x 1/8” Pipe Thread) Screw In Flared	1	E2SZ-7D273-A
26996A	Fitting, C-4/C-5 Cooler Line (Straight) (5/16” Line x 1/8” Pipe Thread) Screw In Flared	1	
26997	Lever, C-4/C-5 Detent	1	
26999	Tube Set, C-4/C-5 Oil	1	

FORD

© Whatever It Takes Transmission Parts. Inc.

© Whatever It Takes Transmission Parts. Inc.

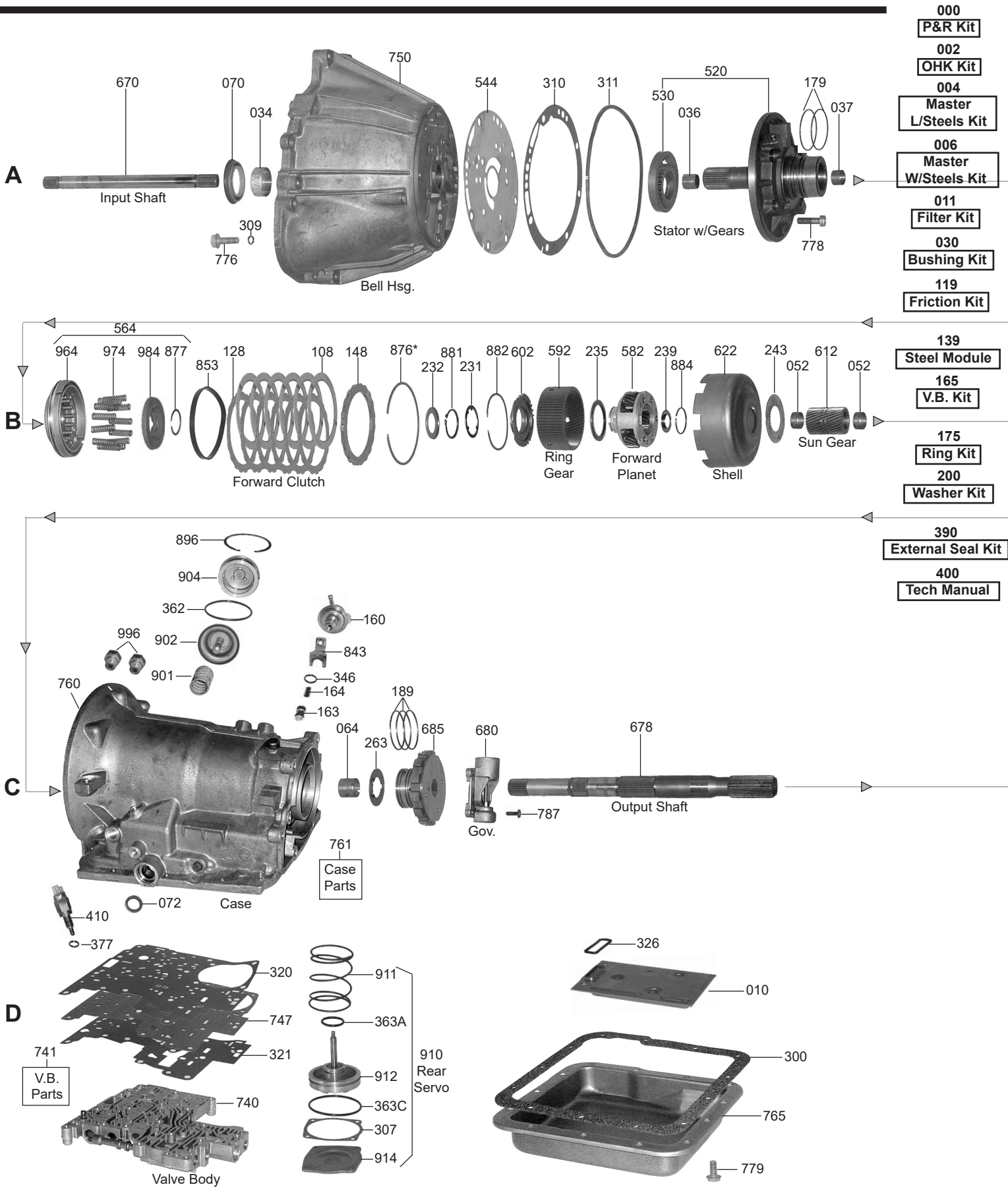

000 P&R Kit
002 OHK Kit
004 Master L/Steels Kit
006 Master W/Steels Kit
011 Filter Kit
030 Bushing Kit
119 Friction Kit
139 Steel Module
165 V.B. Kit
175 Ring Kit
200 Washer Kit
390 External Seal Kit
400 Tech Manual

FORD

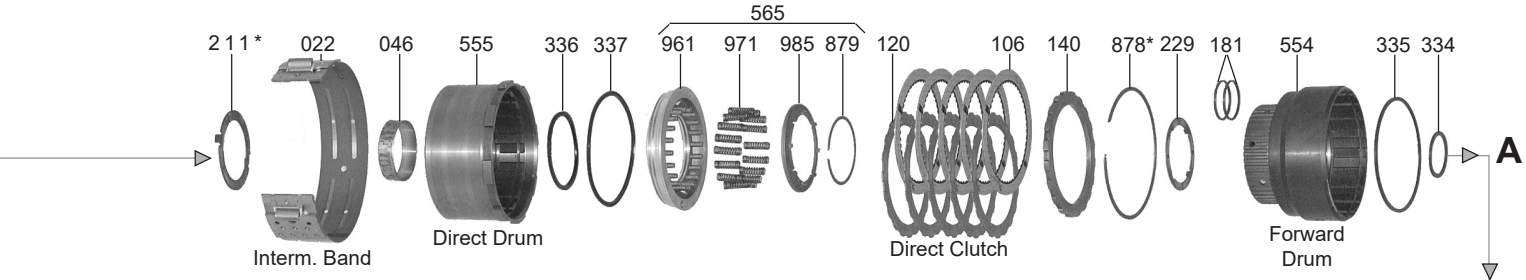

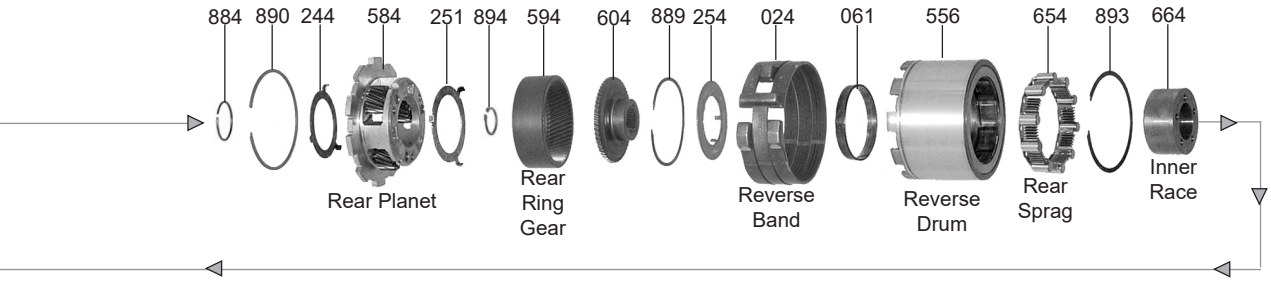

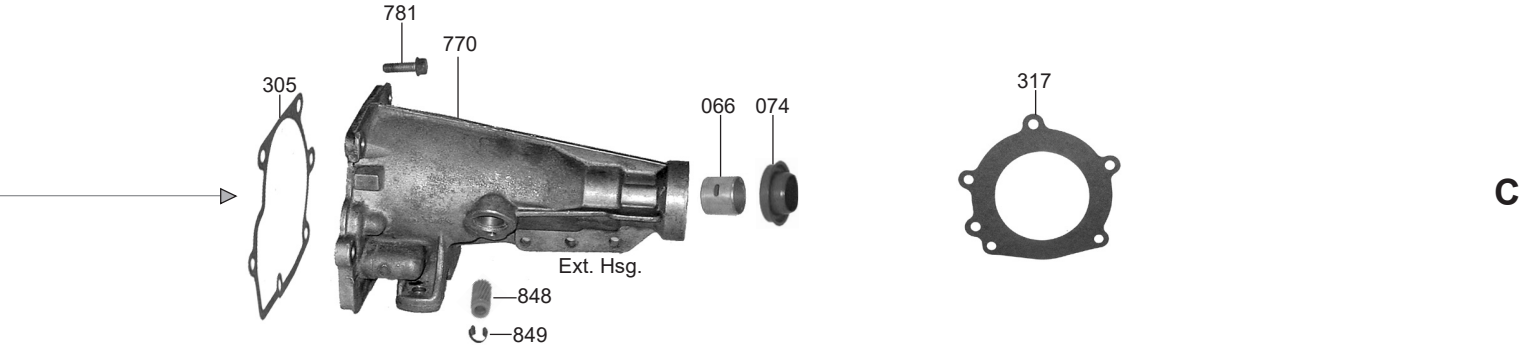

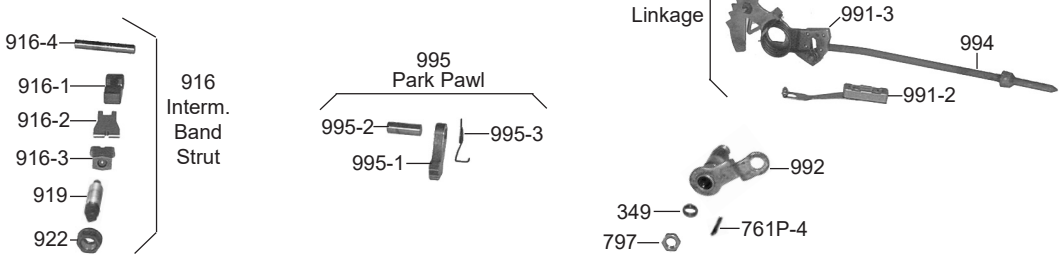

FORD

© Whatever It Takes Transmission Parts. Inc.

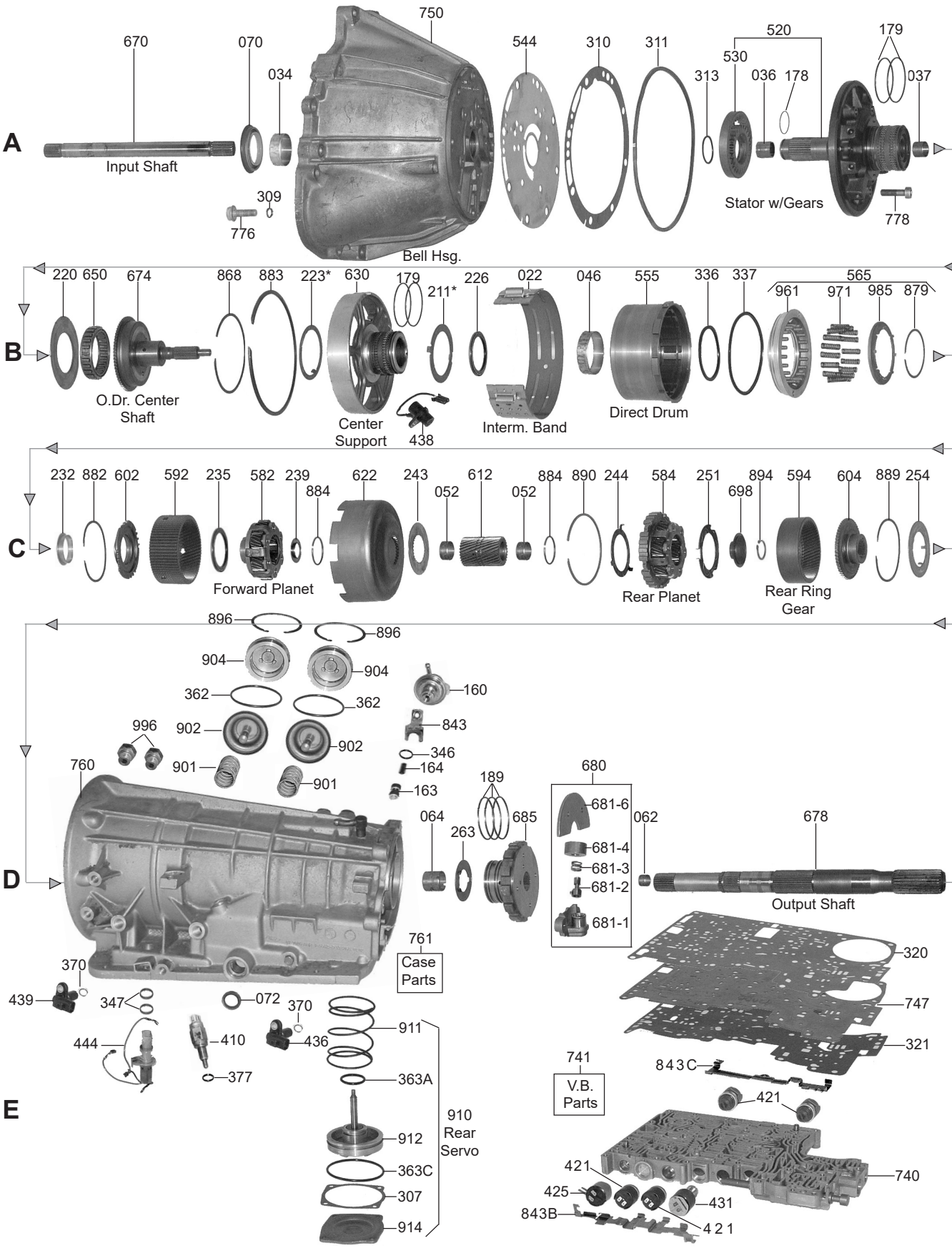

000 P&R Kits

002 Overhaul Kits

004 Master L/ Steels Kit

006 Master W/ Steels Kit

011 Filter Kits

030 Bushing Kits

119 Friction Module

139 Steel Module

165 Valve Body Kits

175 Ring Kits

200 Washer Kits

390 External Seal Kits

400 Technical Manuals

© Whatever It Takes Transmission Parts. Inc.

A4LD / 4R44E / 4R55E / 5R55E

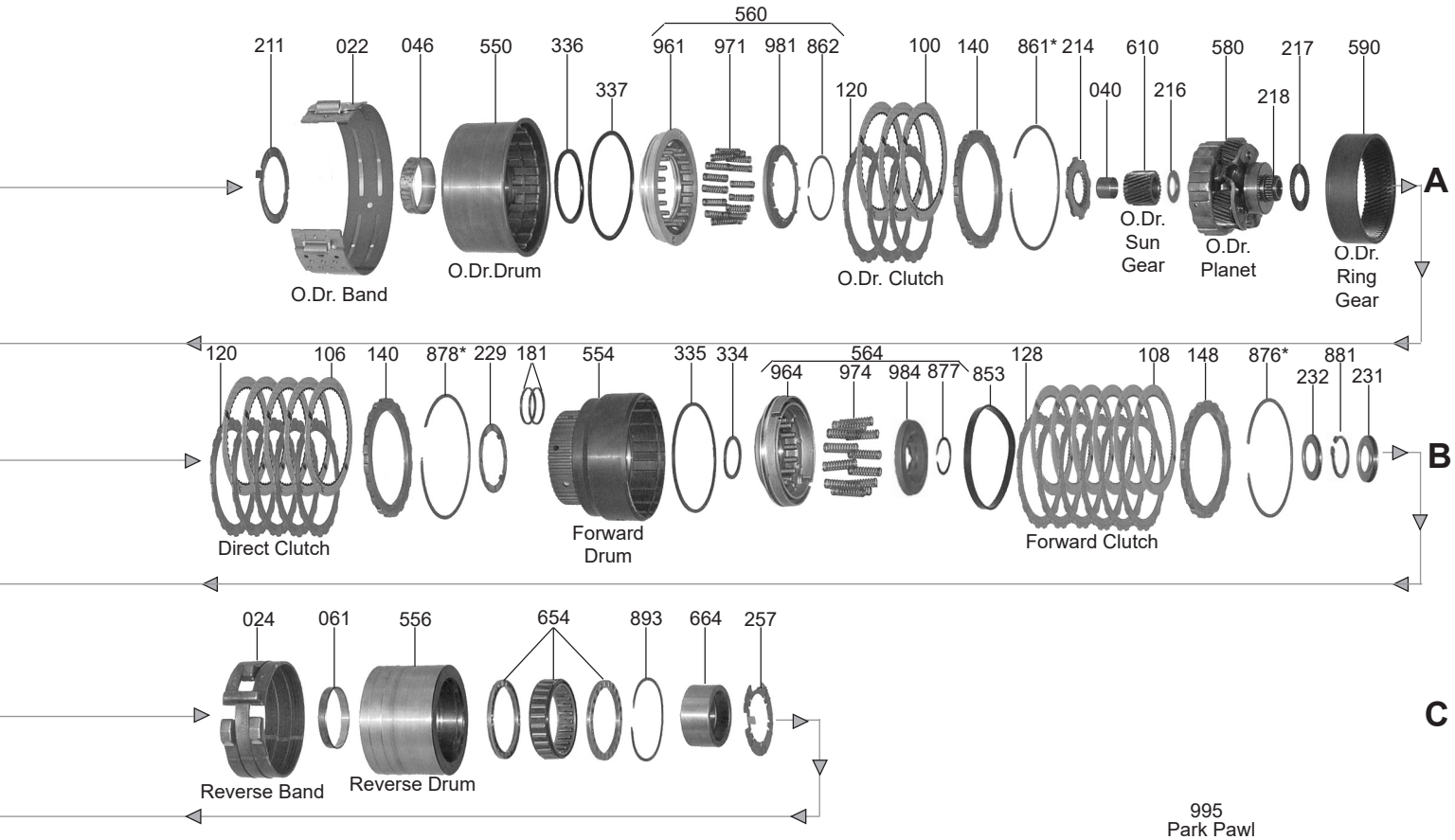

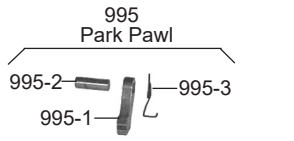

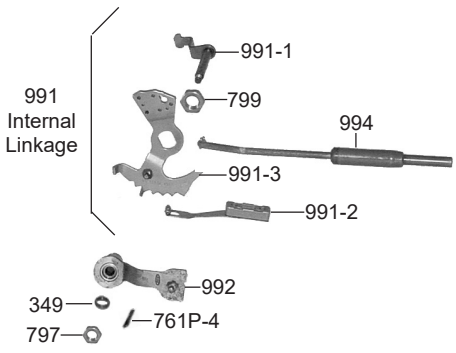

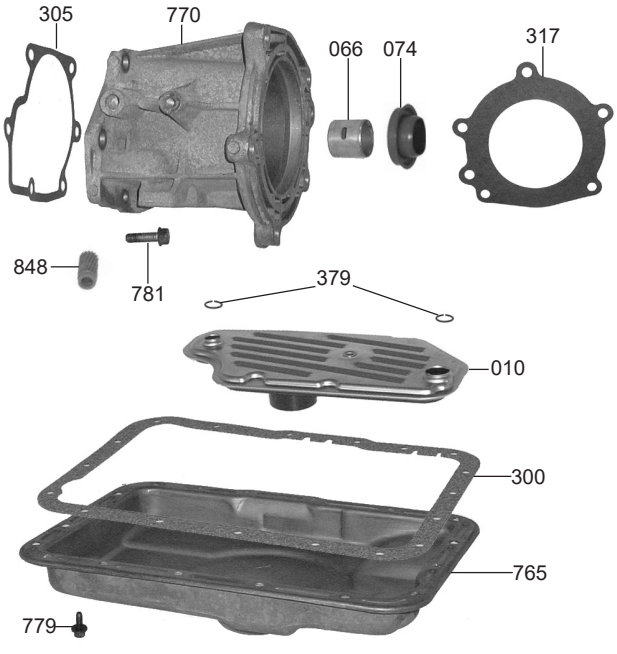

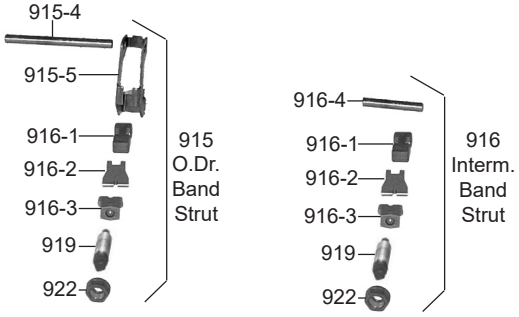

FORD

1-800-940-0197

© Whatever It Takes Transmission Parts. Inc.

PART #	PAPER & RUBBER KITS	QTY.	REFERENCE #
56000	Paper & Rubber Kit, C-3 1974-87	1	
56000E	Paper & Rubber Kit, A4LD 1985-95	1	
56000H	Paper & Rubber Kit, 4R44E/4R55E 1995-Up	1	

PART #	OVERHAUL KITS	QTY.	REFERENCE #
56002	Overhaul Kit, C-3 1974-87	1	
56002E	Overhaul Kit, A4LD 1985-95	1	
56002H	Overhaul Kit, 4R44E/4R55E 1995-96	1	
56002L	Overhaul Kit, 4R44E/4R55E/5R55E 1997-Up	1	

PART #	MASTER L/STEELS KIT	QTY.	REFERENCE #
56004A	Master L/Steels Kit, C-3 1974-87	1	
56004E	Master L/Steels Kit, A4LD 1985-89	1	
56004G	Master L/Steels Kit, A4LD 1990-95	1	
56004H	Master L/Steels Kit, 4R44E/4R55E 1995-96	1	
56004L	Master L/Steels Kit, 4R44E/4R55E/5R55E 1997-Up	1	

PART #	MASTER W/STEELS KIT	QTY.	REFERENCE #
56006	Master W/Steels Kit, C-3 1974-E78	1	
56006A	Master W/Steels Kit, C-3 L1978-87	1	
56006E	Master W/Steels Kit, A4LD 1985-89	1	
56006G	Master W/Steels Kit, A4LD 1990-95	1	
56006H	Master W/Steels Kit, 4R44E/4R55E 1995-96	1	
56006L	Master W/Steels Kit, 4R44E/4R55E/5R55E 1997-Up	1	

PART #	FILTERS	QTY.	REFERENCE #
56010	Filter, C-3 1974-87	1	D4AZ-7A098-A
56010A	Filter, A4LD 2WD (OE Style) 1985	1	
56010AA	Filter, A4LD 4x4 (OE Style) 1985	1	
56010E	Filter, A4LD 2WD (1 Square & 1 Rectangle Pick Up (Flat) 1986-88 (Metal)	1	E6TZ-7A098-B
56010EA	Filter, A4LD 2WD (Round Pick-Up 1/4" Tall)(All Metal) 1986-96	1	
56010EB	Filter, A4LD 4x4 (Metal, With Rectangle Plastic Pick-Up 1 3/8" Tall) 1985-96	1	
56010G	Filter, A4LD/4R44E/4R55E/5R55E 4x4 (1/2 Meatl & 1/2 Plastic With Round Pick -Up 1 3/8" Tall) (Zero Leak) 1986-Up	1	E6TZ-7A098-A
56010H	Filter, A4LD/4R44E/4R55E/5R55E 2WD (1/2 Metal & 1/2 Plastic With Round Pick-Up (Flat) (Zero Leak) 1989-Up	1	E9TZ-7A098-C

PART #	FILTER KITS	QTY.	REFERENCE #
56011	Filter Kit, C-3 1974-87	1	
56011A	Filter Kit, A4LD 2WD (OE Style) 1985	1	
56011AA	Filter Kit, A4LD 4x4 (OE Style) 1985	1	
56011E	Filter Kit, A4LD 2WD 1986-88	1	
56011G	Filter Kit, A4LD/4R44E/4R55E/5R55E 4x4 (Zero Leak) 1986-Up	1	
56011H	Filter Kit, A4LD/4R44E/4R55E/5R55E 2WD (Zero Leak) 1989-Up	1	

PART #	MISCELLANEOUS FILTERS	QTY.	REFERENCE #
56016	Screen, A4LD TCC Solenoid	1	E8TZ-7N113-B

PART #	BANDS	QTY.	REFERENCE #
56022	Band, C-3 Intermediate Flex 1974-84	1	
56022E	Band, C-3/A4LD/4R44E/4R55E/5R55E/5R55N Intermediate & Overdrive Flex 1985-Up	1-2	E6TZ-7D034-A
56022EA	Band, A4LD Intermediate (4.0L) Double Wrap 1991-92	1	F0TZ-7F196-A
56024	Band, C-3/A4LD/4R44E/4R55E/5R55E Reverse	1	E3ZZ-7D095-A

PART #	BUSHINGS	QTY.	REFERENCE #
56030	Bushing Kit, C-3	1	
56030D	Bushing Kit, A4LD/4R44E/4R55E (W/Stamped Steel Direct Drum) 1990-Up	1	
56030DA	Bushing Kit, 4R44E/55E/5R55E 1997-Up (Enhanced W/ CT-101 Dry Lubricant W/Indents For Better Oil Retention)	1	
56030E	Bushing Kit, A4LD/4R44E/4R55E (W/Cast Iron Or Steel Direct Drum) 1985-Up	1	

© Whatever It Takes Transmission Parts. Inc.

56034	Bushing, C-3/A4LD/4R44E/4R55E/5R55E Bell Housing / Pump (Babbit)	1	
56034B	Bushing, C-3/A4LD/4R44E/4R55E/5R55E Bell Housing / Pump (Bronze)	1	
56034D	Bushing, C-3/A4LD/4R44E/5R55E Bell Housing/Pump (Dry Lubricant) (Also Fits 5R55N/S/W Pump Cover)		
56036A	Bushing, C-3/A4LD/4R44E/4R55E/5R55E Stator (Front) W/Spiral ID Groove (Bronze) & Overdrive Sun Gear	1-2	
56036B	Bushing, A4LD/4R44E/4R55E/5R55E Stator (Front) W/Grooves On ID & OD (Bronze)	1	
56037	Bushing, C-3/A4LD/4R44E/4R55E/5R55E Stator (Rear)	1	
56037B	Bushing, C-3/A4LD/4R44E/4R55E Stator (Rear)(Bronze)(Also Fits 5R55N/S/W Stator (Rear))	1	
56040	Use 56036A	1	
56046	Bushing, C-3/A4LD Direct & Overdrive Clutch Drum (Cast Iron Drums)(2.360”OD) (Wide Grooves)	1	
56046B	Bushing, C-3/A4LD/4R44E/4R55E/5R55E Direct & Overdrive Drum (Stamped Steel Drum) (2.340”OD)(Narrow Grooves)	2	
56046BB	Bushing, C-3/A4LD/4R44E/4R55E 5R55E Direct & Overdrive Drum (Stamped Steel Drum) (2.340”OD)(Narrow Grooves)(Bronze)	2	
56052	Bushing, C-3/A4LD/4R44E Sun Gear	2	74DT-7D065-AA
56061	Bushing, C-3/A4LD/4R44E/4R55E Reverse Drum	1	
56061G	Caged Needle Bearing, 5R55E Reverse Drum 1997-Up (Use 56261)	1	
56062	Bushing, A4LD Output Shaft Pilot 1985-89	1	
56062A	Bearing, A4LD/4R44E/4R55E/5R55E Output Shaft Pilot 1990-Up (Use 56268)	1	
56064	Bushing, C-3/A4LD/4R44E/4R55E Case	1	
56064G	Use 16264A	1	
56066	Bushing, C-3/A4LD/4R44E/4R55E/5R55E Extension Housing (Babbit)	1	D7FZ-7A034-A
56066C	Bushing, C-3/A4LD/4R44E/4R55E /5R55E Extension Housing (Coated)	1	

PART #	METAL CLAD SEALS	QTY.	REFERENCE #
56070A	Seal, C-3/A4LD/4R44E/4R55E Front (W/Flange) 1985-Up (Viton, Deep Lip) Black Rubber (National)	1	E5TZ-7A248-A
56070B	Seal, C-3/A4LD/4R44E/4R55E/5R55E Front (No Flange) 1997-10 (Rubber Coated)	1	F77Z-7A248-AA
56070C	Seal, C-3/A4LD/4R44E/4R55E Front (W/Flange) 1997-Up (Viton, Deep Lip) Viton On OD Of Seal	1	
36072	Seal, C-3/A4LD/4R44E/4R55E/5R55E Linkage 1974-Up	1	D5AZ-7B498-A
56074	Seal, C-3/A4LD/4R44E/4R55E/5R55E Rear (W/Out Boot) 1974-Up	1	D5ZZ-7052-A
56074B	Seal, C-3/A4LD/4R44E/4R55E/5R55E Rear (With Boot) 1974-Up	1	E2ZZ-7052-A

PART #	FRICTION CLUTCH	QTY.	REFERENCE #
56100	Friction, A4LD Overdrive Clutch (.078”) 1985-89	2-3	E5TZ-7B164-A
56100A	Friction, A4LD/4R44E/4R55E Overdrive Clutch (.069”) 1990-Up	3	F0TZ-7B164-C
56100B	Friction, 4R44E/4R55E/5R55E Overdrive Clutch (.069”) (W/Directional Grooves) 1997-Up	3	F7ZZ-7B164-CA
56106	Friction, C-3/A4LD Direct Clutch (.075”) 1974-89	4-5	E3ZZ-7B164-B
56106A	Friction, A4LD/4R44E/4R55E Direct Clutch (.069”) 1990-Up	6	F0TZ-7B164-B
56106B	Friction, 4R44E/4R55E/5R55E Direct Clutch (.069”) (W/Directional Grooves) 1997-Up	6	F7ZZ-7B164-BA
56106PPK	Friction/Steel Kit, C-3/A4LD Direct Clutch (.075”) (Hi Performance) 1974-89	1	
56108	Friction, C-3/A4LD Forward Clutch (.075”) 1974-89	3-5	E3ZZ-7B164-A
56108A	Friction, A4LD/4R44E/4R55E Forward Clutch (.069”) 1990-Up	6	F0TZ-7B164-A
56108B	Friction, 4R44E/4R55E/5R55E Forward Clutch (.069”) (W/Directional Grooves) 1997-Up	6	F7ZZ-7B164-AA
56119E	Friction Module, A4LD 1985-89	1	
56119G	Friction Module, A4LD/4R44E/4R55E 1990-96	1	
56119H	Friction Module, 4R44E/4R55E/5R55E 1997-Up	1	

PART #	STEEL CLUTCH	QTY.	REFERENCE #
56120	Steel, C-3/5R55E Direct Clutch (.081”) 1974-Up	4-6	D4ZZ-7B442-B
56120A	Steel, A4LD Direct & Overdrive Clutch (.068”) 1985-89	7-8	D8ZZ-7B442-B
56120B	Steel, A4LD/4R44E/4R55E/5R55E Direct & Overdrive Clutch (.065”) 1990-Up	3-9	F0TZ-7B442-B
56120X	Steel, C-3/A4LD Direct Clutch (.098”) (Oversized)	AR	
56128	Steel, C-3 Forward Clutch (.078”) 1974-78	3-5	D4ZZ-7B442-A
56128A	Steel, C-3/A4LD Forward Clutch (.068”) 1978-89	3-5	D8ZZ-7B442-A
56128C	Steel, A4LD/4R44E/4R55E/5R55E Forward Clutch (.065”) 1990-Up	5-6	F0TZ-7B442-A
56128X	Steel, C-3/A4LD Forward Clutch (.098”) (Oversized)	AR	
56139	Steel Module, C-3 1974-E78	1	
56139A	Steel Module, C-3 L1978-87	1	
56139E	Steel Module, A4LD 1985-89	1	
56139G	Steel Module, A4LD/4R44E/4R55E 1990-Up	1	
56139H	Steel, Module, 5R55E 1997-Up	1	

© Whatever It Takes Transmission Parts. Inc.

PART #	CLUTCH PRESSURE PLATES	QTY.	REFERENCE #
56140	Pressure Plate, C-3/A4LD Direct & Overdrive Clutch (.218") 1974-89	1-2	D4ZZ-7B066-B
56140B	Pressure Plate, A4LD/4R44E/4R55E/5R55E Direct & Overdrive Clutch (.200") 1990-Up	1-2	F0TZ-7B066-B
56148	Pressure Plate, C-3/A4LD Forward Clutch 1974-89	1	D4ZZ-7B066-A
56148D	Pressure Plate, A4LD/4R44E/4R55E/5R55E Forward Clutch 1990-Up	1	F0TZ-7B066-A

PART #	MODULATORS	QTY.	REFERENCE #
56160	Modulator, C-3 No Stripe (Single Line) 1974-80	1	D6ZZ-7A377-A
56160A	Modulator, C-3 Black Stripe (Single Line) 4 Cylinder 1981-87	1	E1ZZ-7A377-B
56160B	Modulator, C-3 Green Stripe (Single Line) 6 Cylinder 1980-87	1	E1SZ-7A377-B
56160D	Modulator, C-3 No Stripe (Dual Line) 1974-76	1	
56160E	Modulator, A4LD No Stripe (Single Line) 1985-94	1	E5TZ-7A377-B
56160EA	Modulator, A4LD No Stripe (Single Line) With Modojust Dial 1985-92	1	E5TZ-7A377-B
56160T	Modulator, A4LD No Stripe (Single Line) With Turbo .	1	EASZ-7A377-A
56163	Valve, C-3/A4LD Under Modulator	1	
56164	Pin, C-3/A4LD Modulator (1 1/4" Long)	1	

PART #	VALVE BODY KITS	QTY.	REFERENCE #
T56165	Shift Kit, C-3 1974-Up	1	SK® C3
S56165E	Valve Body Kit, A4LD	1	KA4LD
S56165EK	Valve Body Kit, A4LD W/Boost Valve & Sleeve	1	KA4LD-V
S56165H	Valve Body Kit, 4R44E/4R55E/5R55E 1994-2001	1	K4R/5R55E
T56165H	Shift Kit, 4R44E/4R55E/5R55E 1994-2001	1	SK® 44-55E
T56167E	Shift Kit, A4LD Junior 1985-94	1	SK® A4LD-Jr

PART #	OIL SEALING RINGS	QTY.	REFERENCE #
56175	Ring Kit, C-3 1974-87	1	
56175E	Ring Kit, A4LD/4R44E/4R55E (W/Metal Governor Rings) 1985-94	1	
56175G	Ring Kit, A4LD/4R44E/4R55E (W/Viton Governor Rings) 1985-Up	1	
56175H	Ring Kit, 4R44E/4R55E 1995-96	1	
56175L	Ring Kit, 4R44E/4R55E/5R55E 1997-Up	1	
56178AT	Ring, A4LD/4R44E/4R55E Stator (Front, Solid) (Torlon)	1	3L2Z-7L323-AA
56179	Ring, C-3 Direct Drum (2.354"OD) (Metal) 1974-87	2	D4ZZ-7D025-A
56179L	Ring, 5R55E Overdrive & Direct Drum (Vespel) 1997-Up	2-4	
56179T	Ring, A4LD/4R44E/4R55E Overdrive & Direct Drum (2.354"OD) (Teflon) 1985-Up	2-4	E5TZ-7D025-A
56179V	Ring, A4LD Direct Drum (2.354"OD) (Viton) 1985-92	2	E5TZ-7D0429-A
56179VL	Ring, A4LD/4R44E/4R55E Direct Drum (2.354"OD) (Viton) 1993-Up	2	F3TZ-7D429-A
56181	Ring, C-3/A4LD/4R44E/4R55E Forward Drum (1.496"OD) (Metal)	2	D4ZZ-7D019-A
56181T	Ring, C-3/A4LD/4R44E/4R55E Forward Drum (1.496"OD) (Teflon)	2	
56181LT	Ring, 5R55E Forward Clutch (1.576"OD) (Peek) 1997-Up	2	F77Z-M154-CA
56189	Ring, C-3 Governor (2.340"OD) (Metal) 1974-87	3	F0TZ-7D011-A
56189A	Ring, A4LD Governor (2.340"OD) (Cast Iron Plated)	3	
56189V	Ring, A4LD/4R44E/4R55E Governor (2.340"OD) (Viton) (Lathe Cut)	3	E7TZ-7D011-A

PART #	WASHERS & BEARINGS	QTY.	REFERENCE #
56200	Washer Kit, C-3 1974-87	1	
56200D	Washer Kit, A4LD 1985-89 (Contains 8 Metal Washers)	1	
56200E	Washer Kit, A4LD 1985-90	1	
56200EA	Washer Kit, A4LD/4R44E/4R55E 1991-95	1	
56210K	Shim Kit, C-3/A4LD/4R44E/4R55E Pump / Center Support Washer	1	
56211A	Washer, C-3/A4LD Pump / Center Support (.047") Metal	1	F0TZ-7D014-M
56211AA	Washer, C-3/A4LD Pump / Center Support (.047") Plastic	1	
56211B	Washer, C-3/A4LD Pump / Center Support (.055") Metal	1	F0TZ-7D014-A
56211BA	Washer, C-3/A4LD Pump / Center Support (.055") Plastic	1	F7TZ-7D014-VA
56211C	Washer, C-3/A4LD Pump / Center Support (.063") Metal	1	F0TZ-7D014-B
56211CA	Washer, C-3/A4LD/4R44E/4R55E Pump / Center Support (.063") Plastic	1	F7TZ-7D014-TA
56211D	Washer, C-3/A4LD Pump / Center Support (.067") Metal	1	F0TZ-7D014-C
56211DA	Washer, C-3/A4LD/4R44E/4R55E Pump / Center Support (.067") Plastic	1	
56211E	Washer, C-3/A4LD Pump / Center Support (.071") Metal	1	F0TZ-7D014-D
56211EA	Washer, C-3/A4LD/4R44E/4R55E Pump / Center Support (.071") Plastic	1	F7TZ-7D014-MA
56211G	Washer, C-3/A4LD Pump / Center Support (.075") Metal	1	F0TZ-7D014-E
56211GA	Washer, C-3/A4LD/4R44E/4R55E Pump / Center Support (.075") Plastic	1	F7TZ-7D014-NA
56211H	Washer, C-3/A4LD Pump / Center Support (.079") Metal	1	F0TZ-7D014-F
56211HA	Washer, C-3/A4LD/4R44E/4R55E Pump / Center Support (.079") Plastic	1	F7TZ-7D014-PA
56211J	Washer, C-3/A4LD Pump / Center Support (.083") Metal	1	F0TZ-7D014-G
56211JA	Washer, C-3/A4LD/4R44E/4R55E Pump / Center Support (.083") Plastic	1	F7TZ-7D014-RA

© Whatever It Takes Transmission Parts. Inc.

56211K	Washer, C-3/A4LD Pump / Center Support (.087") Metal	1	F0TZ-7D014-H
56211KA	Washer, C-3/A4LD/4R44E/4R55E Pump / Center Support (.087") Plastic	1	F7TZ-7D014-SA
56211L	Washer, C-3/A4LD Pump / Center Support (.094") Metal	1	F0TZ-7D014-J
56211LA	Washer, C-3/A4LD/4R44E/4R55E Pump / Center Support (.094") Plastic	1	
56211M	Washer, C-3/A4LD Pump / Center Support (.102") Metal	1	F0TZ-7D014-K
56211MA	Washer, C-3/A4LD/4R44E/4R55E Pump / Center Support (.102") Plastic	1	
56211N	Washer, C-3/A4LD Pump / Center Support (.110") Metal	1	F0TZ-7D014-L
56211NA	Washer, C-3/A4LD/4R44E/4R55E Pump / Center Support (.110") Plastic	1	
56211P	Bearing W/Races, 4R44E/4R55E Center Support (.105") Rear 1995-96 (2.382"ID) Also Fits A4LD/4R44E/4R55E Center Support (Front) 1993-96	1-2	F3TZ-7L326-A
56211PA	Bearing W/Races, 4R44E/4R55E Center Support (.115") Rear 1995-96 (2.382"ID)	1	F5TZ-7L326-A
56211PB	Bearing W/Races, 4R44E/4R55E Center Support (.122") Rear 1995-96 (2.382"ID)	1	F5TZ-7L326-B
56211PC	Bearing W/Races, 4R44E/4R55E Center Support (.129") Rear 1995-96 (2.382"ID)	1	F5TZ-7L326-C
56211R	Bearing W/Races, 5R55E Pump / Center Support (Rear) (.110") 1997-Up (2.450"ID)	1	F77Z-7D014-GA
56211RA	Bearing W/Races, 5R55E Pump / Center Support (Rear) (.116") 1997-Up (2.450"ID)	1	F77Z-7D014-HA
56211RB	Bearing W/Races, 5R55E Pump / Center Support (Rear) (.124") 1997-Up (2.450"ID)	1	F77Z-7D014-KA
56211RC	Bearing W/Races, 5R55E Pump / Center Support (Rear) (.131") 1997-Up (2.450"ID)	1	F77Z-7D014-LA
56214	Washer, A4LD/4R44E/4R55E/5R55E Overdrive Sun Gear Drive "Star Washer"	1	E5TZ-7660-A
56216	Race, A4LD/4R44E/4R55E Overdrive Planet To Overdrive Sun Gear (Front) 1985-96	1	E5TZ-7D235-B
56216B	Bearing W/Races, 4R44E/4R55E/5R55E Overdrive Planet To Overdrive Sun Gear (Stays In Planet) 1997-Up	1	
56217	Bearing, A4LD/4R44E/4R55E/5R55E Between Overdrive Planet & Overdrive Ring Gear Hub	1	E5TZ-7L495-A
56218A	Needle Bearing, A4LD/4R44E/4R55E Fits On Nose Of Overdrive Planet	1	
56220	Washer, A4LD Overdrive Planet To Sprag (Retainer) 1985-92	1	E7TZ-7L339-A
56223	Washer, A4LD Center Support (Front) (2 Inner Tabs) 1985-92	1	E5TZ-7L326-A
56223A	Bearing W/Races, 4R44E/4R55E Center Support (Front) 1993-96 (Use 56211P)	1	
56223B	Bearing W/Races, 4R44E/4R55E/5R55E Center Support (Front) 1997-Up (2.016"ID) (Also Fits 5R55E Forward Drum To Direct Drum 1997-Up) (Also Fits 4R44E/4R55E/5R55E/ 5R55N/5R55W Rear Planet To Hub 1997-Up)	1-3	F7TZ-7M153-EB
56226	Bearing W/Race, A4LD/4R44E/4R55E Center Support To Forward Drum (.157") (1 Notch) 1993-95	1	F3TZ-7C096-A
56226A	Bearing W/Race, A4LD/4R44E/4R55E Center Support To Forward Drum (.149") (2 Notch) 1993-95	1	F3TZ-7C096-B
56226AA	Bearing W/Race, A4LD/4R44E/4R55E Center Support To Forward Drum (.143") (3 Notch) 1993-95	1	F3TZ-7C096-C
56226AB	Bearing W/Race, A4LD/4R44E/4R55E Center Support To Forward Drum (.135") (4 Notch) 1993-95	1	F3TZ-7C096-D
56229	Washer, C-3/A4LD/4R44E/4R55E Direct Drum To Forward Drum (Metal)	1	E5TZ-7C096-A
56229AA	Washer, C-3/A4LD Direct Drum To Forward Drum (Plastic) (Cast Iron Direct Drums Only)	1	D4ZZ-7C096-A
56229G	Bearing W/Races, 5R55E Forward Drum To Direct Drum 1997-Up (Use 56223B)	1	
56231	Washer, C-3/A4LD Between Forward Drum & Hub (4 Inner Tabs) (Brass) 1974-89	1	D4ZZ-7D090-B
56232	Washer, C-3/A4LD Between Forward Drum & Hub (3 Outer Tabs) 1974-89	1	D4ZZ-7D090-A
56232A	Washer (Integral), A4LD Between Forward Drum & Hub (No Tangs) (Cup Type)	1	
56232B	Washer (Integral), A4LD Between Forward Drum & Hub (With Tangs) (Cup Type)	1	F0TZ-7D236-A
56232C	Washer, A4LD/4R44E/4R55E/5R55E Bearing To Planet (.350" Thick) 3rd Design (Solid Bronze)	1	F0TZ-7D090-A
56232D	Bearing W/Races, A4LD/4R44E/4R55E/5R55E Forward Drum To Planet (Used W/56232C) (Bearing & Races Snap Together As 1 Piece)	1	F3TZ-7D234-A
56232DAK	Bearing W/Race Set, A4LD/4R44E/4R55E/5R55E Forward Drum To Planet (Used W/56232C) Bearing & Races Come Apart As A 3 Piece Set)	1	
56235	Washer, C-3/A4LD Forward Planet To Hub (Use 56244)	1	
56235A	Bearing W/Race, A4LD/4R44E/4R55E/5R55E Between Forward Planet & Hub	1	E8TZ-7F374-A
56239	Race, C-3/A4LD Forward Planet To Sun Gear	1	E5TZ-7D235-A
56243	Race, C-3/A4LD/4R44E/4R55E Between Sun Shell & Rear Planet Washer 1985-96	1	D4ZZ-7D066-A
56244	Washer, C-3/A4LD Rear Planet To Shell (2 3/4"OD) (6 Outer Tabs) 1974-E89 (Also Fits Forward Planet To Hub) (Also Fits Rear Planet To Hub)	1-3	D4AZZ-7A166-A
56244B	Washer, A4LD/4R44E/4R55E Rear Planet To Shell (3 Outer Tabs) L1989-96	1	F0TZ-7A166-B
56244G	Bearing W/Races, 4R44E/4R55E/5R55E Rear Planet To Shell (3.035"OD)(2.010"ID)(.106"Thick) 1997-Up	1	F7ZZ-7M151-BA
56244GA	Bearing w/Races, 4R44E/4R55E/5R55E Rear Planet TO Shell (2.750"OD) Some 1999-Up (Use U56223B)		
56251	Washer, A4LD/4R44E/4R55E Rear Planet To Hub (2 3/4"OD) (6 Outer Tabs) 1985-E89 (Use 56244)	1	D4AZZ-7A166-A
56251A	Washer, A4LD/4R44E/4R55E Rear Planet To Hub (3"OD) (6 Outer Tabs) L1989-96	1	F0TZ-7A166-A
56251G	Bearing W/Races, 4R44E/4R55E/5R55E Rear Planet To Hub 1997-Up (Use 56223B)	1	
56254A	Washer, C-3/A4LD Between Rear Hub & Sprag Race (2 1/4"OD) Metal 1974-E89	1	F0TZ-7DA22-A
56254B	Washer, A4LD/4R44E/4R55E Between Rear Hub & Sprag Race (3 3/16"OD) Bronze L1989-96	1	F0TZ-7D422-A

FORD

© Whatever It Takes Transmission Parts. Inc.

PART #	WASHERS & BEARINGS (Continued)	QTY.	REFERENCE #
56254C	Race, 4R44E/4R55E/5R55E Rear Hub To Sprag Race (Steel) Snaps On The Rear Hub (W/Bronze Inner Ring) 1997-Up	1	F7ZZ-7M150-DA
56254CA	Bearing, 4R44E/4R55E/5R55E Rear Hub Race To Sprag Race (This Goes W/56254C) 1997-Up	1	F7ZZ-7M150-CA
56257	Washer, A4LD/4R44E/4R55E/5R55E Rear Case Thrust (4.0L) L1989-Up	1	
S56257K	Washer & End Cap Kit, A4LD Rear Sprag Inner Race Washer & 2 Sprag End Caps (4.0L) Sonnax	1	56250-01K
56261G	Caged Needle Bearing, 5R55E Reverse Drum 1997-Up	1	
56263	Washer, C-3/A4LD/4R44E/4R55E/5R55E Between Governor Support & Case	1	D4ZZ-7B368-A
56264G	Use 16264A	1	
16264A	Caged Needle Bearing, 5R55E Case To Output Shaft (# F-222722)	1	F77Z-7R205-AA
56268	Bearing, A4LD/4R44E/4R55E/5R55E Output Shaft Pilot	1	

PART #	GASKETS & RUBBER COMPONENTS	QTY.	REFERENCE #
56300	Gasket, C-3 Bottom Pan	1	D5ZZ-7A191-B
56300E	Gasket, A4LD/4R44E/4R55E/5R55E Bottom Pan	1	E5TZ-7A191-A
56305	Gasket, C-3/A4LD/4R44E/4R55E/5R55E Extension Housing	1	D4ZZ-7086-B
56307	Gasket, C-3/A4LD/4R44E/4R55E/5R55E Reverse Servo Cover	1	D4ZZ-7L173-A
56309	Washer, C-3/A4LD Pump Bolt 1974-94	8	E830124-S
56309E	O-Ring, A4LD/4R44E/4R55E/5R55E Pump Bolt 1995-Up	8	E804595-S200
56310	Gasket, C-3/A4LD/4R44E/4R55E Pump	1	F5TZ-7A136-A
56311	O-Ring, C-3/A4LD/4R44E/4R55E Pump	1	D5ZZ-78A248-A
56313A	O-Ring, A4LD/4R44E/4R55E/5R55E Inner Pump Gear	1	W701431-S300
56320	Gasket, C-3 Valve Body (Upper)	1	D4ZZ-7D100-B
56320A	Gasket, A4LD Valve Body (Upper)	1	E8TZ-7C155-A
56320AA	Gasket, A4LD Valve Body (Upper) (.015” Thick) (Oversize)	1	
56320H	Gasket, 4R44E/4R55E/5R55E Valve Body (Upper) 1995-Up	1	
56321	Gasket, C-3 Valve Body (Lower)	1	D4ZZ-7D100-A
56321AA	Gasket, A4LD Valve Body (Lower)	1	E8TZ-7D100-A
56321AB	Gasket, A4LD Valve Body (Lower) (.015” Thick) (Oversize)	1	
56321H	Gasket, 4R44E/4R55E/5R55E Valve Body (Lower) 1995-Up	1	
56326	Gasket, C-3 Filter	1	D5ZZ-7E062-A
56334	Lathe Cut Seal, C-3/A4LD/4R44E/4R55E/5R55E Forward Clutch (Inner)	1	D4ZZ-7A548-B
56335	Lathe Cut Seal, C-3/A4LD/4R44E/4R55E/5R55E Forward Clutch (Outer)	1	D4ZZ-7A548-A
56335A	Lip Seal, A4LD/4R44E/4R55E/5R55E Forward Clutch (Outer) 1990-Up	1	
56336	Lathe Cut Seal, C-3/A4LD Direct Clutch (Inner) 1974-87 And Overdrive Clutch (Inner) 1985-87	2	D7ZZ-7D404-A
56336A	Lip Seal, A4LD/4R44E/4R55E/5R55E Direct & Overdrive Clutch (Inner) 1988-Up	2	E8TZ-7D404-A
56337	Lathe Cut Seal, A4LD Direct & Overdrive Clutch (Outer) 1985-87	2	D7ZZ-7A548-A
56337A	Lip Seal, A4LD Direct Clutch (Outer) 1987-89 (Also Fits 4R44E/4R55E/5R55E Direct Clutch (Outer) 1995-05) (Also A4LD/4R44E/4R55E Overdrive Clutch (Outer) 1988-96)	2	E8TZ-7A548-A
56337AA	Lip Seal, A4LD Direct Clutch (Outer) 1990-96	1	
56337B	Lip Seal, A4LD/4R44E/4R55E Overdrive Clutch (Outer) 1997-05	1	F77Z-7A548-AA
36349	O-Ring, C-3/A4LD Throttle Shaft (No Lobes)	1	
36349A	O-Ring, C-3/A4LD Throttle Shaft (With 4 Lobes)	1	
56362	Lathe Cut Seal, C-3 Intermediate Servo Cover 1974-78 and A4LD Intermediate & Overdrive Servo Cover 1985	1-2	D4ZZ-7D040-A
56362A	O-Ring, A4LD/4R44E/4R55E/5R55E Intermediate & Overdrive Servo 1986-Up	2	E6TZ-7D040-A
56363A	O-Ring, C-3/A4LD/4R44E/4R55E/5R55E Reverse Servo Seal (Small)	1	D4ZZ-7423-B
56363C	O-Ring, C-3/A4LD/4R44E/4R55E/5R55E Reverse Servo Seal (Large)	1	D4ZZ-7423-A
56363D	O-Ring, A4LD/4R44E/4R55E/5R55E Reverse Servo (Large) Double Lip (Updated)	1	
44371A	O-Ring, C-3/A4LD/4R44E/4R55E/5R55E Filler Tube	1	6264902
76377	O-Ring, C-3/A4LD Neutral Safety Switch 1977-95	1	87009-S100
56379	O-Ring, A4LD Filter (Small) 1985 Only	1	E5TZ-7A469-B
56379A	O-Ring, A4LD/4R44E/4R55E/5R55E Filter O-Ring (Small) 1986-Up	1	E6TZ-7A469-B
56379L	O-Ring, A4LD Filter (Large) 1985 Only	1	E5TZ-7A469-A
56379LA	O-Ring, A4LD/4R44E/4R55E/5R55E Filter O-Ring (Large) 1986-Up	1	E6TZ-7A469-A
26385	Hockey Puck, C-3 Intermediate Accumulator Check Valve Seal (Rubber) 1964-86	1	
56385	Orifice Puck, A4LD/4R44E/4R55E/4R55E/5R55E Intermediate Accumulator Check Valve Seal (White Plastic) 1985-Up	1	
56390	External Seal Kit, C-3 (W/Pan Gasket) 1974-Up	1	
56390E	External Seal Kit, A4LD/4R44E/4R55E (With Pan Gasket) 1985-96	1	
56390H	External Seal Kit, 4R44E/4R55E/5R55E (With Pan Gasket) 1997-Up	1	

© Whatever It Takes Transmission Parts. Inc.

PART #	TECHNICAL MANUALS	QTY.	REFERENCE #
56400E	Technical Manual, A4LD	1	83-A4LDTM
56400R	Technical Manual, 4R44E/4R55E (Electric) 1995-Up	1	4R44E,4R55E
56400S	Technical Manual, 5R55E (5 Speed) 1997-Up	1	5R55E

PART #	ELECTRICAL COMPONENTS	QTY.	REFERENCE #
56410	Switch, A4LD Neutral Safety (5 Pin) 1985-95	1	E6TZ-7A247-A
56410A	Switch, C-3/A4LD Neutral Safety (4 Pin) 1977-95	1	D6RY-7A247-B
76410E	Switch, 4R44E/4R55E/5R55E Neutral Safety (8 Pin) 1992-97	1	F5AZ-7A247-AA
76410EA	Switch, 4R44E/4R55E/5R55E Neutral Safety (11 or 12 Pin) 1997-Up	1	F7LZ-7F293-AA
56420K	Solenoid Kit, A4LD (1 Lock-Up & 1 3-4 Shift Solenoid & 1 3 Prong Connector) 1989-95	1	52-9005
T56420K	Solenoid Kit, A4LD (1 Lock-Up & 1 3-4 Shift Solenoid) 1985-95 (Teckpak)	1	MS-A4LD
56420AK	Solenoid Kit, A4LD (1 Lock-Up & 1 Two Prong Connector) 1985-88 (Rostra) (Fits The 1 Solenoid Valve Body)	1	52-9006
56421	Solenoid, 4R44E/4R55E/5R55E Shift 1995-Up	1-4	F7TZ-7F293-AA
56423	Solenoid, A4LD 3-4 Shift (Except Aerostar) 1985-Up	1	E8TZ-7M107A
T56423	Solenoid, A4LD 3-4 Shift (All) 1985-Up	1	
56423A	Solenoid, A4LD 3-4 Shift (Aerostar) 1987-Up	1	E7SZ-7F037A
56425	Solenoid, A4LD TCC 1985-95	1	E5TZ-7F037-A
56425A	Solenoid, 4R44E TCC (Snout Is .810” Long)(.095”ID Hole) 1995-96	1	F5TZ-7F037-AA
56425B	Solenoid, 4R44E/4R55E/5R55E TCC (Snout Is .900” Long)(.160”ID Hole) 1997-Up	1	F77Z-7G136-AA
56431A	Solenoid, 4R44E/4R55E/5R55E EPC (Red Or White Screen) 1997-Up	1	XL2Z-7G383-AA
56436H	Sensor, 4R44E/4R55E/5R55E Output Speed 1997-Up (In Rear Of Case)	1	F7RZ-7H103-AA
56438H	Sensor, 4R44E/4R55E/5R55E Input Speed 1995-Up (Under Center Support)	1	F5TZ-7M101-A
56439H	Sensor, 5R55E Overdrive Drum (Front Case)	1	XW4Z-7M183-AA
56444	Connector, A4LD Case (2 Prong) Fits 1 Switch Valve Body 1985-88	1	E5TZ-7E449-A
56444A	Connector, A4LD Case (3 Prong) Fits 2 Switch Valve Body 1989-95	1	E7TZ-7E449-A
56446E	Wire Harness, 4R44E/4R55E/5R55E Internal (16 Prong Connector)(With Fluid Temperature Built Into The Connector) 1995-Up	1	F5TZ-7Z409-B
86445ECK	Repair Kit, AXOD/AXODE/AX4N Speed Sensor Wire Harness Connector (Fits 36438, 36774D, 86774B, 86774C, 86774H, F85Z-2L373AB)	1	
F85Z-2L373AB	Speed Sensor, Rear Axle Housing (Output Speed) 1990-97 Aerostar, 1990 Bronco II, 1990-06 E-150/250/350, 1990-03 F-150, 1991-01 Expedition/Mountaineer, 1990-99 F250, 1999-04 SD F250-F450, 2000-06 Excursion, 1990-03 Ranger, 2000-01 Sporttrac, 1997-02 Expedition	1	

PART #	MISC. COMPONENTS	QTY.	REFERENCE #
26487	Grommet, C-3/A4LD/4R44E/4R55E/5R55E Shift Linkage Grommet (5/16”ID)	1	D5AZ-7341-A
26487B	Grommet, C3/A4LD/4R44E/4R55E/5R55E Passing Gear (Narrow Groove) Green	1	
26487BA	Grommet, C3/A4LD/4R44E/4R55E/5R55E Passing Gear (Wide Groove) Black	1	
26487BW	Grommet, C3/A4LD/4R44E/4R55E/5R55E Passing Gear (Narrow Groove) (Yellow Or Black)	1	
26487C	E-Clip, C-3/A4LD Linkage	1	

PART #	HARDPARTS	QTY.	REFERENCE #
56520	Stator, C-3 W/Gears 1974-87	1	D6ZZ-7A103-A
56520A	Stator, A4LD W/Gears (Hex Head Bolts) 1985-87	1	E5TZ-7A103-A
56520B	Stator, A4LD W/Gears (Allen Head Bolts) (Rear Bushing Is Recessed 1/2” Down From Rear Of Stator) 1988-94 (Can Use 56520BA)	1	F0TZ-7A103-A
56520BA	Stator, A4LD W/Gears (Allen Head Bolts) (Rear Bushing Is At The Rear Of The Stator) 1992-94 (Can Use 56520B)	1	
56520D	Stator, 4R44E/4R55E W/Gears (6 Bolt Electronic) 1995-Up	1	F5TZ-7A103-B
56520G	Stator, 5R55E W/Gears (24 Teeth Inner Gear) W/Outer Caged Bearing 1997-Up	1	F77Z-7A103-CA
56520GA	Stator, 5R55E W/Gears (16 Teeth Inner Gear) W/Outer Caged Bearing	1	XL2Z-7A103-AA
T-16520A	Pump Alignment Tool, A4LD/4R44E/4R55E/5R55E (This Is Made Special For Us)	1	
56530	Pump Gears, C-3/A4LD/4R44E/4R55E 1974-94	1	4DT-7L201
56530AX	Pump Gears, C-3/A4LD/4R44E/4R55E (Oversized) 1974-Up (3.710”OD x .511” Thick)	1	
56530AAX	Pump Gears, C-3/A4LD/4R44E/4R55E (Oversized) 1974-Up (3.714”OD x .514” Thick)	1	
56530E	Pump Gears, 4R44E/4R55E/5R55E (W/Inner O-Ring) 1995-Up (24T On Inner Gear)	1	
56530EX	Pump Gears, 4R44E/4R55E/5R55E (With Inner O-Ring) (Oversize) 1995-Up	1	
56530G	Pump Gears, 5R55E (16 Teeth Inner Gear, With O-Ring)	1	
56544	Plate, C-3 Pump 1974-87	1	E5TZ-7B472-B
56544A	Plate, A4LD Pump (Uses Hex Head Pump Bolts) 1985-87	1	E5TZ-7B472-B
56544B	Plate, A4LD Pump (Uses Allen Head Pump Bolts) 1988-Up	1	F0TZ-7B472-B
56544D	Plate, 4R44E/4R55E/5R55E Pump (6 Bolt Electronic) 1995-11	1	F5TZ-7B472-A
56550A	Drum, A4LD Overdrive (3 Clutch) 1985-E89	1	E9TZ-7L669-A
56550AA	Drum, A4LD Overdrive (2 Clutch) 1985-E89	1	D4ZZ-7A248-A

© Whatever It Takes Transmission Parts. Inc.

PART #	HARDPARTS (Continued)	QTY.	REFERENCE #
56550B	Drum, A4LD/4R55E Overdrive (3 Clutch) L1989-94	1	F0TZ-7L669-A
56550BA	Drum, A4LD/4R44E Overdrive (2 Clutch) 1995-96	1	
56550C	Drum, 5R55E Overdrive (2 Clutch) 1997-Up	1	
56554	Drum, C-3 Forward Clutch (4 Clutch) 1974-77	1	D5ZZ-7A360-A
56554A	Drum, C-3 Forward Clutch (5 Clutch) 1978-87	1	D8ZZ-7A360-A
56554B	Drum, A4LD Forward Clutch (4 Clutch) 1985-89	1	F0TZ-7A360-A
56554BA	Drum, A4LD Forward Clutch (5 Clutch) 1985-89	1	E5TZ-7A360-A
56554BB	Drum, A4LD Forward Clutch (4 Clutch) Uses Washer #229 (No Bearing #226) 1990-Up	1	F0TZ-7A360-A
56554BC	Drum, A4LD Forward Clutch (4 Clutch) Uses Washer #229 And Bearing #226 1990-Up	1	
56554BD	Drum, A4LD Forward Clutch (6 Clutch) Uses Washer #229 (No Bearing #226) 1990-Up	1	
56554C	Drum, A4LD/4R44E Forward Clutch (5 Clutch) (Uses Bearing #226) 1991-Up (Can Use 56554D If Customer Has 1 Extra Friction & Steel)	1	
56554D	Drum, A4LD/4R55E Forward Clutch (6 Clutch) (4.0L) Uses A Bearing #226 1991-Up	1	F0TZ-7D044-A
56554E	Drum, 5R55E Forward Clutch (4 Clutch) With Caged Outer Bearings Between Rings 1997-Up	1	
56554EA	Drum, 5R55E Forward Clutch (5 Clutch) With Caged Outer Bearings Between Rings 1997-Up	1	
56554EB	Drum, 5R55E Forward Clutch (6 Clutch) With Caged Outer Bearings Between Rings 1997-Up	1	
56555	Drum, C-3 Direct Clutch (4 Cylinder) 1974-77	1	
56555A	Drum, C-3 Direct Clutch (V-6) 1975-77	1	D5FZ-7D044-A
56555B	Drum, C-3 Direct Clutch 1978-87	1	D8ZZ-7D044-C
56555C	Drum, A4LD Direct Clutch (4 Clutch) (Steel) 1985-E89	1	E5TZ-7D044-F
56555D	Drum, A4LD Direct Clutch (5 Clutch) (Steel) 1985-E89	1	E5TZ-7D044-E
56555E	Drum, A4LD Direct Clutch (4 Clutch) (Steel) L1989-Up	1	
56555EA	Drum, A4LD Direct Clutch (4 Clutch) (Steel) W/2 Square Slots For Shell Locking Lugs)	1	
56555EK	Drum Kit, A4LD Direct Clutch (4 Clutch) (Steel) W/Clutch Pack (Retro Fit) L1989-Up	1	
56555G	Drum, A4LD Direct (5 Clutch) (Steel) L1989-Up	1	E5TZ-7D044-E
56555GA	Drum, A4LD Direct Clutch (5 Clutch) (Steel) W/2 Square Slots For Shell Locking Lugs	1	
56555H	Drum, A4LD Direct Clutch (3 Clutch) (Cast Iron) (.150" Thick Lugs) L1989-Up	1	
56555HA	Drum, A4LD Direct Clutch (3 Clutch) (Cast Iron) (.350" Thick Lugs) L1989-Up	1	F0TZ-7D044-A
56555J	Drum, A4LD Direct Clutch (5 Clutch) (Cast Iron) (.150" Thick Lugs) L1989-Up (Uses A 4 1/2"OD Piston With Cast # 90DT)	1	F0TZ-7D044-C
56555JA	Drum, A4LD Direct Clutch (5 Clutch) (Cast Iron) (.350" Thick Lugs) L1989-Up (Uses A 4 1/2"OD Piston With Cast # 90DT)	1	
56555K	Drum, A4LD/4R44E Direct Clutch (4 Clutch) (Cast Iron) (.150" Thick Lugs) L1989-Up	1	F0TZ-7D044-B
56555KA	Drum, A4LD/4R44E Direct Clutch (4 Clutch) (Cast Iron) (.350" Thick Lugs) L1989-Up	1	
56555L	Drum, A4LD/4R44E Direct Clutch (5 Clutch) (Cast Iron) (.150" Thick Lugs) 1991-Up (Uses A 4 1/4"OD Piston With Cast # 88DT)	1	F0TZ-7D044-C
56555LA	Drum, A4LD/4R44E Direct Clutch (5 Clutch) (Cast Iron) (.350" Thick Lugs) 1991-Up (Uses A 4 1/4"OD Piston With Cast # 88DT)	1	
56555M	Drum, A4LD/4R55E Direct Clutch (6 Clutch) (Cast Iron) (.150" Thick Lugs) L1989-Up	1	
56555MA	Drum, A4LD/4R55E Direct Clutch (6 Clutch) (Cast Iron) (.350" Thick Lugs) L1989-Up	1	F0TZ-7D044-C
56555N	Drum, 5R55E Direct Clutch (4 Clutch) (Cast Iron) 1997-Up (Uses A 4 1/4"OD Piston With Cast # 88DT)	1	
56555NA	Drum, 5R55E Direct Clutch (5 Clutch) (Cast Iron) 1997-Up (Uses A 4 1/4"OD Piston With Cast # 88DT)	1	
56555NB	Drum, 5R55E Direct Clutch (6 Clutch) (Cast Iron) 1997-Up (Uses A 4 1/4"OD Piston With Cast # 88DT)	1	
56555NC	Drum, 5R55E Direct Clutch (4 Clutch) (Cast Iron) 1997-Up (Uses A 4 1/2"OD Piston With Cast # 90DT)	1	
56555ND	Drum, 5R55E Direct Clutch (5 Clutch) (Cast Iron) 1997-Up (Uses A 4 1/2"OD Piston With Cast # 90DT)	1	
56555NE	Drum, 5R55E Direct Clutch (6 Clutch) (Cast Iron) 1997-Up (Uses A 4 1/2"OD Piston With Cast # 90DT)	1	
56556	Drum, C-3/A4LD/4R44E Reverse Band (Less Sprag) (Uses Roller Type Sprag) (10 Lugs)	1	D4ZZ-7C498-A
56556A	Drum, A4LD/4R55E Reverse Band (4.0L) (W/Lug Type Sprag) (30 Lugs For Rear Planet)	1	F0TZ-7C498-A
56556B	Drum, 5R55E Reverse Band W/Needle Bearing (W/16 Lug Sprag) (10 Lugs For Rear Planet)	1	
56556BA	Drum, 5R55E Reverse Drum W/Needle Bearing (W/26 Lug Sprag) (10 Lugs For Rear Planet)	1	
56560	Piston Kit, A4LD Overdrive Drum (Lathe Cut Seal Type)1985-87 (Cast # 74DT)(4 1/2"OD) (Also Fits A4LD/4R44E/4R55E/5R55E Direct Drum)	1-2	
56560A	Piston Kit, A4LD/4R44E/4R55E Overdrive Drum (Lip Seal Type) 1988-Up (Cast # 88DT Or 74DT) (4 1/4"OD)(Also Fits A4LD/4R44E/4R55E/5R55E Direct Drum)	1-2	
56560C	Piston Kit, 5R55E Overdrive Drum (Cast # 97GT) (4 7/8"OD) 1997-Up	1	
56564B	Piston Kit, C-3/A4LD/4R44E/4R55E/5R55E Forward Drum 1974-Up	1	D822-7A262-A
56565A	Piston Kit, C-3 Direct Drum	1	
56565C	Piston Kit, A4LD/4R44E/4R55E/5R55E Direct Drum (4 1/2"OD) (Use 56560) (Cast # 74DT)	1	
56565CA	Piston Kit, A4LD/4R44E/4R55E/5R55E Direct Drum (4 1/4"OD) (Use 56560A)	1	

FORD

© Whatever It Takes Transmission Parts. Inc.

56565D	Piston Kit, A4LD/4R44E/4R55E/5R55E Direct Drum (4 1/2"OD) (Cast # 90DT)	1	
56580	Planet, A4LD Overdrive (W/Out Reluctor Ring) W/Out Race # 216	1	F2TZ-7B446-B
56580A	Planet, A4LD/4R44E/4R55E Overdrive (With Reluctor Ring) W/Out Race # 216 (Does Not Have An Oil Baffle) (Can Use 56580B)	1	F77Z-7B446-AA
56580B	Planet, 4R44E/4R55E Overdrive (With Reluctor Ring) With 1 Piece Bearing # 216 (With Oil Baffle) W/Solid Pins (Retro 56580A) (Can Use 56580BA)	1	2L5Z-7B446-AA
56580BA	Planet, 5R55E Overdrive (W/Reluctor Ring) With 1 Piece Bearing # 216 (With Oil Baffle) W/Holes In Pinion Pins (Can Use 56580B)	1	XL2Z-7B446-AB
56580HDA	Planet, A4LD Overdrive (W/Out Reluctor Ring) W/Out Race # 216 (With Hardened Housing)	1	
56582	Planet, C-3/A4LD Forward (Aluminum) Uses A Thrust Washer # 232 1974-89	1	D4ZZ-7A398-A
56582K	Planet Kit, C-3/A4LD Forward Planet (Aluminum) Can Be Used In Any Forward Planet (Early Type) (Contains: # 232, 881, 231, 882, 602, 592, 235 & 582)	1	
56582A	Planet, A4LD/44R44E Forward (Aluminum) Uses An Integral Washer # 232 1990-Up	1	
56582AK	Planet Kit, A4LD/4R44E Forward (Aluminum) With Integral Washer # 232 1990-Up (Contains: # 232, 881, 231, 602, 592, 235 & 582)(Can Use For All Planets)	1	
56582B	Planet, A4LD/4R44E Forward (Steel) (3 Gear) Uses An Integral Washer # 232 1990-Up	1	E7TZ-7A398-A
56582BK	Planet Kit, A4LD/4R44E Forward (Steel) (3 Gear) Can Use For All Planets (Contains: # 232, 881, 231, 882, 602, 592, 235 & 582)	1	
56582BA	Planet, A4LD/4R44E Forward (Steel) (3 Gear) Uses A .350" Thick Brass Washer # 232 1990-Up	1	
56582BAK	Planet Kit, A4LD/4R44E Forward (Steel) (3 Gear) Can Use For All Planets (Contains: # 232, 881, 231, 882, 602, 592, 235 & 582) Uses A .350" Thick Brass Washer # 232)	1	
56582BB	Planet, A4LD/4R44E Forward (Steel) (3 Gear) Uses A Bearing # 232 (Has A 1 Piece Bearing Inside) 1990-Up	1	
56582BBK	Planet Kit, A4LD/4R44E Forward (Steel) (3 Gear) Can Use For All Planets (Contains: # 232, 881, 231, 882, 602, 592, 235 & 582) Has A 1 Piece Bearing Inside	1	
56582D	Planet, A4LD/4R44E Forward (Steel) (4 Gear) Uses An Integral Washer # 232 (Has A 3 Piece Bearing Inside) 1990-Up	1	E8TZ-7A398-A
56582DK	Planet Kit, A4LD/4R44E Forward (Steel) (4 Gear) (Can Use For All Planets) (Contains: # 232, 881, 231, 882, 602, 592, 235 & 582)	1	
56582DA	Planet, A4LD/4R44E Forward (Steel) (4 Gear) Uses A Bearing #232 (Has A 1 Piece Bearing Inside) 1990-Up	1	
56582DAK	Planet Kit, A4LD/4R44E Forward (Steel) (4 Gear) Uses A Bearing # 232 (Has A 1 Piece Bearing Inside) 1990-Up (Can Use For All Planets) (Contains: # 232, 881, 231, 882, 602, 592, 235 & 582)	1	
56582DB	Planet, A4LD/4R44E Forward (Steel) (4 Gear) Uses A Bearing # 232 (Has A 3 Piece Bearing Inside) 1990-Up	1	
56582E	Planet, A4LD/4R55E Forward (Steel) (6 Gear) Uses A .350" Thick Brass Washer # 232 (Has A 3 Piece Bearing Inside) 1990-Up	1	F0TZ-7A398-B
56582EK	Planet Kit, A4LD/4R55E Forward (Steel) (6 Gear) Can Be Used In Place Of Any Forward Planet 1990-Up (Contains: # 232, 881, 231, 882, 602, 592, 235 & 582)	1	
56582EA	Planet, A4LD/4R55E/5R55E Forward (Steel) (6 Gear) Uses A Bearing # 232 (Has A 1 Piece Bearing Inside) 1990-Up	1	XL2Z-7A398-AA
56582EAK	Planet Kit, A4LD/4R55E/5R55E Forward (Steel) (6 Gear) Uses A Bearing # 232 (Has A 1 Piece Bearing Inside) 1990-Up (Contains: # 232, 602, 235, 582) (Can Use For All Planets)	1	F0TZ-7A398-E
56584	Planet, C-3/A4LD /4R44E Rear (Aluminum) (3 Gear) 10 Driving Lugs	1	E7SZ-7D006-C
56584B	Planet, A4LD/4R44E Rear (Steel) (3 Gear) 10 Driving Lugs	1	
56584D	Planet, 4R44E Rear (Steel) (4 Gear) 10 Driving Lugs (Bearing Type) 1997-Up	1	E7SZ-7D006-C
56584EA	Planet, A4LD/4R55E Rear (Steel) (6 Gear) 30 Driving Lugs	1	F0TZ-7D006-A
56584G	Planet, 4R55E/5R55E Rear (Steel/Cast) (6 Gear) 10 Driving Lugs (Bearing Type)	1	XL2Z-7D006-AA
56590	Ring Gear, A4LD Overdrive Planet (Used W/Steel Caged Sprag)	1	E5TZ-7A153-A
56590B	Ring Gear, A4LD/4R44E/4R55E/5R55E/5R55N Overdrive Planet (Used W/Plastic Caged Sprag) (Uses 24 Teeth Sun Gear)	1	F3TZ-7A153-A
56592	Ring Gear, C-3/A4LD Forward Planet (Clutch Spline Length is 1 1/4") 1974-Up	1	D4ZZ-7D392-A
56592B	Ring Gear, A4LD/4R44E/4R55E/5R55E Forward Planet (Clutch Spline Length Is 1 5/8")	1	
56594	Ring Gear, C-3/A4LD/4R44E/4R55E/5R55E Rear Planet 1974-Up	1	D4ZZ-7A153-A
56602	Hub, C-3 Forward Ring Gear (57 Teeth) Uses A Washer # 235	1	
56602A	Hub, A4LD Forward Ring Gear (57 Teeth) Uses A Bearing # 235 (1.500"ID) 1985-E87	1	
56602B	Hub, A4LD Forward Ring Gear (57 Teeth) Uses A Bearing # 235 (1.587"ID) L1987-Up	1	E7TZ-7B067-A
56602C	Hub, A4LD/4R44E/4R55E/5R55E Forward Ring Gear (12 Small Teeth) L1987-Up	1	F8TZ-7B067-AC
56602D	Hub, A4LD/4R44E/4R55E/5R55E Forward Ring Gear (4 Small Teeth) L1987-Up	1	
56604	Hub, C-3/A4LD Rear Ring Gear (For Aluminum Planet) (1.235"OD Nose) 1974-Up	1	F0TZ-7D164-B
56604-1	Hub, C-3/A4LD Rear Ring Gear (For Aluminum Planet) (1.375"OD Nose) 1974-Up	1	
56604A	Hub, A4LD/4R44E Rear Ring Gear (For Steel Planet) (1.235"OD Nose)	1	
56604AA	Hub, A4LD/4R55E Rear Ring Gear (For Steel Planet W/Oil Dam) (1.590"OD Nose) (Uses A Washer # 254) Can Use 56604AC Or 56604ADK	1	F0TZ-7D164-C
56604AB	Hub, A4LD/4R55E Rear Ring Gear (For Steel Planet W/Oil Dam) (1.375"OD Nose)	1	
56604AC	Hub, A4LD/4R55E Rear Ring Gear (For Steel Planet W/Out Oil Dam) (1.590"OD Nose) Uses A Bearing # 254 (.855" Overall Height) Uses A Washer # 251 (Can Use 56604ADK)	1	

© Whatever It Takes Transmission Parts. Inc.

PART #	HARDPARTS (Continued)	QTY.	REFERENCE #
56604AD	Hub, 4R55E/5R55E Rear Ring Gear (For Steel Planet) (1.590"OD Nose) (.855" Overall Height) Uses A Bearing # 251	1	F77Z-7D164-AD
56604ADK	Hub Kit, A4LD/4R44E/4R55E/5R55E Rear Ring Gear (For Steel Planet) (1.590"OD Nose) (Contains: 56604AD, 56223B, 56254C & 56254CA) Can Use In Place of 56604AA & 56604AC	1	
56610	Sun Gear, A4LD/4R44E/4R55E/5R55E Overdrive (24 Teeth) 1985-Up (Also Fits 5R55N)	1	F7RZ-7D063-AA
56612	Sun Gear, C-3/A4LD/4R44E Forward (2 Bushing Type) 1974-Up	1	D4ZZ-7D063-A
56612A	Sun Gear, A4LD/4R55E/5R55E Forward (4.0L) (No Bushing Type) L1989-Up	1	F0TZ-7D063-A
56622	Shell, C-3/A4LD/4R44E Driving (Except 4.0L) 1974-Up	1	D4AA-7D064-A
56622A	Shell, A4LD/4R55E Driving (4.0L) L1989-96 (Uses Washer # 244)	1	F0TZ-7D064-A
56622B	Shell, A4LD Driving (W/2 Locking Lugs To Lock On The Direct Drum) L1989-94	1	F3TZ-7D064-A
56622C	Shell, 5R55E Driving 1997-2000	1	F77Z-7D064-BB
56622D	Shell, 5R44E/5R55E Driving (W/24 Holes For ISS) 2001-Up	1	
56630	Center Support, A4LD (Does Not Use A Bearing #226) 1985-92	1	E5TZ-7A130-A
S56630-2	Bushing, A4LD Center Support (Sonnax) Replacement Bushing (Use W 56630-2K Bushing Driver)	1	
S56630-2K	Bushing & Driver, A4LD Center Support (Sonnax) For Replacement Bushing Use S36630-2	1	
S56630-4	Sleeve, A4LD Center Support To Direct Drum (Steel Presses Onto The Center Support) (Sonnax)	1	
56630A	Center Support, A4LD (Uses A Bearing #226) W/Out Speed Sensor 1992-93	1	F3TZ-7A130-B
56630B	Center Support, A4LD/4R44E/4R55E (Uses A Bearing # 226) W/Speed Sensor 1993-Up	1	F5TZ-7A130-B
56630C	Center Support, 5R55E (Has A Caged Bearing In Ring Area)(With Speed Sensor) 1997-Up	1	F77Z-7A130-CB

PART #	SPRAGS & ONE WAY CLUTCHES	QTY.	REFERENCE #
56650	Sprag, A4LD Overdrive (.406" Wide Lugs) (Metal Cage) 1986-96	1	E5TZ-7A089-A
56650B	Sprag, A4LD/4R44E/4R55E Overdrive (.406" Wide Lugs) (Plastic Cage) L1989-Up	1	
56650C	Sprag, 4R44E/4R55E/5R55E (.460" Wide Lugs) (Plastic Cage) 1997-Up (With Brass Washer On One Side)	1	50001BW
56654	Sprag, C-3/A4LD/4R44E Rear (Except 4.0L) 1974-Up (Spring & Roller Kit)	1	
56654A	Sprag, A4LD/4R55E Rear (4.0L) (26 Lugs) (Plastic Cage W/2 Brass Washers) L1989-Up	1	
56654B	Sprag, 5R55E Rear (26 Lugs) 1997-Up	1	50004BW
56654H	Sprag, 4R44E Rear (16 Lugs) 1997-Up	1	50005BW

PART #	HARDPARTS (Continued)	QTY.	REFERENCE #
56664	Inner Race, C-3 Rear Sprag (Bolts In Case)	1	
56664A	Inner Race, A4LD/4R44E Rear Sprag (Roller Sprag) Presses In Case 1985-Up	1	
56664B	Inner Race, A4LD/4R55E/5R55E Rear Sprag (Lug Type Sprag) (4.0L) L1989-Up	1	
S56664BK	Sprag Update Kit, A4LD Inner Race, Washer & 2 End Caps (Replaces Loose Sprag Inner Races) 4.0L (Also Converts 2.8L, 2.9L & 3.0L Cases To 4.0L) (Sonnax)	1	56600B-01K
T-56600-DJ	Drill Jig, A4LD For Removing Rear Inner Race (Sonnax)	1	56600-DJ
56670	Input Shaft, C-3 1974-Up	1	D4ZZ-7017-C
56670A	Input Shaft, A4LD (9 7/8" Long) 1985-89	1	F0TZ-7017-D
56670B	Input Shaft, A4LD/4R44E/4R55E/5R55E (10" Long) (Retro-Fits) 1990-Up	1	XL2Z-7017-AA
56674	Center Shaft, A4LD Overdrive (Bushing Type) With .438"OD Pilot 1985-89	1	E5TZ-7A658-A
56674A	Center Shaft, A4LD/4R44E Overdrive (Bearing Type)(With .392"OD Pilot) 1990-96 (Except 4.0L) Uses Sprag With Metal Cage	1	F2TZ-7A658-A
56674B	Center Shaft, A4LD/4R55E Overdrive (4.0L)(Bearing Type)(With .392"OD Pilot) 1990-96 Uses Sprag With Plastic Cage	1	F2TZ-7A658-B
56674C	Center Shaft, 5R55E Overdrive (Uses 24 Teeth Sun Gear) 1997-Up	1	XL2Z-7A658-AA
56674CK	Center Shaft Assembly, 5R55E Overdrive (Uses 24 Teeth Sun Gear) 1997-Up (Contains: 56674C, 56590B & 56650C)	1	
56678	Output Shaft, C-3 2WD (4 Cylinder)	1	E3TZ-7060-C
56678A	Output Shaft, C-3 2WD (V-6)	1	D9ZZ-7060-A
56678B	Output Shaft, A4LD 2WD (Bushing Type) Speed-O Gear Is 6 1/2" From Rear End Of Shaft	1	E9TZ-7060-D
56678C	Output Shaft, A4LD 2WD (Bushing Type) Speed-O Gear Is 3 1/2" From Rear End Of Shaft (W/Bolt On Yoke)	1	
56678CA	Output Shaft, A4LD 2WD (Bushing Type) Speed-O Gear Is 4 7/8" From Rear End Of Shaft (W/Bolt On Yoke)	1	
56678D	Output Shaft, A4LD 4x4 (Bushing Type)	1	E9TZ-7060-E
56678E	Output Shaft, A4LD/4R44E 2WD (Bearing Type) Speed-O Gear Is 4 7/8" From Rear End Of Shaft (Used With Sun Gear With 2 Bushings)	1	
56678EA	Output Shaft, A4LD/4R44E 2WD (Bearing Type) Speed-O Gear Is 6 1/2" From Rear End Of Shaft (Used With Sun Gear With 2 Bushings)	1	
56678G	Output Sahft, A4LD/4R44E 2WD (Bearing Type) Speed-O Gear Is 6 1/2" From Rear End Of Shaft (Used With Sun Gear With 2 Bushings) With Bolt On Yoke	1	
56678H	Output Shaft, A4LD/4R44E 4x4 (Bearing Type) Used With Sun Gear With 2 Bushings	1	

FORD

© Whatever It Takes Transmission Parts. Inc.

56678J	Output Shaft, A4LD/4R55E 2WD (Bearing Type) Speed-O Gear Is 4 7/8" From Rear End Of Shaft (Used With Sun Gear With No Bushings)	1	
56678JA	Output Shaft, A4LD/4R55E 2WD (Bearing Type) Speed-O Gear Is 6 1/2" From Rear End Of Shaft (Used With Sun Gear With No Bushings)	1	
56678L	Output Shaft, 4R55E/5R55E 4x4 (Bearing Type) (Used With Sun Gear With No Bushings)	1	
56678M	Output Shaft, 4R55E/5R55E 2WD (Bearing Type) (Used With Sun Gear With No Bushings) (Has No Speed-O Gear)	1	
56680	Governor, C-3 (4 Bolt) 1974-87	1	D9ZZ-7C063-A
56680A	Governor, A4LD (Small Land On Valve Is .385"OD) (Valve Has 1 Groove)	1	D8ZZ-7C063-A
56680AA	Governor, A4LD (Small Land On Valve Is .385"OD) (Valve Has 2 Grooves)	1	
56680AB	Governor, A4LD (Small Land On Valve Is .385"OD) (Valve Has 3 Grooves)	1	
56680B	Governor, A4LD (Small Land On Valve Is .326"OD) 1990-95 3.0L	1	E89Z-76063-B
56680C	Governor, A4LD (Small Land On Valve Is .314"OD) (Valve Has 1 Groove)	1	
56680CA	Governor, A4LD (Small Land On Valve Is .314"OD) (Valve Has No Groove)	1	
56681-1	Governor Body, A4LD (Small Land On Valve Is .314"OD) 2.3L 1989-90	1	E5ZZ-7C063-A
56681-1A	Governor Body, A4LD (.326"ID On Smaller Valve Bore)	1	E89Z-7C063-A
56681-1B	Governor Body, A4LD (.385"ID On Smaller Valve Bore)	1	D7RY-7C063-A
56681-2A	Governor Valve, A4LD (.314"OD On Small Land) No Groove	1	E8RY-7C054-B
56681-2AA	Governor Valve, A4LD (.314"OD On Small Land) 1 Groove	1	E7RY-7C054-A
56681-2B	Governor Valve, A4LD (.326"OD On Small Land) 1 Groove	1	E79Z-7C054-A
56681-2C	Governor Valve, A4LD (.385"OD On Small Land) 1 Groove	1	E0BZ-7C054-A
56681-2CA	Governor Valve, A4LD (.385"OD On Small Land) 2 Groove	1	D8FZ-7C054-A
56681-2CB	Governor Valve, A4LD (.385"OD On Small Land) 3 Groove	1	E3DZ-7C054-A
56681-3A	Governor Spring, A4LD (Brown)	1	D8BZ-7A302-A
56681-3C	Governor Spring, A4LD (Blue)	1	E89Z-7A302-A
56681-3D	Governor Spring, A4LD (White)	1	E7RY-7A302-A
56681-4A	Governor Weight, A4LD (30mm OD)	1	E3DZ-7D324-A
56681-4B	Governor Weight, A4LD (35mm OD)	1	D8BZ-7D324-A
56681-4C	Governor Weight, A4LD (38mm OD)	1	D8ZZ-7D324-A
56685	Support, C-3/A4LD Governor (Except 4.0L) Cast Iron 1974-Up	1	D8ZZ-7D220-A
56685A	Support, A4LD Governor (4.0L) Forged Steel 1990-Up	1	
56685C	Support, 4R44E/4R55E Parking Gear 1995-Up	1	
56685D	Support, 5R55E Parking Gear (W/8 Spoke Reluctor) 1997-Up	1	XL2Z-7M176-AA
56698	Oil Dam, A4LD/4R55E/5R55E (4.0L) Output Shaft Sleeve	1	F0TZ-7B176-A
56740	Valve Body, C-3 1974-87	1	
56740A	Valve Body, A4LD W/1 Solenoid 1985-87	1	
56740B	Valve Body, A4LD W/2 Solenoid 1988-94	1	
56740C	Valve Body, 4R44E/4R55E/5R55E W/6 Solenoids 1995-Up	1	3L5Z-7A100-AA

PART #	VALVE BODY COMPONENTS	QTY.	REFERENCE #
56741-3	Spring, A4LD 4-3 Kickdown Spring	1	E5TZ-7E479-A
S56741-6K	End Plug Kit, A4LD (Small, Medium & Large) (14 Pieces) (Sonnax)	1	
S56741A-1K	Relief Valves, A4LD/4R44E (In Valve Body) (10 Per Kit) (Sonnax)	1	
56741A-3	Spring, A4LD Converter Clutch Lock-Up Spring	1	E5TZ-7L490-A
S56741AAK	Relief Valve Kit, 4R44E/4R55E/5R55E EPC & TCC (Sonnax)(Must Use T-37947-TL40 Tool) (Contains: 1 Relief Spring, 1 Guide Spring & 1 Check Ball)	1	
T-37947-TL40	Tool For S56741AAK	1	
56741B-3	Spring, A4LD 2-3 Backout Spring (Light Blue)	1	F3TZ-7D230-B
S56741B-1K	Boost Valve Kit, A4LD (High Ratio) With O-Rings (Sonnax)	1	56947-02K
S56741BA-1K	Boost Valve Kit, A4LD (Low Ratio) With O-Rings (Sonnax)	1	56947-04K
S56741BB-1K	Boost Valve Kit, A4LD (High Ratio) W/Out O-Rings (Sonnax) Factory Style	1	
S56741BC-1K	Boost Valve Kit, A4LD (Low Ratio) W/Out O-Rings (Sonnax) Factory Style	1	
S56741BK	Baseline Rebuild Kit, 4R44E/4R55E/5R55E (Sonnax) (Boost Valve Assembly, Forward Modulation Valve, 6 End Plugs, 4 Torlon Check Balls, O-Rings & Springs)	1	
S56741C-3	Spring Kit, A4LD Anti-Shudder (2 Per Kit) (Sonnax)	1	56995A
56741C-4	Clip, A4LD Valve Retainer	1	E5AZ-7E335-A
S56741CA-1	Valve, 4R44E/4R55E/5R55E TCC Regulator (OE Style)(Sonnax)	1	
S56741CA-3K	Spring Kit, 4R44E/4R55E/5R44E/5R55E TCC Regulator Valve (Sonnax) (Contains: 5 Outer & 5 Inner Springs)	1	37947-46K
S56741D-4AK	Disc Retainer Set, A4LD Valve Retainer (Disc Shaped) (10 Per Set) (Sonnax)	1	
S56741D-4BK	Square Retainer Set, A4LD Valve Retainer (Square) (10 Per Set) (Sonnax)	1	
S56741D-4K	Retainer Pin Set, A4LD Valve Retainer Pin (L Shaped) (10 Per Set) (Sonnax)	1	
S56741E-1AK	Boost Valve Kit, 4R44E/4R55E/5R44E/5R55E (Valve & Sleeve) (With Increased Ratio) Sonnax	1	
S56741E-1K	Boost Valve Kit, 4R44E/4R55E/5R44E/5R55E (Valve & Sleeve) (With OEM Ratio) Sonnax	1	
S56741E-7	Index Spool, A4LD (Slips Over Manual Valve, Allows S-Clip To Be Attached) (Sonnax)	1	56947-01
44741G-5	Check Ball, A4LD/4R44E/4R55E/5R55E Valve Body (.250") (Torlon)	AR	
S56741JK	End Plug Kit, 4R44E/4R55E/5R55E Without O-Rings (Sonnax) (Contains: 1 Kick Downshift, 1 Throttle Downshift, 1 Manual)	1	
56741M-1	Manual Valve, A4LD	1	E8TZ-7C389-A

© Whatever It Takes Transmission Parts. Inc.

PART #	VALVE BODY COMPONENTS (Continued)	QTY.	REFERENCE #
56741NK	Throttle Kit, 4R44E/4R55E/5R55E (Use With The Correct Valve Body Plate #56747 & Gaskets #56320 & 56321)	1	3L5Z-7M203-JA
S56741P-1K	Pressure Regulator Kit, A4LD (Fixes Worn Valve Body Bore) Contains: Pressure Regulator Valve, 2 Springs, Boost Valve/Sleeve (Must Use Tool #T-56947-TL) (Sonnax)	1	
T-56947-TL	Reamer, A4LD Pressure Regulator Valve Bore Tool	1	
S56741P-3K	Spring Kit, 4R44E/4R55E/5R44E/5R55E (Main Pressure Regulator) (Elevatesd Pressure) (20 Springs Per Kit) (Sonnax)	1	
S56741PAK	Pressure Regulator Kit, 4R44E/4R55E/5R44E/5R55E (Sonnax) (Contains: 1 Sleeve, 1 Retaining Clip And 1 Spring) Must Use T-37947-TL5	1	
T-37947-TL5	Reamer Kit, 4R44E/4R55E/5R44E/5R55E Pressure Regulator Sleeve (Sonnax) (For S56741PAK)	1	
56741RK	Boost Valve & Sleeve, A4LD Reverse (Superior)	1	
56741RAK	Boost Valve & Sleeve, 4R55E/5R55E Reverse (Superior)	1	
44741V-5	Check Ball, A4LD/4R44E/4R55E/5R55E Valve Body (.250") (Steel)	AR	
56741VAK	EPC & Engagement Control Kit, 4R44E/4R55E/5R55E (Sonnax) (Must Use T-37947-TL11)	1	
T-37947-TL11	Reamer Kit, 4R44E/4R55E/5R55E (Sonnax) (For S56741VAK)	1	

PART #	HARDPARTS (Continued)	QTY.	REFERENCE #
56747A	Plate, C-3 Valve Body Seperator Plate 1974-87	1	
56747B	Plate, A4LD Valve Body Seperator Plate 1985-86	1	
56747BA	Plate, A4LD Valve Body Seperator Plate 1987-94	1	
56747C	Plate, 4R44E Valve Body Seperator Plate 1995-96 (W/EPC Blow Off Hole Eliminated) (Use W/D56741NK, D56320HA & D56321HA)	1	F5TZ-7A008-CA
56747CA	Plate, 4R44E Valve Body Seperator Plate (1997 2.3L/3.0L OHV Ranger/Aerostar) (W/EPC Blow-Off Hole Eliminated) Use W/D56741NK, D56320HA & D56321HA)	1	F77Z-7A008-AB
56747D	Plate, 4R55E/5R55E Valve Body Seperator Plate (1997 4.0L Ranger/Aerostar) (W/EPC Blow Off Hole Eliminated) (Use W/56741NK, D56320HA & D56321HA)	1	F77Z-7A008-CB
56747DA	Plate, 4R55E/5R55E Valve Body Seperator Plate (1997 Explorer/Mountaineer 4.0L OHV) (W/EPC Blow-Off Hole Eliminated) (Use W/D56741NK, D56320HA & D56321HA)	1	F77Z-7A008-DB
56747DB	Plate, 4R55E/5R55E Valve Body Seperator Plate (1997 Explorer/Mountaineer 4.0L SOHC) (W/EPC Blow-Off Hole Eliminated) (Use W/D56741NK, D56320HA & D56321HA)	1	F77Z-7A008-EB
56747E	Plate, 4R44E Valve Body Seperator Plate (1998-01 2.5L Ranger) (W/EPC Blow Off Hole Eliminated) W/Bonded Gaskets (Use W/D56741NK)	1	1L5Z-7Z490-DA
56747EA	Plate, 4R44E Valve Body Seperator Plate (1998-00 3.0L Ranger) (W/EPC Blow Off Hole Eliminated) W/Bonded Gaskets (Use W/D56741NK)	1	1L5Z-7Z490-EA
56747EB	Plate, 5R44E Valve Body Seperator Plate (2001-02 2.3L Ranger) (W/EPC Blow Off Hole Eliminated) W/Bonded Gaskets (Use W/D56741NK)	1	1L5Z-7Z490-AA
56747EC	Plate, 5R44E Valve Body Seperator Plate (2001-02 3.0L Ranger) (W/Epc Blow Off Hole Eliminated) W/Bonded Gaskets (Use W/D56741NK)	1	1L5Z-7Z490-BA
56747F	Plate, 4R55E/5R55E Valve Body Seperator Plate (1998-00 4.0L EI Ranger) (W/EPC Blow Off Hole Eliminated) W/Bonded Gaskets (Use W/D56741NK)	1	1L5Z-7Z490-FA
56747FA	Plate, 4R55E/5R55E Valve Body Seperator Plate (1998-00 4.0L EI Explorer) (W/EPC Blow Off Hole Eliminated) W/Bonded Gaskets (Use W/D56741NK)	1	1L5Z-7Z490-GA
56747FB	Plate, 4R55E/5R55E Valve Body Seperator Plate (1998-00 4.0L SOHC) (W/EPC Blow Off Hole Eliminated) W/Bonded Gaskets (Use W/D56741NK)	1	1L5Z-7Z490-HA
56747FC	Plate, 4R55E/5R55E Valve Body Seperator Plate (2001-02 4.0L SOHC) W/EPC Blow Off Hole Eliminated) W/Bonded Gaskets (Use W/D56741NK)	1	1L5Z-7Z490-CA
56750A	Bell Housing, C-3 (2.8L V-6)	1	
56750AB	Bell Housing, C-3 (4 Cylinder) (Top Bolts 4 1/4") 3 Bolt Starter (Cast # 74DT-7A834)	1	
56750AD	Bell Housing, C-3 (4 Cylinder) (Top Bolts 5 1/8") 3 Bolt Starter	1	
56750B	Bell Housing, A4LD (4 Cylinder) Hex Head Pump Bolts (3 Bolt Starter) 1985-87 (2 Top Bell Engine Bolts Are 4 1/4" Center To Center)(Cast # 85GT-7A834-AC)	1	
56750BA	Bell Housing, A4LD (4 cylinder) Allen Head Pump Bolts (3 Bolt Starter) 1988-Up (Top Bolts 4 1/4")	1	
56750C	Bell Housing, A4LD (4 Cylinder) Hex Head Pump Bolts (3 Bolt Starter) 1985-87 (2 Top Bell Engine Bolts Are 5 1/8") Bell Thickness From Front To Back is 6 1/2"	1	
56750CA	Bell Housing, A4LD (4 Cylinder) Allen Head Bolts (3 Bolt Starter) 1988-Up (2 Top Bell To Engine Bolts Are 5 1/8" Center To Center) Bell Thickness From Front To Back is 6 1/2"	1	
56750CB	Bell Housing, A4LD (4 Cylinder) Allen Head Bolts (3 Bolt Starter) 1988-Up (2 Top Bell To Engine Bolts Are 5 1/8" Center To Center) Bell Thickness From Front To Back is 6 7/8"	1	
56750D	Bell Housing, A4LD (2.8L, 2.9L, V-6) Hex Head Pump Bolts (2 Starter Bolts Are 4 1/8" Center To Center) 1985-87 (2 Top Bell To Engine Bolts Are 3 3/8" Center To Center)	1	
56750DA	Bell Housing, A4LD (2.8L/ 2.9L, V-6) Hex Head Pump Bolts (2 Starter Bolts Are 5 1/4" Center To Center) 1985-87 (2 Top Bell To Engine Bolts Are 3 3/8" Center To Center)	1	
56750DB	Bell Housing, A4LD (4.0L V-6) Hex Head Pump Bolts (2 Starter Bolts Are 5 1/4" Center To Center) 1985-87 (2 Top Bell To Engine Bolts Are 3 3/8" Center To Center) Cast #90GT-7A834	1	

FORD

© Whatever It Takes Transmission Parts. Inc.

56750DC	Bell Housing, A4LD (2.8L, 2.9L, V-6) Allen Head Pump Bolts (2 Starter Bolts Are 4 1/8" Center To Center)1988-94 (2 Top Bell To Engine Bolts Are 3 3/8" Center To Center)	1	
56750DD	Bell Housing, A4LD (2.8L, 2.9L, V-6) Allen Head Pump Bolts (2 Starter Bolts Are 5 1/4" Center To Center) 1988-94 (2 Top Bell To Engine Bolts Are 3 3/8" Center To Center) (Cast # 85GT-7A834-AA)	1	
56750DE	Bell Housing, A4LD (4.0L, V-6) Allen Head Pump Bolts (2 Starter Bolts Are 5 1/4" Center To Center) 1988-94 (Cast # 90GT-7A834-AA)	1	
56750E	Bell Housing, A4LD (3.0L V-6) Hex Head Pump Bolts (3 Bolt Starter) 1985-87 (2 Top Engine Bolts Are 4 3/4" Center To Center)	1	E79Z-7976-A
56750EA	Bell Housing, A4LD (3.0L V-6) Allen Head Pump Bolts (3 Bolt Starter) 1988-Up (2 Top Bell To Engine Bolts Are 4 3/4" Center To Center)	1	
56750G	Bell Housing, 4R44E (2.3L) (Top Bolts Are 4 1/4") 6 Bolt Pump 1995-96 (W/3 Bolt Starter) (Cast # 95GT-7A834-DC)	1	
56750H	Bell Housing, 4R44E (3.0L) (Top Bolts Are 4 3/4") 6 Bolt Pump 1995-96 (W/3 Bolt Starter) (Cast # 95GT-7A834-CB or 95GT-7976-CB)	1	
56750J	Bell Housing, 4R55E (4.0L) (Top Bolts Are 3 3/8") 6 Bolt Pump 1995-96 (W/2 Bolt Starter) (Cast # 95GT-7A834-BB)	1	
56750L	Bell Housing, 5R55E (4.0L) (Top Bolts Are 3 3/8") 6 Bolt Pump 1997-99 (Cast #97GT-7A834-AC)	1	
56750M	Bell Housing, 5R44E (2.3L) (Round Bell) 6 Bolt Pump 2000-Up (Square Starter Hole) (Cast #RF1L5P)	1	
56760	Case, C-3 1974-87	1	
56760A	Case, A4LD (Roller Type Sprag) (Uses A 1/4" Pipe Thread Cooler Fitting) 1985-95	1	E7TZ-7005-N
56760B	Case, A4LD (Roller Type Sprag) (Uses A 16.5mm Thread Cooler Fitting For A 22mm Wrench) 1985-94	1	
56760C	Case, A4LD 4.0L (Lug Type Sprag) L1989-94	1	F0TZ-7005-F
56760G	Case, 4R44E 2.3L & 3.0L (Roller Type Sprag) 1995-Up	1	
56760H	Case, 4R55E 4.0L (Lug Type Sprag) 1995-Up	1	
56760M	Case, 5R55E (Uses 1 Overdrive & 1 Output Sensor) 1997	1	
56760MA	Case, 5R55E (Uses 1 Output Speed Sensor) 1997-00	1	F77Z-7005-DB
56760MB	Case, 5R55E (No Sensors On Case) 1997-00	1	
56760MD	Case, 5R55E (Uses 1 ISS Sensor In Middle Of Case) 2001-Up (Also Uses 1 Output Speed Sensor On Rear Side Of Case)(Has 13mm Pan Bolt Heads)	1	1L5Z-7005-FA
56760ME	Case, 5R55E (Uses 1 ISS Sensor In Middle Of Case) 2001-Up (Also Uses 1 Output Speed Sensor On Rear Side Of Case)(Has 8mm Pan Bolt Heads)	1	

PART #	CASE COMPONENTS	QTY.	REFERENCE #
S56000-CS6	Crank Shaft Spacer, For 2.8L/2.9L/4.0" (With A4LD) (Sonnax) (6 Bolt)	1	
S56000-CS8	Crank Shaft Spacer, A4LD/4R44E/4R55E/5R44E/5R55E (8 Bolt)	1	
S56761-2CK	Sleeve, A4LD/4R44E/4R55E/5R55E Shift Linkage Shaft (W/1Sleeve, 1- 3mm Pin, 1- .125" Pin) Use With T-56361-TL (Sonnax)	1	
T-56361-TL	Tool Kit, For S56761-2CK	1	
S56761-2RS	Sleeve, C-3/A4LD/4R44E/4R55E/5R55E Rear Servo Bore (Presses In Case At Rear Servo Bore) Sell 56912-S Also (The Rear Servo Piston Must Be Machined For This Sleeve) (Sonnax)	1	
T-TK56RTD	Tool Kit, AOD/AODE/4R70W Shift Linkage Pin Remover & Installer (Teckpak)	1	
56761P-4	Manual Lever Pin, A4LD (E840125S)	1	E8401125-S

PART #	HARDPARTS (Continued)	QTY.	REFERENCE #
56765	Pan, C-3 1974-87	1	
56765A	Pan, A4LD 2WD 1985-88	1	
56765AA	Pan, A4LD 2WD 1989-Up	1	
56765AB	Pan, A4LD/4R44E/4R55E 4x4 1985-96	1	
56765G	Pan, 4R44E/4R55E 2WD (10mm Bolts) 1995-Up	1	
56765GA	Pan, 4R44E/4R55E 2WD (8mm Bolts) 1995-Up		
56765H	Pan, 4R44E/4R55E (10mm Bolts) 4x4 1997-Up	1	
56765HA	Pan, 4R44E/4R55E 4X4 (8mm Bolts) 1997-Up	1	
56770	Extension Housing, C-3 2WD (Speed-O Hole Is 5 3/4" From Rear Seal, On Drivers Side) 1974-87	1	
56770A	Extension Housing, C-3 2WD (Speed-O Hole Is 4 1/8" From Rear Seal, On Drivers Side) 1974-87	1	
56770B	Extension Housing, A4LD/4R44E/4R55E 2WD (Speed-O Hole Is 5 3/4" From Rear Seal, On Drivers Side) 1985-Up (Cast # 85GT-7A041-CA)	1	E5TZ-7A039-C
56770BA	Extension Housing, 4R44E/4R55E 2WD (Speed-O Hole Is 5 3/4" From Rear Seal, On Drivers Side) 1995-Up (Cast # 95GT-7A040-BAR)	1	
56770BC	Extension Housing, A4LD/4R44E/4R55E 2WD (No Speed-O Hole) 1990-Up	1	
56770C	Extension Housing, A4LD/4R44E/4R55E 4x4 (Cast # 85GT) 1985-Up	1	E5TZ-7A039-B
56770CA	Extension Housing, A4LD/4R44E/4R55E 4x4 (Cast # 90GT) 1990-Up	1	F0TZ-7A039-B

FORD

© Whatever It Takes Transmission Parts. Inc.

PART #	HARDPARTS (Continued)	QTY.	REFERENCE #
86774B	Speed-O Housing, A4LD/4R44E/4R55E (With 2 Pin Connector)(.871"OD Housing Below O-Ring) (Less Speed-O Driven Gear)(Does Not Use A Cable)	1	
26775	Converter Nut, A4LD/4R44E/4R55E/5R44E/5R55E Flange Type (Standard Thread)	1	
56776K	Bolt Set, A4LD Bell To Case	1	
56778K	Bolt Set, A4LD Pump To Bell (Hex Head)	1	
56778AK	Bolt Set, A4LD Pump To Bell (Allen Head)	1	
56778H	Bolt, 4R44E/4R55E/5R55E Pump To Case (Tork Head)	1	W701429-S309M
56778HK	Bolt Set, 4R44E/4R55E/5R55E Pump To Bell	1	
56778K	Bolt Set, A4LD Pump To Bell (Hex Head)	1	
56779K	Bolt Set, A4LD/4R44E/4R55E/5R55E Pan To Case (18)	1	
56781K	Bolt Set, A4LD/4R44E/4R55E/5R55E Extension Housing To Case	1	
56782E	Bolt, 4R44E/4R55E/5R55E/5R55E Holds Filter On	1	
56782K	Bolt Set, A4LD Valve Body	1	
56782HK	Bolt Set, 4R44E/4R55E/5R55E Valve Body	1	
56783E	Bolt, 4R44E/4R55E/5R55E Holds Input Speed Sensor To Center Support (Uses A Star Bit)	1	
56783K	Bolt & Nut Set, A4LD/4R44E/4R55E/5R55E Center Support (Allen Bolt)	1	
56790K	Bolt Set, A4LD Governor To Support	1	
56843	Bracket, A4LD (For Modulator)	1	
56843B	Bracket, 4R44E/4R55E/5R55E Holds Solenoid To Valve Body	1	XL4Z-7L491-AA
56853	Rubber Cushion, C-3/A4LD (.330" Thick) (Sets In Forward Piston 1974-89	1	D8ZZ-7B070-A
56853A	Rubber Cushion, A4LD/4R44E/4R55E (.299" Thick) (Sets In Forward Piston) 1990-95	1	F0TZ-7B077-A
56861	Snap Ring, A4LD/4R44E/4R55E/5R55E Holds Overdrive Clutch In Drum (.054") (Also Direct Drum)	1-2	E860126S
56861A	Snap Ring, A4LD/4R44E/4R55E/5R55E Holds Overdrive Clutch In Drum (.068") (Also Direct Drum)	1-2	E860127S
56861B	Snap Ring, A4LD/4R44E/4R55E/5R55E Holds Overdrive Clutch In Drum (.082") (Also Direct Drum)	1-2	E860128S
56861C	Snap Ring, A4LD/4R44E/4R55E/5R55E Holds Overdrive Clutch In Drum (.096") (Also Direct Drum)	1-2	E860129S
56862	Snap Ring, A4LD/4R44E/4R55E/5R55E Holds Overdrive Clutch Spring Retainer In Drum	1	E860125S
56868	Snap Ring, A4LD/4R44E/4R55E/5R55E Holds Overdrive Ring Gear To Hub	1	W702037-S
56876A	Snap Ring, C-3/A4LD/4R44E/4R55E/5R55E Holds Forward Clutch In Drum (.065")	1	
56876B	Snap Ring, C-3/A4LD/4R44E/4R55E/5R55E Holds Forward Clutch In Drum (.080")	1	
56877	Snap Ring, C-3/A4LD/4R44E/4R55E/5R55E Holds Forward Clutch Spring Retainer In Drum	1	
56878	Use 56861	1	
56879	Snap Ring, C-3/A4LD/4R44E/4R55E/5R55E Holds Direct Clutch Spring Retainer In Drum	1	
56881	Snap Ring, C-3/A4LD/4R44E/4R55E/5R55E Holds Hub To Front Planet	1	D4ZZ-7A480-A
56882	Snap Ring, C-3/A4LD/4R44E/4R55E/5R55E Holds Front Ring Gear To Hub	1	E860122-S
56883	Snap Ring, A4LD/4R44E/4R55E/5R55E Holds Center Support To Case	1	W702465-S300
56884	Snap Ring, C-3/A4LD/4R44E/4R55E/5R55E Holds Sun Gear In Shell	2	E860121-S
56887E	Snap Ring, 4R44E/4R55E/5R55E Holds Connector In Case	1	
56889	Snap Ring, C-3/A4LD/4R44E/4R55E/5R55E Holds Rear Hub To Rear Ring Gear	1	E806122-S
56890	Snap Ring, C-3/A4LD/4R44E Holds Rear Planet In Reverse Drum (Except 4.0L)(.060" Thick)	1	W702037-S300
56893	Snap Ring, C-3/A4LD/4R44E Holds Rear Sprag To Reverse Band Drum (Except 4.0L)	1	
56894	Snap Ring, C-3/A4LD Holds Rear Hub To Output Shaft (.046")	1	
56894A	Snap Ring, A4LD/4R44E/4R55E/5R55E Holds Rear Hub To Output Shaft (.077")	1	E860527-S
56896	Snap Ring, C-3/A4LD/4R44E/4R55E/5R55E Holds Intermediate & Overdrive Servo Cover In Case	1-2	E860343-S
56901	Spring, C-3/A4LD/4R44E/4R55E/5R55E Intermediate & Overdrive Servo	1-2	
56901A	Spring, C-3/A4LD/4R44E/4R55E/5R55E Intermediate & Overdrive Servo (Orange)	1-2	D4ZZ-7D028-A
56901AA	Spring, C-3/A4LD/4R44E/4R55E/5R55E Intermediate & Overdrive Servo (Yellow)	1-2	F0TZ-7D028-A
56901AB	Spring, C-3/A4LD/4R44E/4R55E/5R55E Intermediate & Overdrive Servo (Blue)	1-2	E0BZ-7D028-A
56901AC	Spring, C-3/A4LD/4R44E/4R55E/5R55E Intermediate & Overdrive Servo (Green)	1-2	E3TZ-7D028-A
56902AA	Piston, C-3/A4LD/4R44E/4R55E/5R55E Intermediate & Overdrive Servo (Molded) (1.625"ID) Cover Cast# FB) Piston Cast # 90GT-7E221-F1A	1-2	F0TZ-7D021-B
56902AB	Piston, C-3/A4LD/4R44E/4R55E/5R55E Intermediate & Overdrive Servo (Molded) (1.690"ID) Cover Cast# EB) Piston Cast # 90GT-7E221-B1A	1-2	F0ZZ-7D021-A
56902AC	Piston, C-3/A4LD/4R44E/4R55E/5R55E Intermediate & Overdrive Servo (Molded) (1.750"ID) Cover Cast# DB) Piston Cast # 90GT-7E221-D1A	1-2	F0TZ-7D021-A
56902AD	Piston, C-3/A4LD/4R44E/4R55E/5R55E Intermediate & Overdrive Servo (Molded) (1.812"ID) Cover Cast# CA/CB Piston Cast #	1-2	E3ZZ-7D021-A
56902AE	Piston, C-3/A4LD/4R44E/4R55E/5R55E Intermediate & Overdrive Servo (Molded) (1.920"ID) Cover Cast# BA/BB Piston Cast # 83DT-7E221-B1A	1-2	F2ZZ-7D021-A
56902AEHP	Piston, C-3/A4LD/4R44E/4R55E Interm & Overdrive Servo (Molded)(1.920" ID Cover)(Cover Cast # BA Or BB)(Piston Cast 83DT-7E221-B1A) (HI-Per Blue)	1-2	
56902AG	Piston, C-3/A4LD/4R44E/4R55E/5R55E Intermediate & Overdrive Servo (Molded) (2.075"ID) Cover Cast# AA/AB Piston Cast # 78DT-83DT-7E221-A1A/A2A	1-2	D4ZZ-7D021-A

FORD

© Whatever It Takes Transmission Parts. Inc.

56902AGHP	Piston, C-3/A4LD/4R44E/4R55E Interm & Overdrive Servo (Molded)(2.075"ID Cover) (Cover Cast #AA OR AB)(Piston Cast 78DT-83DT-7E221-A1A/A2A) (HI-Per Blue)	1-2	
56902AJ	Piston, C-3/A4LD/4R44E/4R55E/5R55E Intermediate & Overdrive Servo (Molded) (2.317"ID) Cover Cast# ZC Piston Cast # ZA)	1-2	F77Z-7D021-ZA
56902K	Servo & Cover, A4LD/4R44E/4R55E/5R55E (2.075) Servo Kit	1-2	
56904AA	Servo Cover, C-3/A4LD/4R44E/4R55E/5R55E Intermediate & Overdrive (1.625"ID Of Cover) Cast #FB	1-2	
56904AB	Servo Cover, C-3/A4LD/4R44E/4R55E/5R55E Intermediate & Overdrive (1.690"ID Of Cover) Cast #EB	1-2	
56904AC	Servo Cover, C-3/A4LD/4R44E/4R55E/5R55E Intermediate & Overdrive (1.750"ID Of Cover) Cast #DB	1-2	
56904AD	Servo Cover, C-3/A4LD/4R44E/4R55E/5R55E Intermediate & Overdrive (1.812"ID Of Cover) Cast #CA or CB	1-2	
56904AE	Servo Cover, C-3/A4LD/4R44E/4R55E/5R55E Intermediate & Overdrive (1.920"ID Of Cover) Cast #BA or BB	1-2	
56904AG	Servo Cover, C-3/A4LD/4R44E/4R55E/5R55E Intermediate & Overdrive (2.075"ID Of Cover) Cast #AA or AB	1-2	E2ZZ-7D052-A
56904AJ	Servo Cover, C-3/A4LD/4R44E/4R55E/5R55E Intermediate & Overdrive (2.310"ID Of Cover) Cast #ZC	1-2	F77Z-7D027-ZC
56910	Servo Assembly, C-3/A4LD/4R44E/4R55E/5R55E Reverse (1 Groove)	1	D7ZZ-7D189-C
56910A	Servo Assembly, C-3/A4LD/4R44E/4R55E/5R55E Reverse (2 Groove)	1	D7ZZ-7D189-A
56910B	Servo Assembly, C-3/A4LD/4R44E/4R55E/5R55E Reverse (No Groove)	1	D7ZZ-7D189-B
56910C	Servo Assembly, 4R44E/4R55E/5R55E Reverse (1 Groove) (No Spring)	1	
56911	Spring, C-3/A4LD/4R44E/4R55E/5R55E Reverse Servo	1	D4ZZ-7D031-A
56912	Piston, C-3/A4LD/4R44E/4R55E Reverse Servo (1 Groove)	1	
56912A	Piston, C-3/A4LD/4R44E/4R55E Reverse Servo (2 Groove)	1	
56912-S	Piston, C-3/A4LD/4R44E/4R55E/5R55E Reverse Servo (Machined For The Sonnax Sleeve #S56761-2RS)	1	
56914	Cover, C-3/A4LD/4R44E/4R55E/5R55E Reverse Servo	1	
56915	Band Strut Set, A4LD/4R44E/4R55E/5R55E Overdrive Band (Band Lever #A)	1	
56915A	Band Strut Set, A4LD/4R44E/4R55E/5R55E Overdrive Band (Band Lever #C)	1	
56915B	Band Strut Set, A4LD/4R44E/4R55E/5R55E Overdrive Band (Band Lever #D)	1	
56915C	Band Strut Set, A4LD/4R44E/4R55E/5R55E Overdrive Band (Band Lever #E)	1	
56915D	Band Strut Set, A4LD/4R44E/4R55E/5R55E Overdrive Band (Band Lever #G)	1	
56916	Band Strut Set, C-3/A4LD/4R44E/4R55E/5R55E Intermediate Band (Band Lever Cast # A)	1	
56916A	Band Strut Set, C-3/A4LD/4R44E/4R55E/5R55E Intermediate Band (Band Lever Cast # C)	1	
56916B	Band Strut Set, C-3/A4LD/4R44E/4R55E/5R55E Intermediate Band (Band Lever Cast # D)	1	
56916C	Band Strut Set, C-3/A4LD/4R44E/4R55E/5R55E Intermediate Band (Band Lever Cast # E)	1	
56916D	Band Strut Set, C-3/A4LD/4R44E/4R55E/5R55E Intermediate Band (Band Lever Cast # G)	1	
56916E-2	Strut, A4LD/4R55E/5R55E Intermediate Band (4.0L) Apply	1	
S56917-3K	Rear Band Anchor Pin Set, A4LD/4R44E/4R55E/5R55E (10 Pins & 1 Reamer) (Sonnax)	1	56521-K
26922	Nut, C-3/A4LD/4R44E/4R55E/5R55E Band Adjustment Nut (Coarse Threads)	1-2	380850-S
56961	Piston, A4LD Overdrive Drum (Lathe Cut Seal Type) 1985-87 (Cast # 74DT)(4 1/4"OD) (Also Fits A4LD/4R44E/4R55E/5R55E Direct Drum)	1-2	E8TZ-7A262-A
56961A	Piston, A4LD/4R44E/4R55E Overdrive Drum (Lip Seal Type) 1988-Up (Cast # 88DT & Some 74DT) (Also Fits A4LD/4R44E/4R55E/4R55E Direct Drum)	1-2	
56961B	Piston, A4LD/4R44E/4R55E/5R55E Direct Clutch (4 1/2"OD)(Lip Seal Type)(Cast # 90DT)	1	
56961C	Piston, 5R55E Overdrive Drum (Cast # 97GT)(4 7/8"OD) 1997-Up	1	
56964	Piston, C-3/A4LD/4R44E/4R55E/5R55E Forward Clutch	1	
56965	Piston, C-3 Direct Clutch 1974-87	1	F0TZ-7A262-B
56965A	Use 56861	1	
56965D	Piston, A4LD/4R44E/4R55E/5R55E Direct Drum (Cast # 90DT) 1985-Up (4 1/2"OD)	1	
56971	Spring, C-3/A4LD/4R44E/4R55E/5R55E Overdrive & Direct Clutch Return	20	F1TZ-7A480-B
56971K	Spring Kit, C-3/A4LD/4R44E/4R55E/5R55E Overdrive & Direct Clutch Return (20 Springs)	1	
56981	Retainer, A4LD/4R44E/4R55E Overdrive & Direct Drum Spring	1-2	ESTZ-7A527-A
56981A	Retainer, 5R55E Overdrive & Direct Drum Spring 1997-Up	1-2	
56984	Retainer, C-3/A4LD/4R44E/4R55E Forward Clutch Spring	1	
56985	Use 56981	1	
56991	Linkage, A4LD Internal With Park Rod (Kickdown Lever Is .370"OD)	1	E6TZ-7A247-A
56991-1	Lever W/Shaft, A4LD Kickdown (Internal)(.370"OD Shaft)	1	
56991A	Linkage, 4R44E/4R55E/5R55E Internal With Park Rod	1	
56991A-1	Lever W/Shaft, A4LD Kickdown (Internal)(.350"OD Shaft)	1	
56991B	Linkage, A4LD Internal W/Park Rod (Kickdown Lever Is .350"OD)	1	
56991BA-4	Shaft, 4R44E/4R55E/5R55E Manual Lever 1995-Up	1	
T-TK56RTD	Tool Kit, A4LD/4R44E/4R55E/5R55E Shift Linkage Pin Remover & Installer (Teckpak)	1	
56992AA	Lever With Shaft, A4LD Shift (External) Bronco II, Explorer & Ranger 1985-88	1	E5TZ-7A256-A
56992AB	Lever With Shaft, A4LD Shift (External) Aerostar 1985-91	1	E5TZ-7A256-B
56992AC	Lever With Shaft, A4LD Shift (External) Mustang 1987-93	1	F3ZZ-7A256-A
56992AD	Lever With Shaft, A4LD Shift (External) Thunderbird 1987-93	1	E7SZ-7A256-A
56992AE	Lever With Shaft, A4LD Shift (External) Explorer W/4.0L 1989-94	1	E9TZ-7A256-B

© Whatever It Takes Transmission Parts. Inc.

PART #	HARDPARTS (Continued)	QTY.	REFERENCE #
56992AG	Lever With Shaft, A4LD Shift (External) Aerostar 1992-94	1	F3TZ-7A256-B
56992BA	Lever W/Out Shaft, 4R44E/4R55E/5R55E Shift (External) 1995-Up	1	
56995	Park Pawl Assembly, A4LD/4R44E/4R55E/5R55E (Park Pawl Is .370” Thick)	1	
56995A	Park Pawl Assembly, A4LD/4R44E/4R55E/5R55E (Park Pawl Is .305” Thick)	1	
76996	Fitting, A4LD/4R44E/4R55E/5R44E/5R55E Cooler (1/4” Pipe Thread, Screw-in Pipe Thread Screws Into Case) (For A 5/16” Push-in Cooler Line)	2	
76996A	Fitting, A4LD/4R44E/4R55E/5R44E/5R55E Cooler (16.5mm Thread, Screw In Thread Screws Into Case) (For A 5/16” Push In Cooler Line) (Uses A 22mm Wrench)	2	

© Whatever It Takes Transmission Parts. Inc.

© Whatever It Takes Transmission Parts. Inc.

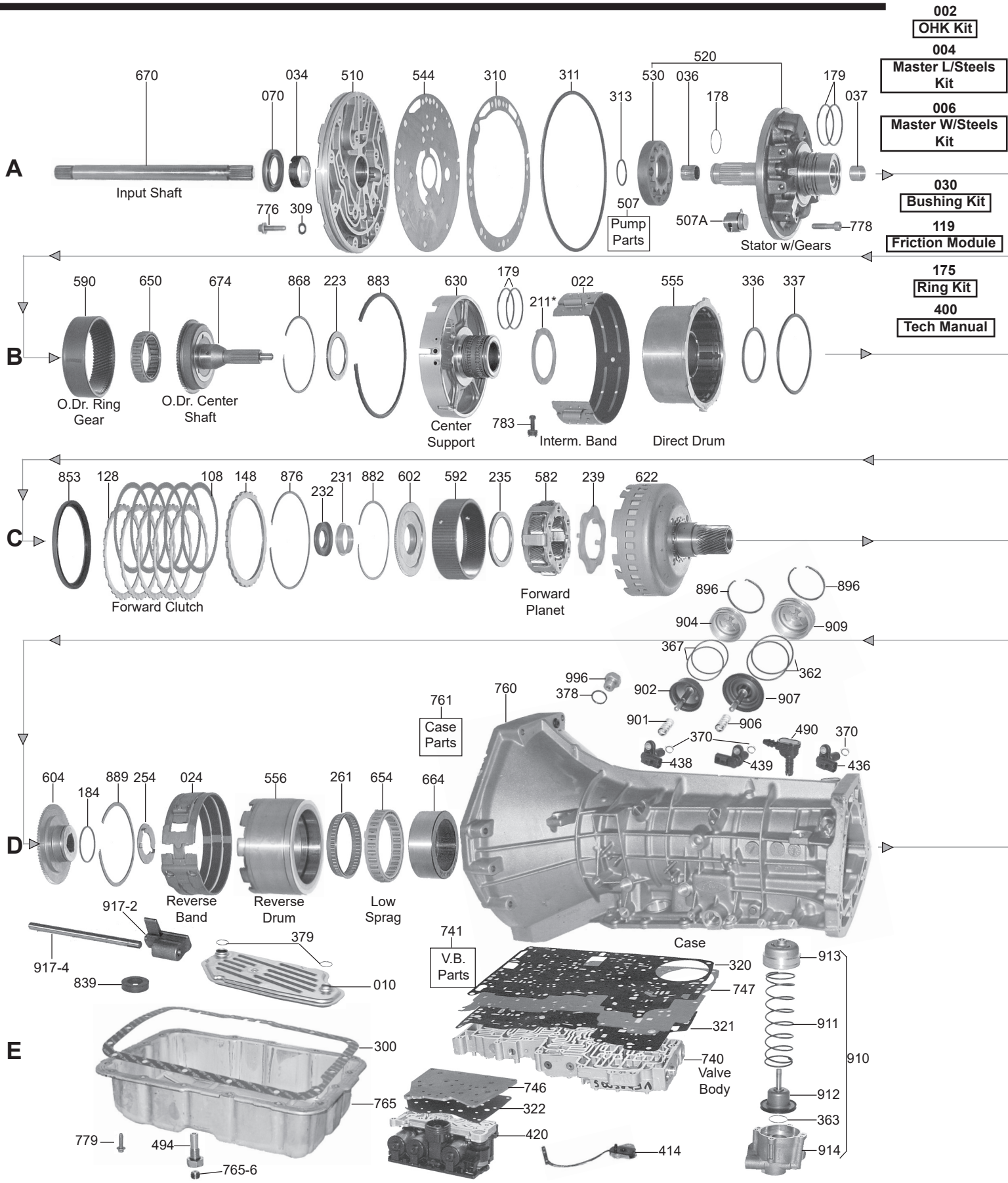

002 OHK Kit

004 Master L/Steels Kit

006 Master W/Steels Kit

030 Bushing Kit

119 Friction Module

175 Ring Kit

400 Tech Manual

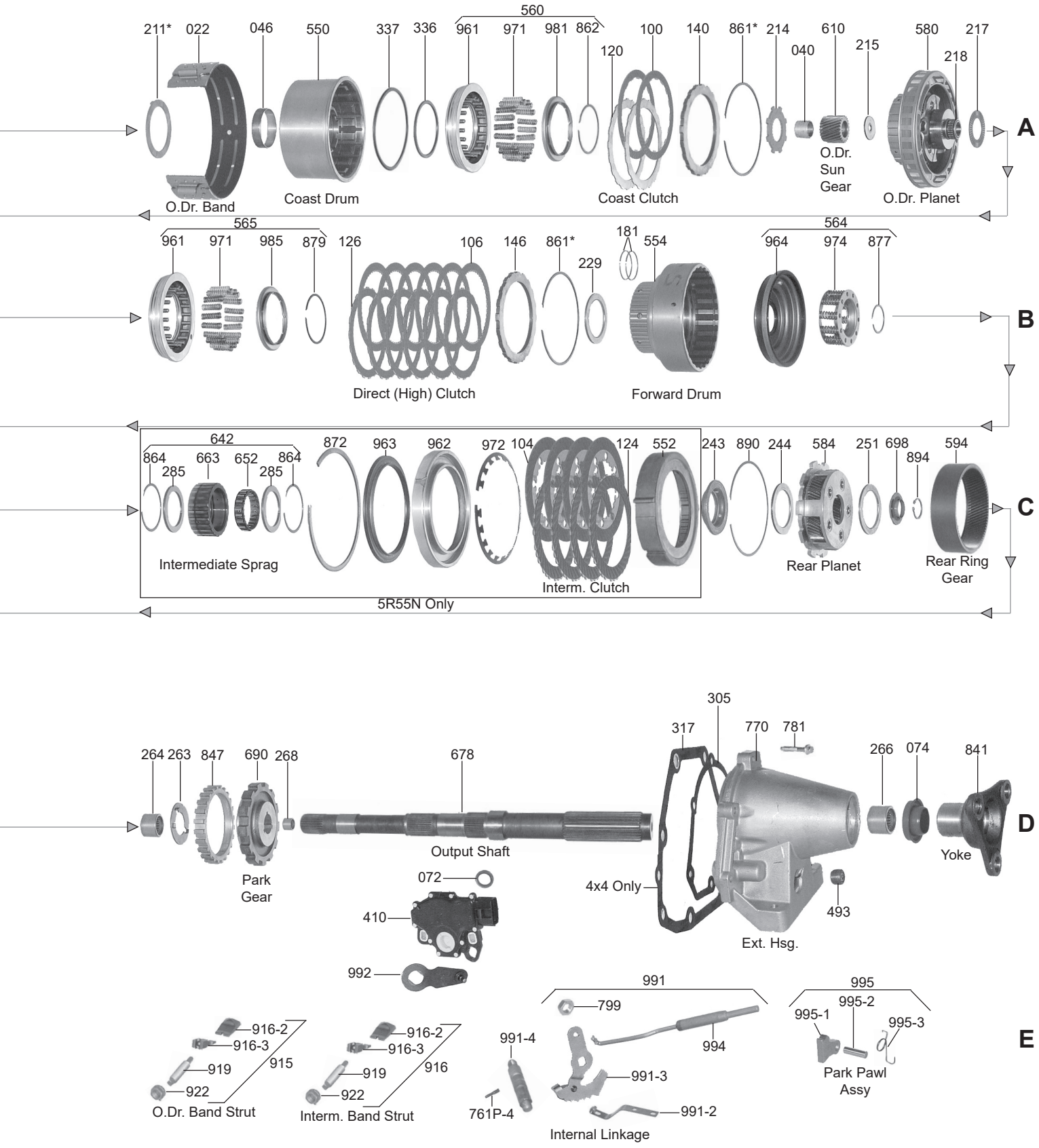

© Whatever It Takes Transmission Parts. Inc.

PART #	OVERHAUL KITS	QTY.	REFERENCE #
16002AP	Overhaul Kit, 5R55N (With Bonded Pistons) 1999-Up	1	
16002GP	Overhaul Kit, 5R55S/5R55W (With Bonded Pistons) 2002-Up (For Lincoln LS 2004-06 & Mustang GT Sell 16074A Also)	1	
16002GW	Overhaul Kit, 5R55S/5R55W (Without Bonded Pistons) 2002-Up	1	

PART #	MASTER L/STEEL KIT	QTY.	REFERENCE #
16004AP	Master L/Steels Kit, 5R55N (With Bonded Pistons) 1999-Up	1	
16004GP	Master L/Steels Kit, 5R55S/5R55W (With Bonded Pistons) 2002-07 (For Lincoln LS 2004-06 & Mustang GT Sell 16074A Also)	1	

PART #	MASTER W/STEEL KIT	QTY.	REFERENCE #
16006AP	Master W/Steels Kit, 5R55N (With Bonded Pistons) 1999-Up	1	
16006GP	Master W/Steels Kit, 5R55S/5R55W (With Bonded Pistons) 2002-07 (For Lincoln LS 2004-06 & Mustang GT Sell 16074A Also)	1	
16006GAP	Master W/Steels Kit, 5R55S (With Bonded Pistons)(With Double Sided Direct Frictions) 2008-Up (For Lincoln LS 2004-06 & Mustang GT Sell 16074A Also)	1	

PART #	FILTER	QTY.	REFERENCE #
16010A	Filter, 5R55N (3/8” Tall Pick-up Tube) 1999-Up	1	XW4Z-7A098BB
16010G	Filter, 5R55S/5R55W (2 1/4” Tall Pick-Up Tube) 2002-Up	1	1L2Z-7A098AC
16010GA	Filter, 5R55S/5R55W (1 1/16” Tall Pick-Up Tube) 2002-Up	1	3W4Z-7A098-AA

PART #	BANDS	QTY.	REFERENCE #
56022E	Band, 5R55N Intermediate & Overdrive (Flex) 1985-Up	2	
16022G	Band, 5R55S/5R55W Intermediate & Overdrive (Higher Energy) 2002-Up	2	1L2Z-7D034AA
16022GK	Bank, 5R55S/5R55W Intermediate & Overdrive (Pro Series) 2002-Up	2	
16024A	Band, 5R55N/5R55S/5R55W Rear Double Wrap (1.840” Wide Strapping) 1999-Up	1	XW4Z-7D095AA

PART #	BUSHINGS	QTY.	REFERENCE #
16030A	Bushing Kit, 5R55N/5R55S/5R55W 1999-Up	1	
56034B	Bushing, 5R55N/5R55S/5R55W Pump Cover 1999-Up	1	
56036A	Bushing, 5R55N/5R55S/5R55W Overdrive Sun Gear 1999-Up	1	
56036B	Bushing, 5R55N/5R55S/5R55W Stator (Front) 1999-Up	1	
56037	Bushing, 5R55N/5R55S/5R55W Stator (Rear) 1999-Up	1	
56046	Bushing, 5R55N/5R55S/5R55W Coast Clutch Drum 1999-Up	1	
16040A	Use 56036A.	1	
76066B	Bushing, 5R55S/5R55W 2WD Extension Housing 2002-Up (1.606”ID)(Bronze)	1	
76066BA	Bushing, 5R55S/5R55W 2WD Extension Housing 2002-Up (1.606”ID)(Babbit)	1	

PART #	METAL CLAD SEALS	QTY.	REFERENCE #
56070B	Seal, 5R55N/5R55S/5R55W Front (No Flange) (Rubber Coated) 1999-Up	1	F77Z-7A248AA
36072	Seal, 5R55N Linkage 1999-Up	1	D5AZ-7B498A
16074A	Seal, 5R55N/5R55S/5R55W Rear (2.360”OD) 1999-Up (Fits Lincoln LS 2004-06 & Mustang GT)	1	XW4Z-7052AA
76074B	Seal, 5R55S/5R55W Rear (W/Long Boot) 2WD 2002-Up	1	F6UZ-7052A
16074G	Seal, 5R55S/5R55W Extension Housing 4X4 (2.010”OD) 2002-Up	1	1L2Z-7052BA

PART #	FRICTION CLUTCH	QTY.	REFERENCE #
56100B	Friction, 5R55N/5R55S/5R55W Coast Clutch 1999-Up	2	F7ZZ-7B164CA
16104A	Friction, 5R55N Intermediate Clutch (1 Sided Friction) (24 Inner Teeth) (.098”) 1999-Up	4	XW4Z-7B164CA
16106A	Friction, 5R55N/5R55S/5R55W Direct Clutch (1 Sided)(.080”)(48 Internal Teeth) (4.857”OD) (High Energy Eclipse)1999-Up	5	XW4Z-7B164BA
16106G	Friction, 5R55S Direct Clutch (Double Sided) 2008-Up (Will Retro Fit 5R55N/5R55S/5R55W 1 Sided Friction, If You Use Five 16106G & Five 56120 Steels 1997-07)	5	
16106GHP	Friction, 5R55S Direct Clutch (Gen2)(Blue Plate)(4.892”OD)(48 Teeth)(.083”Thick) 2008-Up	5	
16108A	Friction, 5R55N/5R55S/5R55W Forward Clutch (.069”) (5.230”OD) (89 Teeth) 1999-Up	5	XW4Z-7B164AA
16119A	Friction Module, 5R55N 1999-Up	1	
16119G	Friction Module, 5R55S/5R55W 2002-Up	1	
16119GS1	Friction Module, 5R55S/5R55W (Stage 1) 2002-Up	1	

© Whatever It Takes Transmission Parts. Inc.

PART #	STEEL CLUTCH	QTY.	REFERENCE #
56120	Steel, 5R55S Direct Clutch (081") 2008-Up	5	
56120B	Steel, 5R55N/5R55S/5R55W Coast Clutch .065" 1999-Up	2	F0TZ-7B442B
16124A	Steel, 5R55N Intermediate (1 Sided Friction) (33 Outer Teeth) (.098") 1999-Up	4	XW4Z-7B442CA
16126A	Steel, 5R55N/5R55S/5R55W Direct (1 Sided Friction) (20 Outer Teeth) (.083") (4.00"ID) 1999-Up	5	XW4Z-7B442BA
16128A	Steel, 5R55N/5R55S/5R55W Forward Clutch (.065") (4.645"ID) (27 Teeth) 1999-Up	5	XW4Z-7B442AA

PART #	CLUTCH PRESSURE PLATES	QTY.	REFERENCE #
56140B	Pressure Plate, 5R55N/5R55S/5R55W Coast Clutch (.200")(& Direct Clutch) 1999-Up	1-2	F0TZ-7B066-B
16146A	Use 56140B	1	
16148A	Pressure Plate, 5R55N/5R55S/5R55W Forward Clutch (.155") (27 Teeth) (4.640"ID) 1999-Up	1	XW4Z-7B066-AA

PART #	SHIFT KITS	QTY.	REFERENCE #
T16165A	Shift Kit, 5R55N/5R55W 19995-Up (Transgo)	1	
T16171G	Shift Kit, 5R55S/5R55W (Hi Performance & Heavy Duty) 2002-Up (Transgo)	1	

PART #	OIL SEALING RINGS	QTY.	REFERENCE #
16175A	Ring Kit, 5R55N/5R55S/5R55W 1999-Up (Metal & Hard Plastic)	1	
56178AT	Ring, 5R55N/5R55S/5R55W Stator (Front, Solid)(Torlon) 1999-Up	1	
56181LT	Ring, 5R555N/5R55S/5R55W Forward Clutch (1.576"OD) (Peek)	2	

PART #	WASHERS & BEARINGS	QTY.	REFERENCE #
16211AA	Bearing W/Races, 5R55N/5R55S/5R55W Center Support To Direct Drum (.110" Thick) (3.515"OD) 1999-Up	2	
16211AB	Bearing W/Races, 5R55N/5R55S/5R55W Center Support To Direct Drum (.116" Thick) (3.515"OD) 1999-Up	2	
16211AC	Bearing W/Races, 5R55N/5R55S/5R55W Center Support To Direct Drum (.124" Thick) (3.515"OD) 1999-Up	2	
16211AD	Bearing W/Races, 5R55N/5R55S/5R55W Center Support To Direct Drum (.132" Thick) (3.515"OD) 1999-Up	2	
56211AA	Washer, 5R55N/5R55S/5R55W Pump To Coast Clutch Drum .047" (Plastic) 1999-Up	1	
56211BA	Washer, 5R55N/5R55S/5R55W Pump To Coast Clutch Drum .055" (Plastic) 1999-Up	1	F7TZ-7D014VA
56211CA	Washer, 5R55N/5R55S/5R55W Pump To Coast Clutch Drum .063" (Plastic) 1999-Up	1	F7TZ-7D014TA
56211DA	Washer, 5R55N/5R55S/5R55W Pump To Coast Clutch Drum .067" (Plastic) 1999-Up	1	
56211EA	Washer, 5R55N/5R55S/5R55W Pump To Coast Clutch Drum .071" (Plastic) 1999-Up	1	F7TZ-7D014MA
56211GA	Washer, 5R55N/5R55S/5R55W Pump To Coast Clutch Drum .075" (Plastic) 1999-Up	1	F7TZ-7D014NA
56211HA	Washer, 5R55N/5R55S/5R55W Pump To Coast Clutch Drum .079" (Plastic) 1999-Up	1	F7TZ-7D014PA
56211JA	Washer, 5R55N/5R55S/5R55W Pump To Coast Clutch Drum .083" (Plastic) 1999-Up	1	F7TZ-7D014RA
56211KA	Washer, 5R55N/5R55S/5R55W Pump To Coast Clutch Drum .087" (Plastic) 1999-Up	1	F7TZ-7D014SA
56211LA	Washer, 5R55N/5R55S/5R55W Pump To Coast Clutch Drum .094" (Plastic) 1999-Up	1	
56211MA	Washer, 5R55N/5R55S/5R55W Pump To Coast Clutch Drum .102" (Plastic) 1999-Up	1	
56211NA	Washer, 5R55N/5R55S/5R55W Pump To Coast Clutch Drum .110" (Plastic) 1999-Up	1	
16214A	Washer, 5R55N/5R55S/5R55W Overdrive Sun Gear To Overdrive Drum (24 Teeth Sun Gear) (.420" Wide Lugs) 1999-Up	1	
16214AA	Washer, 5R55N Overdrive Sungear To Overdrive Drum (24 Teeth Sun Gear) (.320" Wide Lugs)	1	YW4Z-7660AA
16214G	Washer, 5R55S/5R55W Overdrive Sungear To Overdrive Drum (38 Teeth Sun Gear) (.320" Wide Lugs) 2002-Up	1	2L2Z-7660-AA
16215G	Bearing W/Races, 5R55S/5R55W Overdrive Sun To Overdrive Planet 2002-Up	1	
56217	Bearing, 5R55N/5R55S/5R55W Overdrive Planet to Overdrive Center Shaft 1999-Up	1	E5TZ-7L495A
56223B	Bearing W/Races, 5R55N/5R55S/5R55W Overdrive Center Shaft To Center Support 1999-Up (Also Direct Drum To Forward Drum, Shell To Rear Planet, & Rear Planet To Hub)	1-4	F77Z-7M153-EB
16229A	Use 56223B	1	
16231A	Use 56232C	1	
16232A	Bearing W/Races, 5R55N/5R55S/5R55W Forward Drum To Hub (1.950"OD) 1999-Up	1	1L2Z-7D234-AA
56232C	Washer, 5R55N/5R55S/5R55W Bearing to Forward Hub (Solid Bronze) 1999-Up	1	FOTZ-7D090A
16235A	Bearing W/Races, 5R55N/5R55S/5R55W Front Planet To Hub 1999-Up	1	XW4Z-7F374AA
16239A	Washer, 5R55N/5R55S/5R55W Front Planet To Shell (2.390"ID) (.100" Thick) Plastic (6 Fingers) 1999-Up	1	
16243A	Collar, 5R55N Intermediate (2.990"OD) (.518" Thick) (4 Holes) 1999-Up	1	XW4Z-7C167-AA
16243G	Spacer, 5R55S/5R55W Shell To Rear Planet 2002-Up	1	1L2Z-7C167-AA
16244A	Use 56223B	1	
16251A	Use 56223B	1	
96235	Bearing W/Races, 5R55N/5R55S/5R55W Rear Hub To Race #254 (.141" Thick)(1.960"OD)	1	

© Whatever It Takes Transmission Parts. Inc.

PART #	WASHERS & BEARINGS (Continued)	QTY.	REFERENCE #
16261A	Caged Needle Bearing, 5R55N/5R55S/5R55W Rear Drum To Low Sprag (52 Needles) 1999-Up	1	
56263	Washer, 5R55N/5R55S/5R55W Parking Gear To Case 1999-Up	1	D4ZZ-7B368-A
16264A	Caged Needle Bearing, 5R55N/5R55W Case To Output Shaft 1999-Up (F-222722)	1	F77Z-7R205AA
16266A	Caged Needle Bearing, 5R55N Extension Housing 1999-Up	1	
56268	Caged Needle Bearing, 5R55N/5R55S/5R55W Output Shaft (Front)	1	
16285A	Washer, 5R55N Intermediate Sprag Side 1999-Up	2	

PART #	GASKETS & RUBBER COMPONENTS	QTY.	REFERENCE #
16300AW	Gasket, 5R55N Bottom Pan (Plastic With Silicon Bead) OE Style (With Large Holes) 1999-Up	1	XW4Z-7A191CA
16300GW	Gasket, 5R55S/5R55W Bottom Pan (Metal With Silicon Bead) OE Style (With Small Holes) 2002-Up (When Out Use 16300AW)	1	1L2Z-7A191BA
16305A	Gasket, 5R55N/5R55S/5R55W (2WD) Extension Housing To Case 1999-Up (Also Fits 5R55S/5R55W 4x4 Case To Rear Seal Housing) (On 4x4 Units This Is The Inner Gasket, The Outer Gasket Is M368317E)	1	XW4Z-7086-AA
M368317E	Gasket, 5R55S/5R55W Case To Transfer Case (Outer Gasket)	1	
44309	Gasket, 5R55N/5R55S/5R55W Pump Bolt Washer	AR	
16310A	Gasket, 5R55N/5R55S/5R55W Pump 1999-Up	1	XW4Z-7A136AB
16311A	O-Ring, 5R55N/5R55S/5R55W Pump Cover 1999-Up	1	XW4Z-7A248AA
56313A	O-Ring, 5R55N Inner Pump Gear 1999-Up	1	F77Z-7L323AA
16320A	Gasket, 5R55N Valve Body Seperator Plate To Case 1999-Up	1	
16320G	Gasket, 5R55S/5R55W Valve Body Seperator Plate To Case (Upper) 2002-Up	1	
16320GA	Gasket, 5R55S/5R55W Valve Body Seperator Plate To Case (Upper) 2009-Up	1	
16320GK	Bonded Plate/Gasket, 5R55S/5R55W Valve Body Seperator Plate (With Bonded Gaskets) (Code #01) 2002-Up	1	
16321A	Gasket, 5R55N Valve Body To Seperator Plate 1999-Up	1	
16321G	Gasket, 5R55S/5R55W Valve Body To Seperator Plate (Lower) 2002-08	1	
16321GA	Gasket, 5R55S/5R55W Valve Body To Seperator Plate (Lower) 2009-Up	1	
56336A	Lip Seal, 5R55N/5R55S/5R55W Direct & Coast Clutch (Inner) 1999-Up	2	
56337AA	Lip Seal, 5R55N/5R55S/5R55W Overdrive Clutch (Outer) 1997-05	1	
16362A	O-Ring, 5R55N/5R55S/5R55W Intermediate Servo Cover (Takes 2) 1999-Up	2	
16363G	D-Ring, 5R55S/5R55W Reverse Servo Housing To Piston 2002-05	1	
16367A	O-Ring, 5R55N/5R55S/5R55W Overdrive Servo Cover (Takes 2) 1999-Up	2	
16379A	O-Ring, 5R55N Filter (Large) 1999-02	1	
16379AA	O-Ring, 5R55N Filter (Small) 1999-02	1	
16379G	O-Ring, 5R55S/5R55W Filter (Large) 2002-Up	1	
16379GA	O-Ring, 5R55S/5R55W Filter (Small) 2002-Up	1	

PART #	TECHNICAL MANUALS	QTY.	REFERENCE #
16400A	Technical Manual, 5R55N 1999-Up (ATSG)	1	5R55N
A16400C	Rebuild Manual, 5R55N/5R55S/5R55W Rebuild Procedures (ATRA)	1	
16400G	Technical Manual, 5R55S/5R55W 2002-Up	1	5R55S/5R55W

PART #	ELECTRICAL COMPONENTS	QTY.	REFERENCE #
16410A	Switch, 5R55N Trans Range (TRS) (12 Prong Connector) 1999-Up (Use 16410G)	1	XW4Z-7F293AA
16410G	Switch, 5R55S/5R55W Trans Range (TRS)(11 Prong Connector) 2002-Up (Cast # 5W4P-7F293-AA)(Retro Fits 16410A) (Connector Faces To The Front Of The Transmission)(Has A Bolt Slot With Out A Metal Sleeve Next To The Connector)	1	1L2Z-7F293AA
16410GA	Switch, 5R55S/5R55W W/Trans Range (TRS)(11 Prong Connector) 2002-Up (Cast # 1L2P-7F293-AB or 3L2P-7F293-AA)(Connector Faces To The Rear Of The Transmssion) (Has A Metal Sleeve In The Bolt Slot Closest To The Connector)	1	
16414A	Switch, 5R55N Reverse Pressure 2000-Up	1	XW4Z-7E440AA
16420A	Solenoid Assembly, 5R55N (12 Pin) 1999-Up (Some Jaguar 1999-02)(Has Electrical Connector That The 16420G & 16420GB Does Not Have)	1	XW4Z-7G391AC
16420G	Solenoid Assembly, 5R55S/5R55W (12 Pin Connector) 2002-03 (To ID Look For The Solid Brackets On The Solenoids)	1	1L2Z-7G391AE
16420GB	Solenoid Assembly, 5R55S/5R55W (12 Pin Connector) 2004-Up (To ID Look For The Slotted Brackets On The Solenoids)	1	4L2Z-7G391-AA
16436A	Use 16438A.	1	
16438A	Sensor, 5R55N/5R55S/5R55W Input Speed (Cast #XW4P-7H103AA) Also Fits 5R55N / 5R55W Output And 5R55S/5R55W Intermediate Speed Sensor 1999-Up	1-3	XW4Z-7H103AA
16439G	Use 16438A.	1	
16439H	Sensor, 5R55N Intermediate Shaft Speed (Cast #XW4P-7M183AA) W/6 Ribs On Tip 1999-Up	1	XW4Z-7M183AA
F85Z-2L373AB	Speed Sensor, Rear Axle Housing (Output Speed) 1990-97 Aerostar, 1990 Bronco II, 1990-06 E-150/250/350, 1990-03 F-150, 1991-01 Expedition/Mountaineer, 1990-99 F250, 1999-04 SD F250-F450, 2000-06 Excursion, 1990-03 Ranger, 2000-01 Sporttrac, 1997-02 Expedition	1	

© Whatever It Takes Transmission Parts. Inc.

16445GK ..... Repair Kit, 5R55N/5R55S/5R55W External Harness 2002-Up ..... 1 .....

PART #	MISC. COMPONENTS	QTY.	REFERENCE #
16493A	Fill Plug, 5R55N/5R55S/5R55W (Screw In) (Allen Head Type) (.670"OD) 1999-Up	1	
16494A	Drain Plug, 5R55N/5R55S/5R55W Oil Pan (1.420" Overall Length) 1999-Up (Comes With The Fluid Level Check Plug #D16765A-6)	1	6L2Z-7A010-AA
T16494A	Repair Nut, 5R55N/5R55S/5R55W Oil Pan Drain Plug (Teckpak)	1	
16494AA	Drain Plug, 5R55N/5R55S/5R55W Oil Pan (1.855" Overall Length) 1999-Up	1	
16507A	Valve, 5R55N/5R55S/5R55W Line Pressure Relief (1.085"OD) 1999-Up	1	XW4Z-7H411-A
S16507AK	Valve Kit, 5R55N/5R55S/5R55W Line Pressure Relief (With O-Rings) (Contains: O-Ring, Canister, Valve & Spring) (Sonnax)(Pump Flow Control)	1	
A16507A-1	Valve, 5R55N/5R55W/5R55W Line Pressure Relief (With O-Ring)	1	
S16507A-8	O-Ring, 5R55N/5R55S/5R55W For The S16507AK	1	
T-0519	Flex Plate Aligner, 5R55N/5R55W (Use With FM79HS)	1	
T-0519-A	Flex Plate Aligner, 5R55N/5R55W Aluminum With Replacement Bushign (Use With FM79HS)	1	

PART #	HARD PARTS	QTY.	REFERENCE #
16500A	Pump Assembly, 5R55N/5R55S/5R55W (Fits A 24 Tooth And 38 Tooth Overdrive Sun Gear)	1	
16510A	Pump Body, 5R55N/5R55S/5R55W (8 Bolt) Aluminum (RFXW4P-7B325-AA and D04YA-MA4) 1999-Up	1	
16520A	Stator, 5R55N/5R55S/5R55W (With Gears)(Cast # XW4P-70043) 1999-Up (Fits A 24 Teeth & 38 Teeth Overdrive Sun Gear)	1	
T-16520A	Pump Alignment Tool, 5R55N/5R55S/5R55W (We Have This Made Special For Us)	1	
16530A	Pump Gear Set, 5R55N/5R55S/5R55W (.610" Thick) (11 Teeth & 13 Teeth) 1999-Up	1	
16544A	Pump Plate, 5R55N/5R55S/5R55W (8 7/8"OD) Has A 3/4" Hole Off Center 1999-Up	1	1L2Z-7B472-AA
16550A	Drum, 5R55N/5R55S/5R55W Coast Clutch (2 Clutch) Cast Iron (8 Notches) (.420" Wide Lugs For #214 Drive Washer) 1999-Up	1	XW4Z-7L669AA
16550G	Drum, 5R55S/5R55W Coast Clutch (2 Clutch) Cast Iron (8 Notches) (.320" Wide Lugs For #214 Drive Washer) 2002-Up	1	
16552A	Drum, 5R55N Intermediate 1999-Up	1	XW4Z-7F340AA
16554A	Drum, 5R55N/5R55S/5R55W Forward Clutch (5 Clutch)(Cast # 1L2P-7A511-GB)(Uses A Molded Rubber Piston) 1999-Up	1	1L2Z-7A360-AA
16554AA	Drum, 5R55N Forward Clutch (5 Clutch)(Cast # XWA-7A511-DD)(Uses An Aluminum Piston) 1999-Up	1	
16555A	Drum, 5R55N/5R55S/5R55W Direct (5 Clutch) (1/2" From Snap Ring Groove To Edge Of Drum) 1999-Up	1	1L2Z-7D044-CA
16555AA	Drum, 5R55N/5R55S/5R55W Direct (4 Clutch) (5/8" From Snap Ring Groove To Edge Of Drum) 1999-Up	1	
16556A	Drum, 5R55N/5R55S/5R55W Rear (10 Lugs) W/Low Sprag (30 Lug, Plastic Cage) (Drum Cast # BWK XW4P-7E193-AA) 1999-Up	1	XW4Z-7C498AA
16560A	Use 56565D	1	
16564A	Piston Kit, 5R55N/5R55S/5R55W Forward Clutch (Bonded) 1999-Up	1	
16564AA	Piston Kit, 5R55N Forward Clutch (Aluminum)(Cast # XW4P-7A262-AA)	1	
56565D	Piston Kit, 5R55N/5R55S/5R55W Direct & Coast Clutch Drum (Cast #90D) 1999-Up	2	
16580A	Planet, 5R55N/5R55S/5R55W Overdrive (24 Teeth Sun Gear) (W/Double Reluctor Ring & Hollow Pins) 1999-Up (Bearing Between Planet & Sung Gear Stays In Planet)	1	XW4Z-7B446BA
16580AC	Planet, 5R55N/5R55S/5R55W Overdrive (24 Teeth Sun Gear)(With Double Reluctor Ring) 1999-Up (This Is A 56580A Converted To A 16580A Planet)	1	
16580AK	Planet Kit, 5R55N/5R55S/5R55W (24 Teeth Sun Gear) 1999-Up (Contains: # 550, 214,610,580, 217, 590, 650, 674 & 883)	1	
16580A-9	Reluctor Ring, 5R55N/5R55S/5R55W (Goes On Overdrive Planet)(Can Use This On A 56580A Planet To Make It Fit A 5R55N/5R55S/5R55W)	1	
16580G	Planet, 5R55S/5R55W Overdrive (38 Teeth Sun Gear) (W/Double Reluctor Ring & Hollow Pins) 2002-Up (Bearing Between Planet & Sun Gear Comes Out Of Planet & Does Not Come With Planet) (Bearing Is # 16215G)	1	2L2Z-7B446-AA
16580G-1K	Washer, 5R55N/5R55S/5R55W Overdrive Plant Pinion (38 Tooth Sun Gear)	1	
16580GK	Planet Kit, 5R55S/5R55W (38 Teeth Sun Gear) 2002-Up (Contains: # 550,214,610,580,590, & 674)	1	
16582A	Planet, 5R55N Forward (6 Gear) (Uses 47 Teeth Sun Gear) (Cast # RFXW4P-70055-EB) 1999-Up	1	YW4Z-7A398AA
16582AAK	Planet Kit, 5R55N Forward (6 Gear)(Uses A 55 Teeth Sun Gear) 1999-Up (Contains: #602G, 592G, 582G, 622AA)	1	
16582G	Planet, 5R55S/5R55W Forward (6 Gear) (Uses 55 Teeth Sun Gear) (Cast # RF1L2P-7D055-DA) 2002-Up	1	2L2Z-7A398-AA
16582GK	Planet Kit, 5R55S/5R55W Forward (6 Gear) (Uses A 55 Tooth Sun Gear) 2002-Up (Contains: # 602, 592, 582, 622)	1	
16584A	Planet, 5R55N Rear (5 Gear) 2 Piece Housing (1/5 Cast, 1/2 Steel) Can Use 16584G (Cast #RFXW4P-7D007-AA)	1	XW4Z-7D006AA

© Whatever It Takes Transmission Parts. Inc.

PART #	HARD PARTS (Continued)	QTY.	REFERENCE #
16584G	Planet, 5R55S/5R55W Rear (5 Gear) 10 Lug (1 Piece Steel Housing (Can Use 16584A) 2002-Up	1	1L2Z-7D006BA
56590B	Ring Gear, 5R55N/5R55S/5R55W Overdrive Planet (Used With Plastic Caged Sprag) (Uses 24 Teeth Sun Gear) 1999-Up	1	F3TZ-7A153-A
16590G	Ring Gear, 5R55S/5R55W Overdrive Planet (Used With Plastic Caged Sprag) (Uses 38 Teeth Sun Gear)	1	2L2Z-7A153-AA
16592A	Ring Gear, 5R55N Forward Planet (85 Teeth) (89 Clutch Splines) 1999-Up	1	YW4Z-7D392AA
16592G	Ring Gear, 5R55S/5R55W Forward Planet (101 Teeth) (89 Clutch Splines)	1	4L2Z-7D392-AA
16594A	Ring Gear, 5R55N Rear Planet (83 Teeth) (1.393" Thick) 1999-Up	1	XW4Z-7A153AA
16602A	Hub, 5R55N Forward Ring Gear (1.585"ID) (85 Teeth) Steel 1999-Up	1	
16604A	Hub, 5R55N/5R55S/5R55W Rear Ring Gear (83 Teeth) (2.050" Neck OD) 1999-Up	1	XW4Z-7B067-AA
56610	Sun Gear, 5R55N/5R55S/56R55W Overdrive (24 Teeth) 1985-Up	1	F7RZ-7D063-AA
16610G	Sun Gear, 5R55S/5R55W Overdrive (38 Teeth) 2001-Up	1	2L2Z-7D063-AA
16622A	Shell, 5R55N/5R55S/5R55W With Sun Gear (6 1/4"OD) (27 Teeth /47 Teeth) 32 Sensor Holes (Has A Bearing Inside)	1	2W4Z-7A019AA
16622AA	Shell, 5R55N/5R55S/5R55W With Sun Gear (6 1/4"OD) (27 Teeth/55 Teeth) 32 Sensor Holes (Has A Bearing Inside)	1	YW4Z-7A019-AA
16622G	Shell, 5R55N/5R55S/5R55W With Sun Gear (6 1/4"OD) (27 Teeth / 55 Teeth) 32 Sensor Holes (No Bearing Inside)	1	4L2Z-7A019-AA
16630A	Center Support, 5R55N/5R55S/5R55W (Has A Caged Bearing In Ring Area) 1999-Up (Does Not Use A Speed Sensor)(Can Use 56630C)	1	
56630C	Center Support, 5R55N/5R55S/5R55W (Has A Caged Bearing In Ring Area) (With Speed Sensor Hole)(With Or Without Sensor)	1	

PART #	SPRAGS & ONE WAY CLUTCHES	QTY.	REFERENCE #
16642A	Sprag Assembly, 5R55N Intermediate 1999-Up	1	XW4Z-7A089-CA
56650C	Sprag, 5R55N/5R55S/5R55W Overdrive (.460" Wide Lugs) (Plastic Cage) With Brass Washer On One Side	1	F7TZ-7A089-AB
16652A	Sprag Element, 5R55N Intermediate 1999-Up	1	
16654A	Sprag Element, 5R55N/5R55S/5R55W Low (30 Lugs)(Plastic Cage) 1999-Up (Use 16556A)	1	

PART #	HARD PARTS (Continued)	QTY.	REFERENCE #
16663A	Outer Race, 5R55N Intermediate Sprag 1999-Up	1	
16664A	Inner Race, 5R55N/5R55S/5R55W Rear Sprag (Press-In) (3.310"OD) (1.215" Thick) 1999-Up	1	
56670B	Input Shaft, 5R55N (10" Long) 1990-Up	1	XL2Z-7017-AA
16670G	Input Shaft, 5R55S/5R55W (10 1/4" Long) 2001-Up	1	
56674C	Center Shaft, 5R55N/5R55S/5R55W Overdrive (Uses 24 Teeth Sun Gear) 1997-Up	1	XL2Z-7A658-AA
56674CK	Center Shaft Assembly, 5R55N/5R55S/5R55W Overdrive (Uses 24 Teeth Sungear)(Contains: # 56674C, 56590B & 56650C)	1	
16674G	Center Shaft, 5R55S/5R55W Overdrive (Uses 38 Teeth Sun Gear) 2002-Up	1	2L2Z-7A658-AA
16674GK	Center Shaft Assembly, 5R55S/5R55W Overdrive (Uses 38 Teeth Sungear) 2002-Up (Contains: 16674G, 16590G & 56650C)	1	
16678A	Output Shaft, 5R55N 2WD (15 1/4" Long) (Bolt-On Yoke Type) 1999-Up	1	YW4Z-7060BA
16678G	Output Shaft, 5R55S/5R55W 2WD (15 1/2" Long) 2002-Up	1	1L2Z-7060BA
16678GB	Output Shaft, 5R55S/5R55W 4x4 2002-Up	1	IL2Z-7060AA
16690A	Park Gear, 5R55N/5R55S/5R55W (13 Lugs) (Uses A Press-On Pick-Up Reluctor Wheel) 1999-Up	1	
166960AA	Park Gear, 5R55N (13 Lugs) Has A 24 Lug Pick-Up Reluctor Wheel That Is Welded To The Park Gear	1	
16698A	Oil Dam, 5R55N/5R55S/5R55W Rear Planet (1.737"OD) (.355" Thick) 1999-Up	1	XW4Z-7B176AA
16699A	Oil Baffle, 5R55N/5R55S/5R55W Overdrive Planet (Front) Stays In Planet (Aluminum & Plastic) 3.572"OD (2.700"ID) 1999-Up	1	
16740A	Valve Body, 5R55N (Without Solenoids) (Cast # RFXW4P-7A101-AF)	1	
16740AA	Valve Body, 5R55N (Without Solenoids) (Cast # RFXW4P-7A101-AH	1	
16740AC	Valve Body, 5R55N (Without Solenoids) (Cast # RFXW4P-7A101-AJ)	1	XW4Z-7G391AC
16740G	Valve Body, 5R55S/5R55W (Without Solenoids) (Cast # RF1L2P-7A101-EA, FA Or GA)	1	1L2Z-7A100BA
16740GB	Valve Body, 5R55S/5R55W (Without Solenoids) (Cast # RF5L2P-7A101-CA)	1	
16740GC	Valve Body, 5R55S/5R55W (Without Solenoids) (Cast # RF9L2P-7A101-AA) 2009-Up	1	

PART #	VALVE BODY COMPONENTS	QTY.	REFERENCE #
S16741-6K	End Plug Kit, 5R55S/5R55W (With O-Rings)(9 End Plugs)(Sonnax)(Removes Wear Ridges To Provide For Smoother Valve Operation)	1	
S16741ABC-1K	Valve Kit, 5R55N TCC Back Pressure 1999-Up (Contains: Oversized Valve, Spring & End Plug) (Requires: T-F-56947J & T-VB-Fix)	1	
T-F-56947J-TL63	Tool Kit For S16741ABC-1K (Contains: Reamer, Reamer Jig & Guide Pin)	1	

© Whatever It Takes Transmission Parts. Inc.

S16741AC-1K	Valve Kit, 5R55N/5R55S/5R55W TCC Control (Sonnax) (Contains: Valve, 2 Springs, Plug & Dowel Pin) (Must Use Tool # T-F-56947J-TL2 & T-VB-Fix)	1	
T-F-56947J-TL2	Reamer For S16741AC-1K	1	
S16741AC-3	Spring, 5R55N/5R55S/5R55W TCC Control (5 Per Pack) (Sonnax)	1	56947J-S3
S16741ACK	Valve & Sleeve Kit, 5R55N TCC Modulator Plunger Valve (Sonnax)	1	
S16741AG-3	Spring, 5R55N/5R55S/5R55W Forward Engagement Control (5 Per Pack) (Sonnax)	1	56947J-S6
S16741AJ-3	Spring, 5R55N 4-3 Pre-Stroke Valve (Sonnax) 1999-Up	1	56947J-S1
16741AM-1	Manual Valve, 5R55N/5R55S/5R55W (4 7/16") 1999-Up	1	
S16741AP-3	Spring, 5R55N Pressure Regulator (Increased Pressure)(Sonnax)	1	
S16741AP-3K	Spring, 5R55N Pressure Regulator (Increased Pressure)(5 Springs)(Sonnax)	1	
S16741G-6K	End Plug Kit, 5R55S/5R55W (O-Ringed)(Sonnax)(Contains: 5 Single O-Ringed End Plugs, 4 Double O-Ringed Plugs And 15 O-Rings)	1	
S16741GACK	Valve & Sleeve Kit, 5R55S/5R55W TCC Modulator Plunger Valve (Increased Ratio)(Sonnax)	1	
S16741GC-1K	TCC Modulator Valve Assembly, 5R55N/5R55S/5R55W (Sonnax)(Contains: Valve, Sleeve & 2 Springs)(Must Use Tool # T-F-56947J-TL15 & T-VB-Fix)	1	
T-F-56947J-TL15	Reamer, Guide Pin & Jig, For S16741GC-1K (Sonnax)	1	
S16741GCK	TCC Modulator Plunger Valve & Sleeve, 5R55W/5R55W (Sonnax)	1	
S16741GGK	Valve & Sleeve Kit, 5R55S/5R55W Forward Engagement (Contains: Valve, Sleeve & Spring) (Sonnax)(Must Use Tool # T-F-27741-TL13 & T-VB-Fix)	1	
T-F-27741-TL13	Tool Kit, For S16741GGK	1	
S16741GLK	Valve Kit, 5R55S/5R55W Solenoid & Converter Feed Limit (Oversize) (Requires T-F-56947J-TL61)	1	
T-F-6947J-TL61	Tool Kit For S16741GLK (Contains: Reamer, Kig & Guide Pin)(Requires T-VB-Fix)	1	
S16741GP-3K	Spring, 5R55S/5R55W Pressure Regulator (Outer)(Increased Pressure)(5 Springs)	1	
S16741GPK	Sleeve & Clip Kit, 5R55S/5R55W Pressure Regulator Valve (Sonnax) Must Use Tool # T-56947J-TL9	1	
T-56947J-TL9	Reamers & Jig, For S16741GPK (Sonnax)	1	
S16741GRK	Valve & Sleeve Kit, 5R55S/5R55W Reverse Engagement (Contains: Valve, Sleeve & Spring) (Sonnax)(Must Use Tool #T-F-27741-TL13 & T-VB-Fix)	1	
S16741GRAK	Valve & Sleeve Kit, 5R55S/5R55W Boost (Contains: Outer & Inner Boost Valves & Sleeves) (Sonnax)	1	
S16741GUK	Valve & Sleeve Kit, 5R55S/5R55W Reverse Modulator (Contains: Valve, Sleeve & Spring) (Sonnax)(Must Use T-F-27741-TL13 & T-VB-Fix)	1	
S16741GVK	VSF Modulator Control Assembly, 5R55S/5R55W (Fits VFS1 & VSF2 Bore) (Contains: Valve, Sleeve, End Plug, Spring & 2 O-Rings) (Sonnax) (Must Use Tool # T-F-56947J-TL19) & T-VB-Fix)	1	
T-F-56947J-TL19	Reamer, Guide Pin & Jigs, For S16741VGK (Sonnax)	1	
T-VB-FIX	Valve Body Reaming Fixture (Sonnax)	1	
T-56947J-BST2	Bore Sizing Tool, 5R55N TCC Back Pressure Valve (Sonnax) (Removes Wear Ridges To Provide For Smoother Valve Operation)	1	
S16741P-1	Valve, 5R55S/5R55W Pressure Regulator	1	
S16741PBK	Valve Kit, 5R55S/5R55W Line Pressure Booster Kit (Sonnax)(Contains Large Ratio Boost Assembly & Large Diameter Pressure Regulator Spring)	1	

PART #	HARD PARTS (Continued)	QTY.	REFERENCE #
16746A	Plate, 5R55N Solenoid Block To Valve Body (8" Long) 1999-Up	1	
16747A	Plate, 5R55N Valve Body (30 Holes) (8" Long) 1999-Up	1	
16760B	Case, 5R55N (3 1/2" Top Bolts) Round Top (Jaguar 4.0 Liter/Lincoln 3.9L) (Filler Plug In Extension Housing) (Cast # RFXW4P-AE or AD X)	1	YW4Z-7005-CA
16760B-1	Case, 5R55N (3 1/2" Top Bolts) Round Top (Jaguar 4.0L & 3.9L)	1	
16760BA	Case, 5R55N (3 1/4" Top Bolts) Flat Top (3.0 Liter) (Cast # RFXW4P-7006-BD Or BE)	1	
16760BB	Case, 5R55N (3 1/2" Top Bolts) Flat Top (3.0 Liter) (CAst # RF3W4P-7006-BB)	1	
16760GA	Case, 5R55S/5R55W (3 1/2" Top Bolts) Flat Top (4.0 Liter) 2 WD Only (Has 7 Rear Bolt Holes For Extension Housing)(Filler Plug In Case On Passenger Side Rear) 2002-Up	1	1L2Z-7005BD
16760GB	Case, 5R55S/5R55W (3 1/2" Top Bolts) Flat Top (4.0 Liter) 2WD/4x4 (Has 7 Rear Bolt Holes For Extension Housing & 7 Rear Bolt Holes For The Transfer Case) (Filler Plug In Case On Passenger Side Rear) 2002-Up	1	1L2Z-7005DD
16760GC	Case, 5R55S/5R55W (3 1/2" Top Bolts) Flat Top (4.0L) 2WD/4x4 (Has 7 Rear Bolt Holes For Extension Housing & 7 Rear Bolt Holes For the Transfer Case) (Has No Fill Plug In The Case)	1	
16760H	Case, 5R55S/5R55W (5 1/8" Top Bolts) Flat Top (4.6L) 2WD/4x4 (Has 7 Rear Bolt Holes For Extension Housing & 7 Rear Bolt Holes For The Transfer Case) No Fill Plug In Case On Passengers Side	1	
16760HA	Case, 5R55S/5R55W (5 1/8" Top Bolts) Flat Top (4.6L) 2WD/4x4 (Has 7 Rear Bolt Holes For Extension Housing & 7 Rear Bolt Holes For The Transfer Case) (Has A Fill Plug In Case On Passengers Side)	1	
16740HB	Case, 5R55S/5R55W (5 1/8" Top Bolts)(Flat Top)(4.6L 2WD Only)(Has Rear Bolts For Extension Housing Only)(No Fill Plug In Case)	1	

© Whatever It Takes Transmission Parts. Inc.

PART #	HARD PARTS (Continued)	QTY.	REFERENCE #
U56760ME	Case, 5R55E(Uses 1 ISS Sensor In Middle Of Case) 2007-11 (Also Uses 1 Output Speed Sensor On Rear Side Of Case) (Has 8MM Pan Bolt Heads)	1	

PART #	CASE COMPONENTS	QTY.	REFERENCE #
AF235S	A4Ld Crankshft To Flywheel Spacer(6-Bolt) 85-97 2.8, 2.9, 4.0L Only	1	
DF235S	A4Ld Crankshft To Flywheel Spacer(6 Bolt)85-97 **may Use S56000-CS6 As An Alternate. Is Made More Durable*	1	
DF235SA	4R44E/4R55E Crankshaft To Flywheel Spacer(8 Bolt)97-Up	1	
S16761A-2K	Repair Sleeve Kit, 5R55N/5R55S/5R55W Intermediate & Overdrive Servo (Sonnax) (Must Use Tool # T-S-56361J-TL & Fixture # T-SERVO-FIX)	1	
S56000-CS6	Crank Shaft Spacer, For 2.8L/ 2.9L/4.0L (W/A4LD) 6 Bolt (Sonnax)	1	
S56000-CS8	Crankshaft Spacer, A4LD/4R44E/4R55E/5R44E/5R55E 8 Bolt (Sonnax)	1	
T-S-56361J-TL	Reamer Kit, 5R55N/5R55S/5R55W Servo (Contains: 2 Reamers, 1 Jig, 1 Guide Pin, 1 Handle, 1 Pilot & 2 O-Rings) (Sonnax) (For S16761A-2K)(Must Use T-Servo-Fix Also)	1	
T-SERVO-FIX	Servo Pin Bore Reaming Fixture, 5R55N/5R55S/5R55W (Sonnax)	1	
T-0528	Adapter, 5R55N/5R55S/5R55W Fluid Fill	1	
T-5RW-INT.	Repair Bushing, 5R55N/5R55S/5R55W Intermediate Servo (Must Use With Tool # T-SF-99/5RW) (Short Bushing)(Northland)	1	
T-SF-99/5RW	Servo Bore Repair System, 5R55N/5R55S/5R55W Overdrive & Intermediate (Contains: Overdrive Servo Jig, Intermediate Jig, 9/16” Reamer, 5/8” Reamer, 9/16” Guide, 5/8” Guide, 3 Overdrive Bushings, 3 Intermediate Bushings,.473” Guage Pin & Small Driver)	1	
T-5RW-O.DR.	Repair Bushing, 5R55N/5R55S/5R55W Overdrive Servo (Must Use With Tool # T-SF-99/5RW) Long Bushing)(Northland)	1	

PART #	HARD PARTS (Continued)	QTY.	REFERENCE #
16765A	Pan, 5R55N (3 3/8” Deep) (Flat Bottom With Ribs) 1999-Up	1	1W4Z-7A194AA
16765G	Pan, 5R55S/5R55W (4 3/4” Deep At The Deepest Point) 2002-Up	1	4W4Z-7A194-AA
16765A-1	Half Moon Inserts, 5R55N Pan Gasket (.116” Thick) (Prevents Over Tightening Of Pan Gasket) 1999-Up	1	
16765A-6	Plug, 5R55N/5R55S/5R55W Fluid Level Check Plug (Small) 1999-Up	1	W704999-S439
16770A	Extension Housing, 5R55N/5R55S/5R55W 2WD (Uses 2.364”OD Rear Seal) (Cast # XW4P-7A039-AA) 1999-Up	1	XW4Z-7A039AA
16770AA	Extension Housing, 5R55N/5R55S/5R55W 2WD (Uses 2.364”OD Rear Seal) (Cast # 4W4P-7A039-AB) 1999-Up	1	
16770B	Extension Housing, 5R55N/5R55S/5R55W 4x4 (Transfer Case Adapter)	1	
16770G	Extension Housing, 5R55S/5R55W 2WD (Uses 2.484”OD Rear Seal)(6 1/2” Long) (2 Bolt Mount) 2002-Up	1	1L2Z-7A039CA
26775	Converter Nut, 5R55N/5R55S/5R55W Flange Type (Standard Thread)	1	
16776AK	Bolt Set, 5R55N/5R55S/54R55W Pump To Case (1 5/8” Long x 10mm) (8 Pieces) 1999-Up	1	
56778HK	Bolt Set, 5R55N/5R55S/5R55W Stator To Body (1.675” Long Torx Head) (6 Pieces) 1999-Up	1	
16779AK	Bolt Set, 5R55N/5R55S/5R55W Pan To Case (1” Long x 8mm) (16 Pieces) 1999-Up	1	
16781AK	Bolt Set, 5R55N/5R55S/5R55W Extension Housing To Case 2WD Types (2 1/16”Long x 10mm) (7 Pieces) 1999-Up	1	
16781GK	Bolt Set, 5R55S/5R55W Extension Housing To Case 4x4 Type (1 1/2” Long x 10mm) (7 Pieces) 2002-Up	1	
16782AK	Bolt Set, 5R55N Valve Body (21 Pieces) 1999-Up	1	
16782GK	Bolt Set, 5R55S/5R55W Valve Body (21 Pieces) 2002-Up	1	
56783K	Bolt & Nut Set, 5R55N/5R55S/5R55W Center Support (Allen Bolt) 1999-Up	1	
16784AK	Bolt Set, 5R55N/5R55S/5R55W Reverse Servo (3” Long x 8mm) (4 Pieces) 1999-Up	1	
16790AK	Bolt Set, 5R55N Filter (3 1/2” Long x 8mm) (2 Pieces) 1999-Up	1	
16790GK	Bolt Set, 5R55S/5R55W Filter (2 5/8” Long x 8mm) (2 Pieces) 2002-Up	1	
16792AK	Bolt Set, 5R55N/5R55W Solenoid To Case (8 Pieces) 1999-Up	1	
16798A	Nut, 5R55N/5R55S/5R55W Yoke To Output Shaft (.729”ID) 1999-Up	1	W701357-S309
16799A	Nut, 5R55N/5R55S/5R55W Rooster Comb To Manual Shaft (21mm Fine Thread) 1999-Up	1	
16841A	Yoke, 5R55N/5R55S/5R55W Output Shaft 1999-Up	1	XW4Z-7089-AA
16847A	Pick-Up Wheel, 5R55N/5R55S/5R55W Output Speed Reluctor (24 Teeth) .564” Thick 1999-Up	1	
16853AA	Cushion, 5R55N (Some) Forward Clutch (Bonded) (This Fits The Aluminum Piston Only)	1	
56861	Snap Ring, 5R55N/5R55S/5R55W Holds Coast & Direct Clutch In Drum (.054”) 1999-Up	1	E860126-S
56861A	Snap Ring, 5R55N/5R55S/5R55W Holds Coast & Direct Clutch In Drum (.068”) 1999-Up	1	E860127-S
56861B	Snap Ring, 5R55N/5R55S/5R55W Holds Coast & Direct Clutch In Drum (.082”) 1999-Up	1	E860128-S
56861C	Snap Ring, 5R55N/5R55S/5R55W Holds Coast & Direct Clutch In Drum (.096”) 1999-Up	1	E860129-S
56862	Snap Ring, 5R55N/5R55S/5R55W Holds Coast & Direct Clutch Spring Retainer In (.049” Thick) 1999-Up	2	E860125-S
16868A	Use 56890	1	
16868G	Snap Ring, 5R55S/5R55W Holds Overdrive Ring Gear To Overdrive Center Shaft 2001-Up	1	
16872A	Snap Ring, 5R55N Intermediate Clutch (.100” Thick) (6 11/16”OD) 1999-Up	1	XW4Z-7D483-CA

© Whatever It Takes Transmission Parts. Inc.

16876	Snap Ring, 5R55N/5R55S/5R55W Forward Clutch (.068” Thick) (5.558”OD) 1999-Up	1	
16876A	Snap Ring, 5R55N/5R55S/5R55W Forward Clutch (.078” Thick) (5.558”OD) 1999-Up	1	XW4Z-7D483-AC
16876AA	Snap Ring, 5R55N/5R55S/5R55W Forward Clutch (.096” Thick) (5.558”OD) 1999-Up	1	
16877A	Snap Ring, 5R55N/5R55S-5R55W Forward Clutch (.050” Thick) (1.573”OD) 1999-Up	1	E860109-S
16879A	Use 56862	1	
16882A	Snap Ring, 5R55N/5R55S/5R55W Front Hub To Ring Gear (.050” Thick) (4.443”OD) 1999-Up	1	XW4Z-7G375AA
56883	Snap Ring, 5R55N/5R55S/5R55W Holds Center Support To Case (.140” Thick) 1999-Up	1	W702465-S300
16889A	Snap Ring, 5R55N/5R55S/5R55W Rear Hub To Ring Gear (.069” Thick) (4.863”OD) 1999-Up	1	XW4Z-7C122AA
56890	Snap Ring, 5R55N Holds Overdrive Planet Ring Gear to Overdrive Center Shaft 1999-Up (.060” Thick)	1	W702037-S300
16890A	Snap Ring, 5R55N/5R55S/5R55W Rear Planet To Reverse Drum(0.42”Thick) (5.195”OD) 1999-Up	1	W702775-S300
56894A	Snap Ring, 5R55N/5R55S/5R55W Holds Rear Hub To Output Shaft (.077” Thick) 1999-Up	1	E860527-S
16896A	Snap Ring, 5R55N/5R55S/5R55W Overdrive Servo (.097” Thick) (3.250”OD) 1999-Up	1	2L2Z-7H074-AA
16896AC	Snap Ring, 5R55N/5R55S/5R55W Intermediate Servo (.096” Thick) (3.866”OD) 1999-Up	1	W702777-S300
16901A	Spring, 5R55N/5R55S/5R55W Overdrive & Intermediate Servos (Yellow) (1.615” Long) (.730”OD) 1999-Up	2	XW4Z-7D028-DA
16902A	Piston, 5R55N/5R55S/5R55W Overdrive Servo (2.915”OD Large Lip)(Has No Small Lip) (Blue Dot) 1999-Up	1	XW4Z-7D021LA
16902G	Piston, 5R55N/5R55S/5R55W Overdrive Servo (2.915”OD Large Lip)(2.575”OD Small Lip) (Orange Dot) 2002-Up	1	XW4Z-7D021KA
16904A	Cover, 5R55N/5R55S/5R55W Overdrive Servo (Aluminum)(2 O-Ring Type) (2.520”ID)	1	XW4Z-7D027DB
16904AA	Cover, 5R55N/5R55S/5R55W Overdrive Servo (Steel) (2 O-Ring Type) (2.520”OD)	1	
16904G	Cover, 5R55N/5R55S/5R55W Overdrive Servo (Aluminum)(1 O-Ring Type) (2.560”ID)	1	1L2Z-7D027HA
16904GA	Cover, 5R55N/5R55S/5R55W Overdrive Servo (Steel)(1 O-Ring Type) (2.560”ID)	1	
16906A	Use 16901A.	1	
16907AA	Piston, 5R55N Intermediate Servo (Bonded) (2.879”OD Large Lip)(2.757”OD Small Lip) (Green Dot)	1	XW4Z-7D021-HA
16907AB	PIston, 5R55N Intermediate Servo (Bonded) (2.879”OD Large Lip)(2.561”OD Small Lip) (Yellow Dot)	1	XW4Z-7D021-JA
16907AC	Piston, 5R55N/5R55S/5R55W Intermediate Servo (Bonded) (3.505”OD Large Lip) (2.520”OD Small Lip) (White Dot)	1	
16907G	Piston, 5R55S/5R55W Intermediate Servo (Bonded) (3.505”OD) (2.820”OD Small Lip) (Pink Dot)	1	1L2Z-7D021-CA
16909AA	Cover, 5R55N Intermediate Servo (2 O-Rings)(Aluminum)(2.757”ID For Small Lip)(2.879”ID For Large Lip)	1	
16909AB	Cover, 5R55N Intermediate Servo (2 O-Rings)(Aluminum)(2.561”ID For Small Lip)(2.879”ID For Large Lip)	1	
16909G	Cover, 5R55S/5R55W Intermediate Servo (1 O-Ring)(Steel)(2.820”ID)	1	1L2Z-7D027DA
16909GA	Cover, 5R55S/5R55W Intermediate Servo (1 O-Ring)(Aluminum)(2.820”ID)	1	
16910AA	Servo Assembly, 5R55N Reverse Servo (Cast #XW4P-7B193-AC On The Outside Of #914) 1999-Up	1	
16910G	Servo Assembly, 5R55S/5R55W Reverse Servo (Cast # 1L2P-7D036-AB On The Inside Bore Of #914)(ATRA Says Do Not Use This, Use 16910GA)	1	
16910GA	Servo Assembly, 5R55S/5R55W Reverse Servo (D-Ring Type) 2002-Up (Cast # 2L2P-7B193-AA Or 4L2Z-7B193-AA On The Outside Of #914)	1	
16910GB	Servo Assembly, 5R55S/5R55W Reverse Servo (Cast # 2L2P-7D193-AA On The Inside Bore Of The #914)(D-Ring Type)	1	
16911A	Spring, 5R55N Reverse Servo (6 5/8” Long) 1999-Up	1	XW4Z-7D466AA
16911G	Spring, 5R55S/5R55W Reverse Servo (7 1/2” Long) 2002-Up	1	1L2Z-7D446-AA
16912A	Piston, 5R55N Reverse Servo (Bonded) (1.175”ID Cover) 1999-Up	1	XW4Z-7D189AA
16912G	Piston, 5R55S/5R55W Reverse Servo (Bonded) (1.655”ID Cover) 2002-03 (Can Use 16912GA)	1	1L2Z-7D189AA
16912GA	Piston, 5R55S/5R55W Reverse Servo (Bonded) (1.655”ID) 2004-Up (Retro Fits 2002-Up)	1	
16913A	Cover, 5R55N/5R55S/5R55W Reverse Servo (Aluminum) (7.820”OD) (Cast #XW4P-7D372AA) 1999-Up	1	XW4Z-7D372-AA
16914A	Housing, 5R55N Reverse Servo (Cast #XW4P-7D036-AB) 1999-Up	1	XW4Z-7D036AC
16914G	Housing, 5R55S/5R55W Reverse Servo (D-Ring Type) 2002-Up (Cast #2L2P-7B193-AA Or 4L2Z-7B193-AA On The Outside)	1	1L2Z-7D036AB
16916A-2	Strut, 5R55N/5R55S/5R55W Intermediate/Overdrive Servos (1.600” Long Piston Side) 1999-Up	2	XW4Z-7D029AB
16916A-3	Strut, 5R55N/5R55S/5R55W Intermediate/Overdrive Servos (1.570” Long Adjustment Side) 1999-Up	2	XW4Z-7D029BB
16917-2	Strut, 5R55N/5R55S/5R55W Reverse Lever Assembly (1.735” Long) (.335”ID Hole) 1999-Up	1	
16917-4	Pin, 5R55N/5R55S/5R55W Reverse Lever (5.395” Long) (.334”OD) 1999-Up	1	
16919A	Bolt, 5R55N/5R55S/5R55W Adjustment (Both Bands) (2.945” Long) 1999-Up	2	XW4Z-7C492AA
16961A	Use 56961C	2	FOTZ-7A262B
56961C	Piston, 5R55N/5R55S/5R55W Coast Clutch #961 & Direct Clutch #961 1999-Up	1-2	
16962A	Retainer, 5R55N Intermediate Piston (Aluminum) (6 1/4”OD) (XW4P-7N061-DA) 1999-Up	1	
16963A	Piston, 5R55N Intermediate Clutch (Bonded) (5 15/16”OD) 1999-Up	1	

© Whatever It Takes Transmission Parts. Inc.

PART #	HARD PARTS (Continued)	QTY.	REFERENCE #
16964A	Piston, 5R55N/5R55S/5R55W Forward Clutch (Bonded) (5.090”OD) With Check Ball 1999-7/05 (This Has The Cushion # 853 Made Onto The Piston)	1	1L2Z-7A262-AA
16964AHP	Piston, 5R55N/5R55S/5R55W Forward Clutch (Bonded)(5.090”OD)(With Check Ball) (Hi-Per Blue)	1	
16964AA	Piston, 5R55N (Some) Forward Clutch (Aluminum) 1999-02	1	
56971K	Return Spring Set, 5R55N/5R55S/5R55W Coast & Direct Clutch (20 Pieces) 1999-Up	1	XW4Z-7A480BA
16972A	Return Spring, 5R55N Intermediate (19 Fingers, Split Type) (.053” Thick) 1999-Up	1	XW4Z-7B070-CA
16974A	Retainer W/Springs, 5R55N/5R55S/5R55W Forward Clutch (3.050”OD) (10 Springs) 1999-Up	1	1L2Z-7G299-AA
16974AA	Retainer, 5R55N Forward Clutch (3.235”OD)(Fits Aluminum Piston) 199-Up	1	
56981	Retainer, 5R55N/5R55S/5R55W Coast & Direct Piston Spring (3.540”OD) 1999-Up	2	E5TZ-7A527A
16984AA	Springs, 5R55N Forward Clutch Return (15 Springs)(Fits Aluminum Piston) 1999-Up	1	
16985A	Use 56981	1	
16991A	Linkage Assembly, 5R55N/5R55S/5R55W Internal (Cast # On Rooster Comb Is 1L2P-7C494-BA or XW4P-7C494-AC) 1999-Up (Contains # 799, 994, 991-3 & 991-2)(Without Manual Shaft)	1	
16991A-2	Detent Spring, 5R55N/5R55S/5R55W (4” Long) 1999-Up	1	
16991A-3	Rooster Comb, 5R55N/5R55S/5R55W (1L2P-7C494-BA or XW4P-7C494-AC) 1999-Up	1	
16991A-4	Shaft, 5R55S/5R55W Manual (Both Ends Threaded) (3.880” Long) (Manual Lever Is Seperate From Shaft)	1	4W4Z-7A256-AA
16991AA-4	Shaft, 5R55S/5R55W Manual (Only One End Threaded)(3.150” Long)(Mustang 4.6L 2006) (With Manual Lever Made Onto Shaft)	1	
16992G	Lever, 5R55S/5R55W External Shift (Cast #L2P-7A257-AB) 2002-Up	1	XW4Z-7A256-AA
16994A	Park Rod, 5R55N/5R55S/5R55W (9 3/4” Long) 1999-Up	1	
16995A	Park Pawl Assembly, 5R55N/5R55S/5R55W (Pin Is 1.326” Long)(3 Pieces) 1999-Up	1	
16995AA	Park Pawl Assembly, 5R55N/5R55S/5R55W (Pin Is 2.325” Long)(3 Pieces) 1999-Up	1	
16996A	Fitting, 5R55N/5R55S/5R55W Cooler Line (26mm) (Screw-In) 1999-Up	2	
16996AA	Fitting, 5R55N/S/W Cooler Line 22mm (Screw-In)	2	
T16996XR	Fitting Replacement, 5R55N/5R55S/5R55W Radiator Line (Screw In)(With 3/8” Line Compression) (Teckpak)	1	
T16996ZR	Fitting Replacement, 5R55N/5R55S/5R55W Radiator Line (Screw In)(With 1/2” Line Compression) (Teckpak)	1	

© Whatever It Takes Transmission Parts. Inc.

QUALITY. PERFORMANCE. RELIABILITY.

Every part. Every time.



When it comes to quality automated transmission components, BorgWarner Transmission Systems has it all. Every friction plate and module. Every one-way clutch. Every solenoid. Every brake band. And because BorgWarner is the supplier to nearly every automated transmission manufacturer around the world, you can trust the technology we provide will meet or exceed your customer's requirements. The world's leading automakers all count on the proven performance and reliability of BorgWarner Transmission Systems. Why wouldn't you?

To find a distributor or keep up on our latest news, visit our website.

ts.aftermarket.borgwarner.com

BorgWarner

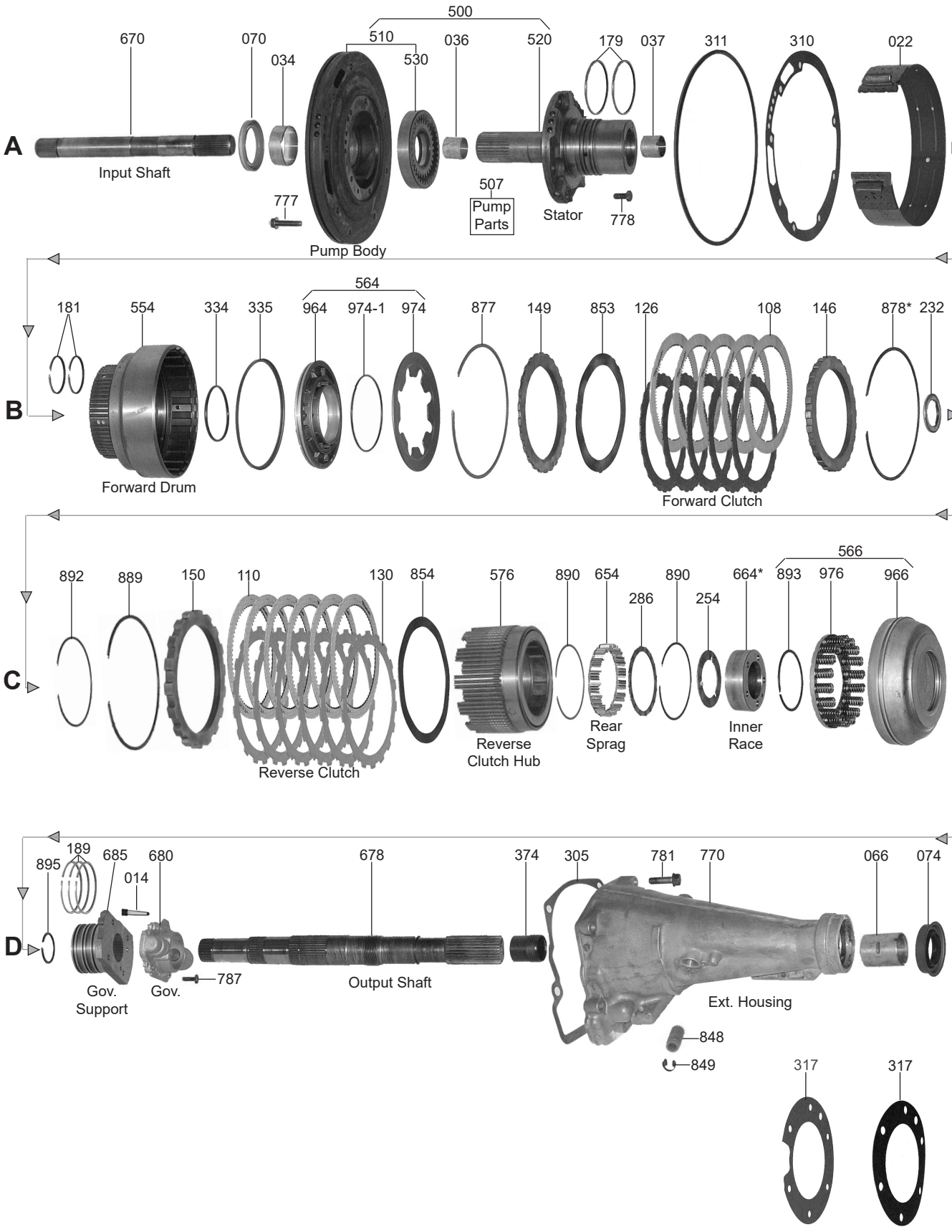

000 P&R Kit
002 OHK Kit
004 Master L/Steels Kit
006 Master W/Steels Kit
011 Filter Kit
030 Bushing Kit
119 Friction Module
139 Steel Module
165 V.B. Kit
175 Ring Kit
200 Washer Kit
201 Bearing Kit
390 External Seal Kit
400 Tech Manual

FORD

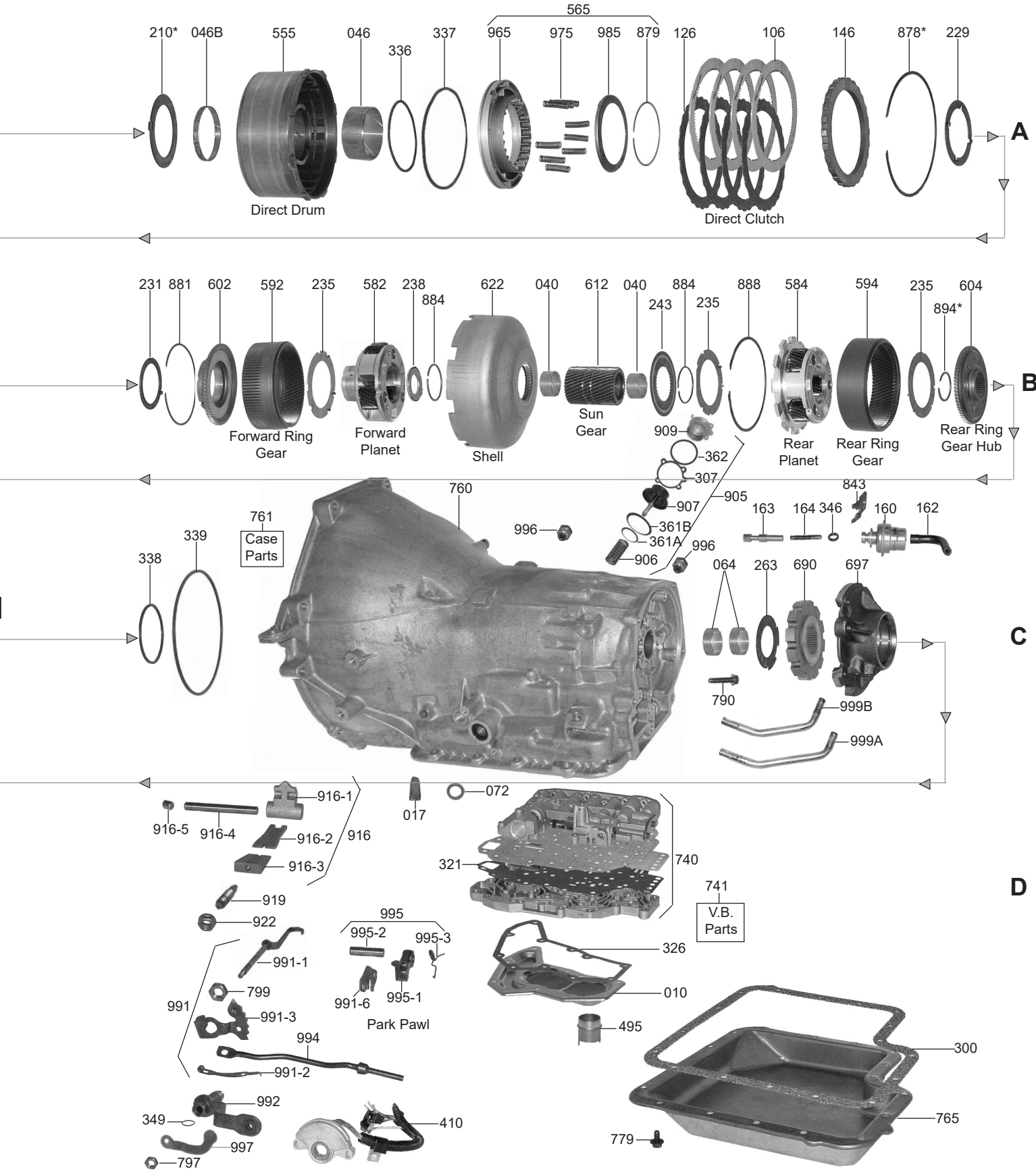

FORD

© Whatever It Takes Transmission Parts. Inc.

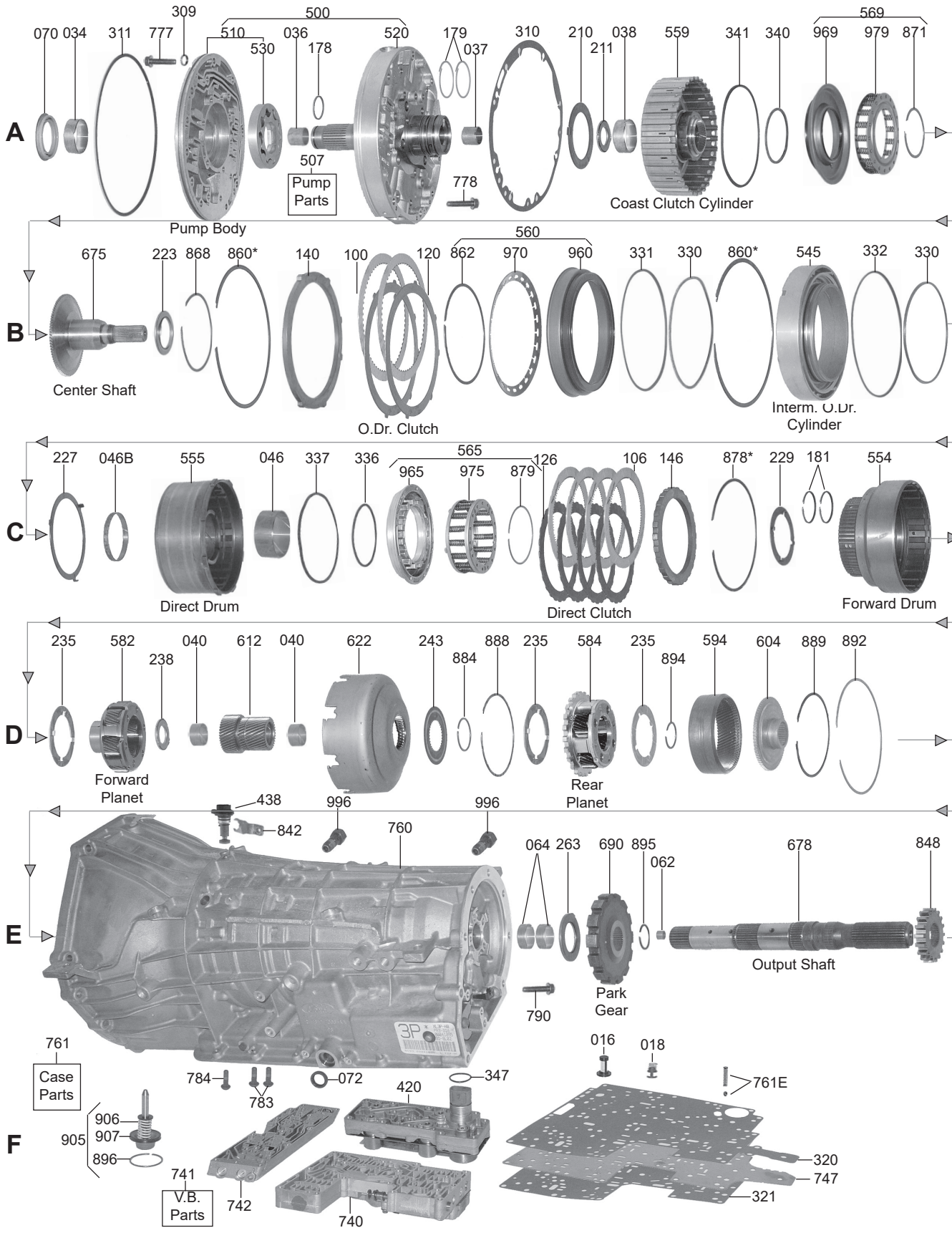

FORD

© Whatever It Takes Transmission Parts. Inc.

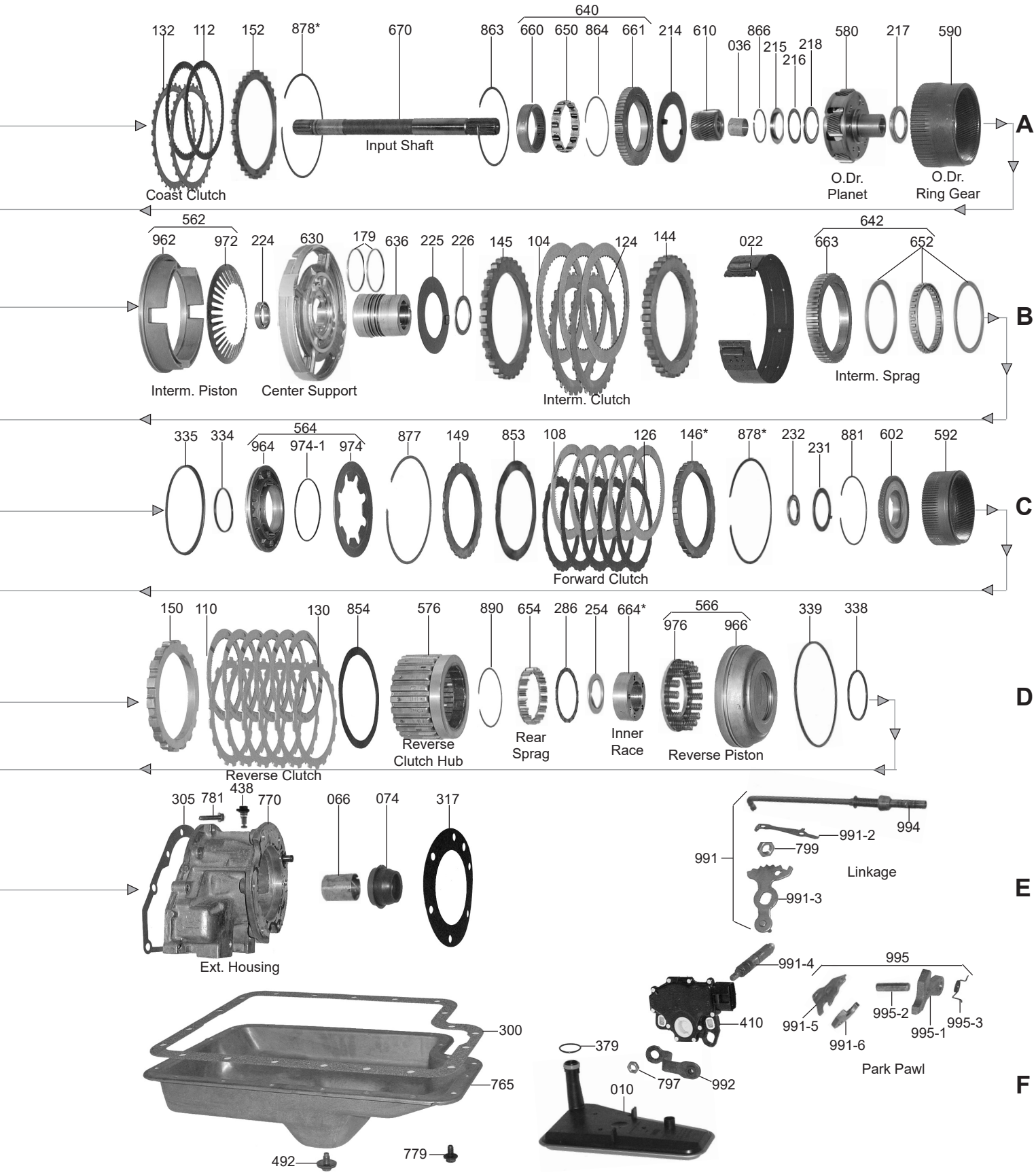

FORD

© Whatever It Takes Transmission Parts. Inc.

PART #	PAPER & RUBBER KIT	QTY	REFERENCE #
36000	Paper & Rubber Kit, C-6 1966-E76	1	
36000C	Paper & Rubber Kit, Combo 1968-Up	1	
36000E	Paper & Rubber Kit, E4OD 1989-95	1	

PART #	OVERHAUL KITS	QTY	REFERENCE #
36002	Overhaul Kit, C-6 1966-E76	1	
36002C	Overhaul Kit, C-6 Combo 1968-96	1	
36002CFHP	Overhaul Kit, C-6 Combo 1968-96 (TTK MAXX)	1	
36002E	Overhaul Kit, E4OD 1990-95 (TTK) (For 1989 Only Sell 32320E & 32321E Also or Sell T36002E or T36002EF)	1	
36002EB	Overhaul Kit, E4OD/4R100 (Cork) 1996-Up (W/2.506”OD Rear Seal) For 4R100 W/PTO You Must Sell 36301 Also (For Super Duty You Must Sell The 36074E 3.180”OD Rear Seal)	1	
36002EBW	Overhaul Kit, E4OD/4R100 (Bonded Pan Gasket) 1996-Up (W/2.506”OD Rear Seal) (.015” Valve Body Gasket) 4R100 W/PTO You Must Sell 36301 Also (For 2WD Super Duty You Must Sell The 36074E, 3.180”OD Rear Seal)	1	
36002EF	Overhaul Kit, E40D 1989-95 (Transtec)(w/Duraprene Pan Gasket)	1	

PART #	MASTER L/STEEL KIT	QTY	REFERENCE #
36004	Master L/Steels Kit, C-6 1966-E67	1	
36004A	Master L/Steels Kit, C-6 L1967-E76	1	
36004B	Master L/Steels Kit, C-6 L1976-Up	1	
36004BS1	Master L/Steels Kit, C-6 (Stage 1) L1976-Up	1	
36004E	Master L/Steels Kit, E4OD 1989-95	1	
36004EB	Master L/Steels Kit, E4OD (W/72 Teeth Reverse Frictions) 1996-3/97	1	
36004EBW	Master L/Steels Kit, E4OD (With 72 Teeth Reverse Frictions)(With Bonded Pan Gasket) 1996-E97	1	
36004ED	Master L/Steels Kit, E4OD/4R100 (W/24 Teeth Reverse & 64 Teeth Overdrive Frictions) L97-L98 (W/2.506”OD Rear Seal) (For 4R100 W/PTO You Must Sell 36301 Also) (This Kit Has The 50 Teeth Intermediate Friction. If Customer Has 60 Teeth Friction He Must Use 36555CK)	1	
36004EG	Master L/Steels Kit, 4R100 (24 Teeth Reverse & 32 Teeth Overdrive Frictions) 1998-Up (2.506”OD Rear Seal) (With PTO You Must Sell 36301 Also)(For 2WD Super Duty You Must Sell The 36074E, 3.180”OD Rear Seal)	1	
36004EGH	Master L/Steels Kit, 4R100 (24 Teeth Reverse & 32 Teeth Overdrive Frictions) 1998-Up (With Overdrive, Intermediate, Direct & Forward GPZ Frictions)(For Bonded Pistons Order A36960AK)	1	
36004EGW	Master L/Steels Kit, 4R100 (24 Teeth Reverse & 32 Teeth Overdrive Frictions) 1998-Up (Transtec) (2.506”OD Rear Seal)(With PTO You Must Sell 36301 Also)(0.015” Valve Body Gasket)(For 2WD Super Duty You Must Sell The 36074E, 3.180”OD Rear Seal)	1	

PART #	MASTER W/STEEL KIT	QTY	REFERENCE #
36006	Master W/Steels Kit, C-6 1966-E67	1	
36006A	Master W/Steels Kit, C-6 L1967-E76	1	
36006B	Master W/Steels Kit, C-6 L1976-Up	1	
36006E	Master W/Steels Kit, E4OD 1989-95	1	
36006EB	Master W/Steels Kit, E4OD (W/72 Teeth Reverse Frictions) 1996-3/97	1	
36006ED	Master W/Steels Kit, E4OD/4R100 (W/24 Teeth Reverse Frictions) 4/97-UP (W/2.506”OD Rear Seal) (For 4R100 W/PTO You Must Sell 36301 Also)(This Kit Has The 50 Teeth Intermediate Friction. If Customer Has 60 Teeth Friction He Must Use 36555CK)	1	
36006EG	Master W/Steels Kit, 4R100 (24 Teeth Reverse & 32 Teeth Overdrive Frictions) .125” Intermediate Steels 1998-Up (2.506”OD Rear Seal) With PTO You Must Sell 36301 Also (For 2WD Super Duty You Must Use The 36074E, 3.180”OD Rear Seal)	1	
36006EGH	Master W/Steels Kit, 4R100 (24 Teeth Reverse & 32 Teeth Overdrive Frictions) 1998-Up (With Overdrive, Intermediate, Direct & orward GPZ Frictions)(For Bonded Pistons Order A36960AK)	1	

PART #	FILTER	QTY	REFERENCE #
36010A	Filter, C-6 2WD 1966-74	1	C6AZ-7A098-B
36010B	Filter, C-6 2WD 1975-Up	1	D5AZ-7A098-A
36010C	Filter, C-6 4x4 1973-Up	1	D3TZ-7A098-A
36010E	Filter, E4OD/4R100 2WD 1989-Up	1	E9TZ-7G186-BA
36010EA	Filter, E4OD/4R100 4X4 1989-Up	1	E9TZ-7A098-B

FORD

© Whatever It Takes Transmission Parts. Inc.

PART #	FILTER KIT	QTY	REFERENCE #
36011A	Filter Kit, C-6 2WD 1966-74	1	
36011B	Filter Kit, C-6 2WD 1975-Up	1	
36011C	Filter Kit, C-6 4x4 1973-Up	1	
36011E	Filter Kit, E4OD/4R100 2WD 1989-Up	1	
36011EA	Filter Kit, E4OD/4R100 4x4 1989-Up	1	

PART #	MISC. FILTERS	QTY	REFERENCE #
36014	Screen, C-6 Governor	1	D0AZ-7E387-A
36016	Screen, E4OD/4R100 Solenoids (Fits On Seperator Plate)	1	E9TZ-7G308-B
36017	Screen, C-6 Pump Inlet	1	
36018	Screen W/Spring, E4OD Intermediate Accumulator 1991-96 (Sets in Case Under Spacer Plate)	1	F1TZ-7H194-A

PART #	BANDS	QTY	REFERENCE #
36022	Band, C-6 Intermediate (Flex)	1	D9AZ-7D034-B
36022A	Band, C-6 Intermediate (Rigid) (1 3/4" Wide)	1	
36022B	Band, C-6 Intermediate (Rigid) (2 1/4" Wide) 1967-69	1	
S36022C	Band, C-6 Intermediate (Flex)(2 1/4" Wide)(Heavy Duty Red Friction Material) 1966-Up	1	
36022E	Band, E4OD/4R100 Intermediate (Flex) 1989-Up	1	E9TZ-7D034-A
36022K	Band, C-6 Intermediate (Flex)(Raybestos Pro Series)	1	
36022S	Band, C-6 Intermediate (Slip On or Snap Band)	1	

PART #	BUSHINGS	QTY	REFERENCE #
36030	Bushing Kit, C-6 1966-Up	1	
36030E	Bushing Kit, E4OD/4R100 1989-97 (Contains 14 Bushings)	1	
36034	Bushing, C-6/E4OD Pump Body (Babbit)(.760" Tall)	1	C6AZ-7B258-A
36034B	Bushing, C-6 Pump Body (Bronze) (.755" Tall)	1	E0AZ-7B258-A
36034D	Bushing, C-6/E4OD Pump Body (Enhanced W/CT-101 Dry Film Lubricant)(W/Indents For Oil Retention)	1	
36034E	Bushing, E4OD Pump Body (Bronze)(Aftermarket)(.760" Tall) 1989-95	1	
36030EA	Bushing Kit, E4OD/4R100 (9 Bushings) 1998-Up (With A 1.690"ID Extension Housing Bushing) (For Super Duty W/1.890"ID Bushing Sell The 36066D Also)	1	
36034EB	Bushing, E4OD/4R100 Pump Body (.702" Tall) 1996-Up (Can Use 76034)	1	
76034	Bushing, E4OD/4R100 Pump (Bronze) (.702" Tall) 1996-Up	1	
36036	Bushing, C-6/E4OD/4R100 Stator (Front) & Overdrive Sun Gear	1-2	C6AZ-7B261-C
36037	Bushing, C-6/E4OD/4R100 Stator (Rear)	1	C6AZ-7D018-A
36038	Bushing, 4R100 Coast Clutch Drum 1998-Up (2.492"OD)	1	
36038A	Bushing, E4OD/4R100 Coast Clutch Drum (Bronze) 1998-Up (Stamped Steel Drums)	1	
36040	Bushing, C-6/E4OD/4R100 Sun Gear (Primary)	2	C6AZ-7D065-A
36046	Bushing, C-6 Direct Drum (Rear)(1.241" Wide)	1	C6AZ-7D046-A
36046A	Bushing, E4OD/4R100 Direct Drum (Rear) (1.111" Wide)	1	
36046B	Bushing, C-6/E4OD/4R100 Direct Drum (Front)(.359" Wide)	1	C6AZ-7D046-B
36046BB	Bushing, E40D/4R100 Direct Drum (Front)(Bronze)	1	
56046B	Bushing, E4OD Coast Clutch Drum (Bronze) 1989-97 (Cast Iron Drums)	1	
56062	Bushing, E4OD Output Shaft Pilot	1	
56062A	Bearing, E4OD Output Shaft Pilot (Use 56268)	1	
56268	Bearing, E4OD Output Shaft Pilot	1	
36064	Bushing, C-6/E4OD/4R100 Case (W/3 Oil Grooves) Fits C-6 Front & E4OD/4R100 Front & Rear (2 Piece Type)	1-2	C6AZ-7025-D
36064B	Bushing, C-6 Case (Rear) W/Out Oil Groove (2 Piece Type)	1	C6AZ-7025-B
36064BA	Bushing, C-6/E4OD/4R100 Case (W/1 Oil Groove) (Rear) (2 Piece Type)	1	
S36064H	Bushing, C-6/E4OD Case (Early 1 Piece Type)Sonnax 1989-94 (With 3 Grooves To The Front)	1	
S36064HA	Bushing, E4OD/4R100 Case (Sold Seperately) 1995-Up (Sonnax)(Late 1 Piece Type)(With 3 Grooves To The Front & 1 To The Back)	1	
S36064HAX	Bushing, E4OD/4R100 Case (Late 1 Piece Type) 1995-Up (Sonnax) (Oversized) (Use With T-36008A, T-36605-03, T-36605-04)	1	
36064HB	Bushing, C-6/E4OD Case (1 Piece Type)(Bronze) 1966-Up	1	
S36064HX	Bushing, C-6/E4OD Case (Early 1 Piece Type) 1989-97 (Sonnax) (Oversized) (Use With T-36008A, T-36605-03, T-36605-04)	1	36008A
36066	Bushing, C-6/E4OD/4R100 Extension Housing (1.690"ID)(Bronze)	1	B5AZ-7A034-A
36066D	Bushing, 4R100 Extension Housing (Super Duty)(1.890"ID) 1998-Up (Teflon Coated)	1	
36066T	Bushing, C-6/E4OD/4R100 Extension Housing (1.690"ID)(Teflon Coated)	1	
T-36008A	Installation Tool, Rear Case Bushing (Sonnax)	1	
T-36605-03	Reamer, Case Bushing (S36064HX & S36064HAX) (Sonnax)	1	
T-36605-04	Fixture, Case Bushing Reamer (T-36605-03) (Sonnax)	1	

© Whatever It Takes Transmission Parts. Inc.

PART #	METAL CLAD SEALS	QTY	REFERENCE #
36070	Seal, C-6 Front Pump W/Out Flange	1	C2AZ-7A248-A
36070A	Seal, C-6 Front Pump W/Flange (.320" Thick)	1	C3OP-7A248-A
76070A	Seal, C-6 Front Pump W/Flange (.360" Thick)	1	
36070C	Seal, E4OD/4R100 Front Pump W/Flange (Black Viton) 1992-Up	1	

PART #	METAL CLAD SEALS (Continued)	QTY	REFERENCE #
36070E	Seal, E4OD/4R100 Front Pump W/Flange (National) 1992-Up	1	
36072	Seal, C-6/E4OD/4R100 Linkage Shaft	1	D5AZ-7B498-A
36074	Seal, C-6/E4OD/4R100 Rear (2.506"OD) W/Out Boot	1	D5AZ-7052-A
36074B	Seal, C-6/E4OD/4R100 Rear (2.506"OD) W/Boot	1	D5AZ-7052-A
36074C	Seal, C-6 Rear (3.066"OD)(Truck W/Bolt On Yoke) 1968-Up	1	B3TZ-7A011-A
36074E	Seal, 4R100 Rear (3.180"OD)(Super Duty) 1998-Up	1	F81Z-7052-AA

PART #	FRICTION CLUTCH	QTY	REFERENCE #
36100	Friction, E4OD/4R100 Overdrive Clutch (.078") (64 Teeth) 1989-Up	2-3	E9TZ-7B164-A
36100PPK	Friction/Steel Kit, E4OD Overdrive Clutch 1989-98 (Hi Performance)(Powerpack)(Includes: Four - 36100 (.070"), Four - 36120HP (.080") & One - 36140 (.188"))(Alto)		
136100A	Friction, 4R100 Overdrive Clutch (.078")(32 Teeth)(High Energy) 1998-Up	2	
36100EA	Friction, 4R100 Overdrive Clutch (.078")(32 Teeth) 1998-Up	2-3	F81P-7B164-AA
36100EAHP	Friction, 4R100 Overdrive Clutch (.078") 32 Teeth (Hi-Performance) 1998-Up	2-3	
36100EB	Friction, 4R100 Overdrive Clutch (.078") 32 Teeth 1998-Up	2-3	
36100EBPPK	Friction/Steel KIt, 4R100 Overdrive Clutch 1999-Up (Hi Performance)(Powerpack)(Includes: Four - 36100 (.070"), Four - 36120HP (.080") & One - 36140 (.192")(Alto)	1	
36104E	Friction, E4OD Intermediate Clutch (.078")(50 Teeth)(Waffle) 1989-Up	3	E9TZ-7B164-B
36104EA	Friction, E4OD/4R100 Intermediate Clutch (.078")(50 Teeth)(Starburst) 1998-Up	3	F75P-7F219-BA
36104EAH	Friction, E4OD/4R100 Intermediate Clutch (.078")(50 Teeth)(Starburst)(GPZ) 1998-Up	1	
36104EAS1	Friction, E4OD/4R100 Intermediate Clutch (.078")(50 Teeth)(Starburst)(Stage 1) 1998-Up Retro Fits To 1989	3	
36104EB	Friction, E4OD/4R100 Intermediate Clutch (.078") (50 Teeth) (Hi-Energy) 2001-Up	3	
36104EHP	Friction, E4OD/4R100 Intermediate Clutch (.078") (50 Teeth) (Hi-Performance) 1989-Up	3	
36104EPPK	Friction/Steel Kit, E4OD/4R100 Intermediate Clutch (Hi-Performance) Power Pack (Includes: Pressure Plates, 1 Sided Friction, 1 Sided Steels) (Alto)	1	
36104EZPK	Friction/Steel Kit, E4OD/4R100 Intermediate Clutch "Z Pak" 1989-Up	1	
36106	Friction, C-6/E4OD/4R100 Direct Clutch (.077") (Waffle)(Grey) 1966-Up	3-4	C8AZ-7B164-H
36106B	Friction, E4OD/4R100 Direct Clutch (.077) (Grooved)(Tan) 1996-Up	3-5	
36106CPK	Friction & Steel Kit, C-6/E4OD Direct (.063") (Smooth)(Tan)(Power Pack) Includes; 8-36106(.063"); 9-36126(.059"): 1-36146(.120"); & 1-36878D	1	
36106CPPK	Friction & Steel Kit, C-6/E4OD Direct (.063") (Red Hi-Performance)(Power Pack) Includes: 8-36106(.063"), 8-36126(.059" Kolene), 1-36126(.090" Kolene), 1-36126(.120") & 1-36878D	1	
36106CS1	Friction, C-6/E4OD/4R100 Direct Clutch (.062")(Stage 1) 1966-Up	AR	
36106E	Friction, E4OD/4R100 Direct Clutch (.077") (Smooth) 1989-Up	4	E9TZ-7B164-D
36106HP	Friction, C-6/E4OD Direct Clutch (.077") (Hi-Performance) 1966-Up	3-4	
36106HPK	Friction Kit, C-6/E4OD Direct Clutch (.077") (Hi-Performance) 5 Per Kit	1	
36108	Friction, C-6 Forward Clutch (.060")(Square Teeth)(Waffle) 1966-E67	4-5	
36108A	Friction, C-6 Forward Clutch (.061") (Smooth) 1967-E76	3-5	D2AZ-7B164-A
36108AHP	Friction, C6 Forward Clutch (.061") (Red Eagle High Performance) 1967-E76 (Alto)	3-5	
36108AS1	Friction, C-6 Forward Clutch (.061")(Smooth)(Stage 1) 1967-Up	3-5	
36108B	Friction, C-6/E4OD Forward Clutch (.075") (Smooth) L1976-Up	4	D6AZ-7B164-B
36108BHP	Friction, C-6/E4OD Forward Clutch (.075") (Hi-Performance) L1976-Up	4	
36108BHPK	Friction Kit, C-6/E4OD Forward Clutch (.075") (Hi-Performance) L1976-Up (4 Per Kit)	1	
36108C	Friction, C-6/E4OD/4R100 Forward Clutch (.075") (Hardcore)(Smooth)	4-5	F2TP-7E311-AA
36108CH	Friction, C-6/E4OD/4R100 Forward Clutch (.077")(Hardcore)(GPZ)	4-5	
36108DPPK	Friction & Steel Kit, C-6/E4OD Forward Clutch (.063") (Red Hi-Performance)(Power Pack) Includes; 6-36108(.063), 6-36126(.059" Kolene), 1-36149, 1-36146(1.22")	1	
36110	Friction, C6-/E4OD Reverse Clutch (.078") (72 Teeth) 1966-E97	4-6	D6AZ-7B164-A
36110EA	Friction, E4OD/4R100 Reverse Clutch (.078") 24 Teeth 1998-Up	4-6	F7TZ-7B164-AA
36110EAHP	Friction, E4OD/4R100 Reverse Clutch (.078") 24 Teeth (Hi Performance)(Brown) 1998-Up	1	
36110HP	Friction, C-6/E4OD Reverse Clutch (.075") (72 Teeth) (Hi-Performance) 1966-E97	4-6	
36110HPK	Friction Kit, C-6/E4OD Reverse Clutch (.075") (72 Teeth) (Hi-Performance) 66-E97(5 Per Kit)	1	
36112	Friction, E4OD/4R100 Coast Clutch (.078") 1989-Up	2-3	E9TZ-7B164-C
36112HP	Friction, E4OD/4R100 Coast Clutch (.078") Hi-Performance 1989-Up	2-3	
36119A	Friction Module, C-6 L1967-E76	1	
36119B	Friction Module, C6 L1976-Up	1	
36119BHP	Friction Module, C-6 (Hi-Performance) Indy Reds 1967-Up	1	
36119BS1	Friction Module, C-6 (Stage 1) L1976-Up	1	
36119CHP	Friction Module, C-6 (High Performance)(Red Eagle) L1976-Up	1	

© Whatever It Takes Transmission Parts. Inc.

36119E	Friction Module, E4OD 1989-95	1	
36119EAHP	Friction Module, E4OD (Hi-Performance) Red Eagle (Alto) 1989-96	1	
36119EAS1	Friction Module, E4OD (Stage 1) 1997	1	
36119EB	Friction Module, E4OD (With 72 Teeth Reverse Frictions) 1996-E97 (Retro Fits 1989-E97)	1	
36119ED	Friction Module, E4OD/4R100 (With 24 Teeth Reverse & 64 Teeth Overdrive Frictions) L1997-L98	1	
36119EG	Friction Module, 4R100 (With 24 Teeth Reverse & 32 Teeth Overdrive Frictions) 1998-Up	1	
36119EGH	Friction Module, 4R100 (With 24 Teeth Reverse & 32 Teeth Overdrive Frictions) 1998-Up (With Overdrive, Intermediate, Direct & Forward GPZ Frictions)	1	
36119EGHP	Friction Module, 4R100 (With 24 Teeth Reverse & 32 Teeth Overdrive Frictions)(Generation 2) 1998-Up	1	
36119EGS1	Friction Module, 4R100 (With 24 Teeth Reverse & 32 Teeth Overdrive Frictions) (Stage 1) 1998-Up	1	
36119EHP	Friction Module, E4OD (Generation 2) 1989-95	1	
36119ES1	Friction Module, E4OD (Stage 1) 1989-95	1	

PART #	STEEL CLUTCH	QTY	REFERENCE #
36120	Steel, E4OD/4R100 Overdrive Clutch (.080")(6 Teeth) 1989-Up	2-3	EPTZ-7B442-A
36120HP	Steel, E4OD/4R100 Overdrive Clutch (.080")(6 Teeth)(Kolene) 1989-Up	2-3	1
36124	Steel, E4OD/4R100 Intermediate Clutch (.080") 1989-Up	2-3	E9TZ-7B442-B
36124A	Steel, 4R100 Intermediate Clutch (.125") 1998-Up (Use 36145)	3	
36124HP	Steel, E4OD/4R100 Intermediate Clutch (.080")(Koleen) 1989-Up	3	
36126	Steel, C-6/E4OD/4R100 Forward & Direct Clutch (.078") 1966-Up	8-9	E9TZ-7B442-D
36126A	Steel, C-6/E4OD/4R100 Forward & Direct Clutch (.078") Kolene	8-9	
36126B	Steel, C-6 Forward Clutch .081" (Waved) (26 Teeth) 1967-76	1	
36126C	Steel, C-6/E4OD/4R100 Forward & Direct Clutch (.059") 1966-Up (For Clutch Packs That Are Too Tight)	1	
36126X	Steel, C-6/E4OD/4R100 Forward & Direct (.095") (Oversized)	AR	
36128HP	Steel/Spacer, C-6/E4OD/4R100 Forward Clutch (Hi-Performance)(Use This With The 36149 On Top To Gain An Extra Friction With Proper Clearance)	1	
36130	Steel, C-6/E4OD/4R100 Reverse Clutch (.068") 1966-Up	4-6	E9TZ-7B442-E
36130A	Steel, C-6/E4OD/4R100 Reverse Clutch (.068") (Kolene) 1966-Up	4-6	
36130X	Steel, C-6/E4OD/4R100 Reverse Clutch (.081") (Oversized)	AR	
36130XK	Steel Kit, E4OD Reverse & Forward/Direct (Oversize) 1989-Up Contains; 4-36130X, 3-36126X, & 1-36870	1	
36132	Steel, E4OD/4R100 Coast Clutch (.080")(60 Teeth) 1989-Up (For Cast Iron Drum)	2	E9TZ-7B442-C
36132HP	Steel, E4OD/4R100 Coast Clutch (.080")(60 Teeth) 1989-Up (Kolene)(For Cast Iron Drum)	2	
36132E	Steel, 4R100 Coast Clutch (.079")(32 Teeth) 1998-Up (For Stamped Steel Drum)	2-3	F81Z-7B442-AA
36132EHP	Steel, 4R100 Coast Clutch (.079")(32 Teeth)(Kolene) 1998-Up (For Stamped Steel Drum)	2-3	
36139	Steel Module, C-6 1966-Up	1	
36139HP	Steel Module, C6 1996-Up (High Performance)	1	
36139E	Steel Module, E4OD/4R100 (W/Cast Iron Coast Clutch Drum) 1989-98	1	
36139ED	Steel Module, E4OD/4R100 L1997-L98	1	
36139EG	Steel Module, 4R100 (With .125" Thick Intermediate Steels) 1998-Up	1	
36139EGHP	Friction/Steel Module, 4R100 1999-04 (Contains Forward, Direct, Intemediate, & Overdrive Powerpack)	1	
36139EHP	Steel Module, E4OD/4R100 (High Performance)(Kolene)1989-98 (With Cast Iron Coast Clutch Drum)	1	

PART #	CLUTCH PRESSURE PLATES	QTY	REFERENCE #
36140	Pressure Plate, E4OD Overdrive Clutch (.490")	1	E9TZ-7B066-B
36140A	Pressure Plate, E4OD/4R100 Overdrive Clutch (.320")	1	F3TZ-7B066-A
36140B	Pressure Plate, E4OD/4R100 Overdrive Clutch (.203")(6 Teeth)	1	
36140BHP	Pressure Plate, E4OD/4R100 Overdrive Clutch (.192") 1997-04	1	
36144	Pressure Plate, E4OD Intermediate Clutch (Rear) (.580")	1	F1TZ-7B066-A
36144A	Pressure Plate, E4OD Intermediate Clutch (Rear) (.415")	1	E9TZ-7B066-D
36144B	Pressure Plate, 4R100 Intermediate Clutch (Rear) (.325")	1	
36145	Pressure Plate, E4OD/4R100 Intermediate Clutch (.125")(6 1/8"ID)(Front)(Also Fits 4R100 Intermediate Steel)	1	E9TZ-7B066-C
36146	Pressure Plate, C-6/E4OD/4R100 Forward & Direct Clutch (Top) Flat (.337")	1-2	C6AZ-7B066-B
36146HD	Pressure Plate, C-6/E4OD Forward & Direct Clutch (Top) Flat (.220")	1-2	
36146J	Pressure Plate, C-6/E4OD/4R100 Forward Clutch (.250") (Top) Flat (Powerpack) 1989-Up	1	
36149	Pressure Plate, C-6/E4OD/4R100 Forward Clutch (Beveled)(Bottom)	1	C6AZ-7B066-A
36150	Pressure Plate, C-6 Reverse Clutch	1	
36150E	Pressure Plate, E4OD/4R100 Reverse Clutch (.547")	1	E9TZ-7B066-A
36152	Pressure Plate, E4OD/4R100 Coast Clutch (60 Teeth) Cast Iron Drum	1	E9TZ-7B066-E
36152A	Pressure Plate, 4R100 Coast Clutch (32 Teeth) Stamped Steel Drum (1998-Up)	1	

© Whatever It Takes Transmission Parts. Inc.

PART #	MODULATORS	QTY	REFERENCE #
26160	Modulator, C-6 White Stripe (Single Line) (Screw-In) 1966-72	1	C4AZ-7A377-B
36160A	Modulator, C-6 Pink Stripe Dual Line (Push-In) (Adjustable)1973-Up	1	
36160B	Modulator, C-6 Black Stripe (Single Line) (Push-In) 1973-Up	1	D3TZ-7A377-A
36160G	Modulator, C-6 Green Stripe (Single Line)(Push-In)1977-Up	1	D7OZ-7A377-A

PART #	MODULATORS (Continued)	QTY	REFERENCE #
36160P	Modulator, C-6 Purple Stripe (Single Line)(Push-In) 1975-Up	1	D5AZ-7A377-A
44162	Hose, C-6 Modulator (Elbow) 1966-Up	1	C1AZ-7B087-E
36163	Valve, C-6 Under Modulator Pin	1	D5AZ-7D080-A
S36163X	Valve, C-6 Oversized Modulator System (Sonnax)	1	36833-01K
36164K	Pin Kit, C-6 Modulator (4 Pieces)	1	D8AZ-7A380-A

PART #	VALVE BODY KITS	QTY	REFERENCE #
S36165	Valve Body Kit, C-6 (Superior)	1	KC6
T36165	Shift Kit, C-6 Diesel & Gas 1967-Up (Transgo)	1	SK6
S36165S	Valve Body Kit, C-6 (W/Steel Boost Valve & Sleeve) All Models (Superior)	1	KC-6-V
A36165E	Valve Body Kit, E4OD/4R100 1989-04 (Ratiotek)(Trancel)	1	
S36165E	Valve Body Kit, E4OD/4R100 1989-Up (Superior)	1	KE4OD
T36165E	Shift Kit, E4OD/4R100 1989-Up (Transgo)	1	SKE4OD
S36165ES	Valve Body Kit, E4OD/E4OD (W/Steel Boost Valve & Sleeve) 1989-Up (Superior)	1	KE4OD-V
A36169	2 Stage Pack, C-6 1967-Up (Superior)	1	51310-2
T36169	Reprogramming Kit, C-6 (Gas Only) 1967-Up Heavy Duty Towing & Competition (Transgo)	1	67-1 & 2
T36169E	Reprogramming Kit, E4OD Heavy Duty & Hi-Performance (Gas & Diesel) 1989-Up (Transgo)	1	E4OD-HD2
T36169EA	Reprogramming Kit, E4OD/4R100 Heavy Duty & Hi-Performance (Towing “Tugger”, Downhill Hold Back Use, Exhaust Brake, Diesel & Gas Hop Up) The Tugger Kit 1989-2004 (Transgo)	1	4R100-HD2
A36169EPT	Valve Body Kit, E4OD/4R100 Powertow 1989-04 (Fairbanks)	1	
A36171	Transaction Kit, C-6 1967-Up (Fairbanks)	1	51312
T36173	Reprogramming Kit, C-6 (Gas Only) 1967-Up Full Manual Control, Competition Stick Shift (Transgo)	1	67-3

PART #	OIL SEALING RINGS	QTY	REFERENCE #
36175	Ring Kit, C-6 (Metal) 1966-Up	1	
36175T	Ring Kit, C-6 (Teflon) 1966-Up	1	
36175E	Ring Kit, E4OD/4R100 1989-Up	1	
36178AT	Ring, E4OD/4R100 L/Up (On Stator, Front) (Teflon)	1	
36179	Ring, C-6/E4OD/4R100 Direct Clutch (Metal)	2	C6AZ-7D025-A
36179A	Ring, E4OD/4R100 Coast Clutch (Metal)	2	
36181	Ring, C-6/E4OD/4R100 Forward Clutch (Metal) 1966-Up	2	C6AZ-7D019-B
26189	Ring, C-6 Governor (Metal) 1966-Up	3	C4AZ-7D011-A

PART #	WASHERS & BEARINGS	QTY	REFERENCE #
36200	Washer Kit, C-6 W/Out Selective 8 Metal 1969-Up	1	
36200A	Washer Kit, C-6 W/Out Selective 10 Metal 1966-Up	1	
36200AA	Washer Kit, C-6 W/Plastic Selectives	1	
36200E	Washer Kit, E4OD/4R100 (W/3 Pinion Planets)(13 Pieces) 1989-Up	1	
36200EA	Washer Kit, E4OD (W/4 Pinion Planets) (12 Pieces) 1989-Up	1	
36200EB	Washer Kit, 4R100 (10 Pieces) 1998-Up	1	
36201A	Bearing Kit, C-6 (3 Bearings) Torrington	1	
36201E	Bearing Kit, E4OD Torrington	1	
36210A	Washer, C-6 Stator Support .057” (Metal)	1	C6AZ-7D014-A
36210AA	Washer, C-6 Stator Support .057” (Plastic)	1	C6AZ-7D014-AP
36210B	Washer, C-6 Stator, Support .074” (Metal)	1	C6AZ-7D014-B
36210BA	Washer, C-6 Stator Support .074” (Plastic)	1	C6AZ-7D014-BP
36210C	Washer, C-6 Stator Support .089” (Metal)	1	C6AZ-7D014-C
36210CA	Washer, C-6 Stator Support .089” (Plastic)	1	C6AZ-7D014-CP
36210D	Washer, C-6 Stator Support .104” (Metal)	1	C6AZ-7D014-D
36210DA	Washer, C-6 Stator Support .104” (Plastic)	1	C6AZ-7D014-DP
36210E	Washer, C-6 Stator Support .119” (Metal)	1	C6AZ-7D014-E
36210EA	Washer, C-6 Stator Support .119” (Plastic)	1	C6AZ-7D014-EP
36210G	Washer, E4OD/4R100 Stator Support (Metal)	1	
36210GA	Washer, E4OD/4R100 Stator (.063” Thick) (Plastic)	1	F1TZ-7D014-A
36211	Bearing, E4OD/4R100 Stator To Overdrive Sun Gear	1	F6TZ-7E486-AA
36213E	Ball Bearing, E4OD/4R100 Coast Clutch Drum To Stator (PTO Type Only) (Used In Place Of Bushing # 038)(.510”OD)(3.346”OD)(2.361”ID)	1	

© Whatever It Takes Transmission Parts. Inc.

36214	Washer, E4OD Overdrive Planet To Overdrive Sprag (W/2 Inner Tabs) (Metal) 1989-97	1	
36214A	Washer, E4OD Overdrive Planet To Overdrive Sprag (W/2 Inner Tabs) (Plastic) 1997-98	1	F1TZ-7L339-A
36214B	Washer, 4R100 Overdrive Planet To Overdrive Sprag 1999-Up (Plastic) This Washer Has a V Notch	1	F81Z-7L339-AA
36217	Bearing W/Races, E4OD/4R100 Overdrive Planet To Hub	1	F4TZ-7F240-A
36223	Use 36254C	1	
36224	Ball Bearing, E4OD/4R100 (Presses In Center Support) Aftermarket Type (1.000"ID, 2.000"OD)	1	R-16
36224A	Ball Bearing, E4OD/4R100 (Presses In Center Support) OE Type (1.180"ID, 1.850"OD)	1	E6DZ-76178-A
36225	Washer, E4OD/4R100 Center Support To Direct Drum (Plastic)	1	E9TZ-7L326-A
36225B	Washer, E4OD/4R100 Center Support To Direct Drum (Metal)	1	F1TZ-7L326-A
36226	Use 66211	1	
66211	Bearing W/Races, E4OD/4R100 Center Support To Forward Drum (.140" Thick, 2.600"OD, 1.930"ID)	1	E1FZ-7F374-A
36227	Washer, E4OD/4R100 Intermediate Drum To Sprag (Metal)	1	
36227A	Washer, E4OD/4R100 Intermediate Drum To Sprag (Plastic)	1	F3TZ-7G401-A
36229	Washer, C-6 Direct Drum To Forward Drum (3.030"ID At Tabs)	1	C6AZ-7C096-A
36229A	Washer, E4OD Direct Drum To Forward Drum 1989-97 (3.215"ID At Tabs)(1998-Up Does Not Use Washer Here)	1	E9TZ-7C096-A
36231	Washer, C-6/E4OD/4R100 Forward Drum To Hub (Plastic)	1	C9AZ-7D090-A
36231A	Washer, C-6/E4OD/4R100 Forward Drum To Hub (Metal)	1	
36232	Bearing W/Out Races, C-6 Forward Drum To Forward Planet (3 Piece Type) Also FitsC-6 Forward Planet To Sun Gear	1	C6AZ-7D234-B
36232A	Bearing W/Races, C-6/E4OD/4R100 Forward Drum To Forward Planet (1 Piece Type) (Also Fits 4R100 Forward Planet To Sun Gear)	1	E0AZ-7F231-A
36235	Washer, E4OD Forward Hub To Forward Planet (4 Tab) For 4 Gear Planet (Also Fits E4OD Rear Planet (Both Sides) 4 Gear)	3	E9TZ-7A166-A
36235A	Washer, E4OD Forward Hub To Forward Planet (3 NarrowTabs) For 3 Gear Forward Planet	3	F0TZ-7A166-C
36235AA	Washer, E4OD/4R100 Rear Planet (3 Wide Tabs) For 3 or 6 Gear Rear Planet	2	F0TZ-7A166-D
36235B	Washer, C-6 Front & Rear Planet (6 Tab) For 3 Gear Planet	2	C6AZ-7A166-A
36235C	Washer, C-6 Rear Planet (4 Tab) For 4 Gear Planet	2	C6SZ-7A166-A
36235CA	Bearing W/Races, E4OD/4R100 Forward Hub To Forward Planet 1997-Up	1	F81Z-7A166-AA
S36236AK	Shim Kit, C-6 (Goes Under #235)(.010")(10 Per Kit) Sonnax (6 Slots)	1	36428-Z
S36236BK	Shim Kit, C-6 (Goes Under #235)(.010")(10 Per Kit) Sonnax (4 Slots)	1	36428A-Z
S36236EK	Shim Kit, E4OD/4R100 (Goes Under #235)(.010") Sonnax (10 Per Kit)	1	36420-Z
36237	Race, C-6 Sun Gear (Front) 1966-77	1	C6AZ-7D236-A
36238	Bearing W/Out Races, C-6 Forward Planet To Sun Gear (3 Piece Type) Stays In Planet (Use 36232)	1	C6AZ-7D234-B
36238A	Bearing W/Races, C-6/E4OD Forward Planet To Sun Gear (1 Piece Type) Stays In Planet	1	E9TZ-7D234-A
36239	Race, C-6 Sun Gear (Rear) 1966-77	1	C6ZA-7D235-A
36243	Race, C-6/E4OD/4R100 Input Shell	1	C6AZ-7D066-B
S36243S	Shim, C-6 Sun Shell Saver (Fits Between Shell & Snap Ring) Sonnax	1	
26251	Washer, C-6 Output Hub To Sprag Race (3 Tang) 1970-76	1	
36254	Washer, C-6 Output Hub To Sprag Race (2 Tang) 1966-69	1	C6AZ-7D422-B
36254A	Washer, C-6 Output Hub To Sprag Race (3 Tang) 1970-76 (Use 26251)	1	
36254B	Bearing W/Race, C-6 Output Hub To Sprag Race	1	E7TZ-7D422-A
36254C	Bearing W/Races, C-6/E4OD/4R100 Output Hub To Sprag Race (Also Fits E4OD/4R100 Overdrive Hub To Center Support # 36223)	1-2	E6DZ-7G178-A
36263	Washer, C-6/E4OD Parking Gear To Case	1	D3TZ-7B368-A
36263A	Bearing W/Races, 4R100 Parking Gear To Case 1998-Up	1	
56268	Bearing, E4OD Output Shaft Pilot	1	
36378E	O-Ring, E4OD/4R100 Cooler Line Fitting (Large)	1	
36378EA	O-Ring, E4OD/4R100 Cooler Line Fitting (Small)	1	
36286	Washer, C-6/E4OD Sprag To Snap Ring	1	3717682

PART #	GASKETS & RUBBER COMPONENTS	QTY	REFERENCE #
36300	Gasket, C-6 Bottom Pan	1	C6AZ-7A191-B
36300E	Gasket, E4OD/4R100 Bottom Pan (Cork) 1989-Up	1	E9TZ-7A191-A
36300EW	Gasket, E4OD/4R100 Bottom Pan (Bonded Rubber) 1996-Up	1	F6TZ-7A191-A
36305	Gasket, C-6 Extension Housing	1	C6AZ-7086-A
36305E	Gasket, E4OD/4R100 Extension Housing	1	E9TZ-7086-B
M301317B	Gasket, C-6 Adapter To Transfer Case (203 Transfer Case)	1	
M302317A	Gasket, C-6 Adapter To Transfer Case (205 Transfer Case)	1	
M304317A	Gasket, C-6/E4OD Adapter To transfer Case (208 Transfer Case)	1	
36307A	Gasket, C-6 Intermediate Servo Cover	1	D4AZ-7D026-A
S36307AK	Seal Kit, C-6 (R-Code Servo Cover)(Gasket & 5 O-Rings) For S36907DK (Sonnax)	1	
36309E	Gasket, E4OD/4R100 Pump Bolt Washer	9	E9TZ-7G379-A
36310	Gasket, C-6 Pump	1	E0AZ-7A136-B
36310E	Gasket, E4OD/4R100 Pump	1	E9TZ-7A136-A
36311	O-Ring, C-6 Pump	1	C6AZ-7A248-B

© Whatever It Takes Transmission Parts. Inc.

PART #	GASKETS & RUBBER COMPONENTS (Continued)	QTY	REFERENCE #
36311E	O-Ring, E4OD/4R100 Pump	1	E9TZ-7A248-A
36316E	Gasket Kit, E4OD Center Support Plate (5 Per Kit) (Sonnax)	1	36742G
36319E	Gasket, 4R100 PTO Cover 1998-Up	1	
36320E	Gasket, E4OD Spacer Plate To Case (Upper) 1989 Only (White Stripe)	1	E9TZ-7C155-B
36320EA	Gasket, E4OD Spacer Plate To Case (Upper) 1990-95	1	F1TZ-7C155-A
36320EB	Gasket, E4OD Spacer Plate To Case (Upper) 1996-97	1	F6TZ-7C155-A
36320EC	Gasket, E4OD/4R100 Spacer Plate To Case (Upper) 1998-05 (Light Blue Stripe)	1	
36321	Gasket, C-6 Valve Body (Lower) 1967-Up	1	D6AZ-7D100-A
36321A	Gasket, C-6 Valve Body (Lower) 1966	1	
36321E	Gasket, E4OD Valve Body To Spacer Plate (Lower) 1989 (White Stripe)	1	E9TZ-7D100-B
36321EA	Gasket, E4OD Valve Body To Spacer Plate (Lower) 1990-95 (.008" Thick)(Yellow Stripe)	1	F0TZ-7D100-A
36321EAA	Gasket, E4OD Valve Body To Spacer Plate (Lower) 1996-97 (.008" Thick)(No Stripe)	1	
36321EB	Gasket, E4OD/4R100 Valve Body To Spacer Plate (Lower) 1998-05 (.008"Thick)(No Stripe)	1	F6TZ-7D100-Z
36326	Gasket, C-6 Oil Filter	1	C6AZ-7E062-A
36330	Lip Seal, E4OD/4R100 Intermediate & Overdrive Clutch (Inner) (Also Filts E4OD Overdrive Clutch (Inner) W/Aluminum Piston 1989-94)	2	E9TZ-7F252-A
36331	Lip Seal, E4OD Overdrive Clutch (Outer) W/Aluminum Piston 1989-95	1	E9TZ-7A548-A
36332	Lip Seal, E4OD/4R100 Intermediate Clutch (Outer) 1989-Up	1	E9TZ-7F224-A
36334	Lip Seal, C-6/E4OD/4R100 Forward Clutch (Inner)	1	E9TZ-7A548-F
36335A	Lip Seal, C-6/E4OD/4R100 Forward Clutch (Outer)	1	D6AZ-7A548-A
36336	Lathe Cut Seal, C-6 Direct Clutch (Inner) L1976-Up	1	C8AZ-7C099-A
36336E	Lip Seal, E4OD/4R100 Direct Clutch (Inner) 1989-04	1	
36337	Lathe Cut Seal, C-6 Direct Clutch (Outer)	1	C8AZ-7A548-C
36337E	Lip Seal, E4OD/4R100 Direct Clutch (Outer) 1989-04	1	
36337V	Lip Seal, C6 Direct Clutch (Outer)(Viton) 1989-Up	1	
36338	Lathe Cut Seal, C-6/E4OD Reverse Clutch (Inner) 1968-95	1	C7AZ-7D404-A
36338B	Lip Seal, E4OD/4R100 Reverse Clutch (Inner) 1996-Up	1	F6TZ-7D404-A
36339	Lathe Cut Seal, C-6/E4OD Reverse Clutch (Outer) 1966-95	1	C8AZ-7D403-A
36339B	Lip Seal, E4OD/4R100 Reverse Clutch (Outer) 1996-Up	1	F6TZ-7F403-A
36340	Lip Seal, E4OD/4R100 Coast Clutch (Inner) Cast Iron Drum	1	E9TZ-7A548-C
36341	Lip Seal, E4OD/4R100 Coast Clutch (Outer) Cast Iron Drum	1	E9TZ-7A548-B
36347	O-Ring, E4OD/4R100 Solenoid Pack Connector 1989-Up	1	87034-S94
36349	O-Ring, C-6 Throttle Shaft & Modulator	1	386078-S
36349A	Seal, C-6 Throttle Shaft (W/4 Lobes) Replaces 36349	1	
36361A	O-Ring, C-6 Intermediate Servo Piston (Small) 1.700"OD	1	
36361AA	O-Ring, C-6 Intermediate Servo Piston (Small) 1.750"OD	1	
36361AB	O-Ring, C-6 Intermediate Servo Piston (Small) 1.760"OD	1	
36361AC	O-Ring, C-6 Intermediate Servo Piston (Small) 1.785"OD	1	
36361AD	O-Ring, C-6 Intermediate Servo Piston (Small) 2.030"OD	1	
36361AE	O-Ring, C-6 Intermediate Servo Piston (Small) 2.060"OD	1	
36361AG	O-Ring, C-6 Intermediate Servo Piston (Small) 2.180"OD	1	
36361B	O-Ring, C-6 Intermediate Servo Piston (Large) 2.344"OD	1	
36361BA	O-Ring, C-6 Intermediate Servo Piston (Large) 2.391"OD	1	
36361BB	O-Ring, C-6 Intermediate Servo Piston (Large) 2.690"OD	1	
36361BC	O-Ring, C-6 Intermediate Servo Piston (Large) 2.725"OD	1	
36361BD	O-Ring, C-6 Intermediate Servo Piston (Large) 2.735"OD	1	
36361BE	O-Ring, C-6 Intermediate Servo Piston (Large) 2.782"OD	1	
36361BG	O-Ring, C-6 Intermediate Servo Piston (Large) 3.151"OD	1	
36362	O-Ring, C-6 Intermediate Servo Cover	1	
36364T	O-Ring, C-6 Cooler Line	1	380892-S94
103368	O-Ring, C-6 Speed-O Sleeve (Inner)	1	
36390	External Seal Kit, C-6 (W/Pan Gasket) 1966-Up	1	
36390E	External Seal Kit, E4OD/4R100 (W/Pan Gasket) 1989-Up	1	

PART #	TECHNICAL MANUALS	QTY	REFERENCE #
36400	Tech Manual, C-6	1	83-C6TM
36400E	Tech Manual, E4OD	1	83-E4ODTM
36400EA	Tech Manual, 4R100 Ford Trucks 1999-Up	1	4R100
36400EB	Tech Manual, 4R100 (Update Hand Book) (ATSG)	1	
A36400ED-1	Diagnostic Manual, E4OD ("Are They Really That Tough") Book One (ATRA)	1	
A36400ED-2	Diagnostic Manual, E4OD ("Are They Really That Tough") Book Two (ATRA)	1	
36400EH	Handbook, E4OD 1989-96 Update	1	83-E4ODTM-U1
36401EA	Tech Manual On CD, 4R100 Trucks 1999-Up	1	
36401EB	Handbook On CD, 4R100 (Update Hand Book)(ATSG)	1	
36401EH	Handbook On CD, E4OD 1989-96 Update (Replaces 36400EH)	1	
36407E	Video, E4OD Technical Video (ATSG)	1	83-SGVT025
M402-8	ATSM-8 Trouble Shooting: Common Complaints/Fixes For E4OD	1	TTSM-8

© Whatever It Takes Transmission Parts. Inc.

PART #	ELECTRICAL COMPONENTS	QTY	REFERENCE #
26410	Switch, C-6 Neutral Safety (With 1 Round 4 Blade Connector)	1	E2DZ-7A242-A
36410A	Switch, E4OD Manual Lever Position Switch 1990-96 Cast # F0	1	F5TZ-7A247-A
36410B	Switch, E4OD Manual Lever Position Switch 1995-96 (Use 36410A)	1	F5TZ-7A247-B
36410C	Switch, E4OD/4R100 Manual Lever Position Switch (Cast # F7) 1997-04 (12 Pin Digital)(Ford Has Changed To An 11 Pin Switch But Still Fits 12 Pin)	1	F7TZ-7F239-AA
26414	Switch, C-6 Spark Control	1	D2AZ-7E440-A
36420	Solenoid Pack, E4OD 1989-94 (9 Pin) (.100” Thick Plastic Connector)	1	E9TZ-7G391-A
36420AA	Solenoid Pack, E4OD/4R100 1995-97 (Diesel) Non-PWM Units (Also Fits 95-98 (Gas) Non-PWM Units)	1	F81Z-7G391-BA
36420AC	Solenoid Pack, 4R100 1998-Up (Diesel) PWM Units (Also Fits 1999-Up (Gas) PWM Units)	1	F81Z-7G391-CB
36438	Sensor, 4R100 Turbine Shaft Speed (Non-PTO) 1998-04 (Also Fits 4R100 Output Shaft Speed Sensor, All Models)	1	F817-7M101-AA
36438A	Sensor, 4R100 Turbine Shaft Speed (PTO Models) 1998-Up	1	
36445EK	Repair Harness End, E4OD Plugs 1989-94	1	
36445EAK	Repair Harness End, E4OD Plugs 1995-Up	1	
86445ECK	Repair Kit, AXOD/AXODE/AX4N Speed Sensor Wire Harness Connector (Fits 36438, 36774D, 86774B, 86774C, 86774H, F85Z-2L373AB)	1	
F85Z-2L373AB	Speed Sensor, Rear Axle Housing (Output Speed) 1990-97 Aerostar, 1990 Bronco II, 1990-06 E-150/250/350, 1990-03 F-150, 1991-01 Expedition/Mountaineer, 1990-99 F250, 1999-04 SD F250-F450, 2000-06 Excursion, 1990-03 Ranger, 2000-01 Sporttrac, 1997-02 Expedition	1	
36447C	Controller, E4OD Coast Clutch 1989-94	1	
36447CA	Controller, E4OD Coast Clutch 1995-98	1	
36447E	Interceptor, E4OD Adjustable Electron Modulator 1989-94 (Allows TCC & Line Pressure To Be Fine Tuned)	1	INT36A
36447EA	Interceptor, E4OD Adjustable Electron Modulator 1995-Up	1	INT36B
36447L	Adaptor, E4OD 1988-92 (For The Rostra LU1)	1	
LU1	Lockup Delay Module For Vehicle W/Speed Sensor	1	

PART #	MISC. COMPONENTS	QTY	REFERENCE #
M462F	Union, 5/16”	1	
36484E	Orifice Cup Plug, E4OD/4R100 Output Shaft (Front) Replaces Bushing	1	39150-S
26487	Grommet, C-6 Linkage (5/8”ID)	1	D4AZ-7341-A
26487A	Grommet, C-6 Linkage (5/16”ID)	1	
26487B	Grommet, C-6 Passing Gear (Narrow Groove)	1	E0AZ-7F330-A
26487BA	Grommet, C-6 Passing Gear (Wide Groove)	1	
26487C	E-Clip, C-6 Linkage	1	
86490H	Vent, 4R100 Case 1999-Up	1	
36495	Pick Up Tube, C-6 4x4 Filter	1	D3TZ-7A102-C
T76496C	Retaining Clip, C-6 Cooler Line (Push-In) Teckpak	1	

PART #	HARD PARTS	QTY	REFERENCE #
36500	Pump, C-6 1966-E67	1	
36500A	Pump, C-6 (Gas) 1967-Up (W/Drain Back Valve)	1	C8AZ-7A103-B
36500B	Pump, C-6 (Gas & Diesel) 1983-Up (W/Out Drain Back Valve)	1	
36500C	Pump, E4OD (Cast # RFE9 or RFF1) 11 Bolt (Less Valves) 1989-94	1	F5TZ-7A103-A
36500CA	Pump, E4OD (Cast # RFF5) 11 Bolt (Less Valves) 1995-98 (9 Teeth Inner Gear)Retro Fits To 1989	1	F81Z-7A103-BA
36500D	Pump, E4OD/4R100 (Cast # RF-F8) 12 Bolt (Less Valves) 1998-Up (Uses A Cast Iron Coast Clutch Drum)	1	
36500DA	Pump, 4R100 (Cast # RFF8) 12 Bolt (Less Valves) 1998-Up (Uses A Stamped Steel Coast Clutch Drum) Non-PWM	1	XC3Z-7A103-EA
36500DB	Pump, 4R100 (Cast # RFF8) 12 Bolt (Less Valves) 1998-Up (Uses A Stamped Steel Coast Clutch Drum) PWM Type	1	F81Z-7A103-CA

PART #	PUMP COMPONENTS	QTY	REFERENCE #
36507-3K	Shudder Spring Kit, E4OD (In Plug)	1	SGSF-E4OD
36507A	Poppet Valve, C-6 Drain Back (Valve Only-No Orifice Plug) This is the Valve Only—Does Not Include Cup Plug	1	
36507AK	Poppet Valve Set, C-6 Drain Back (In Stator) (Valves & Orifice Plugs) (5 Per Pack)	1	
36507CCK	Valve Assembly, E4OD TCC Control (Valve, Spring, Plug, Clip)1989-97(.430”OD Valve) Fits 11 Bolt Stator	1	
36507CDK	Valve Assembly, 4R100 TCC Control (Valve, Spring, Plug, Clip) (Diesel) 1998-Up (.600”OD On Valve End Next To Spring)	1	

© Whatever It Takes Transmission Parts. Inc.

PART #	PUMP COMPONENTS (Continued)	QTY	REFERENCE #
S36507CEK	Valve Assembly, 4R100 TCC Control Boost Valve & Sleeve (Sonnax) For PWM Units Only	1	
36507CGK	Valve Assembly, E4OD/4R100 TCC Control (Valve, Spring, Plug, Clip) (Gas) 1998-Up (.530"OD Valve)	1	
36507CK	Valve Assembly, E4OD/4R100 TCC Lock-Up Kit On-Off (Transgo) (Valve, Spring, Bushing) Converts Long Soft Pulse Lock-Up To A Short Crisp On/Off Lock-up) Use with T36165E	1	
36507E-1A	Drain Back Valve, E4OD/4R100 W/Spring (In Stator)	1	E9TZ-7H132-B
36507EK	Pump Kit, E4OD (Code 62 Fix) (Bushing, Drain Back Valve & Plugs)	1	
S36507G-1	Valve, E4OD Line To Lube Pressure Regulator (W/Check Valve) Sonnax	1	
S36507PAK	Valve Assembly, E4OD/4R100 Pressure Regulator Boost (Sonnax) Factory Style No O-Rings (W/Valve & Sleeve)	1	
36507PK	Valve Assembly, E4OD/4R100 Pressure Regulator Boost (Valve & Sleeve) Steel (Superior)	1	E9TZ-7D003-AA
S36507PK-OS	Pressure Regulator Kit, E4OD/4R100 (Oversize)(Contains Pressure Regulator Valve, Spring, Boost Valve, And Boost Sleeve)(Sonnax)(Must Use T-F-36424-TL16C)	1	
T-F-36424-TL16C	Tool For S36507PK-OS	1	
36507PPK	Valve Assembly, E4OD/4R100 Pressure Regulator 1989-Up (Valve, 2 Springs, Spring Retainer, Boost Valve & Sleeve, Clip)	1	

PART #	HARD PARTS (Continued)	QTY	REFERENCE #
36510	Pump Body, C-6 1966-Up	1	
36510CA	Pump Body, E4OD (Cast # RFE9, RFF1, RFF5) 11 Bolt 1989-98	1	
36510D	Pump Body, E4OD/4R100 (Cast # RFF8)(12 Bolt) 1998-Up	1	
36520	Stator, C-6 1966-E67	1	
36520A	Stator, C-6 (Gas) L1967-Up (W/Drain Back Valve) Can Use 36520B	1	
36520B	Stator, C-6 (Gas & Diesel) 1983-Up (No Drain Back Valve)	1	
36520C	Stator, E4OD (Less Valves) (Cast # RFEP or RFF1) 1989-94	1	
36520CA	Stator, E4OD (Less Valves) (Cast # RFF5) Bushing Type 1995-97	1	
36520D	Stator, E4OD/4R100 (Cast # RF-F8)(12 Bolts To Body) 1998-Up (Less Valves) (Uses A Cast Iron Coast Clutch Drum	1	
36520DA	Stator, 4R100 (Non PWM) (Gas & Diesel)(12 Bolt) 1998-Up (Uses Stamped Steel Coast Clutch Drum) (Less Valves)	1	C6AP-7C010-B
36520DB	Stator, 4R100 (PWM) (Gas & Diesel)(12 Bolt) 1998-Up (Uses Stamped Steel Coast Clutch Drum) (Less Valves)	1	
36530	Pump Gears, C-6	1	
36530X	Pump Gears, C-6 (Oversized)	1	
36530A	Pump Gears, E4OD (10 Teeth Inner Gear)(3.950"OD Outer Gear) 1989-94	1	
36530B	Pump Gears, E4OD/4R100 (9 Teeth Inner Gear)(4.083"OD Outer Gear) 1995-Up	1	
36530BX	Pump Gears, E4OD/4R100 (9 Teeth Inner Gear) (Oversize) 1995-Up	1	
36545	Cylinder, E4OD Intermediate/Overdrive Clutch (For Aluminum Pistons) 1989-95	1	
36545A	Cylinder, E4OD/4R100 Intermediate/Overdrive Clutch(Uses Bonded Overdrive Piston) 96-Up	1	F6TZ-7G384-AA
36554	Drum, C-6 Forward Clutch (31 Splines, 4 Clutch) 1966-E71	1	E9TZ-7A548-C
36554A	Drum, C-6 Forward Clutch (31 Splines, 5 Clutch) 1966-E71	1	
36554B	Drum, C-6 Forward Clutch (31 Splines, 3 Clutch) 1966-E71	1	
36554C	Drum, C-6 Forward Clutch (30 Splines, 5 Clutch) 1971-E76	1	
36554D	Drum, C-6 Forward Clutch (30 Splines, 4 Clutch) L1976-Up	1	
36554E	Drum, C-6 Forward Clutch (30 Splines, 4 Clutch) L1971-Up	1	
36554EA	Drum, C-6 Forward Clutch (30 Splines, 3 Clutch) 1971-E76	1	
36554G	Drum, C-6 Forward Clutch (30 Splines, 5 Clutch) L1976-Up	1	
36554H	Drum, E4OD/4R100 Forward Clutch (4 Clutch) 1989-Up (Spline Length Is The Full Length of The Drum Bore)	1	
36554HA	Drum, E4OD/4R100 Forward Clutch (4 Clutch) 1998-Up (Spline Length Is Only 1/2 The Length Of The Drum Bore) (Retro Fits To 1989)	1	F81Z-7A360-AA
36554J	Drum, E4OD/4R100 Forward Clutch (3 Clutch) 1989-Up	1	
36555	Drum, C-6 Direct Clutch (4 Clutch) 1966-Up	1	
36555A	Drum, C-6 Direct Clutch (3 Clutch) 1966-Up	1	
36555AC	Drum, C-6 Direct Clutch (5 Clutch) 1966-Up (This is a 3 Clutch With a New Snap Ring Groove Cut For 5 Clutch)	1	
36555B	Drum, E4OD Direct Clutch (3 Clutch) W/Out Sprag (W/2 Feed Holes) 1989-94	1	E9TZ-7D044-A
36555BA	Drum, E4OD Direct Clutch (3 Clutch) W/Out Sprag (W/1 Feed Hole) 1995-97 (Uses A Washer # 229)	1	
36555BB	Drum, E4OD/4R100 Direct Clutch (3 Clutch) W/Out Sprag (W/1 Feed Hole)1998-Up (No Longer Uses A Washer # 229)	1	
36555C	Drum, E4OD/4R100 Direct Clutch (4 Clutch) W/Out Sprag (W/2 Feed Holes) 1989-94	1	
36555CK	Drum Kit, 4R100 Direct Clutch (4 Clutch) W/36965E & 229 Washer (Use This Kit To Replace Diode Type Drum) If Customer Does Not Have A Kit W/50 Teeth Intermediate Frictions, Sell 3-36104EA Frictions	1	
36555CA	Drum, E4OD Direct Clutch (4 Clutch) W/Out Sprag (W/1 Feed Hole) 1995-97 (Uses A Washer # 229)	1	

FORD

© Whatever It Takes Transmission Parts. Inc.

36555CB	Drum, E4OD/4R100 Direct Clutch (4 Clutch) W/Out Sprag (W/1 Feed Hole) 1998-Up (No Longer Uses A Washer # 229)	1	
36555CBK	Drum Kit, 4R100 Direct With Sprag (4 Clutch) With 1 Feed Hole 1998-Up (Can Use This Kit To Replace Diode Type Drum) Does NOt Use #229 (If Customer Does Not Kit With 50 Teeth Intermediate Frictions, Sell Three 36104EA Frictions)	1	
36555D	Drum, E4OD/4R100 Direct Clutch (5 Clutch) W/Out Sprag (W/2 Feed Holes) 1989-94	1	
36555DK	Drum Kit, 4R100 Direct Clutch (5 Clutch) W/36965E & 229 Washer (Use This Kit To Replace Diode Type Drum) If Customer Does Not Have A Kit W/50 Teeth Intermediate Frictions, Sell 3-36104EA Frictions	1	
36555DA	Drum, E4OD Direct Clutch (5 Clutch) W/Out Sprag (W/1 Feed Hole) 1995-97 (Uses A Washer # 229)	1	
36555DB	Drum, E4OD/4R100 Direct Clutch (5 Clutch) W/Out Sprag (W/1 Feed Hole) 1998-Up (No Longer Uses A Washer # 229)	1	
36555DBK	Drum Kit, 4R100 Direct With Sprag (5 Clutch) With 1 Feed Hole 1998-Up (Can Use This Kit To Replace Diode Type Drum) Does Not Use #229 (If Customer Does Not Have A Kit With 50 Teeth Intermediate Frictions, Sell Three 36104EA Frictions)	1	
36555E	Drum, 4R100 Direct Clutch (4 Clutch) W/Out Diode 2000-01 (Has 16 Lugs For Mechanical Diode) Can Use 36555CK	1	
36555F	Drum, 4R100 Direct Clutch (5 Clutch) W/Out Diode 2000-01 (Has 16 Lugs For Mechanical Diode) Can Use 36555DK	1	
36559	Drum, E4OD Coast Clutch (W/Out Electronic Pick-Up) Cast Iron (W/Groove For Inner Lip Seal)	1	E9TZ-7A548-E
36559A	Drum, E4OD Coast Clutch (W/Out Electronic Pick-Up) Cast Iron (No Inner Lip Seal Groove) Uses Bonded Piston	1	
36559B	Drum, E4OD/4R100 Coast Clutch (W/Electronic Pick-Up) Cast Iron	1	
36559D	Drum, 4R100 Coast Clutch W/Sun Gear (Stamped Steel) W/Out PTO	1	1C3Z-7G387-AA
36559E	Drum, 4R100 Coast Clutch (With Sun Gear)(2 Clutch)(Stamped Steel) With PTO	1	
36559EA	Drum, 4R100 Coast Clutch (With Sun Gear)(3 Clutch)(Stamped Steel) With PTO	1	
36560	Piston Kit, E4OD Overdrive Clutch (Aluminum Piston)	1	
36560A	Piston Kit, E4OD/4R100 Overdrive Clutch (Bonded Piston)	1	
36562	Piston Kit, E4OD/4R100 Intermediate Clutch (Aluminum Piston)	1	
36564	Piston Kit, C-6 Forward Clutch 1966-76	1	
36564A	Piston Kit, C-6/E4OD/4R100 Forward Clutch L1976-Up	1	
36565	Piston Kit, E4OD/4R100 Direct Clutch (Cast # E9TP-7A262-CA) (Used With Washer Type Direct Drum) 1989-98	1	
36565A	Piston Kit, C-6 Direct Clutch	1	
36565B	Piston Kit, E4OD/4R100 Direct Clutch (CAst # YC3P-7A262-AA) (Used With Bearing Type Direct Drum) 1998-Up	1	
36566	Piston Kit, C-6 Reverse Clutch 1966-E76	1	
36566A	Piston Kit, C-6 Reverse Clutch L1976-E86	1	
36566AA	Piston Kit, C-6 Reverse Clutch L1986-Up (3.187”ID/4.925”OD Spring Retainer)	1	
36566B	Piston Kit, C-6 Reverse Clutch L1986-Up (3.00”ID / 4.925”OD Spring Retainer)	1	
36566BA	Piston Kit, E4OD Reverse Clutch 1989-Up (3.187”ID / 4.925”OD Spring Retainer)	1	
36566C	Piston Kit, E4OD Reverse Clutch 1989-Up (3.00”ID / 4.925”OD Spring Retainer)	1	
36566CA	Piston Kit, 4R100 Reverse Clutch 1998-Up (3.00”ID / 5.190”OD Spring Retainer)	1	
36569	Piston Kit, E4OD/4R100 Coast Clutch (For Cast Iron Drum) 1989-98	1	
36569A	Piston Kit, 4R100 Coast Clutch (For Stamped Steel Drum) 1998-Up	1	
36576	Clutch Hub, C-6/E4OD Reverse Clutch (W/12 Lugs For Planet) 1966-92 (Has Snap Ring Groove For The Sprag)	1	F3TZ-7D067-A
36576A	Clutch Hub, C-6/E4OD Reverse Clutch (W/12 Lugs For Planet) 1993-97 (No Snap Ring Groove For The Sprag)(Sprag Has Plastic Housing)	1	F3TZ-7B067-A
36576C	Clutch Hub, E4OD/4R100 Reverse Clutch (W/24 Lugs For Planet) 1998-Up	1	F7TZ-7B067-AC
36580A	Planet, E4OD Overdrive (3 Gear) Aluminum (1 7/8” Long Hub) 1989-93	1	
36580AA	Planet, E4OD Overdrive (3 Gear) Aluminum (1 7/16” Long Hub) 1994-98	1	
36580AB	Planet, E4OD/4R100 Overdrive (3 Gear) Steel (1 7/16” Long Hub) 1999-Up	1	F5TZ-7B446-CA
36580B	Planet, E4OD Overdrive (4 Gear) Aluminum (1 7/16” Long Hub) 1994-98	1	F2TZ-7B446-A
36580BA	Planet, E4OD Overdrive (4 Gear) Aluminum (1 7/8” Long Hub) 1989-93	1	
36580BB	Planet, E4OD Overdrive (4 Gear) Steel (1 7/16” Long Hub) 1994-98 (Uses Washer # 214 With Inner Tabs)(Metal & Plastic)	1	F5TZ-7B446-A
36580BBK	Planet Kit, E4OD Overdrive (4 Gear) Steel (W/Input Shaft) 1994-98	1	F4TZ-7B446-B
36580BC	Planet, E4OD Overdrive (4 Gear) Steel (1 7/8” Long Hub) 1989-93	1	
36580BD	Planet, 4R100 Overdrive (4 Gear) Steel (1 7/16” Long Hub) 1999-Up (Uses Washer # 214 With 1 Outer Tab)(Plastic) When Used W/36214B This Will Retro-Fit 36580BB	1	1C3Z-7B446-BA
36582	Planet, C-6 Forward (3 Gear) Aluminum (With 3 Piece Bearing Inside) 1966-E76	1	
36582-2	Sleeve, C-6/E4OD/4R100 Forward Planet Repair	1	36440-01
36582A	Planet, C-6 Forward (3 Gear) Aluminum (With 1 Piece Bearing Inside) L1976-Up	1	
36582B	Planet, E4OD Forward (4 Gear) Aluminum (Washer Type) 1989-96 Can Use 36582BA With 36602BA	1	E9TZ-7A398-A

© Whatever It Takes Transmission Parts. Inc.

PART #	HARD PARTS (Continued)	QTY	REFERENCE #
36582BA	Planet, E4OD/4R100 Forward (4 Gear) Aluminum (Bearing Type) 1997-Up	1	F7TZ-7A398-BA
36582C	Planet, E4OD Forward (3 Gear) Aluminum (Washer Type) 1989-96	1	
36582CA	Planet, E4OD/4R100 Forward (3 Gear) Aluminum (Bearing Type) 1997-Up	1	
36582D	Planet, E4OD/4R100 Forward (6 Gear) Steel (Bearing Type) 1997-Up	1	F81Z-7A398-CA
36584	Planet, C-6 Rear (3 Gear) Aluminum 1966-Up	1	
36584A	Planet, C-6 Rear (4 Gear) Aluminum 1966-Up	1	
36584B	Planet, E4OD Rear (3 Gear) Aluminum (W/12 Lug Hub) 1989-97	1	
36584C	Planet, E4OD Rear (4 Gear) Aluminum (W/12 Lug Hub) 1989-97	1	F2TZ-7D006-A
36584CA	Planet, E4OD/4R100 Rear (3 Gear) Aluminum (W/24 Lug Hub) 1998-Up	1	F7TZ-7D006-AA
36584CB	Planet, E4OD/4R100 Rear (4 Gear) Aluminum (W/24 Lug Hub) 1998-Up	1	F7TZ-7D006-BA
36584CD	Planet, E4OD REar (6 Gear Steel With 12 Lug Hub) 1989-97	1	
36584D	Planet, E4OD/4R100 Rear (6 Gear) Steel (W/24 Lug Hub) 1998-Up	1	F8TZ-7D006-AA
36590	Ring Gear, E4OD Overdrive Planet 1989-97	1	E9TZ-7A153-A
36590A	Ring Gear, 4R100 Overdrive Planet 1998-Up	1	F81Z-7A153-AA
36592	Ring Gear, C-6 Forward Planet L1967-E76	1	
36592A	Ring Gear, C-6 Forward Planet L1976-Up	1	E9TZ-7D392-A
36592B	Ring Gear, E4OD/4R100 Forward Planet 1989-Up	1	F81Z-7D392-AB
36594	Ring Gear, C-6 Rear Planet	1	
36594A	Ring Gear, E4OD/4R100 Rear Planet 1989-Up	1	E9TZ-7A153-B
36602	Hub, C-6 Forward Planet Ring Gear 1966-E76	1	
36602A	Hub, C-6 Forward Planet Ring Gear L1976-Up	1	
36602AK	Hub Kit, C-6 Forward Planet Ring Gear And Hub L1976-Up	1	
36602B	Hub, E4OD Forward Planet Ring Gear (Washer Type) 1989-96	1	
36602BA	Hub, E4OD/4R100 Forward Planet Ring Gear (Bearing Type) 1997-Up	1	F7TZ-7B067-AB
36604	Hub, C-6 Output (2 Tang Washer Type) Long Splines 1966-E67	1	
36604A	Hub, C-6 Output (2 Tang Washer Type) Short Splines 1966-E67	1	
36604B	Hub, C-6 Output (3 Tang Washer Type) L1967-87	1	
36604C	Hub, C-6/E4OD/4R100 Output (Bearing Type) 1988-Up	1	F81Z-7D164-AA
36610	Sun Gear, E4OD/4R100 Overdrive (Used With Cast Iron Drum) 1989-98	1	E9TZ-7D063-B
36610A	Sun Gear, E4OD/4R100 Overdrive (Use With Stamped Steel Drum) 1998-Up (The Sun Gear Is Pressed Onto The Coast Clutch Drum)	1	F81Z-7D063-A
36612	Sun Gear, C-6 Forward 1966-Up	1	
36612A	Sun Gear, E4OD/4R100 Forward 1989-Up	1	E9TZ-7D063-A
36622	Shell, C-6 Input 1966-Up	1	
36622B	Shell, E4OD/4R100 Input (Retro Fits Early) 1998-Up	1	YC3Z-7D064-AA
36622BA	Shell, E4OD/4R100 Input (Retro Fits Early) 1998-Up (Hardened)	1	YC3Z-7D064-BA
36630	Center Support, E4OD/4R100 (Aluminum Plate Only) 1989-Up (These Are Machined & Comes With S36630-2)	1	E9TZ-7A130-B
36636	Support, E4OD Direct Drum (Steel Half) 1989-93	1	
36636B	Support, E4OD Direct Drum (Steel Half) OE Type W/Bearing 1994	1	
36636BK	Support Kit, E4OD Direct Drum (Contains: 36636B,36375B,36484E,36630,36223,36224) 1994...(Updated, Will Retro Fit 1989-Up)(Can Use 36636BAK)(These Are Machined & Comes With S36630-2)	1	F4TZ-7A130-B
36636BA	Support, E4OD/4R100 Direct Drum (With 36630) W/Bearing (OE Type) 1995-Up	1	F4TZ-7A130-A
36636BAK	Support Kit, E4OD/4R100 Direct Drum (Contains: 36636B,36675BA,36484E,36630,26223, 36224,36580AA,36670C) 1995-Up (Will Retro Fit 1989-Up)(These Are Machined & Comes With S36630-2)	1	

PART #	SPRAGS & ONE WAY CLUTCHES	QTY	REFERENCE #
36640B	Sprag Assembly, E4OD Overdrive (34 Lugs) 3 Pieces (Metal Cage) 1989-94	1	
36640BA	Sprag Assembly, E4OD Overdrive (12 Rollers) 3 Pieces (Plastic Cage)(4.080”OD) 1995-Up	1	F5TZ-7A089-A
36640C	Sprag Assembly, E4OD Overdrive (12 Lugs) 3 Pieces (4.080”ID #661) 1995-98 (Some)	1	
36640D	Sprag Assembly, E4OD Overdrive (26 Lugs) 3 Pieces (4.080”ID #661) 1995-98 (Some)	1	
36642	Sprag Assembly, E4OD/4R100 Intermediate (34 Lugs) W/Outer Race 1989-Up	1	
36642A	Sprag Assembly, E4OD Intermediate (24 Lugs) W/Outer Race	1	
36642E	Mechanical Diode, 4R100 Intermediate (W/16 Inner Lugs) 2000-01 (Use 36555CK Or 555DK)	1	
36650B	Sprag, E4OD Overdrive (34 Elements) Metal Cage 1989-94	1	8623056
36650BA	Sprag, E4OD Overdrive (12 Rollers) Plastic Cage (4.080”OD) 1995-Up (Can Use 86656A)	1	7471019
36650BB	Sprag, 4R100 Overdrive (12 Rollers) Plastic Cage 1998-Up (3.313”OD)	1	7471036
36652	Sprag, E4OD/4R100 Intermediate (34 Lugs) 1989-Up	1	
36652A	Sprag, E4OD Intermediate (24 Lugs)	1	
36652B	Sprag, E4OD/4R100 Intermediate (45 Lugs) Heavy Duty 1989-Up	1	
36654A	Sprag, C-6/E4OD Rear (Spring, Retainer, Rollers) 1966-92	1	D0AZ-7A089-A
36654A-3	Cage And Springs, C-6/E4OD Rear Sprag (No Rollers) 1966-92	1	
36654AK	Sprag, C-6/E4OD Rear (Spring, Retainer, Rollers, Brass Washers) 1966-92	1	
36654D	Sprag, C-6/E4OD Rear (16 Roller W/Plastic Cage) 1989-4/97	1	F3TZ-7A089-A
36654E	Sprag, E4OD/4R100 Rear (17 Roller W/Plastic Cage) 5/97-Up	1	F7TZ-7A089-AA

© Whatever It Takes Transmission Parts. Inc.

PART #	HARD PARTS (Continued)	QTY	REFERENCE #
36660	Inner Race, E4OD Overdrive Sprag (For Lug Type Sprag) 1989-Up	1	
36661	Outer Race, E4OD Overdrive Sprag (4.015"ID) 1989-94	1	
36661A	Outer Race, E4OD Overdrive Sprag (4.090"ID) 1995-Up	1	
36661D	Outer Race, 4R100 Overdrive Sprag (3.313"ID) 1998-Up	1	F81Z-7G389-AA
36663	Outer Race, E4OD/4R100 Intermediate Sprag (Lug Type) 1989-Up	1	
36664	Inner Race, C-6 Rear Sprag (1.089" Thick) 1966-69 (Can Use 36664A)	1	
36664A	Inner Race, C-6 Rear Sprag (1.089" Thick) 1970-E76 (Will Retro Fit 1966-E76)	1	
36664B	Inner Race, C-6 Rear Sprag (1.040" Thick) L1976-88	1	
36664E	Inner Race, C-6/E4OD Rear Sprag (1.013" Thick)(3.198"OD) 1989-97	1	E9TZ-7D171-AA
36664EK	Inner Race Kit, C-6/E4OD Rear Sprag (1.013" Thick)(3.198"OD)1989-97 (W/OE Type Bearing)	1	
36664EAK	Inner Race Kit, C-6/E4OD Rear Sprag (1.013" Thick)(3.198"OD)1989-97 (W/Heavy Duty Bearing)	1	
36664F	Inner Race, E4OD/4R100 Rear Sprag (3.398"OD) 1998-Up (Fits 17 Roller Sprag)	1	F7TZ-7D171-AA
36670	Input Shaft, C-6 (31 Spline Converter End)(31 Spline Drum End) 1966-E71	1	
36670A	Input Shaft, C-6 (31 Spline Converter End)(30 Spline Drum End) L1971-Up	1	
36670B	Input Shaft, E4OD (14 1/8" Long)	1	E9TZ-7017-A
36670C	Input Shaft, E4OD/4R100 (13 5/8" Long)	1	F81Z-7017-EA
36670CHP	Input Shaft, E4OD/4R100 (13 5/8" Long)(High Performance)(300M Billet Steel)	1	
36675	Shaft, E4OD Overdrive W/Pilot (For Bushing Type Output Shaft)	1	E9TZ-7A658-A
36675A	Shaft, E4OD Overdrive W/Pilot (For Bearing Type Output Shaft)	1	
36675B	Shaft, E4OD Overdrive (No Pilot)(For Cup Plug Type Output Shaft) 1994	1	
36675BA	Shaft, E4OD/4R100 Overdrive (No Pilot)(For Cup Plug Type Output Shaft) 1995-Up	1	F81Z-7A658-AA
36675BAHPK	Intermediate Shaft Assembly, 4R100 (Contains 300M Intermediate Shaft W/1.198"Dia, 4140 HTSR Billet Steel Forward Drum With Cast & Teflon Rings, 4140 HTSR Billet Steel Intermediate Center Shaft Support W/Dual Bushing Support System For Increased Stability Over The OE Bearing)	1	
36678	Output Shaft, C-6 2WD (17 3/8" Long) Bolt On Yoke Type	1	
36678A	Output Shaft, C-6 2WD (23" Long) W/6 Teeth Speed-o Gear	1	
36678AA	Output Shaft, C-6 2WD (23" Long) W/7 Teeth Speed-o Gear	1	
36678AB	Output Shaft, C-6 2WD (23" Long) W/8 Teeth Speed-o Gear	1	
36678AC	Output Shaft, C-6 2WD (23" Long) W/9 Teeth Speed-o Gear	1	
36678B	Output Shaft, C-6 2WD (26 3/4" Long) W/6 Teeth Speed-o Gear	1	
36678BA	Output Shaft, C-6 2WD (26 3/4" Long) W/7 Teeth Speed-o Gear	1	
36678BB	Output Shaft, C-6 2WD (26 3/4" Long) W/8 Teeth Speed-o Gear	1	
36678BC	Output Shaft, C-6 2WD (26 3/4" Long) W/9 Teeth Speed-o Gear	1	
36678C	Output Shaft, C-6 4x4 (15 3/8" Long)	1	
36678D	Output Shaft, C-6 4x4 (18 1/2" Long)	1	
36678E	Output Shaft, E4OD 4x4 (14 3/8" Long) W/Bushing	1	
36678EA	Output Shaft, E4OD 4x4 (14 3/8" Long) W/Bearing	1	
36678EB	Output Shaft, E4OD 4x4 (14 3/8" Long) W/Cup Plug	1	
36678ED	Output Shaft, 4R100 4x4 (14 3/8" Long) W/Cup Plug (Uses A Rotor)	1	
36678EDHP	Output Shaft, 4R100 4x4 1995-On (300M Billet Steel)(For High Torque Diesel And Off Road Applications)(Heat Treated And Precision Ground)	1	
36678G	Output Shaft, E4OD 4x4 (15 3/4" Long) W/Bushing	1	
36678GA	Output Shaft, E4OD 4x4 (15 3/4" Long) W/Bearing	1	
36678GB	Output Shaft, E4OD 4x4 (15 1/2" Long) W/Cup Plug 1994	1	
36678HA	Output Shaft, E4OD 4x4 (18 1/2" Long) W/Bearing	1	
36678HB	Output Shaft, E4OD 4x4 (18 1/2" Long) W/Cup Plug 1994-Up	1	
36678HC	Output Shaft, 4R100 4x4 (18 1/2" Long) W/Cup Plug (Uses A Rotor)	1	
36678J	Output Shaft, E4OD 2WD (20" Long) W/Bushing (No Speed-o Gear)	1	
36678JA	Output Shaft, E4OD 2WD (20" Long) W/Bearing (No Speed-o Gear)	1	
36678JB	Output Shaft, E4OD/4R100 2WD (20" Long) W/Cup Plug (No Speed-o Gear)	1	
36678JC	Output Shaft, E4OD 2WD (20" Long) W/Bushing (7 Teeth Speed-o Gear)	1	
36678JD	Output Shaft, E4OD 2WD (20" Long) W/Bearing (7 Teeth Speed-o Gear)	1	
36678JE	Output Shaft, E4OD 2WD (20" Long) W/Cup Plug (7 Teeth Speed-o Gear)	1	
36678JF	Output Shaft, 4R100 2WD (20" Long) W/Cup Plug (Uses A Rotor)	1	
36678JG	Output Shaft, E4OD 2WD (20" Long) W/Bushing (8 Teeth Speed-o Gear)	1	
36678JH	Output Shaft, E4OD 2WD (20" Long) W/Bearing (8 Teeth Speed-o Gear)	1	
36678JJ	Output Shaft, E4OD 2WD (20" Long) W/Cup Plug (8 Teeth Speed-o Gear)	1	
36678LA	Output Shaft, E4OD 2WD (23" Long) W/Bearing (No Speed-o Gear)	1	
36678LB	Output Shaft, E4OD 2WD (23" Long) W/Cup Plug (No Speed-o Gear)	1	
36680	Governor, C-6 (Cast # RF-C6) 1966-76	1	
36680A	Governor, C-6 (Cast # RF-D4) 1977-Up	1	
36680B	Governor, C-6 (Cast# RF-E4TP) 1980-Up	1	E4TZ-7C063-A
36680BA	Governor, C-6 Diesel (Cast # 85TZ7C063)	1	
36685	Support, C-6 Governor (With 3 Ring Grooves)	1	C7AZ-7D220-A
36690	Gear, C-6 Parking	1	
36690A	Gear, E4OD Parking (Washer Type) 1989-98	1	E9TZ-7A233-A

FORD

© Whatever It Takes Transmission Parts. Inc.

PART #	HARD PARTS (Continued)	QTY	REFERENCE #
36690B	Gear, 4R100 Parking (Bearing Type) 1999-Up	1	
36697	Oil Distribution Sleeve, C-6 (4 Bolts To Case)	1	C6AZ-7C232-A
36740	Valve Body, C-6 W/Detent 1966-69	1	
36740A	Valve Body, C-6 1970-E77	1	
36740B	Valve Body, C-6 (Gas) L1977-Up	1	
36740BD	Valve Body, C-6 (Diesel) L1977-Up (Use 36740B & T36165)	1	
36740C	Valve Body, E4OD (All) 1989	1	
36740D	Valve Body, E4OD (All) 1990-95	1	
36740DB	Valve Body, E4OD/4R100 (Non-PTO Models)(Cast # RF-F6) 1996-Up	1	
36740DC	Valve Body, 4R100 PTO Models (Cast # RF-F8) 1998-Up	1	

PART #	VALVE BODY COMPONENTS	QTY	REFERENCE #
76741-5	Check Ball, E4OD Valve Body (5/16")	AR	E7DZ-7E195-A
44741-5	Check Ball, E4OD Valve Body (1/4")	AR	E0AZ-7E195-B
A36741D-3	Spring, E4OD Reverse Modulator (Fixes 3 Transmissions) (Superior)	1	
S36741EK	Accumulator Kit, E4OD 3rd/4th Accumulator Control Valve (1 Valve, 1Retaining Clip and 4 Spring Shims) (If Bore Is Damaged Use T-36948-12 Also) (Sonnax)	1	
S36741E-ZK	Zip Kit, E4OD/4R100 (Sonnax)	1	
S36741EAK	Accumulator Kit, E4OD 2nd Accumulator Control Valve (1 Valve, 1 Retaining Clip & 4 Spring Shims) (If Bore Is Damaged Use T-36948-12 Also) (Sonnax)	1	
36741EBK	Accumulator Kit, E4OD/4R100 2nd/3rd/4th Accumulator Valves (Transgo)	1	
S36741ECK	Sure Cure Kit, E4OD (Sonnax)	1	
S36741EDK	Sure Cure Kit, 4R100 (Sonnax)	1	
S36741ELA-1	Valve, E4OD Solenoid Regulator 1989-95 (Sonnax)(3 Spool Valve Version) (Requires T-F-36948-TL22 & T-VB-FIX)	1	
T-F-36948-TL22	Tool For S36741ELA-1	1	
S36741ELB-1	Valve, E4OD/4R100 Solenoid Regulator 1996-Up (Sonnax)(2 Spool Valve Version) (Requires T-F-36947-TL14 & T-VB-FIX)	1	
T-F-36947-TL14	Tool For S36741ELB-1	1	
S36741GAK	Valve & Sleeve, E4OD Line Pressure (.372") (Sonnax)	1	36948-O5K
S36741GK	Valve & Sleeve, E4OD Line Pressure (.331") (Sonnax)	1	36948-03K
S86741HDK	Valve & Sleeve, E4OD/4R100 Line Pressure Modulator (.427"OD) 1995-97	1	
S36741ME-1K	Manual Valve, E4OD/4R100 With E-Clip (Oversized)(Sonnax) (Use With T-F-36947-TL13 And T-VB-Fix)	1	
T-F-36947-TL13	Reamer For S36741ME-1K	1	
T-VB-FIX	Valve Body Reaming Fixture (Sonnax)	1	
S36741P-3K	Spring Kit, C-6 (2WD Gas) Main Pressure Regulator (Elevated Pressure) (20 Springs Per Kit) (Sonnax)	1	
S36741PA-1	Valve, C-6 Pressure Regulator (Oversized) (Must Use Reamer # T-36946-TL) (Sonnax)	1	
S36741PE-3	Spring Kit, E4OD/4R100 Main Pressure Regulator (Elevated Pressure) (20 Springs Per Kit) (Sonnax)	1	
A36741RK	Valve Assembly, C-6 (Steel Boost Valve & Sleeve) (Superior)	1	
S36741RK	Valve & Sleeve Kit, C-6 Reverse Boost (O-Ring Style) (Gas) (Sonnax)	1	36949-01K
S36741RAK	Valve & Sleeve Kit, C-6 Reverse Boost (O-Ring Style) (Diesel) (Sonnax)	1	36946-02K
S36741RBK	Valve & Sleeve Kit, Reverse Boost (OE Style) (Diesel) (Sonnax)	1	36946-03K
S36741RCK	Valve & Sleeve Kit, Reverse Boost (OE Style) (Gas) (Sonnax)	1	36946-04K
A36741S-3K	Spring Set, 4R100 1-2 Shift Valve 1998-Up (Superior) (Contains: 3 Springs) (Fixes 3 Transmissions)	1	
A36741SAK	Valve Kit, E4OD/4R100 2-3 Shift Valve & Spring (For F6 Casting)(Transgo)(Fixes 3 Transmissions) (Contains: Three 2-3 Shift Valves & Three Springs) 6/1995-Up	1	
S36741TK	Boost Valve Kit, C-6 1966-76 (Contains: Valve, Sleeve & 3 O-Rings)(Fits Clicker Style Units) (Sonnax)	1	
S36741UAK	Valve & Sleeve Kit, E4OD/4R100 Low/Reverse Modulator (Heavy Duty)(Holding Valve, Orificed Valve, Spring & Sleeve) 1996-Up (Sonnax)	1	
S36741UK	Valve & Sleeve Kit, E4OD/4R100 Low/Reverse Modulator Valve (Plunger & Sleeve) 1996-Up (Sonnax)	1	
36742	Accumulator Assembly, E4OD 1989	1	
36742A	Accumulator Assembly, E4OD (Cast # RFE9) 1990-94	1	
36742AA	Accumulator Assembly, E4OD (Cast # RFF5) 1995	1	
36742B	Accumulator Assembly, E4OD/4R100 (Cast # RFF6 or RFF8) 1996-Up	1	
36747E	Seperator Plate, E4OD Valve Body (With 2 Half Moon & 1 U Notch) E1989	1	F4TZ-7A008-A
36747EA	Seperator Plate, E4OD Valve Body (With 1 Half Moon Notch)	1	
36747EB	Seperator Plate, E4OD Valve Body (With 1 Half Moon & 2 V Notches)	1	
36747EC	Seperator Plate, E4OD Valve Body (With 2 Half Moon Notches)	1	F5TZ-7A008-A
36747ED	Seperator Plate, E4OD Valve Body (With 1 V Notch)	1	F6TZ-7A008-B
36747EDB	Seperator Plate, E4OD Valve Body (With 3 V Notches)	1	
36747EF	Seperator Plate, E4OD Valve Body (With 1 Triangle Notch)	1	

FORD

© Whatever It Takes Transmission Parts. Inc.

36747EFB	Seperator Plate, E4OD Valve Body (With 3 Triangle Notches)	1	
36747EG	Seperator Plate, 4R100 Valve Body (With PTO) (Cast # F81Z-BA) 1998-Up	1	
36747EH	Seperator Plate, 4R100 Valve Body (Non PTO) (Cast # F81Z-DA) 1998-Up	1	

PART #	HARD PARTS (Continued)	QTY	REFERENCE #
36757E	Cover, E4OD/4R100 PTO (6 Bolt)	1	
36760A	Case, C-6 360/390 Round Bell (Screw-In Modulator) 1966-72	1	
36760AA	Case, C-6 360-390 Round Bell (Push-In Modulator) 1972-76	1	
36760B	Case, C-6 Big Block (Flat Top) (Screw-In Modulator) 1968-72	1	
36760BA	Case, C-6 Big Block (Flat Top) (Push-In Modulator) 1973-E76	1	
36760BB	Case, C-6 Big Block (Flat Top) (Push-In Modulator) L1976-E86 (Cast # RF-D7)	1	
36760BC	Case, C-6 Big Block (Flat Top) (Push-In Modulator) L1986-Up (Cast # RF-E7)	1	
36760BG	Case, C-6 Diesel (Cast # RF-E3) 1983-86	1	E8TZ-7005-G
36760BH	Case, C-6 Diesel (Cast # RF-E7) 1987-96	1	
36760C	Case, C-6 Small Block (Screw-In Modulator) 1968-72	1	
36760CA	Case, C-6 Small Block (Push-In Modulator) 1973-E76	1	
36760CB	Case, C-6 Small Block (Push-In Modulator) (Cast # RF-D7) L1976-E86	1	
36760CC	Case, C-6 Small Block (Push-In Modulator) (Cast # RF-E7) L1986-Up	1	
36760D	Case, E4OD Big Block (W/4 Bath Tub Slots) 1989	1	
36760DA	Case, E4OD Big Block (W/3 Bath Tub Slots) 1990-97	1	
36760E	Case, E4OD 5.0L/5.8L (W/4 Bath Tub Slots) 1989	1	
36760EA	Case, E4OD 5.0L/5.8L (W/3 Bath Tub Slots) 1990-95	1	
36760EB	Case, E4OD 5.4L/5.8L/6.8L (V10) (W/2 Bath Tub Slots)(3 Bolt Starter) 1996-97	1	
36760EC	Case, 4R100 5.4L/6.8L (V10) (W/2 Bath Tub Slots)(3 Bolt Starter) W/Turbine Speed Sensor (No PTO) 1998-Up	1	
36760ED	Case, 4R100 5.4L/6.8L (V10) (W/2 Bath Tub Slots)(3 Bolt Starter) W/Turbine Speed Sensor (With PTO) 1998-Up	1	
36760G	Case, E4OD Diesel (W/4 Bath Tub Slots) 1989	1	
36760GA	Case, E4OD Diesel (W/3 Bath Tub Slots) 1990-95	1	
36760GB	Case, E4OD Diesel (W/3 Bath Tub Slots) 1996-97	1	
36760GBA	Case, E4OD Diesel (W/3 Bath Tube Slots) (Cast # RFF7-AA) 1996-97	1	
36760GC	Case, 4R100 7.3L Diesel (W/Out PTO) 1998-Up (W/3 Bath Tub Slots)(W/Turbine Shaft Speed Sensor)	1	
36760GCC	Case, 4R100 7.3L (Diesel)(W/Out PTO) 1998-Up (W/3 Bath Tub SLots)(W/Turbine Shaft Speed Sensor)(This Is An Early Case Converted To A Late)	1	
36760GG	Case, 4R100 7.3L Diesel (W/PTO) 1998-Up (W/3 Bath Tub Slots)(W/Turbine Shaft Speed Sensor)	1	

PART #	CASE COMPONENTS	QTY	REFERENCE #
36761A-1	Drain Back Valve, E4OD (Goes in 5/16” Cooler Line)	1	F0TZ-7D174-A
S36761C-2K	Seal Kit, E4OD/4R100 Intermediate & Direct Clutch Feed (Sonnax)(Contains: 2 Rubber Seals, 2 Seal Tubes & 2 Springs)	1	
36761EP-4	Roll Pin, E4OD/4R100 Holds Shift Lver Pin In Case 1989-Up (.113”OD) 1.006” Long	1	
S36996G-5K	Cooler By-Pass Check Ball Assembly, E4OD/4R100 (Contains: Check Ball, T-Valve, Spring, And 7 O-Rings) (Sonnax)	1	
36783	Bolt, E4OD Center Support To Case	2	E9TZ-7Z059-B
36783-S	Shim, E4OD/4R100 Center Support Bolt To Case (Aluminum)	1	
S36783-SK	Shim KIt, E4OD/4R100 Center Support Bolt To Case (Aluminum)(10 Pieces)(Sonnax)	1	
36784	Bolt, E4OD Intermediate Clutch Cylinder	1	E9TZ-7Z059-A
36916-2	Band Strut, C-6 Intermediate (Flat)	1	C6AZ-7D029-C
36991-1	Kickdown Lever, C-6 (Internal) L1976-UP	1	D0AZ-7D261-B
T-TK56RTD	Tool Kit, AOD/AODE/4R70W Shift Linkage Pin Remover & Installer (Teckpak)	1	

PART #	HARD PARTS (Continued)	QTY	REFERENCE #
36765	Pan, C-6 2WD Shallow 1966-74	1	E9TZ-7A194-A
36765A	Pan, C-6 2WD (1 7/8” Deep) 1975-Up	1	F5TZ-7A194-D
36765B	Pan, C-6 4x4	1	E5TZ-7A194-C
36765C	Pan, E4OD 2WD	1	
36765D	Pan, E4OD 4x4	1	
36765DA	Pan, 4R100 2WD (For Reusable Gasket) 1998-Up	1	
36765E	Pan, 4R100 4x4 (For Reusable Gasket) W/Drain Plug 1998-Up	1	
36765EA	Pan, 4R100 4x4 (For Reusable Gasket) No Drain Plug 1998-Up	1	
36770	Extension Housing, C-6 2WD (Aluminum) (All Except Lincoln)	1	
36770A	Extension Housing, C-6 2WD (Aluminum) (Lincoln Only)	1	
36770AA	Extension Housing, C-6 2WD (Bolt On Type Yoke)	1	
36770B	Extension Housing, C-6 4x4 (Aluminum)	1	
36770BA	Extension Housing, C-6 4x4 (8 3/4”)(Cast Iron)	1	
36770BB	Extension Housing, C-6 4x4 (5 3/4”)(Cast Iron)	1	

© Whatever It Takes Transmission Parts. Inc.

PART #	HARD PARTS (Continued)	QTY	REFERENCE #
36770C	Extension Housing, E4OD 2WD 1989-97	1	
36770D	Extension Housing, E4OD 2WD (For Brake Drum)(Aluminum)(4 5/8")(Cast # F7TP-7A040-AA)	1	
36770DA	Extension Housing, 4R100 2WD (10 1/2")(3.180"OD Seal) No Sensor	1	
36770DB	Extension Housing, 4R100 2WD (10 1/2")(3.180"OD Seal) W/Sensor	1	
36770DC	Extension Housing, 4R100 2WD (10 1/2")(2 1/2"OD Seal) No Sensor & No Speed-O) 1998-Up	1	
36770DD	Extension Housing, 4R100 2WD (10 1/2")(2 1/2"OD Seal) w/Sensor Hole On Top 1998-Up	1	
36770DE	Extension Housing, 4R100 2WD (10 1/2")(2 1/2"OD Seal) No Sensor Hole w/Speed-O Hole 1998-Up	1	
36770E	Extension Housing, E4OD 4x4 (Aluminum) 1989-97	1	
36770EB	Extension Housing, E4OD/4R100 4x4 (Aluminum) W/Speed Sensor 1998-Up (Cast # RF-F81P)	1	
36770EC	Extension Housing, E4OD/4R100 4x4 (Cast Iron) W/Speed Sensor 1998-Up	1	
36770ED	Extension Housing, E4OD/4R100 4x4 (Aluminum) W/Out Speed Sensor 1998-Up	1	
36770EF	Extension Housing, 4R100 (Brake Drum Type)(Aluminum)(W/Speed Sensor) 1988-Up (Cast # RF-F8)(No Oil Dam Cutout)		
86774C	Speed-O Housing, E4OD With Sensor (2 Pin Connector) (Uses A Cable)	1	E9TZ-9E731-A
36774D	Speed-O Housing, E4OD With Sensor (2 Pin Connector) (2.21 OHMS) 1997-Up (Does Not Use A Cable)	1	F65Z-9E731-AB
26775	Converter Nut, C-6 Flange Type	4	
26775A	Converter Nut, C-6 Self Locking	4	
26775C	Converter Plug, C-6 (Allen Head)	4	
26775D	Converter Plug, C-6 (7/16" Hex Head)	4	
36777K	Bolt Set, C-6 Pump To Case	1	
36777AK	Bolt Set, E4OD/4R100 Pump To Case (9 Bolts)	1	
36778K	Bolt Set, C-6 Pump Body To Stator (5 Pieces)	1	
36778AK	Bolt Set, E4OD Pump Body To Stator (11 Pieces)	1	
36778BK	Bolt Set, 4R100 Pump Body To Stator (12 Pieces)	1	
36779K	Bolt Set, C-6 Pan To Case	1	
S36779	Pan Bolt, C-6 (Sonnax)	AR	
S36779A	Pan Bolt, E4OD/4R100 (Metric) (Sonnax)	AR	
36779AK	Bolt Set, E4OD Pan To Case	1	
36781K	Bolt Set, C-6 Extension Housing To Case	1	
36781AK	Bolt Set, E4OD Extension Housing To Case (2WD)	1	
36781AAK	Bolt Set, E4OD Extension Housing To Case (4x4)	1	
36783	Bolt, E4OD Center Support To Case	3	E9TZ-7Z059-B
36783-S	Shim, E4OD/4R100 Center Support Bolt To Case (Aluminum)	3	
36783-SK	Shim Kit, E4OD/4R100 Center Support Bolt To Case (Aluminum)(10 Pieces)(Sonnax)	1	
36783B	Bolt Set, E4OD Holds Aluminum Center Support To Steel Direct Drum Support (3 Per Set)	1	
36784	Bolt, E4OD/4R100 Intermediate Clutch Cylinder (1.235" Long) (12mm)	1	E9TZ-7Z059-A
36790K	Bolt Set, C-6 Rear Support To Case	1	
36790AK	Bolt Set, E4OD Rear Support To Case	1	
44839	Pan Magnet, Retangular	1	
44839A	Pan Magnet, Round	1	3787240
36843	Bracket, C-6 Modulator	1	
36848E	Rotor, 4R100 (18 Teeth)	1	
36853	Cushion, C-6/E4OD Forward Clutch	1	D6AZ-7E085-B
36854	Cushion, C-6 Reverse Clutch (.062") L1976-Up	1	
36854A	Cushion, C-6 Reverse Clutch (.085") 1992-Up	1	
36854EC	Cushion, E4OD Reverse Clutch (.080") 1996-Up	1	F6TZ-7D085-A
36860	Snap Ring, E4OD Holds Overdrive Pressure Plate In Case (.050")	1	
36860A	Snap Ring, E4OD Holds Overdrive Pressure Plate In Case (.079") Also Holds Intermediate Overdrive Cylinder In Case	1-2	
36860B	Snap Ring, E4OD Holds Overdrive Pressure Plate In Case (.099")	1	
36860C	Snap Ring, E4OD Holds Overdrive Pressure Plate In Case (.119")	1	
36860D	Snap Ring, E4OD Holds Overdrive Pressure Plate In Case (.139")	1	386842
36862	Snap Ring, E4OD Holds Overdrive Return Spring In Drum (Update)(With More Tension)	1	F0TZ-7A527-A
36863	Snap Ring, E4OD Holds Overdrive Sprag In Ring Gear 1989-97	1	
36863A	Snap Ring, 4R100 Holds Overdrive Sprag In Ring Gear 1998-Up	1	
36864	Snap Ring, E4OD Holds Overdrive Sprag To Drum	1	
36866	Snap Ring, E4OD Overdrive Sun Gear Stop	1	
36868	Snap Ring, E4OD Holds Center Shaft In Overdrive Ring Gear 1989-97	1	
36868A	Snap Ring, E4OD/4R100 Holds Center Shaft In Overdrive Ring Gear 1998-Up	1	F5TZ-7G375-AA
36871	Snap Ring, E4OD Holds Coast Clutch Beveled Spring In Drum (3 1/16"OD) (.076" Thick) 1989-97	1	E9TZ-7A527-B
36871A	Snap Ring, E4OD/4R100 Holds Coast Clutch Beveled Spring In (3 1/4"OD) (.060" Thick) 1998-Up	1	F81Z-7A527-AA
36878	Snap Ring, C-6/E4OD/4R100 Forward & Direct Pressure Plate (058") Also E4OD/4R100 Coast Clutch Pressure Plate & C-6/E4OD/4R100 Forward Beveled Spring	1-4	E9TZ-7D483-A

FORD

© Whatever It Takes Transmission Parts. Inc.

36878A	Snap Ring, C-6/E4OD/4R100 Forward & Direct Pressure Plate (067") Also E4OD/4R100 Coast Clutch Pressure Plate & C-6/E4OD/4R100 Forward Beveled Spring	1-4	E9TZ-7D483-B
36878B	Snap Ring, C-6/E4OD/4R100 Forward & Direct Pressure Plate (076") Also E4OD/4R100 Coast Clutch Pressure Plate & C-6/E4OD/4R100 Forward Beveled Spring	1-4	E9TZ-7D483-C
36878C	Snap Ring, C-6/E4OD/4R100 Forward & Direct Pressure Plate (085") Also E4OD/4R100 Coast Clutch Pressure Plate & C-6/E4OD/4R100 Forward Beveled Spring	1-4	
36878D	Snap Ring, C-6/E4OD/4R100 Forward & Direct Pressure Plate (094") Also E4OD/4R100 Coast Clutch Pressure Plate & C-6/E4OD/4R100 Forward Beveled Spring	1-4	
36878F	Snap Ring, C-6/E4OD/4R100 Forward & Direct Pressure Plate (.112") Also E4OD/4R100 Coast Clutch Pressure Plate & C-6/E4OD/4R100 Forward Beveled Spring	1-4	
36879	Snap Ring, C-6/E4OD/4R100 Holds Retainer To Direct Drum	1	E9TZ-7C122-A
36881	Snap Ring, C-6/E4OD/4R100 Holds Forward Clutch Hub In Forward Ring Gear	1	377132-S
36881A	Snap Ring, C-6/E4OD/4R100 Holds Forward Clutch Hub In Ring Gear (Superior Super Tuff)	1	
36884	Snap Ring, C-6/E4OD/4R100 Holds Sun Gear To Shell	1	377300-S
36888	Snap Ring, C-6/E4OD Holds Rear Planet In Reverse Hub 1966-97	1	W706715
36888A	Snap Ring, C-6/E4OD Holds Rear Planet In Reverse Hub 1998-Up	1	
36889A	Snap Ring, C-6/E4OD Holds Rear Hub To Rear Ring Gear	1	377132
36890	Snap Ring, C-6/E4OD/4R100 Holds Sprag In Reverse Hub	2	377135-S2
36892	Snap Ring, C-6/E4OD/4R100 Holds Reverse Clutch Pressure Plate In Case (.075" Thick)	1	E9TZ-7D483-J
36893	Snap Ring, C-6 Holds Reverse Clutch Spring Retainer In Case 1966-88	1	
36894A	Snap Ring, C-6 Output Shaft (Front) (.055" Thick) 1966-76	1	377138
36894B	Snap Ring, C-6/E4OD Output Shaft (Front) (.075" Thick) 1976-Up	1	387031-S5
36895	Snap Ring, C-6/E4OD Output Shaft (Rear)	1	387035-S5
36896	Snap Ring, E4OD Holds Intermediate Servo In Case	1	
36905B	Servo Assembly, C-6 Super Servo	1	
36905E	Servo Assembly, E4OD (1st Design) (Uses Cover # 909)	1	
36905EA	Servo Assembly, E4OD (2nd Design)(Updated)(Uses No Cover)	1	
36906	Spring, C-6 Intermediate Servo	1	C8SZ-7D028-B
36906E	Spring, E4OD Intermediate Servo (1st Design)	1	
36907	Piston, C-6 Intermediate Servo (No Dimples)(Fits L Cover)	1	D5TZ-7D021-A
36907A	Piston, C-6 Intermediate Servo (1 Dimple)(Fits N Cover)	1	D5UZ-7D021-A
36907B	Piston, C-6 Intermediate Servo (2 Dimples)(Fits P Cover)	1	D5TZ-7D021-B
36907C	Piston, C-6 Intermediate Servo (3 Dimples)(Fits S Cover)	1	D7AZ-7D021-A
36907D	Piston, C-6 Intermediate Servo (Early) Aluminum (Fits D Cover)	1	
36907DK	Servo Kit, C-6 Intermediate Servo (R-Code)	1	
36907E	Piston, E4OD Servo (1st Design) (Uses A Cover # 909)	1	F6TZ-7D021-A
36909	Cover, C-6 Intermediate Servo (W/Cast Letter L)	1	
36909A	Cover, C-6 Intermediate Servo (W/Cast Letter N)	1	
36909B	Cover, C-6 Intermediate Servo (W/Cast Letter S)	1	
36909C	Cover, C-6 Intermediate Servo (W/Cast Letter P)	1	
36909D	Cover, C-6 Intermediate Servo (W/Cast Letter D)	1	
36909DG	Cover, C-6 Intermediate Servo (W/Cast Letter G)	1	
36916-1	Servo Lever, C-6 Intermediate Band	1	
S36916-1	Servo Lever, C-6 Intermediate Hi-Performance (R-Code) (Sonax) (OEM "E" Ratio 1.85)	1	
36916A-1	Servo Lever, C-6 Stock Lever	1	
S36916-1FF	Servo Lever, C-6 Intermediate Hi-Performance (Not For "H" or "R" Codes) (Sonnax) (Non Stock Ratio 2.82)	1	
36916-2	Band Strut, C-6 Intermediate (Flat)	1	
36916-3	Band Anchor Strut, C-6 Intermediate (Wedge Shaped)	1	
36919	Adjusting Bolt, C-6 Intermediate Band	1	
36922	Nut, C-6 Band Adjusting Nut	1	375185-S100
36926K	Spring Kit, C-6 Accumulator (Inner & Outer)	1	
A36926CK	Spring Kit, E4OD/4R100 Accumulator (Outer)(3 Per Pack) (Superior)	1	
A36927CK	Accumulator Kit, E4OD/4R100 (3 Steel Pistons & 3 Springs) (Superior)	1	
T-36948-12	Bore Sizing Tool, E4OD Accumulator (2nd/3rd/4th Accumulator Valve) Use With S36741EK To Repair Worn Bore	1	
36960	Piston, E4OD Overdrive Clutch 1989-95	1	E9TZ-7A262-A
36960A	Piston, E4OD Overdrive Clutch (Bonded Rubber) 1996-Up	1	F6TZ-7A262-AA
36962	Piston, E4OD/4R100 Intermediate Clutch (Aluminum)	1	E9TZ-7E005-A
36964	Piston, C-6/E4OD Forward Clutch 1976-Up	1	D6AZ-7A262-A
36965	Piston, C-6 Direct Clutch Piston	1	D8AZ-7D402-A
36965E	Piston, E4OD/4R100 Direct Clutch (Cast # E9TP-7A262-CA) (Used With A Washer Type Direct Drum) 1989-98	1	E9TZ-7A262-C
36965EA	Piston, E4OD/4R100 Direct Clutch (Cast # YC3P-7A262-AA) (Used With A Bearing Type Direct Drum) 1998-Up	1	
36966	Piston, C-6 Reverse Clutch 1966-E76	1	C6AZ-7D402-A
36966A	Piston, C-6 Reverse Clutch L1976-E86	1	
36966B	Piston, C-6 Reverse Clutch L1986-Up	1	D8AZ-7D402-A
36966C	Piston, E4OD Reverse Clutch 1989-98	1	E9TZ-7D402-A
36966CA	Piston, 4R100 Reverse Clutch 1998-Up	1	F6TZ-7D402-A

© Whatever It Takes Transmission Parts. Inc.

PART #	HARD PARTS (Continued)	QTY	REFERENCE #
36969	Piston, E4OD Coast Clutch (Inner) Aluminum (For Cast Iron Drum)	1	
36969A	Piston Ring, E4OD Coast Clutch (Outer) Steel (For Cast Iron Drum)	1	
36969B	Piston, 4R100 Coast Clutch (Molded Rubber) (For Stamped Steel Drum)	1	F81Z-7A262-AA
36970	Diaphram Spring, E4OD/4R100 Overdrive Clutch 1989-Up	1	E9TZ-7B070-A
36972	Diaphram Spring, E4OD/4R100 Intermediate Clutch 1989-Up	1	E9TZ-7B070-B
36974A	Spring, C-6 Forward Clutch Disc Spring (.076") 1966-E76	1	D9AZ-7B070-A
36974B	Spring, C-6/E4OD Forward Clutch Disc Spring (.094") L1976-Up	1	D9AZ-7B070-A
36975	Spring, C-6 Direct Clutch Return 1966-E76	10	C7ZZ-7B488-A
36975A	Springs W/Retainer, C-6 Direct Clutch Return L1976-91	1	
36975B	Springs W/Retainer, E4OD/4R100 Direct Clutch Return 1989-Up	1	E9TZ-7F235-A
36975K	Spring Set, C-6 Direct Clutch Return (18 Pieces) 1966-E76	1	
36976	Springs, C-6 Reverse Clutch Return 1966-E76	10	
36976A	Springs W/Retainer, C-6 Reverse Clutch Return L1976-E86	1	D6AZ-7D406-A
36976B	Springs W/Retainer, C-6/E4OD Reverse Clutch Return (3.00"ID)(4.925"OD) L1986-Up	1	E6TZ-7D406-A
36976C	Springs W/Retainer, 4R100 Reverse Clutch Return (3.00"ID)(5.190"OD) 1998-Up	1	F6TZ-7D406-A
36979	Diaphram Spring, E4OD Coast Clutch	1	E9TZ-7B070-C
36979A	Springs W/Retainer, 4R100 Coast Clutch	1	F81Z-7B070-AA
36985	Retainer, C-6 Direct Clutch Spring 1966-E76	1	
36986	Retainer, C-6 Reverse Clutch Spring 1966-E76	1	
36991	Linkage Assembly, C-6 W/Park Rod (Internal) 1966-69	1	
36991-2	Detent Roller Arm, E4OD	1	E9TZ-7E332-A
36991A	Linkage Assembly, C-6 W/Park Rod (Internal) 1970-UP	1	
36991A-2	Detent Spring & Roller, C-6	1	
36991B	Linkage Assembly, E4OD (Internal W/Park Rod) 1989-98	1	
36991EB-4	Manual Shaft, 4R100 (5.395" Long)(Threaded On Both Ends) 1998-Up	1	
T-TK56RTD	Tool Kit, 4R100 Shift Linkage Pin Remover & Installer (Teckpak)	1	
36992	Lever W/Shaft, C-6 Shift (External) Car (Floor Shift) 1966-69 (No Gormmet Type)	1	
36992A	Lever W/Shaft, C-6 Shift (External) Car (Column Shift) 1966-69 (No Grommet Type)	1	
36992AA	Lever W/Shaft, C-6 Shift (External) Truck (Column Shift) 1966-69 (No Grommet Type)	1	
36992AB	Lever W/Shaft, C-6 Shift (External) Car (Floor Shift) 1970-E76 (Uses 3/8" Grommet)	1	
36992AC	Lever W/Shaft, C-6 Shift (External) Car (Column Shift) 1970-E76 (Uses 3/8" Grommet) (Cast # D5UP-AA)	1	
36992ACA	Lever W/Shaft, C-6 Shift (External) Car (Column Shift) 1970-E76 (Uses 3/8" Grommet) (Cast # D8TP-AA)	1	
36992AD	Lever W/Shaft, C-6 Shift (External) Truck (Column Shift) 1970-E76 (Uses 3/8" Grommet) (Cast # D3TP-CA)	1	
36992AE	Lever W/Shaft, C-6 Shift (External) Car (Floor Shift) L1976-Up (Uses 1/2" Grommet) (Cast # D5TP-AA)	1	
36992AG	Lever W/Shaft, C-6 Shift (External) Car (Column Shift) L1976-Up (Uses 1/2" Grommet) (Cast # D2AP-AA)	1	
36992AGA	Lever W/Shaft, C-6 Shift (External) Car (Column Shift) L1976-Up (Uses 1/2" Grommet) (Cast # E0TP-CA)	1	
36992AH	Lever W/Shaft, C-6 Shift (External) Truck (Column Shift) L1976-Up (Uses 1/2" Grommet)	1	
36992B	Lever W/Shaft, E4OD Shift (External) Truck 1989-91	1	E9TZ-7A256-A
36992BA	Lever W/Shaft, E4OD Shift (External) Truck 1992-98	1	F2UZ-7A256-B
36992BB	Lever W/Shaft, E4OD Shift (External) Truck 1996-97 (Cast # F75P)	1	
36992C	Lever W/Out Shaft, 4R100 Shift (External) Truck (F2UP-BA) 1998-Up	1	
36994E	Park Rod Actuator, E4OD/4R100 (10 3/8" Long)	1	
36995	Park Pawl Assembly, C-6	1	
36995E	Park Pawl Assembly, E4OD/4R100 1989-Up	1	
36995E-3	Spring, E4OD/4R100 Park Pawl Return	1	
T86996	Cooler Line Fitting, E4OD Double O-Ring (Teckpak) 1991-Up	1	
26996A	Fitting, C-6 Cooler Line (Straight) (5/16" Line x 1/8" Pipe Thread) Screw In Flared	1	
36996G	Cooler By-Pass Valve Assembly, E4OD/4R100 1997-Up (Retro Fit) The Front Cooler Line Fitting Attaches From The Bottom Of This Assembly	1	2C3Z-7H322-AA
36996G-5K	Cooler By-Pass Check Ball Assembly, E4OD/4R100 (Contains: Check Ball, T-Valve, Spring, And 7 O-Rings) (Sonnax)	1	
36996GA	Cooler By-Pass Valve Assembly, 4R100 1998-Up (The Front Cooler Line Fitting Sticks Straight Out To The Passengers Side Of This Assembly)	1	2C3Z-7H322-BA
36999A	Tube, C-6 Governor (Long)	1	C6AZ-7D000-B
36999B	Tube, C-6 Governor (Short)	1	C6AZ-7D000-A

© Whatever It Takes Transmission Parts. Inc.

© Whatever It Takes Transmission Parts. Inc.

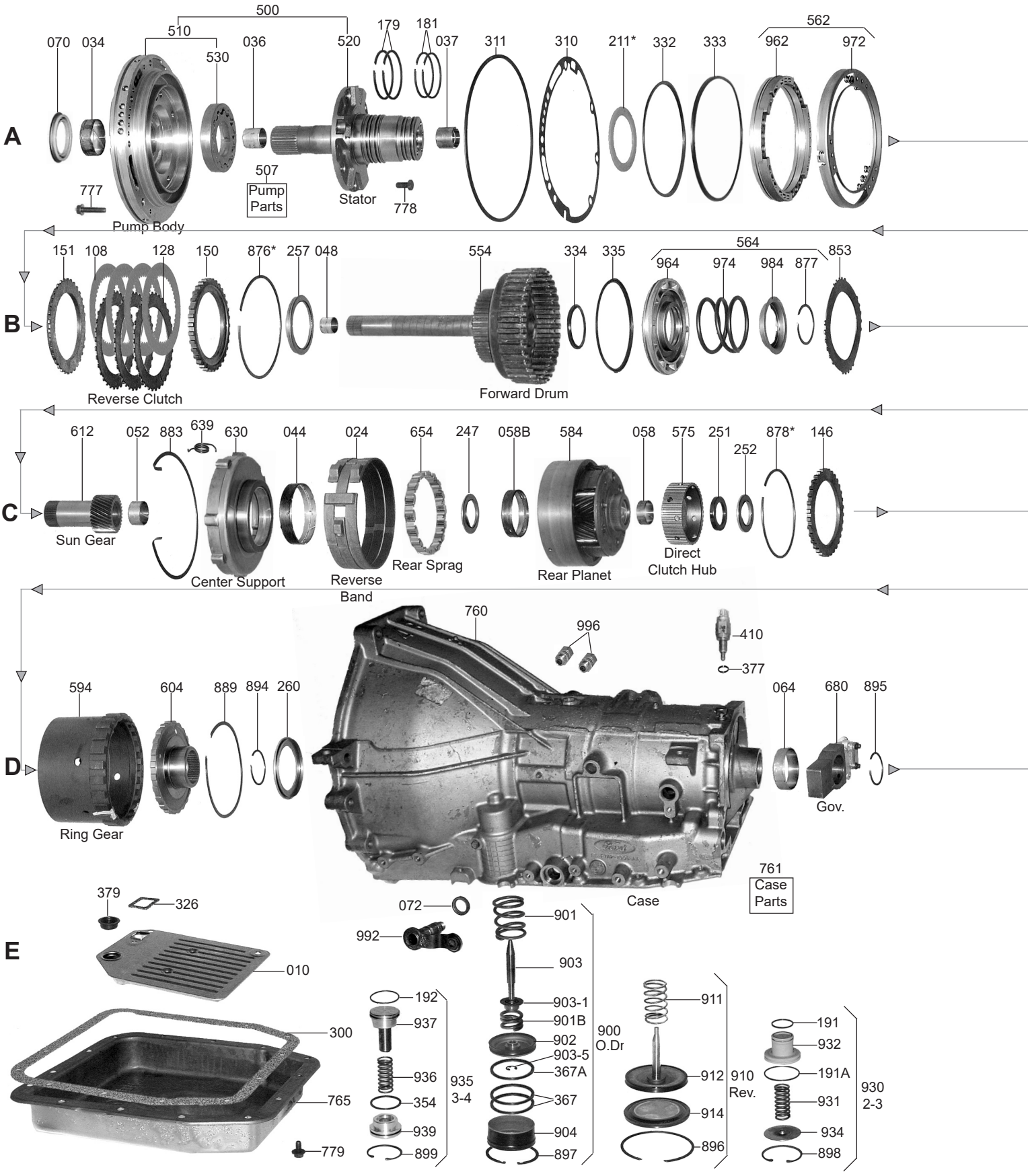
A
500
510
530
070
034
036
520
179
181
037
311
310
211*
332
333
562
962
972
777
Pump Body
507
Pump
Parts
Stator
778
B
151
108
128
150
876*
257
048
554
334
335
564
964
974
984
877
853
Reverse Clutch
Forward Drum
C
612
052
883
639
630
044
024
654
247
058B
584
058
575
251
252
878*
146
Sun Gear
Center Support
Reverse
Band
Rear Sprag
Rear Planet
Direct
Clutch Hub
D
760
996
410
377
594
604
889
894
260
064
680
895
Ring Gear
Gov.
761
Case
Parts
Case
E
379
326
072
992
901
903
903-1
901B
902
903-5
367A
367
904
897
900
O.Dr
911
912
914
896
910
Rev.
191
932
191A
931
934
898
930
2-3
010
300
765
779
192
937
936
354
939
899
935
3-4

FORD

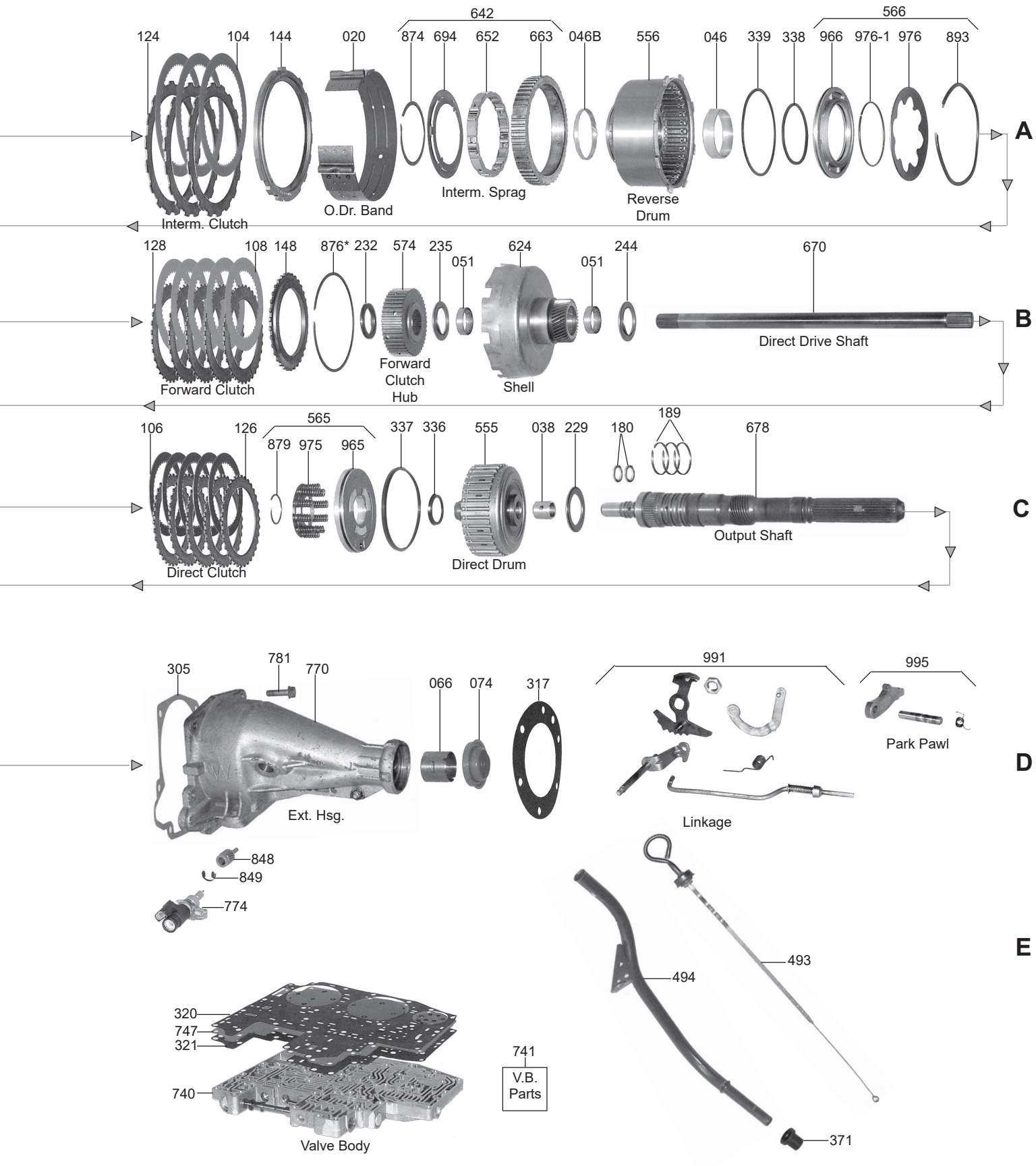

FORD

© Whatever It Takes Transmission Parts. Inc.

AODE / 4R70W / 4R75W / 4R70E / 4R75E RWD 4 Speed

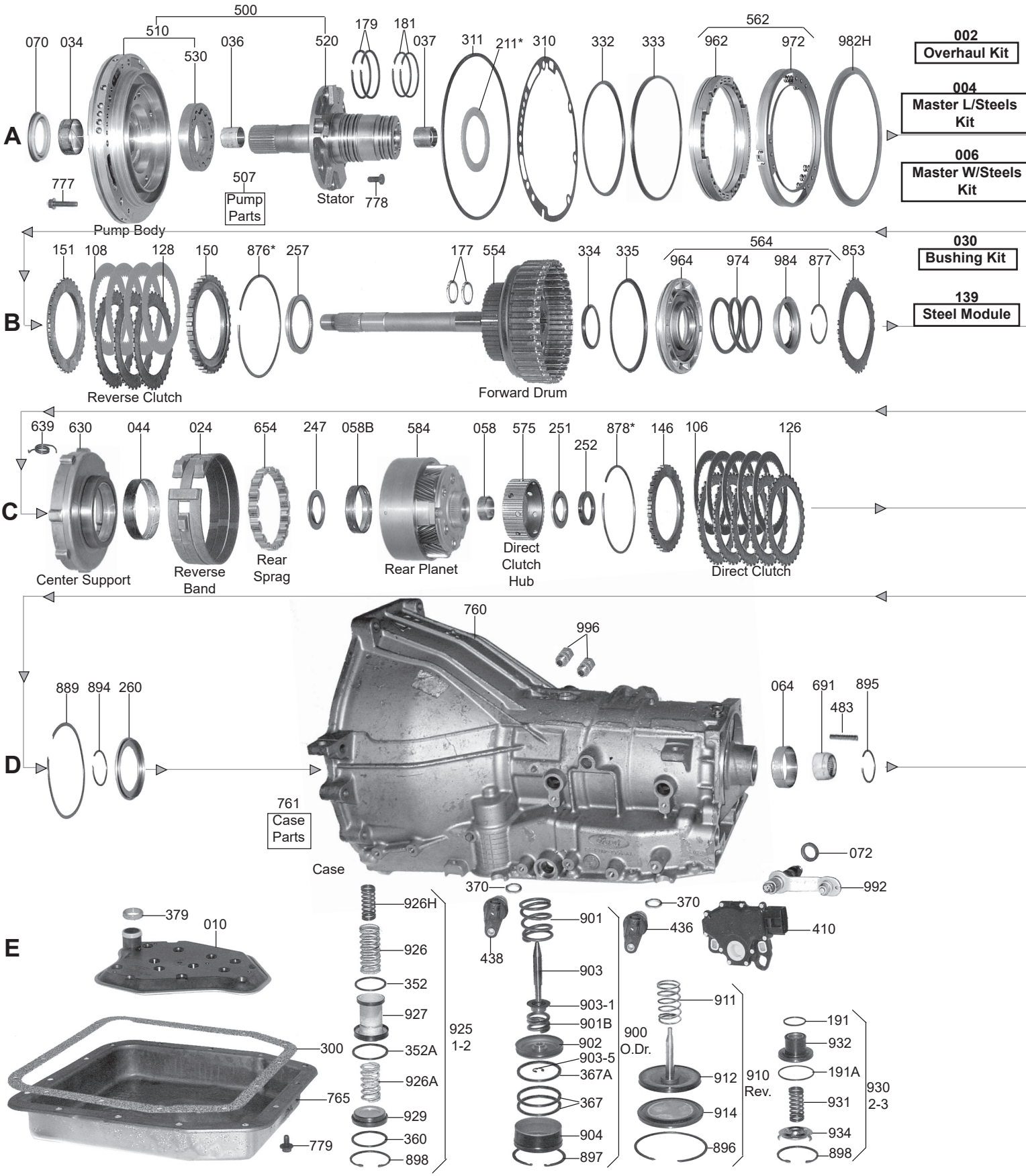

FORD

© Whatever It Takes Transmission Parts. Inc.

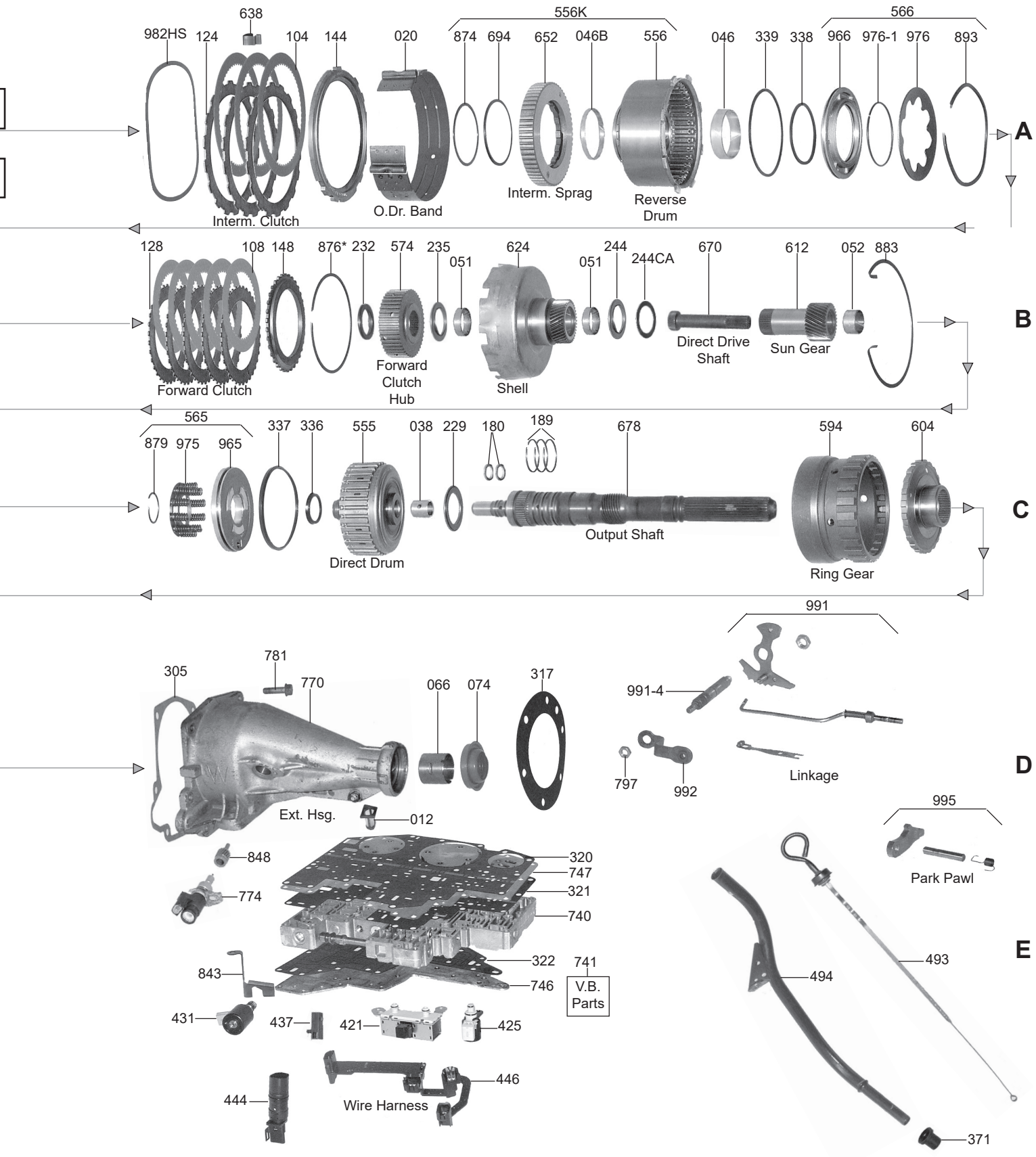

FORD

1-800-940-0197

© Whatever It Takes Transmission Parts. Inc.

PART #	PAPER & RUBBER KIT	QTY.	REFERENCE #
76000	Paper & Rubber Kit, AOD (FIOD) 1980-93	1	
76000E	Paper & Rubber Kit, AODE/4R70W 1992-95	1	
76000GF	Paper & Rubber Kit, 4R70W/4R75W/4R70E/4R75E 1996-Up (Farpak)	1	

PART #	OVERHAUL KITS	QTY.	REFERENCE #
76002	Overhaul Kit, AOD 1980-93	1	
76002E	Overhaul Kit, AODE/4R70W 1992-95 (If Customer Needs Bonded Pan Gasket, Sell 76300EW)	1	
76002GF	Overhaul Kit, 4R70W 1996-03 (Farpak)	1	
76002GW	Overhaul Kit, 4R70W 1996-03 (Bonded Pan Gasket)	1	
76002GZ	Overhaul Kit, 4R70W 1996-03 (Ultra Cork Pan Gasket)	1	
76002HF	Overhaul Kit, 4R75W/4R70E/4R75E (Farpak) 2004-14	1	
76002HFHP	Overhaul Kit, 4R75W/4R70E/4R75E(Farpak) 2004-14	1	
76002HW	Overhaul Kit, 4R75W/4R70E/4R75E (Bonded Pan Gasket) 2004-14	1	

PART #	MASTER L/STEEL KIT	QTY.	REFERENCE #
76004	Master L/Steels Kit, AOD (FIOD) 1980-E83	1	
76004A	Master L/Steels Kit, AOD (FIOD) L1983-93	1	
76004E	Master L/Steels Kit, AODE 1992-95	1	
76004EA	Master L/Steels Kit, 4R70W 1993-95 (If Customer Needs Bonded Pan Gasket, Sell 76300EW)	1	
76004GF	Master L/Steels Kit, 4R70W 1996-03 (Farpak Pan Gasket)	1	
76004GW	Master L/Steels Kit, 4R70W 1996-03 (Bonded Pan Gasket)	1	
76004GZ	Master L/Steels Kit, 4R70W 1996-03 (Ultra Cork Pan Gasket)	1	
76004HF	Master L/Steels Kit, 4R75W/4R70E/4R75E (Farpak Pan Gasket) 2004-Up	1	
76004HW	Master L/Steels Kit, 4R75W/4R70E/4R75E (Bonded Pan Gasket) 2004-Up	1	

PART #	MASTER W/STEEL KIT	QTY.	REFERENCE #
76006	Master W/Steels Kit, AOD (FIOD) 1980-E83	1	
76006A	Master W/Steels Kit, AOD L1983-93 (W/Cast Iron Reverse, Direct & Forward Drums)	1	
76006B	Master W/Steels Kit, AOD L1983-93 (W/Stamped Steel Reverse, Direct & Forward Drums)	1	
76006E	Master W/Steels Kit, AODE 1992-95	1	
76006EA	Master W/Steels Kit, 4R70W 1993-95 (If Customer Needs A Bonded Pan Gasket, Sell 76300EW)	1	
76006GF	Master W/Steels Kit, 4R70W 1996-03 (Farpak)	1	
76006GW	Master W/Steels Kit, 4R70W 1996-03 (Bonded Pan Gasket)	1	
76006GZ	Master W/Steels Kit, 4R70W 1996-03 (Ultra Cork Pan Gasket)	1	
76006HF	Master W/Steels Kit, 4R75W/4R70E/4R75E (Farpak Pan Gasket) 2004-Up	1	
76006HW	Master W/Steels Kit, 4R75W/4R70E/4R75E (Bonded Pan Gasket) 2004-Up	1	

PART #	FILTER	QTY.	REFERENCE #
76010	Filter, AOD 2WD 1980-93	1	E0AZ-7A098-A
76010A	Filter, AOD 4x4 1984-93	1	E4TP-7F003-A
76010E	Filter, AODE 2WD 1992-95	1	F2VY-7A098-AA
76010EA	Filter, AODE/4R70W 4WD 1994-95 (4R70W/4R75W/4R70E/4R75E 2WD & 4x4 1996-Up) (Has A Metal Pick-Up Tube)	1	F6AZ-7A098-AA

PART #	FILTER KIT	QTY.	REFERENCE #
76011	Filter Kit, AOD 2WD 1980-93	1	
76011A	Filter Kit, AOD 4x4 1984-93	1	
76011E	Filter Kit, AODE 2WD 1992-95	1	
76011EA	Filter Kit, AODE/4R70W 4x4 1994-95 (4R70W/4R75W/4R70E/4R75E 2WD & 4x4 1996-Up)	1	

PART #	MISC. FILTERS	QTY.	REFERENCE #
76012H	Screen, 4R70W/4R75W/4R70E/4R75E Pump (On Valve Body) 2004-Up	1	
76014	Screen, AOD Governor	1	E7AZ-E242-A
76016	Screen, AODE/4R70W/4R75W/4R70E/4R75E Solenoid Feed (In Valve Body) 1992-Up	1	F2VY-7H187-A

PART #	BANDS	QTY.	REFERENCE #
76020	Band, AOD Overdrive Drum (1.5” Wide) 1980-93	1	E0AZ-7F196-A
76020K	Band, AOD Overdrive Drum (1.5” Wide) 1980-93 (Kevlar)	1	
76020E	Band, AOD/AODE/4R70W/4R75W/4R70E/4R75E Overdrive Drum (2” Wide) 1990-Up	1	F2TZ-7F196-A

© Whatever It Takes Transmission Parts. Inc.

76020EK	Band, AOD/AODE/4R70W/4R75W/4R70E/4R75E Overdrive Drum (2" Wide) 1992-Up (Raybestos Pro Series)	1	
76024	Band, AOD/AODE/4R70W/4R75W/4R70E/4R75E Reverse 1980-Up	1	F0AZ-7D095-A

PART #	BUSHINGS	QTY.	REFERENCE #
76030	Bushing Kit, AOD (With Cast Iron Drums) 1980-89	1	
76030B	Bushing Kit, AOD/AODE/4R70W/4R75W/4R70E/4R75E (With Stamped Steel Drums) 1990-Up	1	
36034	Bushing, AOD/AODE/4R70W/4R75E/4R70E/4R75E Pump (Babbit) (.760" Tall) 1980-Up	1	
76034	Bushing, AOD/AODE/4R70W/4R75W/4R70E/4R75E Pump (.702" Tall) 1980-Up (Bronze)	1	
76036	Bushing, AODE/4R70W/4R75W/4R70E/4R75E Stator (Front) 1980-Up	1	
76037	Bushing, AOD Stator (Rear) 1980-91	1	
76037B	Bushing, AODE/4R70W/4R75W/4R70E/4R75E (Rear W/Notch) 1992-Up	1	
76037BB	Bushing, AODE/4R70W/4R75W/ 4R70E/4R75E Stator (Rear)(Bronze)(W/Notch) 1992-Up	1	
76038	Bushing, AOD Direct Clutch Drum (W/Cast Iron Drum) 1980-89	1	
76038A	Bushing, AOD/AODE/4R70W/4R75W/4R70E/4R75E Direct Drum (W/Stamped Steel Drum) 1990-Up	1	
76044	Bushing, AOD/AODE/4R70W/4R75W/4R70E/4R75E Center Support 1980-Up	1	
76044B	Bushing, AOD/AODE/4R70W/4R75W 4R70E/4R75E Center Support 1980-Up (Bronze)	1	
76046	Bushing, AOD/AODE/4R70W/4R75W/4R70E/4R75E Reverse Clutch Drum (Rear)(2.630"OD) (.645"Wide) 1980-Up	1	
76046B	Bushing, AOD/AODE/4R70W/4R75W/4R70E/4R75E Reverse Clutch Drum (Front)(2.875"OD) (.285"Wide) 1980-Up	1	
76048	Bushing, AOD Forward Drum Shaft 1980-93	1	
76051	Bushing, AOD/AODE/4R70W/4R75W/4R70E/4R75E Reverse Sun Gear (Shell) 1980-Up	2	
76052	Bushing, AOD/AODE/4R70W/4R75W/4R70E/4R75E Forward Sun Gear 1980-Up	1	
76058	Bushing, AOD/AODE/4R70W/4R75W/4R70E/4R75E Planet (Rear) 1.380"OD 1980-Up	1	
76058B	Bushing, AOD/AODE/4R70W/4R75W/4R70E/4R75E Planet (Front) 2.770"OD 1980-Up	1	
76064	Bushing, AOD/AODE/4R70W/4R75W/4R70E/4R75E Case (2.415"OD)(.685"Wide)(Bronze On Inside Of The Bushing) 1980-Up	1	
76064B	Bushing, AOD/AODE Case (Top Hat, Replaces Case Bushing) 1980-Up	1	
26066	Bushing, AOD Extention Housing (1.500"ID) (Babbit) 1980-92	1	
26066A	Bushing, AOD Extension Housing (1.500"ID) (Bronze) 1980-92	1	
76066B	Bushing, AODE/4R70W/4R75W/4R70E/4R75E Extension Housing (1.606"ID)(Bronze)1993-14	1	
76066BA	Bushing, AODE/4R70W/4R75W/4R70E/4R75E Extension Housing (1.606"ID)(Babbit) 1993-14	1	

PART #	METAL CLAD SEALS	QTY.	REFERENCE #
36070	Seal, AOD Front W/Out Flange	1	C2AZ-7A248-A
36070A	Seal, AOD/AODE Front W/Flange (8.14mm / .320" Overall Thickness)	1	C3OP-7A248-A
76070A	Seal, AOD/AODE Front Pump W/Flange (.360" Thick)	1	E0AZ-7F273-A
76070B	Seal, AODE/4R70W/4R75W/4R70E/4R75E Front Pump W/Flange (Black Viton) 1992-Up (With Bonded Rubber On Outer Diameter)	1	E9TZ-7A248-B
76070C	Seal, AODE/4R70W/4R75W/4R70E/4R75E Front Pump W/Flange (Brown Viton) 1992-Up (Gray Casing With Brown Viton)(Rubber)	1	
36070E	Seal, AODE/4R70W Front Pump W/Flange (National) 1992-Up	1	EPTZ-7A248-E
36072	Seal, AOD/AODE/4R70W/4R75W/4R70E/4R75E Linkage Shaft To Case 1980-Up	1	D5AZ-7B498-A
76073	Seal, AOD Throttle Lever 1980-93	1	E0AZ-7F337-A
44074	Seal, AOD/AODE Rear (With Flange, Without Boot) 1980-92	1	
76074A	Seal, AODE/4R70W/4R75W/4R70E/4R75E Rear (With Short Boot) 1992-Up	1	
44074B	Seal, AOD Rear (With Flange, With Long Boot) 1980-92	1	
76074B	Seal, AODE/4R70W/4R75W/4R70E/4R75E Rear (With Long Boot) 1992-Up	1	
44074C	Seal, AOD/AODE Rear (With Flange, With Short Boot) 1980-92	1	

PART #	FRICTION CLUTCH	QTY.	REFERENCE #
76104	Friction, AOD/AODE Intermediate Clutch (.077") 1980-Up	3	E0AZ-7B164-D
76104A	Friction, AODE/4R70W/4R75W/4R70E/4R75E Intermediate Clutch (.066") (Mark VIII) 1993-Up	3-4	
76104APPK	Friction/Steel Kit, AOD/AODE/4R70W/ Intermediate Clutch (.066") Hi-Performance (Contains: 4-76104AHP, 4-76124D, 1-76144) (Alto) (Powerpack)	1	
76104B	Friction, AODE/4R70W/4R75W/4R70E/4R75E Intermediate Clutch (.066") (Hi Energy Eclipse) 1993-Up	3-4	
76104BHP	Friction, AODE/4R70W/4R75W/4R70E/4R75E Intermediate Clutch (.066") 1993-Up (Blue Plate Special)(Retros To 1980)	1	
76104HP	Friction, AOD/AODE Intermediate Clutch (.080") (Hi Performance) 1980-Up	3	
76106	Friction, AOD/AODE Direct Clutch (.075") 1980-Up	5	E0AZ-7B164-A
76106A	Friction, AOD/AODE Direct Clutch (.075") (Hi-Energy) 1980-Up	AR	
76106C	Friction, AOD Direct Clutch (.059") (Commercial) 1980-93 (Alto)	AR	
76106CHPK	Friction & Steel Kit, AOD Direct Clutch (.059") (Commercial) Hi Performance 1980-93	1	
76106CPK	Friction & Steel Kit, AOD Direct Clutch (.059") (Commercial) 1980-93 (With Pressure Plate)	1	49750A

© Whatever It Takes Transmission Parts. Inc.

PART #	FRICTION CLUTCH (Continued)	QTY.	REFERENCE #
76106E	Friction, AODE/4R70W/4R75W/4R70E/4R75E Direct Clutch (Red Devil) (.068") 1994-Up	5	F75Z-7B164-AA
76106EA	Friction, AODE/4R70W/4R75W/4R70E/4R75E Direct Clutch (Hi Energy) (.068") 1994-Up	5	
76106EBS1	Friction, AODE/4R70W/4R75W/4R70E/4R75E Direct Clutch (.060")(Stage 1) 1994-Up	5	
76106EH	Friction, AODE/4R70W/4R75W/4R70E/4R75E Direct Clutch (.068") 1994-Up	1	
76106EHP	Friction, AODE/4R70W/4R75W/4R70E Direct Clutch (.068") 1994-Up (Hi-Performance) (Will Retro Fit Back To 1980)	1	
76106EHPK	Friction & Steel Kit, AODE/4R70W/4R75W/4R70E/4R75E Direct Clutch (.068")(Powerpak) 1994-Up (Alto)	1	
76106EPK	Friction & Steel Kit, AODE Direct Clutch (.059") (Commercial) 1992-Up (With Pressure Plate)	1	
76106ES1	Friction, AODE/4R75W/4R70E/4R75E Direct Clutch (.068")(Stage 1) 1994-Up (Retro Fits To 1980)	5	
76106HP	Friction, AOD/AODE Direct Clutch (.075") (Hi Performance) 1980-Up	5	
76106HPA	Friction, AOD/AODE Direct Clutch (.075") (Hi Performance) 1980-Up (Indy Reds)	5	
76108	Friction, AOD Reverse Clutch (.080") 1980-L83	4	E0AZ-7B164-B
76108A	Friction, AOD Forward (1980-89) AOD/AODE Reverse (1983-Up) (.061") (5.250"OD) Can Use This For Forward 1990-Up	5-10	E0AZ-7B164-A
76108AHP	Friction, AOD Forward (1980-89) AOD/AODE Reverse (1983-Up) (.061") (5.250"OD) Hi Performance	5-10	
76108APK	Friction & Steel Kit, AOD Reverse Clutch Drum (Cast Iron Drum) 1980-89	5-10	
76108AS1	Friction, AOD Forward (1980-89)/AOD/AODE Reverse (1983-Up)(.061")(5.250"OD)(Stage 1) (Can Use This For The Forward 1990-Up)	1	
76108B	Friction, AOD/AODE/4R70W/4R75W/4R70E/4R75E Forward Clutch (.061") (5.36"OD) 1990-Up With Stamped Steel Drum (Can Use 76108A In Place Of This)	5	F2VP-7E311-A
76119A	Friction Module, AOD 1980-93	1	
76119AHP	Friction Module, AOD (Blue Plate Special) (Raybestos) 1983-Up	1	
76119E	Friction Module, AODE/4R70W 1993-98	1	
76119EA	Friction Module, AODE/4R70W/4R75W/4R70E/4R75E (With Hi Energy Direct & Intermediate Friction) 1994-Up	1	
76119EHP	Friction Module, 4R70W 1992-Up (GPZ With Direct)	1	
76119ES1	Friction Module, AODE/4R70W 1993-Up (Stage 1)(Retro Fits To 1980)	1	

PART #	STEEL CLUTCH	QTY.	REFERENCE #
76124	Steel, AOD/AODE Intermediate Clutch (.069") 1980-Up	3	E0AZ-7B442-B1
76124A	Steel, AOD/AODE/4R70W/4R75W/4R70E/4R75E Intermediate Clutch (.079") 1980-Up	AR	E0AZ-7B442-B2
76124B	Steel, AOD/AODE Intermediate Clutch (.089") 1980-Up	AR	E0AZ-7B442-B3
76124C	Steel, AOD/AODE Intermediate Clutch (.099") 1980-Up	AR	E0AZ-7B442-B4
76124HP	Steel, AOD/ADE Intermediate Clutch (Kolene)(.069") 1980-Up	AR	
76126	Steel, AOD Direct Clutch (.070" Thk)(28 Teeth)(4.865"OD) 1980-89	4	E0AZ-7B442-A
76126A	Steel, AOD/AODE Direct Clutch (.070") (34 Teeth) 1990-95	5-6	E9SZ-7B442-A
76126AA	Steel, 4R70W/4R75W/4R70E/4R75E Direct Clutch (.079") (34 Teeth) 1996-Up	5-6	
76126AAHP	Steel, 4R70W/4R75W/4R70E/4R75E Direct Clutch (Kolene)(.079")(34 Teeth) 1996-Up	5-6	
76126B	Steel, AOD/AODE/4R70W/4R75W/4R70E/4R75E Direct Clutch (.059") (34 Teeth) 1990-Up	5-6	
76126C	Steel, AOD Direct Clutch (.060") (28 Teeth) (Commercial) 1980-89	AR	
76126D	Steel, AOD Direct Clutch (.070") (28 Teeth) (Kolene) 1980-89	AR	
76128	Steel, AOD Forward & Reverse Clutch (.068") (54 Teeth) 1980-89	8	C8AZ-7B442-A
76128A	Steel, AOD/AODE/4R70W/4R75W/4R70E/4R75E Forward Clutch (.069") (34 Teeth) 1990-Up	5	F0SZ-7B442-A
76128AA	Steel, AOD/AODE/4R70W/4R75W/4R70E/4R75E Forward Clutch (.069") (34 Teeth) (Kolene) 1990-Up	5	
76128B	Steel, AOD/AODE/4R70W/4R75W/4R70E/4R75E Reverse Clutch (.068") (32 Teeth) 1990-Up	3-4	F2TZ-7B442-A
76128BA	Steel, AOD/AODE/4R70W/4R75W/4R70E/4R75E Reverse Clutch (.068") (32 Teeth)(Koleen) 1990-Up	1	
76137EAPPK	Friction/Steel Module, AODE/4R70W (With Powerpack Direct Friction) 1996-Up (Hi-Performance) (Alto)	1	
76137EPPK	Friction/Steel Module, AODE (With Powerpack Direct Friction) 1992-95 (Hi-Performance)	1	
76137PPK	Friction/Steel Module, AOD (With Powerpack Direct Friction) 1980-Up (Contains: Kolene Steels (8 Forward (.068"), 8 Direct (.060"), 2 Direct (.070"), 3 Intermediate (.069"), 1 Direct Pressure Plate, 9 Forward Frictions, 8 Powerpack Frictions, 3 Intermediate Frictions)	1	
76139	Steel Module, AOD 1980-E89	1	
76139E	Steel Module, AODE 1992-95	1	
76139EA	Steel Module, AODE/4R70W/4R75W/4R70E/4R75E 1994-Up	1	

PART #	CLUTCH PRESSURE PLATES	QTY.	REFERENCE #
76144	Pressure Plate, AOD Intermediate Clutch (.406") 1980-93	1	E0AZ-7B066-D
76144A	Pressure Plate, AOD Intermediate Clutch (.563") 1982-93	1	E0AZ-7B066-A
76144E	Pressure Plate, AODE/4R70W/4R75W/4R70E/4R75E Intermediate Clutch (.258") 1992-Up	1	F3LY-7B066-BA
76146	Pressure Plate, AOD Direct Clutch (.218") (28 Teeth) 1980-89	1	E0AZ-7B066-E

© Whatever It Takes Transmission Parts. Inc.

76146A	Pressure Plate, AOD/AODE/4R70W/4R75W/4R70E/4R75E Direct Clutch (.218"Thick)(34 Teeth) (3.658"ID) 1990-03	1	E9AZ-7B066-A
76146B	Pressure Plate, AOD/AODE/4R70W/4R75W/4R70E/4R75E Direct Clutch (.240"Thick)(34 Teeth) (3.658"ID) 1990-03	1	
76146BB	Pressure Plate, AOD/AODE/4R70W/4R75W/4R70E/4R75E Direct Clutch (.380"Thick)(34 Teeth) (3.658"ID) 1990-03	1	
76146BD	Pressure Plate, 4R70W/4R75W/4R70E/4R75E Direct Clutch (.218" Thick)(34 Teeth)(3.605"ID) 2004-Up	1	
76146C	Pressure Plate, AOD Direct Clutch (.128") (28 Teeth) (Commercial) 1980-89	1	
76148	Pressure Plate, AOD Forward Clutch 1980-89	1	E0AZ-7B066-C
76148A	Pressure Plate, AOD/AODE/4R70W/4R75W/4R70E/4R75E Forward Clutch 1990-Up	1	F0SZ-7B066-B
76150	Pressure Plate, AOD Reverse Clutch (54 Teeth) Top 1980-89	1	
76150A	Pressure Plate, AOD/AODE/4R70W/4R75W/4R70E/4R75E Reverse Clutch Top (.200" Thick) (34 Teeth) 1990-Up	1	F2TZ-7B066-A
76150B	Pressure Plate, AOD/AODE/4R70W/4R75W/4R70E/4R75E Reverse Clutch Top (.325" Thick) (34 Teeth) 1990-Up	1	
76150C	Pressure Plate, AOD/AODE/4R70W/4R75E/4R70E/4R75E Reverse Clutch (Top) (.345" Thick) (34 Teeth) 1990-Up	1	
76150E	Pressure Plate, AOD/AODE/4R70W/4R75W/4R70E/4R75E Reverse Clutch (Top)(.400" Thick) (34 Teeth) 1990-Up	1	
76151	Pressure Plate, AOD Reverse Clutch (54 Teeth) Bottom (Beveled) 1980-89	1	E0AZ-7B066-B
76151A	Pressure Plate, AOD/AODE/4R70W/4R75E/4R70E/4R75E Reverse Clutch (34 Teeth) Bottom (Beveled) 1990-Up	1	F2TZ-7B066-B

PART #	VALVE BODY KITS	QTY.	REFERENCE #
S76165	Shift Correction Package, AOD 1980-93 (Superior)	1	KAOD
T76165	Shift Kit, AOD 1979-93 (Transgo)	1	SK® AOD
S76165E	Shift Correction Package, AODE/4R70W 1992-00 (Superior)	1	KAOD-E
T76165E	Shift Kit, AODE/4R70W 1991-07 Transgo)	1	SK® AODE
S76165ES	Valve Body Kit, AODE/4R70W (W/Steel Boost Valve & Sleeve) 1991-07 (Superior)	1	KAOD-E-V
S76165K	Shift Correction Package, AOD W/Boost Valve & Sleeve 1980-93 (Superior)	1	KAOD-V
A76169	Valve Body Kit, AOD 2 Stage Pac 1981-Up (Fairbanks)	1	23001-2
76169HPT	Valve Body Kit, 4R75E/4R75W Powertow 2004-Up (Fairbanks)	1	
S76171	Shift Correction Package, AOD (High Performance) 1980-93 (Superior)	1	KAOD-HP
T76171	Reprogramming Kit, AOD High Performance 1983-93 (Heavy Duty & High Performance)(Holds 1st/2nd/3rd To Any RPM)	1	
T76171E	Reprogramming Kit, AODE High Performance 1991-07	1	
T76173E	Reprogramming Kit, AODE 1991-Up Full Manual Control Stick Shift	1	

PART #	OIL SEALING RINGS	QTY.	REFERENCE #
76175A	Ring Kit, AOD (Metal With Seal Plated Governor Rings) 1980-93	1	
76175AA	Ring Kit, AOD (Without Chrome Rings) (Metal) 1980-93	1	
76175E	Ring Kit, AODE/4R70W 1992-03	1	
76175G	Ring Kit, 4R70W/4R75W/4R70E/4R75E 2004-Up	1	
76177ET	Ring, AODE/4R70W/4R75W/4R70E/4R75E Input Shaft (1.130"OD) Scarf Cut (Teflon) 1992-Up	2	F2VY-7B497-A
76177EAT	Ring, AODE/4R70W/4R75W/4R70E/4R75E Input Shaft (1.130"OD) Solid (Teflon) 1992-Up	2	
54177DBT	Ring, 4R70W/4R75W/4R70E/4R75E Direct Clutch 1996-Up (Updated) (Teflon, Solid)	2	
76179	Ring, AOD/AODE/4R70W/4R75W/4R70E/4R75E Stator (Reverse Clutch) 2.624"OD (Metal) 1980-Up	2	E0AZ-7D020-A
76179T	Ring, AOD/AODE/4R70W/4R75W/4R70E/4R75E Stator (Reverse Clutch) 2.624"OD (Teflon) 1980-Up	2	
76180	Ring, AOD/AODE/4R70W Output Shaft (Direct Clutch) .914"OD (Metal) 1980-95	2	E3AZ-7F274-A
76180T	Ring, AOD/AODE/4R70W Output Shaft (Direct Clutch) .914"OD (Teflon) (Scarf Cut) 1980-95	2	E3AZ-7F274-A
76108THP	Ring, AOD/AODE/4R70W Output Sft (Dir Clu)(.914"OD)(Teflon)(Solid)(Blue)	1	
76181	Ring, AOD Stator (Forward Clutch) 2.374"OD (Metal) 1980-92	2	E0AZ-7D019-A
76181E	Ring, AODE/4R70W Stator (Forward Clutch) 2.374"OD (Metal, Hardened) 1993-03	2	F4AZ-7D019-A
76181G	Ring, 4R70W/4R75W/4R70E/4R75E Stator (Forward Clutch) 2.374"OD (Teflon) 2004-Up	2	
76189	Ring, AOD/AODE/4R70W/4R75W/4R70E/4R75E Output Shaft To Case 1.752"OD (Metal, Cast Iron) 1980-Up	3-4	E0AZ-7F273-A
76189A	Ring, AOD/AODE/4R70W/4R75W/4R70E/4R75E Output Shaft To Case 1.752"OD (Metal, Seal Plated) 1980-Up	3-4	E6AZ-7F273-A
76191	Ring, AOD 2-3 Accumulator (Upper) 1.223"OD (Metal) 1980-Up (Rubber Is 76352)	1	
76191T	Ring, AOD/AODE 2-3 Accumulator (Upper) 1.223"OD (Teflon) 1980-86	1	E0AZ--7F273-A
76191AT	Ring, AOD/AODE 2-3/3-4 Accumulator (Lower) 1.994"OD (Teflon) 1980-Up (Also Fits 1-2 (Lower)	2-3	E0AZ-7F249-A
76192T	Ring, AOD 3-4 Accumulator 1.596"OD (Teflon) 1980-Up & AODE 1-2 (Upper) (Rubber Is 76352)	1-2	E0AZ-7F248-A

© Whatever It Takes Transmission Parts. Inc.

PART #	WASHERS & BEARINGS	QTY.	REFERENCE #
76200	Washer Kit, AOD/AODE/4R70W/4R75W/4R70E/4R75E 1980-Up (Contains 5 Pump Selective Washers Only)	1	
76201A	Bearing Kit, AOD (Torrington) (7 Pieces) 1980-E92	1	
76201E	Bearing Kit, AODE (Torrington)(7 Pieces) 1992-95	1	
76201EA	Bearing Kit, 4R70W (Torrington) (7 Pieces) 1993-96	1	
76201EB	Bearing Kit, 4R70W/4R75W/4R70E/4R75E (9 Pieces) 1997-Up	1	
76211	Washer, AOD/AODE/4R70W/4R75W/4R70E/4R75E Stator (.052") #1 (Green) 1980-Up	1	E0AZ-7D014-A
76211A	Washer, AOD/AODE/4R70W/4R75W/4R70E/4R75E Stator (.070") #2 (Yellow) 1980-Up	1	E0AZ-7D014-B
76211B	Washer, AOD/AODE/4R70W/4R75W/4R70E/4R75E Stator (.087") #3 (Brown) 1980-Up	1	E0AZ-7D014-C
76211C	Washer, AOD/AODE/4R70W/4R75W/4R70E/4R75E Stator (.104") #4 (Red) 1980-Up	1	E0AZ-7D014-D
76211D	Washer, AOD/AODE/4R70W/4R75W/4R70E/4R75E Stator (.121") #5 (Blue) 1980-Up	1	E0AZ-7D014-E
76229	Bearing W/Race, AOD Direct Drum To Rear Ring Gear Hub 1980-93	1	E0AZ-7F240-A
76229B	Bearing W/Races, AODE/4R70W Direct Drum (Rear)(.135" Thick)(2.620"OD) 1992-03 (Also Fits 4R70W/4R75W/4R70E/4R75E 2004-Up)	1	F1AZ-FF240-A
76229H	Bearing W/Races, 4R70W/4R75W/4R70E/4R75E Direct Drum (Rear) (.135" Thick) (2.665"OD) 2003-Up (When Out Use 76229B)	1	3C3Z-7F240-AA
76232	Use 36238A	1	E9TZ-7D2234-A
76235	Bearing W/Races, AOD/AODE/4R70W Sun Shell (Front)(2.200"OD)(.129" Thick) 1980-03 (Also Fits AOD Sun Shell Rear # 244 1980-93)(Can Use 76235H)	1-2	E0AZ-7C096-A
76235H	Bearing W/Races, 4R70W/4R75W/4R70E/4R75E Sun Shell (Front) (2.310"OD) 2004-Up (Will Retro Fit 1980-Up)	1-2	3L3Z-7C096-AA
36238A	Bearing W/Races, AOD/AODE/4R70W/4R75W/4R70E/4R75E Forward Drum To Hub 1980-Up	2	E9TZ-7D2234-A
76244A	Bearing, AOD Sun Shell (Rear) 1980-93 (Use 76235)	1	E0AZ-7C096-A
76244B	Bearing W/Races, AODE/4R70W Sun Shell (Rear) (2.040"OD) (.169" Thick) 1992-00	1	F3LY-7F244-A
76244C	Bearing W/1 Race, 4R70W/4R75W/4R70E/4R75E Sun Shell (Rear) (.145" Thick) 2001-Up (Uses A Seperate Race # 76224CA On The Back)	1	3L3Z-7D234-AA
76244CA	Race, 4R70W/4R75W/4R70E/4R75E Sun Shell (Rear) (.058" Thick) (1.457"ID) 2001-Up (Goes With # 76244C Bearing)	1	3L3Z-7D235-AA
76247	Bearing, AOD/AODE/4R70W Rear Planet (Inside Planet) 1980-Up (Use 76251)	1	E0AZ-7F243-A
76247A	Washer, AOD Rear Planet (Bronze) Bearing Replacement	1	
76247AA	Bearing W/Races, AODE/4R70W/4R75W/4R70E/4R75E Sun Gear #612 To Rear Planet (Inside Planet)(.191" Thick)(2.178"OD)(1.290"ID) 1992-Up	1	
76251	Bearing W/Races, AOD/AODE/4R70W Direct Drum To Hub (.185" Thick)(28 Needles) 1980-03	1-2	E0AZ-7F243-A
76251H	Bearing W/Races, 4R70W/4R75W/4R70E/4R75E Direct Drum To Hub (.185" Thick)(20 Needles) 2004-Up	1	
76252B	Race, AODE/4R70W/4R75W/4R70E/4R75E Direct Drum To Hub 1992-Up (Also Fits AOD 1980-93	1	F4AZ-7F237-A
76257	Washer, AOD Reverse Drum To Forward Drum 1980-84	1	E0AZ-7A166-A
76257A	Bearing, AOD/AODE/4R70W/4R75W/4R70E/4R75E Reverse Drum To Forward Drum 1983-Up	1	E1TZ-7A166-A
76260	Bearing W/Race, AOD Rear Ring Gear Support To Case 1980-92	1	E0AZ-7F242-A
76260A	Bearing W/Race, AODE/4R70W Rear Ring Gear Support To Case (3.435"OD) 1992-03 (Use 76260H)	1	F3LY-7F242-A
76260H	Bearing W/Race, 4R75W/4R70E/4R75E Rear Ring Gear Support To Case (3.115"OD) 2004-Up (Retro Fits To 1992)	1	3L3Z-7F242-AA

PART #	GASKETS & RUBBER COMPONENTS	QTY.	REFERENCE #
76300	Gasket, AOD Pan 1980-93 (Cork)	1	E0AZ-7A191-A
76300F	Gasket, AOD Pan 1980-93 (Farpak)	1	
76300E	Gasket, AODE/4R70W/4R75W/4R70E/4R75E Pan 1992-Up (Cork)	1	F2VY-7A191-A
76300EF	Gasket, AODE/4R70W/4R75W/4R70E/4R75E Pan 1992-Up (Farpak)	1	
76300EW	Gasket, AODE/4R70W/4R75W/4R70E/4R75E Pan 1992-Up (Bonded)	1	
76305	Gasket, AOD/AODE Extension Housing 1980-95	1	E0AZ-7086-A
76305G	Gasket, 4R70W/4R75W/4R70E/4R75E Extension Housing (Metal Core With Paper Gaskets With Silicone Bead) 1993-08	1	F6AZ-7086-A
76305H	Gasket, 4R70W/4R75W/4R70E/4R75E Extension Housing (Thick Paper) 2009-Up	1	
76305HA	Gasket, 4R70W/4R75W/4R70E/4R75E Extension Housing (Metal With Bonded Rubber) 2009-Up (Fits Some 2007-08)	1	
76310	Gasket, AOD Pump 1980-93	1	E3SZ-7A136-A
76310A	Gasket, AODE/4R70W/4R75W/4R70E/4R75E Pump 1992-Up	1	F2VY-7A136-A
76311	O-Ring, AOD/AODE/4R70W/4R75W/4R70E/4R75E Pump 1980-Up	1	E0AZ-7A248-A
76320	Gasket, AOD Valve Body (Upper)(Split White Stripe) 1980-93	1	E0AZ-7C099-B
76320E	Gasket, AODE/4R70W Valve Body (Upper) (Yellow Stripe) 1992-95	1	F2VY-7C155-A
76320EA	Gasket, 4R70E/4R75E/4R70W/4R75W Valve Body (Upper) 1996-Up	1	F7AZ-7C155-AA
76321	Gasket, AOD Valve Body To Plate (Lower)(Double White Stripe) 1980-89	1	E9AZ-7D100-A
76321B	Gasket, AOD Valve Body To Plate (Lower)(Brown Stripe) 1990-93	1	F0AZ-7D100-A
76321E	Gasket, AODE Valve Body To Plate (Lower)(Green Stripe) 1992-95	1	F3LY-7D100-A
76321EA	Gasket, 4R70W Valve Body To Plate (Lower) (White Stripe) 1996-00	1	F7AZ-7D100-AA
76321EB	Gasket, 4R70W/4R75W/4R70E/4R75E Valve Body To Plate (Lower) (Blue Stripe) 2001-Up	1	

FORD

© Whatever It Takes Transmission Parts. Inc.

76322E	Gasket, AODE Valve Body To Valve Body Cover Plate1992-95	1	F2VY-7H173-A
76322EA	Gasket, 4R70W/4R75W/4R70E/4R75E Valve Body To Cover 1996-Up	1	F6AZ-7H173-A
76326	Gasket, AOD Filter 1980-93	1	E0AZ-7E062-A
76332	Lip Seal, AOD/AODE/4R70W Intermediate Clutch (Inner) 1980-03	1	E0AZ-7F225-A
76333	Lip Seal, AOD/AODE/4R70W Intermediate Clutch (Outer) 1980-03	1	E0AZ-7F224-A
76334	Lip Seal, AOD/AODE/4R70W/4R75W/4R70E/4R75E Forward Clutch (Inner) 1980-Up	1	E0AZ-7C099-A
76335	Lip Seal, AOD/AODE/4R70W/4R75W/4R70E/4R75E Forward Clutch (Outer) 1980-Up	1	E0AZ-7A548-A
76336	Lip Seal, AOD/AODE/4R70W/4R75W/4R70E/4R75E Direct Clutch (Inner) 1980-Up	1	E0AZ-7C099-B
76337	Lip Seal, AOD/AODE/4R70W/4R75W/4R70E/4R75E Direct Clutch (Outer) 1980-Up	1	E0AZ-7A548-B
76338	Lathe Cut Seal, AOD/AODE/4R70W/4R75W/4R70E/4R75E Reverse Clutch (Inner) 1980-Up	1	E0AZ-7D404-A
76339	Lathe Cut Seal, AOD/AODE/4R70W/4R75W/4R70E/4R75E Reverse Clutch (Outer) 1980-Up	1	E0AZ-7D403-A
76352E	O-Ring, AODE 1-2 Accumulator (Small) 1992-96	1	
76352EA	O-Ring, AODE 1-2 Accumulator (Large) 1992-96	1	
76352K	O-Ring Kit, AOD Accumulator O-Rings & Metal Rings Kit	1	
76354	O-Ring, AOD 3-4 Accumulator Cover 1980-92 (Also Fits AODE 1-2 Accumulator Cover 1992-96)	1-2	E0AZ-7F294-A
76360	O-Ring, AODE 1-2 Accumulator Cover 1992-96 (Use 76354)	1	
76367	Lathe Cut Seal, AOD/AODE4R70W/4R75W/4R70E/4R75E Overdrive Servo Cover 1980-Up	2	E0AZ-7D026-A
76367A	O-Ring, AOD Overdrive Servo Piston (1.937") 1980-93	1	E0AZ-7D024-A
76367AA	O-Ring, AOD Overdrive Servo Piston (2.250") 1980-93	1	E0AZ-7D024-B
76367AB	O-Ring, AOD Overdrive Servo Piston (2.437") 1989-93	1	E9SZ-7D024-A
103368	O-Ring, AOD/AODE Spd-O Sleeve(Inner)	1	
44371A	O-Ring, AOD/AODE/4R70W Filler Tube 1980-Up	1	6264902
76374	O-Ring, AOD/AODE/4R70W Output Shaft To Yoke 1980-Up	1	
76377	O-Ring, AOD Neutral Safety Switch 1980-93	1	87009-S100
T76378V	O-Ring, AOD/AODE/4R70W/4R75W/4R70E/4R75E Cooler Line (Viton) Push In Type (5/16" Line) (Teckpak	1	
76379	Boot, AOD Filter To Case 1980-93	1	
76379A	Seal, AODE/4R70W Filter To Case 1992-Up	1	
76390	External Seal Kit, AOD 1980-Up	1	
76390E	External Seal Kit, AODE/4R70W/4R75W/4R70E/4R75E (Cork) 1992-Up	1	

PART #	TECHNICAL MANUALS	QTY.	REFERENCE #
76400	Technical Manual, AOD 1980-93	1	83-AODTM
76400E	Technical Manual, AODE 1992-Up	1	83-AODETM
76400EA	Tech Manual, 4R70W (Update Hand Book) (ATSG)	1	
76401	Technical Manual On CD, AOD	1	
76401EA	Technical Manual On CD, 4R70W (Update Hand Book)(ATSG)	1	
76407A	Technical Video, AODE With Manual	1	83-SGVT-24

PART #	ELECTRICAL COMPONENTS	QTY.	REFERENCE #
56410	Switch, AOD Neutral Safety (5 Pin) 1990-93	1	E6TZ-7A247A
56410A	Switch, AOD Neutral Safety (4 Prong) 1980-89	1	D6RY-7A247-B
76410B	Switch, AOD Neutral Safety (4 Pin) 1990-93	1	FOVY-7A247-A
76410E	Switch, AODE Neutral Safety (8 Pin) 1992-97	1	F5AZ-7A247-A
76410EA	Switch, 4R70W Neutral Safety (11 or 12 Pin) 1997-Up (Except Crown Victoria & Grand Marque)	1	F7LZ-7F293-AB
76410EB	Switch, 4R70W Neutral Safety (11 or 12 Pin) 1997-03 (Crown Victoria & Grand Marque 1997-Up)		1
76416A	Shudder Fix, AODE TC (Circuit Board) 1992-97 (ATG)	1	76918-SF
T76420	Shift Solenoid Pack, AODE Dual Solenoid 1992-Up (Teckpak)	1	
T76420K	Solenoid Master Kit, AODE 1992 (Teckpak)	1	MS-AODE
T76420AK	Solenoid Master Kit, AODE L1995-97 (Contains: 1 Shift Pack, 1 Lock-Up, 1 Pressure Regulator Solenoid) (Teckpak)	1	MS-AODE-95
76421	Solenoid, AODE/4R70W Shift (Dual Pack) 1992-97	1	F5AZ-7G484-A
76421A	Solenoid, 4R70W/4R75W/4R70E/4R75E Shift (Dual) 1998-08	1	F8AZ-7G484-AB
76421C	Solenoid, 4R75W/4R75E Shift (Dual) 2009-Up (Soft Wire Type 76446F)	1	
T76425	Solenoid, AODE/4R70W Lock-Up Solenoid 1992-E95 (Teckpak)	1	
76425B	Solenoid, AODE/4R70W Lock-Up (TCC) (PWM) (Black Or Red Connector) 1992-E95	1	F2VP-7G136-AC
76425BA	Solenoid, AODE/4R70W Lock-Up (TCC) (PWM) (White Or Pink Connector) L1995-97	1	F5AZ-7G136-AA
76425BB	Solenoid, 4R70W/4R75W/4R70E/4R75E Lock-Up (TCC) 1998-08	1	F8AZ-7G136-AA
76425C	Solenoid, 4R70W/4R70E/4R75W/4R75E Lock-Up (TCC)(Softwire) 2009-Up	1	
76431	Solenoid, AODE/4R70W EPC (Electronic Pressure Control) 1992-97	1	F6AZ-7G383-AA
76431A	Solenoid, 4R70W/4R75W/4R70E/4R75E EPC (Electronic Pressure Control)(With Green Or Red Connector) 1998-04	1	F8AZ-7G383-AA
76431B	Solenoid, 4R70W/4R75W/4R70E/4R75E EPC (With Tan Or Yellow Connector)(3.250" Long) 2001-04 (Can Use 76431A)	1	XL3Z-7G383-AB
76431C	Solenoid, 4R70W/4R75W/4R70E/4R75E EPC (3.160" Long) 2005-08 (With Tan Or Yellow Connector, This Replaces The Black Connector)	1	5C2Z-7G383-AB
76431D	Solenoid, 4R70W/4R75W/4R70E/4R75E EPC 2009-Up	1	

© Whatever It Takes Transmission Parts. Inc.

PART #	ELECTRICAL COMPONENTS (Continued)	QTY.	REFERENCE #
76436A	Sensor, AODE/4R70W Output Speed (With 2 O-Rings) 1992-00	1	F4AZ-7H103-A
76436B	Sensor, 4R70W/4R75W/4R70E/4R75E Output Speed (With 1 O-Ring) 2001-03	1	XR3Z-7H103-AA
76436C	Sensor, 4R75W/4R70E/4R75E Output Speed 2004-Up	1	
86437	Sensor, AODE/4R70W Transmission Oil Temperature 1992-97	1	F1DZ-7H141-A
76438A	Sensor, 4R70W/4R75W4R70E/4R75E Turbine Shaft Speed (With 1 O-Ring) 2004-Up	1	3L3Z-7M101-AA
76444A	Connector, 4R70W/4R75W/4R70E/4R75E Case 1998-Up	1	F8AZ-7G276-AA
86445EBK	Repair Kit, 4R70W External Wire Harness (Rostra)	1	
86445ECK	Repair Kit, AXOD/AXODE/AX4N Speed Sensor Wire Harness Connector (Fits 36438, 36774D, 86774B, 86774C, 86774H, F85Z-2L373AB)	1	
76446A	Wire Harness, AODE/4R70W Internal With 9 Pin Connector 1992-97 (Soft Wire)	1	F2VY-7G276-A
76446E	Wire Harness, 4R70W/4R75W/4R70E/4R75E Internal 1998-Up (Black Plastic Enclosed Circuit Board With Connectors)(With TOT Sensor)	1	
	With Connectors) 1998-Mid 2008	1	F8AZ-7G276-BA
76446F	Wire Harness, 4R70E/4R75E/4R70W/4R75W Internal Late 2009-Up (Soft Wire)(Black Connector)	1	
T76446UC	Repair Clip, 4R70W (Repair Broken Solenoid Clips)(Teckpak)(Per 5 Pieces)	1	
F85Z-2L373AB	Speed Sensor, Rear Axle Housing (Output Speed) 1990-97 Aerostar, 1990 Bronco II, 1990-06 E-150/250/350, 1990-03 F-150, 1991-01 Expedition/Mountaineer, 1990-99 F250, 1999-04 SD F250-F450, 2000-06 Excursion, 1990-03 Ranger, 2000-01 Sporttrac, 1997-02 Expedition	1	

PART #	MISC. COMPONENTS	QTY.	REFERENCE #
76447	Interceptor, AODE Adjustable Electronic Modulator (External) Allows TCC & Line Pressure To Be Fine Tuned	1	INT 76 A
76449	E Place, AODE Electronic Controller Kit (ATG)	1	EP76-A
M462F	Union, 5/16”	1	
76483	Pin, AODE (Oversize) (Under #691 Sleeve) (Blocks Off Governor Oil Not Needed On AODE)	1	
26487	Grommet, AOD Linkage Grommet (5/16”ID)	1	D4AZ-7341-A
26487A	Grommet, AOD Linkage Grommet (5/8”ID)	1	
76487A	Bushing, AOD Carburator-End Of T.V. Rod (Steel Repalcement Bushing)	1	F3SZ-7H303-B
76487AK	Bushing, AOD Carburator-End Of T.V. Rod (Steel Replacement Bushing) (3 Per Pack)	1	
26487B	Grommet, AOD Passing Gear Grommet (Narrow Groove) Green	1	E0AZ-7F330-A
26487BA	Grommet, AOD Passing Gear Grommet (Wide Groove) Black	1	
26487BW	Grommet, AOD/AODE/4R70W Passing Gear (Narrow Groove) Yellow	1	
26487C	E-Clips, AOD Linkage	1	
T76496	Cooler Line Repair Kit, AOD (Teckpak)	1	E3AZ-7D273-A
T76496C	Retaining Clip, AOD/AODE/4R70W Cooler Line Fitting (Plastic, Push In Type) Ford (Teckpak)	1	
T76496K	Kit, O-Ring Installation Cooler Line, (Ford) (Teckpak)	1	
44497-1	Detent Cable End, AOD Teardrop Style Connector (This Is The OE Style (No Slot) Cable Must Be Crimped)	1	
T76497B	Detent Cable, AOD (Truck & SUV Only)(Teckpak)	1	
T76498-1	Grommet, Ford Shift Cable Repair (Fits Most 1997-08 Trucks & 2002-05 Explorer, Expedition, Navigator & Mountaineer)	1	

PART #	HARD PARTS	QTY.	REFERENCE #
76500	Pump, AOD 1980-93	1	
76500A	Pump, AODE 1992-94 (.568” Pump Gears) (Can Use 76500B)	1	
76500B	Pump, AODE/4R70W (.608” Pump Gears)(Uses An Aluminum Intermediate Piston) 1995-03	1	
76500G	Pump, 4R70W/4R75W/4R70E/4R75E (.608” Gears)(Uses A Bonded Intermediate Piston) 2004-Up	1	3L3Z-7A103-AA
76500GA	Pump, 4R70W/4R75W/4R70E/4R75E (.655” Gears)(Uses A Bonded Intermediate Piston) 2006-Up	1	
76510	Pump Body, AOD (Cast Iron) 1980-93	1	E0AZ-7A103-A
76510A	Pump Body, AODE (Aluminum) 1992-94 (.568” Gears) (Can Use 76510B)	1	F2AZ-7A103-A
76510B	Pump Body, AODE/4R70W (Aluminum) (.608” Gears) (Uses Aluminum Intermediate Piston) 1995-03	1	
76510G	Pump Body, 4R70W/4R75W/4R70E/4R75E (.608” Gears)(Uses A Bonded Intermediate Piston) 2004-Up (Can Use 76510GBK)	1	
76510GA	Pump Body, 4R70W/4R75W/4R70E/4R75E (.655” Gears)(Uses A Bonded Intermediate Piston) 2006-Up	1	
76510GBK	Pump Body Kit, AODE/4R70W (.608” Gears) 1995-03 (Contains: 76510B, U76962, U76972E) (This Kit Will Replace The 76510G)	1	
76520	Stator, AOD Pump 1980-93	1	E0AZ-7A108-A
76520A	Stator, AODE Pump 1992-94 (Can Use 76520B)	1	F4AZ-7A108-A
76520AC	Stator, AODE Conversion	1	
76520B	Stator, 4R70W Pump (Uses Metal Rings #181) 1995-03 (Can Use 76520G With .120” Thick Rings)	1	

© Whatever It Takes Transmission Parts. Inc.

76520G.....Stator, 4R70W/4R75W/4R70E/4R75E Pump (Uses Teflon Rings #181) 2004-Up (Can Use
.....76520B With .075" Thick Rings).....1 .....3L3Z-7A108-AA

PART #	PUMP COMPONENTS	QTY.	REFERENCE #
S76507S	Stator Support Sleeve, AOD/AODE/4R70W Prevents Converter Release Leakage (Sonnax)	1	76204-01
36530	Gear Set, AOD Pump 1980-93	1	C6AP-7C010-B

PART #	HARD PARTS (Continued)	QTY.	REFERENCE #
76530A	Gear Set, AODE Pump (.569" Thick) 1992-94	1	
76530B	Gear Set, AODE/4R70W/4R75W/4R70E/4R75E Pump (.608" Thick) 1995-Up	1	
76530BX	Pump Gear Set, AODE/4R70W/4R75W/4R70E/4R75E (.608" Thick)(Oversized)(3.900"OD) 1995-Up	1	
76530GA	Pump Gear Set, 4R70W/4R75W/4R70E/4R75E (.655" Thick)(3.860"OD) 2006-Up	1	
76530GAX	Pump Gear Set, 4R70W/4R75W/4R70E/4R75E (.655" Thick)(Oversized)(3.900"OD) 2006-Up	1	
76554K	Drum, AOD Forward With Hollow Input Shaft (5 Clutch) Cast Iron 1980-93 (Input Shaft Has A Bushing Inside Front)	1	E4AZ-7F207-A
76554AK	Drum, AOD Forward With Hollow Input Shaft (5 Clutch) Stamped Steel 1989-93 (Input Shaft Has A Bushing Inside Front)	1	F0SZ-7F207-A
76554BK	Drum, AOD Forward With Hollow Input Shaft (4 Clutch) Cast Iron 1980-93 (Input Shaft Has A Bushing Inside Front)	1	
76554CHPK	Drum Kit, AOD/AODE/4R70W/4R75E Forward Clutch (Smart-Tech) High Capacity (Contains Drum, Bottom Steel Plate (.055"Thick) & Retaining Ring (.061"Thick)(Sonnax)	1	
76554CK	Drum, AODE/4R70W/4R75W/4R70E/4R75E Forward With Solid Shaft (5 Clutch) (Stamped Steel) 1992-Up	1	E4AZ-7F207-B
76555	Drum, AOD Direct (3 Clutch) (Cast Iron) 1980-81	1	
76555A	Drum, AOD Direct (3 Clutch) (Cast Iron) 1982-93	1	
76555B	Drum, AOD Direct (4 Clutch) (Cast Iron) 1980-81	1	
76555BA	Drum, AOD Direct (4 Clutch) (Cast Iron) 1982-93	1	
76555BB	Drum, AOD/AODE/4R70W Direct Clutch (4 Clutch) (Stamped Steel) 1989-98 (Use 76555D)	1	
76555CA	Drum, AOD Direct (5 Clutch) (Cast Iron) 1982-93	1	F2AZ-7F283-B
76555CB	Drum, AOD Direct (6 Clutch) (Cast Iron) 1982-93	1	
76555D	Drum, AODE/4R70W/4R75W/4R70E/4R75E Direct (4 or 6 Clutch) (Stamped Steel) 1989-Up (The 6 Clutch Uses A 76146A Pressure Plate)	1	
76555DHPK	Drum with Shift Kit, AOD/AODE/ 4R70W/4R75W/4R70E/4R75E Direct Clu (One Piece Drum Shaft Design)(Hardened Steel)(Heat-Treated Steel Sun Gear)(Contains: 31 Tooth Forward Sun Gear, Drum with Shaft, Piston, Outer & Inner Seals)	1	
76555DK	Drum Kit, AOD/AODE/4R70W/4R75W/4R70E/4R75E Direct (6 Clutch) (Stamped Steel) 1989-Up (Contains: Drum, Piston Kit, Frictions, Steels & Pressure Plate)	1	F2AZ-7F283-A
76556	Drum, AOD Reverse W/Out Sprag (4 Clutch) Uses A Washer # 257 (Cast Iron) 1980-E83	1	E0WY-7D044-B
76556K	Drum, AOD Reverse With Sprag (4 Clutch) Uses A Washer # 257 (Cast Iron) 1980-E83	1	
76556A	Drum, AOD Reverse W/Out Sprag (4 Clutch) Uses A Bearing # 257 (Cast Iron) L1983-93 (Can Use 76556AAK)	1	E2AZ-7D044-B
76556AK	Drum, AOD Reverse With Sprag (4 Clutch) Uses A Bearing # 257 (Cast Iron) L1983-93 (Can Use 76556AAK)	1	
76556AAK	Drum, AOD Reverse With Sprag (4 Clutch) Uses A Bearing # 257 L1983-93 (Contains: A 3 Clutch Drum With Machined Pressure Plate & Snap Ring Groove)	1	
76556B	Drum, AOD Reverse W/Out Sprag (3 Clutch) Uses A Washer # 257 (Cast Iron) 1980-E83	1	E2AZ-7D044-A
76556BK	Drum, AOD Reverse With Sprag (3 Clutch) Uses A Washer # 257 (Cast Iron) 1980-E83	1	
76556C	Drum, AOD Reverse W/Out Sprag (3 Clutch) Uses A Bearing # 257 (Cast Iron) L1983-93	1	E5TZ-7D044-C
76556CK	Drum, AOD Reverse With Sprag (3 Clutch) Uses A Bearing # 257 (Cast Iron) L1983-93	1	
76556D	Drum, AODE Reverse W/Out 7 Roller Sprag (4 Clutch) (Stamped Steel) 1992-95	1	F4AZ-7D044-A
76556DK	Drum, AODE Reverse With 7 Roller Sprag (4 Clutch) (Stamped Steel) 1992-95	1	
76556E	Drum, 4R70W Reverse W/Out 14 Roller Sprag (4 Clutch) (Stamped Steel) 1995-97	1	F3LY-7D044-A
76556EK	Drum, 4R70W Reverse With 14 Roller Sprag (4 Clutch) (Stamped Steel) 1995-97	1	
76556G	Drum, 4R70W/4R75W/4R70E/4R75E Reverse W/Out Diode Sprag 1998-Up (3 or 4 Clutch According to Pressure Plate Used) (Stamped Steel) (Has 14 Splines On Drum Where Diode Inner Race Rides)	1	F8AZ-7D044-AA
76556GK	Drum, 4R70W/4R75W/4R70E/4R75E Reverse With Diode Sprag 1998-Up (3 or 4 Clutch According to Pressure Plate Used) (Stamped Steel) (Has 14 Splines On Drum Where Doide Inner Race Rides)	1	
76556H	Drum, 4R70W/4R75W/4R70E/4R75E Reverse (Without Diode Sprag) 1998-Up (3 Or 4 Clutch According To Pressure Palte Used)(Stamped Stel)(Has 78 Splines On Drum Where Diode Inner Race Rides)	1	
76556HK	Drum, 4R70W/4R75W/4R70E/4R75E Reverse (With Diode Sprag) 1998-Up (3 Or 4 Clutch According To Pressure Palte Used)(Stamped Steel)(Has 78 Splines On Drum Where Diode Inner Race Rides)	1	
76562	Piston Kit, AOD/AODE/4R70W Intermediate Clutch (Aluminum) 1980-03 (9 Springs)	1	
76562H	Piston Kit, 4R70W/4R75W/4R70E/4R75E Intermediate Clutch (Bonded) 2004-Up (24 Springs)	1	

© Whatever It Takes Transmission Parts. Inc.

PART #	HARD PARTS (Continued)	QTY.	REFERENCE #
76564	Piston Kit, AOD Forward Clutch 1980-93	1	
76564A	Piston Kit, AODE Forward Clutch (1.050" Overall Thickness) (No Cast #) 1992-95	1	
76564B	Piston Kit, 4R70W/4R75W/4R70E/4R75E Forward Clutch (1.020" Overall Thickness) (Cast # RFF6) 1995-Up	1	
76565	Piston Kit, AOD Direct Clutch (Cast Iron Drum) (Check Ball Is Staked In Piston, No Metal Retainer) (Can Use 76565A) 1980-93	1	
76565A	Piston Kit, AOD Direct Clutch (Cast Iron Drum) (Has A Metal Check Ball Retainer) 1980-93	1	
76565B	Piston Kit, AOD/AODE/4R70W/4R75W/4R70E/4R75E Direct Clutch (Stamped Steel Drum) 1989-Up	1	
76566	Piston Kit, AOD Reverse Clutch (.414") 1980-93	1	
76566A	Piston Kit, AODE/4R70W/4R75W/4R70E/4R75E Reverse Clutch (.494") 1992-Up	1	
76574	Clutch Hub, AOD Forward Clutch 1980-93	1	E0AZ-7B067-A
76574A	Clutch Hub, AODE/4R70W/4R75W/4R70E/4R75E Forward Clutch 1992-Up	1	F2AZ-7B067-A
76575A	Clutch Hub, AOD Direct Clutch (Cast #AA) 1980-82 (Use 76575AA)	1	E0AZ-7F236-A
76575AA	Clutch Hub, AOD/AODE/4R70W/4R75W/4R70E/4R75E Direct Clutch (Cast #AB) 1983-Up (Retro Fits 1980-Up)	1	E0AZ-7F236-B
76583HA	Planet Kit, 4R70W/4R75W/4R70E/4R75E (Top Cover Is 5.115"OD And Is Welded On) 2004-Up (Contains: 76624HA, 594C, 244C, 244CA, 612A, 584H)	1	
76584	Planet, AOD 1980-82 (Use 76584A)	1	
76584A	Planet, AOD/AODE (Top Cover Is 4.750"OD) 1983-UP	1	E6AZ-7A398-A
76584B	Planet, AODE/4R70W (Top Cover Is 4.845"OD & Rivited On) (25 Teeth On Long Gears) 1992-03	1	F2AZ-7A398-A
76584H	Planet, 4R70W/4R75W/4R70E/4R75E (Top Cover Is 5.115"OD & Is Welded On) 2004-Up (Will Retro Fit The 76584B)(Can Use 76584B)	1	
76594	Ring Gear, AOD Planet (72 Teeth No Holes) 1980-83	1	E0AZ-7A153-A
76594A	Ring Gear, AOD/AODE Planet (72 Teeth With Holes) 1983-95	1	F2AZ-7A153-A
76594B	Ring Gear, AODE/4R70W (88 Teeth With Holes) (Park Lugs Are 15/16" Long) 1992-Up	1	F3AZ-7A153-A
76594C	Ring Gear, 4R70W/4R75W/4R70E/4R75E (88 Teeth No Holes)(Park Lugs Are 1 5/8" Long) 2004-Up	1	3L3Z-7A233-BA
76604	Hub, AOD Ring Gear (5.380"OD) (Bearing #229 Has 1 Race) 1980-91	1	E0AP-7D164-A
76604AA	Hub, AOD/AODE Ring Gear (5.380"OD) (Bearing # 229 Has 2 Races) 1992-95	1	
76604C	Hub, AODE/4R70W/4R75W/4R70E Ring Gear (5.160"OD) 1992-Up	1	F3LY-7D164-B
76612	Sun Gear, AOD/AODE Forward (30 Teeth) 1980-95	1	E0AZ-7A399-A
76612A	Sun Gear, AODE/4R70W Forward (31 Teeth)(1.177" Thick Gear) (No Groove On Splines) (Uses A 1 Piece Bearing # 244B) 1992-00	1	F3LY-7A399-A
76612H	Sun Gear, 4R75W/4R70E/4R75E Forward (31 Teeth, 1.167" Thick Gears)(1 Groove On Splines) (Uses A 2 Piece Bearing #244C & 244CA) 2001-Up	1	
76624	Shell W/Sun Gear, AOD (36 Teeth) (4 3/8" Tall) (Use With Cast Iron Reverse Drum) 1980-93	1	E0AZ-7A019-A
76624A	Shell W/Sun Gear, AOD/AODE (36 Teeth) (4 1/8" Tall) (Use With Stamped Steel Reverse Drum) 1989-97	1	F2AZ-7A019-A
76624B	Shell W/Sun Gear, AODE/4R70W (38 Teeth) (2.058" Thick) 1992-00 (The 2.058" Thick Is From Where Bearing #235 To Bearing #244 Rides)	1	
76624C	Shell W/Sun Gear, 4R70W (38 Teeth) Made With Ferrous Metal 2001-03 (2.023" Thick From Where Bearing #235 TO Bearing #244 Rides)		
76624CK	Shell W/Sun Gear Kit, 4R70W (38 Teeth) (With #624, 244 & 612) 2001-03 (Made Of Ferrous Metal) (Will Retro Fit All AODE 38 Teeth 1992-03)	1	4L3Z-7D234-AA
76624H	Shell W/Sun Gear, 4R70W/4R75W/4R70E/4R75E (38 Teeth) 2004 (With 8 Rivits On Inside Front) Non Ferrous Metal (Non Magnetic)	1	
76624HA	Shell W/Sun Gear, 4R70W/4R75W/4R70E/4R75E (38 Teeth) 2005-Up (No Rivits) Non Ferrous Metal (Non Magnetic) Retro Fit 2004	1	5L3Z-7A019-AB
76630	Center Support, AOD/AODE/4R70W (With 6 Outer Lugs) 1980-03	1	E0AZ-7A130-A
76630H	Center Support, 4R70W/4R75W/4R70E/4R75E (With 5 Outer Lugs) 2004-Up	1	
76638E	Anti-Rattle Clip, 4R70W/4R75W/4R70E/4R75E (Sets Between The Case And The Intermediate Steels And Pressure Plate) 2004-Up	1	
76639	Spring, AOD/AODE/4R70W Anti-Clunk (Round Type) 1980-03	1	F5AZ-7F277-AA
76639H	Spring, 4R70W/4R75W/4R70E/4R75E Anti-Clunk (Horse Shoe Type) 2004-Up	1	2L3Z-7F277-AA

PART #	SPRAGS & ONE WAY CLUTCHES	QTY.	REFERENCE #
76652	Sprag, AOD/AODE Intermediate (7 Roller) Tan (Can Use 76652B)	1	E0AZ-7A089-A
76652A	Sprag, 4R70W Intermediate (14 Roller) 1995-97	1	F7LY-7A089-AA
76652B	Sprag, AOD/AODE/4R70W Intermediate (7 Roller) Green 1980-97	1	
76652C	Mechanical Diode, 4R70W/4R75W/4R70E/4R75E Intermediate (14 Inner Splines) 1998-Up	1	F8AZ-7A089-AA
34654	Sprag, AOD/AODE/4R70W/4R75W/4R70E/4R75E Rear 1980-Up	1	930681

PART #	HARD PARTS (Continued)	QTY.	REFERENCE #
76663	Outer Race, AOD/AODE/4R70W Intermediate Sprag (7 Roller) 1980-97	1	E0AZ-7F221-A

© Whatever It Takes Transmission Parts. Inc.

76663K	Outer Race Kit, AOD/AODE Intermediate Sprag (7 Roller) (Contains: # 76663, 76694, 76874) 1980-95	1	
76663B	Outer Race, 4R70W Intermediate Sprag (14 Roller) 1995-97	1	F3LY-7F221-A
76663BK	Outer Race Kit, 4R70W Intermediate Sprag (14 Roller) (Contains: # 76663B, 76694A & 76874A) 1995-97	1	
76670	Shaft, AOD Direct Drive 1980-93	1	E9SZ-7F208-A
76670A	Shaft, AODE/4R70W/4R75W/4R70E/4R75E Direct Drive 1992-Up	1	F8AZ-7F351-AA
S76670AHD	Shaft, AODE/4R70W/4R75W/ 4R70E/4R75E Direct Drive (300m Ultra-Strength Steel)(Rolled Splines)(Shot Penned)(Heavy-Duty)(Sonnax)	1	
76678A	Output Shaft, AOD (16” Long) (7 Teeth Speed-O With 3 Governor Oil Holes) 1980-87	1	E8VY-7060-A
76678AA	Output Shaft, AOD (16” Long) (7 Teeth Speed-O With 4 Governor Oil Holes) 1988-93	1	
76678AB	Output Shaft, AODE/4R70W (16” Long) (7 Teeth Speed-O With 2 Governor Oil Holes) 1992-03	1	
76678AD	Output Shaft, 4R70W/4R75W/4R70E/4R75E 2WD (16” Long) (No Speed-O)(With 2 Oil Holes) 2004-Up	1	
76678B	Output Shaft, AOD (16” Long) (8 Teeth Speed-O With 3 Governor Oil Holes) 1980-87	1	E0VY-7D060-A
76678BA	Output Shaft, AOD (16” Long) (8 Teeth Speed-O With 4 Governor Oil Holes) 1988-93	1	
76678BB	Output Shaft, AODE (16” Long) (8 Teeth Speed-O With 2 Governor Oil Holes) 1992-Up	1	
76678C	Output Shaft, AOD (16” Long) (9 Teeth Speed-O With 3 Governor Oil Holes) 1980-87	1	E1TZ-7060-A
76678CA	Output Shaft, AOD (16” Long) (9 Teeth Speed-O With 4 Governor Oil Holes) 1988-93	1	
76678D	Output Shaft, AOD (15” Long) (8 Teeth Speed-O With 3 Governor Oil Holes) 1980-87	1	E8AZ-7060-A
76678DA	Output Shaft, AOD (15” Long) (8 Teeth Speed-O With 4 Governor Oil Holes) 1988-93	1	
76678DB	Output Shaft, AODE/4R70W (15” Long) (8 Teeth Speed-O With 2 Governor Oil Holes) 1992-03	1	
76678E	Output Shaft, AOD (15” Long) (7 Teeth Speed-O With 3 Governor Oil Holes) 1980-87	1	E2AZ-7060-A
76678EA	Output Shaft, AOD (15” Long) (7 Teeth Speed-O With 4 Governor Oil Holes) 1988-93	1	
76678EB	Output Shaft, AODE/4R70W (15” Long) (7 Teeth Speed-O With 2 Governor Oil Holes) 1992-03	1	
76678G	Output Shaft, AOD (15” Long) (9 Teeth Speed-O With 3 Governor Oil Holes) 1980-87	1	
76678GB	Output Shaft, 4R70W/4R75W/4R70E/4R75E 2WD (15” Long) (No Speed-O With 2 Oil Holes) 2004-Up (Can Use 76678DB Or 76678EB)	1	
76678H	Output Shaft, AOD 4x4 (11 1/2” Long) (With 3 Governor Oil Holes) 1980-87	1	
76678HA	Output Shaft, AOD 4x4 (11 1/2” Long) (With 4 Governor Oil Holes) 1988-93	1	
76678HB	Output Shaft, AODE/4R70W/4R75W/4R70E/4R75E 4x4 (11 1/2” Long) (With 2 Governor Oil Holes) 1992-08	1	
76678HC	Output Shaft, 4R75W (11 1/2” Long)(With 2 Oil Holes) 2009-Up (Has A Raised Area 3 3/8” From Splined End Of Shaft That Has 1.530”OD For A Tail Housing Seal)	1	
76680	Governor, AOD With Weight 1980-93	1	
T-1695	Tool, AOD Governor Bore Case Sleeve	1	
T-1695-SL	Replacement Sleeve, AOD Governor Bore Case (Use With T-1695)	1	
T-1695-SLE	Replacement Sleeve, AODE Governor Bore Case (Use With T-1695)	1	
76681K	High Rev Kit, AOD Governor Kit (Transgo) 1979-Up	1	
76681-3	Spring, AOD Governor 1980-93	1	
76691A	Sleeve, AODE Yoke (Rubber)	1	
76694	Retainer, AOD Intermediate Sprag (2 Square Tabs) 1980-92	1	F3AZ-7D191-A
76694A	Retainer, AODE/4R70W/4R75W/4R70E/4R75E Intermediate Sprag (2 Round Tabs) 1992-Up (With Snap Ring)	1	F3AZ-7D191-A
76740	Valve Body, AOD 1980-81 (Cast # RF-E0 & RF-E2)	1	
76740A	Valve Body, AOD 1982-88 (Cast # RF-E4)	1	
76740B	Valve Body, AOD 1989-93 (Cast # RFE9)	1	
76740C	Valve Body, AODE (Electronic) 1992 (Use 76740D)	1	F2VY-7A100-A
76740D	Valve Body, AODE (Electronic) (.225”OD Dowel Pins) 1992-95	1	
76740E	Valve Body, 4R70W (Electronic) (.163”OD Dowel Pins) 1996-97 (Cast # RFF6AP) Uses A Wire Harness	1	
76740EA	Valve Body, 4R70W (Electronic) (.163”OD Dowel Pins) 1998-00 (Cast # RFF6AP) Uses A Black Plastic Enclosed Circuit Board	1	
76740F	Valve Body, 4R70W/4R75W/4R70E/4R75E (W/Only 2 Round Backing Plates On Top Of Valve Body) (Cast # RF-1L3P-7A092- AA) 2001-Mid 08 (Uses A Black Plastic Enclosed Circuit Board) (With Superior “Super Tough Valve Body Plate”)	1	
76740G	Valve Body, 4R70W/4R75W/4R70E/4R75W (With Only 2 Round Backing Plates On Top Of Valve Body)(Cast # RF-1L3P-7A092-AA) Late 2008-Up (Uses A Wire Harness)(With Superior “Super Tough Valve Body Plate”)	1	

PART #	VALVE BODY COMPONENTS	QTY.	REFERENCE #
76741-3K	Spring Kit, AOD Throttle Valve Buzz Fix 1980-89	1	
76741-5	Check Ball, AOD/AODE Valve Body (.312” or 5/16”) (Viton) 1980-Up	1	E7DZ-7E195-A
76741-5K	Check Ball Kit, AOD/AODE (.312”)(5/16”)(Viton)(10 Per Pack)	1	
44741-5	Check Ball, AOD/AODE/4R70W Valve Body (.250” or 1/4”) (Steel) 1980-Up	7	
76741G-5	Check Ball, AOD/AODE Valve Body (.312” or 5/16”) (Torlon) 1980-Up	1	
44741V-5	Check Ball, AOD/AODE/4R70W/4R75W/4R70E/4R75E Valve Body (.250”) (Viton)	1	
S76741A-1A	Valve, AODE/4R70W/4R75W ByPass Clutch Control (Oversize)(Sonnax)(Must Use T-76948-TL6 Also)	1	

© Whatever It Takes Transmission Parts. Inc.

PART #	VALVE BODY COMPONENTS (Continued)	QTY.	REFERENCE #
T-76948-TL6	Reamer Set, For S76741A-1A	1	
S76741A-1K	Relief Valves, AOD (In Valve Body) (10 Per Kit) (Sonnax) 1980-93	1	10000-01K
S76741AK	Bypass Kit, AODE/4R70W/4R75W/4R70E/4R75E Bypass Clutch Control Sleeve & Plunger (Sonnax) 1993-Up	1	76948-04K
S76741B-1	TV Plunger, AOD (Oversized Where Plunger Exits The Valve Body Bore) (Uses With T-76970-RM Reamer) (Sonnax) 1980-93	1	76970
T-76970-RM	Reamer, AOD (TV Plunger Bore) (Use With S76741B-1) (Bores Only Where TV Plunger Exits The Valve Body) (Sonnax) 1980-93	1	76970-RM
S76741BBK	Sleeve Kit, AOD Throttle Valve Plug & Sleeve (Factory Style) (Sonnax) 1980-93	1	76989-03K
S76741BK	Sleeve Kit, AOD Throttle Valve Plug & Sleeve (Sleeve Uses 2 O-Rings) (Sonnax) 1980-93	1	76989K
S76741D-6	Plugs, AOD/AODE Valve Body End Plugs (Small) (3 Per Kit) (Sonnax) 1980-Up	1	76999-SML
S76741DK	Valve Kit, AOD 1-2 Capacity Modulator Valve (Oversize) (Contains: 1 Valve, 2 Springs, 2 O-Rings & 1 End Plug) (Sonnax) (Use With T-76991-TL Reamer) 1980-93	1	76991-01K
T-76991-TL	Reamer & Jig, AOD (Use With S76741DK) (1-2 Capacity Modulator Valve Kit) (Sonnax) 1980-93	1	76991-TL
S76741E-6	Plugs, AOD/AODE Valve Body End Plugs (Large) (3 Per Kit) (Sonnax) 1980-Up	1	76999-LRG
A44741G-5K	Check Ball Kit, AOD/AODE/4R70W/4R70E/4R75W/4R75E Valve Body (.250”OD, Torlon) (10 Per Pack)	1	
A76741GA-5	Check Ball, AOD/AODE Valve Body (.312”OD)(5/16”OD)(Steel)	AR	
A76741GA-5K	Check Ball Kit, AOD/AODE Valve Body (.312”OD)(5/16”OD)(Steel)	AR	
S76741LAK	Boost Valve & Sleeve, 4R70W/4R75W/4R70E/4R75E Overdrive Servo Regulator (Sonnax) 1995-Up	1	
S76741MOK	Manual Valve Kit, AODE/4R70W/4R75W (Oversize W/Retaining Clip)(Sonnax) (Must Use T-F-76948-TL46)	1	
T-F-76948-TL46	Oversize Reamer, For S76741MOK	1	
S76741P-1	Valve, AODE Main Pressure Regulator Prevents Low Line Pressure (Sonnax) 1992-95	1	76948-01
S76741P-3	Spring, AODE Pressure Regulator (Sonnax) (5 Per Set) 1992-95	1	
S76741P-7K	Line Pressure Booster Kit, AODE/4R70W/4R75W (Contains: Reverse Boost Valve, Sleeve, EPC Boost Valve, Plug, Retaining Ring & Pressure Regulator Spring)(Sonnax)	1	
S76741PA-1	Valve, 4R70W/4R75W/4R70E/4R75E Main Pressure Regulator 1996-Up (Sonnax)	1	76948-09
S76741PA-1K	Line Pressure Booster Kit, 4R70W/4R75W/4R70E/4R75E (Contains: Valve & Spring) (For Elevated Pressure Regulator) 1996-Up (Sonnax)	1	
S76741PCK	Sure Cure Kit, AODE 1992-95 (Sonnax)	1	SC-AODE
S76741PDK	Sure Cure Kit, 4R70W/ 4R75W/ 4R70E/ 4R75E (Sonnax) 1996-Up (When Out Sell S76741PD-ZK) Sonnax Disc. 12/16 Replaced By Zip Kit S76741PD-ZK	1	
S76741PD-ZK	Zip Kit, 4R70E/4R70W/4R75E/4R75W/AODE (Sonnax) 1996-Up	1	SC-AODE-1
S76741PEK	Valve Assembly, AODE/4R70W (Pressure Regulator) 1991-95 (Contains: Oversized Pressure Valve, Oversized Reverse Boost Valve & Sleeve) (Sonnax) (Must Use T-76948-TL4 Reamer Also)(Should Use T-76948-BST)	1	
S76741PFK	Valve Assembly, 4R70W/4R75W/4R70E/4R75E (Pressure Regulator) 1996-Up (Contains: Oversized Pressure Valve, Oversized Reverse Boost Valve Sleeve) (Sonnax) (Must Use T-76948-TL4 Reamer Also)(Should Use T-76948-BST)	1	
T-76948-TL4	Oversize REamer, For S76741PEK & S76741PFK (Sonnax)	1	
T-76948-BST	Bore Sizing Tool For S76741PEK & S76741PFK	1	
S76741PGK	Sure Cure Kit, 4R70E/4R70W/ 4R75W/AODE (Sonnax) 1996-Up	1	
A76741PK	Boost Valve & Sleeve, AODE/4R70W/4R75W/4R70E/4R75E (Steel Boost Valve & Sleeve) (Superior) 1992-Up	1	K026
S76741PK	Boost Valve & Sleeve, AODE/4R70W/4R75W/4R70E/4R75E (Pressure Regulator Prevents Poor Reverse Boost) 1992-Up	1	76948-02K
T76741PK	Valve Kit, AODE/4R70W Boost Valve (Drop-in, Stock Replacement) TransGo	1	
S76741S-6	Plugs, AOD/AODE Valve Body End Plugs (Medium) (3 Per Kit) (Sonnax) 1980-Up	1	76999-MED
S76741S-6K	End Plug Kit, AOD/AODE Valve Body (3 Medium, 1 Small Plug & 8 Small O-Rings) 1980-E83 (Sonnax)	1	76999-04K
S76741SK	Shift Valve & Sleeve Assembly, AODE 3/4 Shift With End Plugs (Sonnax)	1	76999-05K
S76741SBK	Valve & Spring Kit, AODE/4R70W/4R75W/4R70E/4R75E (Solenoid Regulator Valve)(Contains: Valve, Spring, End Plug & O-Rings) (Sonnax)(Should Use T-76948-BST2)	1	
S76741SOK	Solenoid Regulator Valve Kit, 4R70E/4R70W/4R75W/4R75W/AODE (Oversized)(Contains: Valve & Spring)(Sonnax) (Requires TF-76948-TL47)	1	
T-F-76948-TL47	(For S76741SOK)	1	
S76741TAK	Boost Valve Kit, AOD Pressure Regulator (Factory Style) 1980-93 (Sonnax)	1	76990-03K
A76741TBK	Boost Valve & Sleeve, AOD Reverse (Superior)	1	
S76741TBK	Boost Valve Kit, AOD Pressure Regulator (Factory Style) (Large Ratio) 1980-93 (Sonnax)	1	76990-04K
S76741TK	Boost Valve Kit, AOD Pressure Regulator (With O-Rings) (Uses O-Rings On Sleeve) 1980-93 (Sonnax)	1	76990K
S76741VK	Valve & Spring Kit, AODE/4R70W/4R75W/4R70E/4R75E (Solenoid Regulator Valve)(Contains: Valve, Spring, End Plug O-Rings)(Sonnax) (Should Use T-76948-BST2)	1	
T-76948-BST2	Reamer, AODE/4R70W/4R75W/4R70E/4R75E (For S76741VK)	1	

FORD

© Whatever It Takes Transmission Parts. Inc.

S76746-4K.....Capsule, AODE/4R70W/4R75W EPC Limit (Goes Into The Valve Body Cover Plate)(Sonnax)
.....(Limits EPC Pressure To 80 PSI)(Must Use Tool # T-76948-TL32) .....1 .....
T-76948-TL32.Tool For S76746-4K .....1 .....
76747GA.....Plate, 4R70W/4R75W/4R70E/4R75E Valve Body Seperator L2000-Up (Superior “Super Tough
.....Plate”)(Fits Plate With .092” 1-2 Feed Holes) .....1 .....
76747GB .....Plate, 4R70W/4R75W/4R70E/4R75E Valve Body Seperator 2008-Up (Superior “Super Tough
.....Plate”)(Fits Plate With .073” 1-2 Feed Holes)
76748E-6 .....Reinforcing Plate, AODE (Large Middle One) Holds Valve Body Seperator On 1992-94 (W/Bolts)
.....(OE Fix For Damaged Forward Clutches).....1 .....F4AZ-7F282-A
S76748EA-6K.Reinforcing Plate Kit, 4R70W/4R75W (Small One) Holds Valve Body Seperator On 2001-Up
.....(Sonnax)(Contains: Plate, Gasket, 2 Bolts) .....1 .....

PART #	HARD PARTS (Continued)	QTY.	REFERENCE #
76843	Bracket, AODE/4R70W EPC Solenoid 1992-97	1	F3AZ-7H111-A
76843A	Bracket, AODE/4R70W EPC Solenoid 1998-Up	1	F6AZ-7H111-A
76760	Case, AOD (Early, Small Cooler Line Fittings) (11/16”) (Cast # RFE0)	1	
76760A	Case, AOD (Late, Large Cooler Line Fittings) (3/4”) (Cast # RFE3 Or RFE9)	1	
76760B	Case, AODE (2 Bolt Starter) (Cast # RFF4) (.225”OD Valve Body Dowel Pins) 1994-6/96	1	
76760BB	Case, AODE (3 Bolt Starter) (Cast # RFF2 Or RFF4-AA) (.225”OD Valve Body Dowel Pins) 1992-93	1	
76760BC	Case, AODE (3 Bolt Starter) (Cast # RFF4-AC) (.225”OD Valve Body Dowel Pins) 1994-95	1	
76760D	Case, 4R70W (3 Bolt Starter) (Cast # RFF7) (.163”OD Valve Body Dowel Pins) (With Output Sensor Hole) 1996-03	1	
76760E	Case, 4R70W (2 Bolt Starter) (Cast # RFF7) (.163”OD Valve Body Dowel Pins) (With Output Speed Sensor Hole) 6/96-2003	1	
76760H	Case, 4R70W/4R70E (2 Bolt Starter) (Cast # RF3L3P) 2004-Up (With Turbine Shaft & Output Speed Sensor Holes)	1	

PART #	CASE COMPONENTS	QTY.	REFERENCE #
76760HA	Case, 4R75W/4R75E (3 Bolt Starter) (Cast # RF3L3P or RF6C2P) 2004-Up (With Turbine Shaft & Output Speed Sensor Holes)	1	
S56761-2CK	Sleeve, AOD/AODE/4R70W Shift Linkage Shaft (With 1 Sleeve, 1 3mm Pin & 1 .125” Pin) Use W/T-56361-TL	1	56361-01K
T-76761A-6	Alignment Pin Adapters, 4R70W Valve Body To Case (Teckpak) Allows The Use Of Late Model Valve Bodies On Early Units	1	
T-SERVO-FIX	Servo Pin Bore Reaming Fixture, AOD/AODE/4R70W/4R75W/4R70E/4R75E (Sonnax)	1	
T-56361-TL	Tool Kit, AOD/AODE/4R70W For S56761-2CK	1	56361-TL
T-TK56RTD	Tool Kit, AOD/AODE/4R70W Shift Linkage Pin Remover & Installer (Teckpak)	1	

PART #	HARD PARTS (Continued)	QTY.	REFERENCE #
76765	Pan, AOD 2WD 1980-93	1	
76765A	Pan, AODE/4R70W/4R75W/4R70E/4R75E 2WD 1992-95	1	
76765AA	Pan, AOD 4x4 1980-93	1	
76765B	Pan, AODE/4R70W/4R75W/4R70E/4R75E 4x4 1992-Up	1	
76770	Extension Housing, AOD/AODE 2WD (10 1/2”) Small Seal 1980-92	1	
76770A	Extension Housing, AOD/AODE 2WD (11 1/2”) Small Seal 1980-92	1	
76770B	Extension Housing, AOD/AODE 4x4 (6 3/8”) Aluminum W/2 Threaded Bosses For Shifter (Cast # RF-F67P-7A040-AA)	1	
76770BA	Extension Housing, AOD/AODE 4x4 (6 3/8”) Aluminum W/1 Threaded Boss For Shifter	1	
76770BC	Extension Housing, AODE/4R70W 4x4 (6 3/8” Long) Aluminum W/2 Threaded Bosses For Shifter (Cast # RF-F2TP-7A040-BA or RF-3L3P-7A040-AB)	1	
76770BD	Extension Housing, 4R75W 4x4 (3 3/4” Long)(Cast #RF9L3P-7A040CB) 2009-Up	1	
76770C	Extension Housing, AODE/4R70W 2WD (10 1/2” Long) Large Seal (With Speed-O Hole) 1993-03	1	
76770D	Extension Housing, AODE/4R70W 2WD (11 1/2”) Large Seal 1993-03	1	
76770H	Extension Housing, 4R70W/4R75W/4R70E/4R75E 2WD (10 1/2”) 2004-Up (No Speed-O Hole)	1	
76770HA	Extension Housing, 4R70W/4R75W/4R70E/4R75E 2WD (11 1/2” Long) 2004-Up (No Speed-O Hole)(Large Seal)	1	
76770HB	Extension Housing, 4R70W/4R75W/4R70E/4R75E 2WD (10 1/2” Long)(Cast # RF9L3P) (With 4 Bolt Bottom Mount) 2009-Up	1	
76774	Housing, AOD Driven Speed-O (Cable Driven) 1980-93	1	
86774B	Speed-O Housing, AOD/AODE/4R70W (With 2 Pin Connector)(.871”OD Housing Below O-Ring) (Less Speed-O Driven Gear)(Does Not Use A Cable)	1	
86774C	Speed-O Housing, AOD/AODE (With 2 Pin Connector)(.871”OD Housing Below O-Ring)(Less Speed-O Driven Gaer)(Uses A Cable)	1	
26775	Converter Nut, AOD/AODE Flange Type (Standard Thread)	1	
26775A	Converter Nut, AOD/AODE Self Locking (Standard Thread)	1	
76777K	Bolt Set, AOD/AODE/4R70W/4R75W/4R70E/4R75E Pump To Case (7 Pieces) 1980-Up	1	

© Whatever It Takes Transmission Parts. Inc.

PART #	HARD PARTS (Continued)	QTY.	REFERENCE #
76778K	Bolt Set, AOD/AODE/4R70W/4R75W/4R70E/4R75E Stator To Pump Body (7 Pieces) 1980-Up	1	
76779AK	Bolt Set, AODE/4R70W/4R75W/4R70E/4R75E Bottom Pan (14 Bolts) 1992-Up	1	
76781K	Bolt Set, AOD/AODE/4R70W/4R75W/4R70E/4R75E Extension Housing To Case 2WD (6 Pieces) 1980-Up	1	
76781AK	Bolt Set, AOD/AODE/4R70W/4R75W/4R70E/4R75E Extension Housing To Case 4x4 (6 Pieces) 1980-Up	1	
76782K	Bolt Set, AOD/AODE/4R70W/4R75W/4R70E/4R75E Valve Body To Case (25 Pieces) 1980-Up	1	
44839	Pan Magnet, AOD/AODE/4R70W Rectangular	1	
44839A	Pan Magnet, AOD/AODE/4R70W Round	1	
76843	Bracket, AODE/4R70W EPC Solenoid 1992-97	1	F3AZ-7H111-A
76843A	Bracket, 4R70W/4R75W/4R70E/4R75E EPC Solenoid 1998-Up	1	
76848	Gear, AOD Driven Speed-O (17 Teeth)	1	
76848A	Gear, AOD Driven Speed-O (18 Teeth)	1	
76848AA	Gear, AOD Driven Speed-O (19 Teeth)	1	
76848AB	Gear, AOD Driven Speed-O (20 Teeth)	1	
76848AC	Gear, AOD Driven Speed-O (21 Teeth)	1	
76853	Cushion, AOD Forward Clutch (For Cast Iron Drum) 1980-90	1	
76853A	Cushion, AOD/AODE/4R70W/4R75W/4R70E/4R75E Forward Clutch (.070") Steel Drum 1989-Up	1	
76853B	Cushion, AOD/AODE/4R70W/4R75W/4R70E/4R75E Forward Clutch (.034") Steel Drum 1989-Up	1	F0SZ-7E085-A
76853C	Cushion, AOD/AODE/4R70W/4R75W/4R70E/4R75E Forward Clutch (.083") Steel Drum 1989-Up	1	
76874	Snap Ring, AOD/AODE/4R70W/4R75W/4R70E/4R75E Holds Intermediate Sprag Retainer To Reverse Drum (.043") 1980-Up	1	391267-S
76874A	Snap Ring, AOD/AODE Holds Intermediate Sprag Retainer To Reverse Drum (Spiral, Updated)	1	11501326
S76874AK	Snap Ring Kit, AOD/AODE Holds Intermediate Sprag Retainer To Reverse Drum (Spiral Snap Ring & Snap Ring Lock) (3 Per Pack) (Sonnax)	1	76554RK
76876A	Snap Ring, AOD/AODE/4R70W/4R75W/4R70E/4R75E Forward & Reverse Clutch (.064") (5.570"OD) 1980-Up	1	C8AZ-7D483-C
76876C	Snap Ring, AOD/AODE/4R70W/4R75W/4R70E/4R75E Forward & Reverse Clutch (.078") 1980-Up	1	C7AZ-7D483-A
76876CA	Snap Ring, AOD/AODE/4R70W/4R75W/4R70E/4R75E Forward & Reverse Clutch (.084") 1980-Up	1	
76876D	Snap Ring, AOD/AODE/4R70W/4R75W/4R70E/4R75E Forward & Reverse Clutch (.092") 1980-Up	1	C8AZ-7D483-C
76876E	Snap Ring, AOD/AODE/4R70W/4R75W/4R70E/4R75E Forward & Reverse Clutch (.106") 1980-Up	1	C8AZ-7D483-A
76877	Snap Ring, AOD/AODE/4R70W/4R75W/4R70E/4R75E Holds Forward Clutch Retainer In Drum 1980-Up	1	388099-S
76878EA	Snap Ring, AODE/4R70W/4R75W/4R70E/4R75E Direct Clutch (.052") 1992-Up	1	F3AZ-7D483-A
76878EB	Snap Ring, AODE/4R70W/4R75W/4R70E/4R75E Direct Clutch (.068") 1992-Up	1	F3AZ-7D483-B
76878EC	Snap Ring, AODE/4R70W/4R75W/4R70E/4R75E Direct Clutch (.082") 1992-Up	1	F3AZ-7D483-C
76878ED	Snap Ring, AODE/4R70W/4R75W/4R70E/4R75E Direct Clutch (.096") 1992-Up	1	F3AZ-7D483-D
76879	Snap Ring, AOD/AODE/4R70W/4R75W/4R70E/4R75E Holds Direct Retainer In Drum 1980-Up	1	388104-S2
S76880	Retaining Ring, AOD (Shaft To Direct Drum) (5 Per Kit) (Sonnax) (Prevents Direct Drive Shaft From Contacting Output Shaft) 1980-93	1	76811-01K
76883	Snap Ring, AOD/AODE/4R70W Holds Center Support To Case (Has 2 Hooks At Each End) 1980-02	1	388501-S
76883H	Snap Ring, 4R70W/4R75W/4R70E/4R75E Holds Center Support To Case (Has 1 Hook At The End) 2003-Up	1	
76884	Snap RIng, AOD/AODE/4R70W Sets In Case For Rear Band To Rest On (.058" Thick) (6.555"OD) 2013-16	1	
76889	Snap Ring, AOD Holds Ring Gear Hub (Flat) 1980-93	1	
76889E	Snap Ring, AODE/4R70W/4R75W/4R70E/4R75E Holds Ring Gear To Hub (.060" Thick) (Wavy) 1992-Up	1	
76893	Snap Ring, AOD/AODE/4R70W/4R75W/4R70E/4R75E Holds Reverse Clutch Return Spring In Drum 1980-Up	1	E0AZ-7A577-A
76894	Snap Ring, AOD/AODE/4R70W/4R75W/4R70E/4R75E Holds Ring Gear Hub To Output Shaft (.062" Thick) (1.950"OD) 1980-Up	1	97713-S
76895	Snap Ring, AODE/4R70W/4R75W/4R70E/4R75W Holds # 691 Sleeve To Output Shaft 1992-Up	1	
76896	Snap Ring, AOD Holds Reverse Servo In Case 1980-93	1	38815-S
76896E	Snap Ring, AODE/4R70W/4R75W/4R70E/4R75E Holds Reverse Servo In Case 1992-Up	1	
76897	Snap Ring, AOD Holds Overdrive Servo In Case 1980-93	1	388216-S
76897E	Snap Ring, AODE/4R70W/4R75W/4R70E/4R75E Holds Overdrive Servo In Case 1992-Up	1	F2VY-7384-B
76898	Snap Ring, AOD Holds 2-3 Accumulator In Case 1980-93	1	97631-S

FORD

© Whatever It Takes Transmission Parts. Inc.

76898E	Snap Ring, AODE/4R70W/4R75W/4R70E/4R75E Holds 2-3 & 1-2 Accumulator In Case (.077" Thick) (2.230"OD) 1992-Up	2	F2VY-7384-A
76899	Snap Ring, AOD Holds 3-4 Accumulator In Case 1980-93	1	97626-S
76900	Servo Assembly, AOD Overdrive (V-8 302) (W/Letter C) 1980-93	1	E0AZ-7F200-B
76900A	Servo Assembly, AOD Overdrive (V-8 351) (W/Letter B) 1980-93	1	
76900ASK	Servo Assy, AODE/4R70W O.Dr. Servo (Superior Super Servo) (Retaining Ring, E-Clip, "Jimmy" Tool, And Pin)	1	
76900B	Servo Assembly, AOD Overdrive (V-6) 1980-93	1	
76900E	Servo Assembly, AODE/4R70W (Use U76900H)	1	
76900EA	Servo Assembly, AODE/4R70W Overdrive Servo (2.500"OD) (Bonded) 1993-98	1	
76900H	Servo Assembly, AODE/4R70W/4R75W/4R70E/4R75E Overdrive Servo (2.725"OD) (Bonded) 1992-Up	1	
76900SK	Servo Assembly, AOD Overdrive Servo (Superior Super Servo) (2.874"OD) (Cover, Piston, Pin, Spring & O-Rings) 1980-93 (Superior)	1	
76901	Spring, AOD Overdrive Servo (Green) 1980-93	1	
76901A	Spring, AOD Overdrive Servo (White) 1980-93	1	
76901E	Spring, AODE Overdrive Servo 1992	1	
76901EA	Spring, AODE/4R70W Overdrive Servo (Yellow) (2.080" Long) 1993-03	1	F2VY-7F201-A
76901H	Spring, 4R70W/4R75W/4R70E/4R75E Overdrive Servo (Green) (2.235" Long) 2004-Up	1	
76902	Piston, AOD Overdrive Servo (V-8 302) (Stamped "C") (2.183"OD) 1980-93	1	E0AZ-7F200-A
76902A	Piston, AOD Overdrive Servo (V-8 351) (Stamped "B") (2.490"OD) 1980-93	1	E0AZ-7F200-B
76902B	Piston, AOD Overdrive Servo (V-6) (Stamped "A") (2.675"OD) 1980-93	1	E9SZ-7F200-A
76902EA	Piston, AODE/4R70W Overdrive Servo (Bonded Rubber W/Sleeve) (2.500"ID Sleeve Bore) (2.470"OD Of Piston Not Including The Bonded Rubber Lip) 1993-98	1	F7AZ-7H188-AA
76902ESK	Piston Set, AODE/4R70W (Overdrive Servo)(Superior Super Servo)(Contains: Aluminum Piston, Teflon Seal & Lip Seal) 1992-03	1	
76902H	Piston, 4R70W/4R75W/4R70E/4R75E Overdrive Servo (Bonded) (2.700"ID Of Servo Bore) (2.680"OD Of Piston Not Including The Bonded Lip) 1992-Up	1	
76902HP	Piston, 4R70W/4R75W/4R70E/4R75E Overdrive Servo (Bonded)	1	
S76903	Pin, AODE/4R70W Overdrive Servo (1 Pin, 2 O-Rings, 1 Washer) 1992-Up (Sonnax)	1	76833E
S76903-2	Sleeve, AODE/4R70W Overdrive Servo Pin Bore Sleeve (Sonnax)(Must Use Tool T-S-76890-TL24)		
T-S-76890-TL24	Bore Tool For S76903-2	1	
S76903ADJ	Pin, AODE/4R70E/4R70W/4R75E/4R75W Overdrive Servo (Adjustable)(With Jimmy Clip) (Superior)	1	
S76903G	Pin, AOD Overdrive Servo (1 Pin, 1 O-Ring, 1 Washer) (Sonnax)	1	76833
76904	Cover, AOD Overdrive Servo (V-8 302) 1980-93	1	
76904A	Cover, AOD Overdrive Servo (V-8 351) 1980-93	1	E0AZ-7D027-D
76904B	Cover, AOD Overdrive Servo (V-6) 1980-93	1	
76904E	Sleeve, AODE/4R70E Overdrive Servo (2.680"ID) 1992-03	1	
76904EA	Sleeve, AODE/4R70W Overdrive Servo (2.500"ID) 1993-98	1	
76904H	Sleeve, 4R70W/4R75W/4R70E/4R75E Overdrive Servo (2.725"ID) 2004-Up	1	
76911	Spring, AOD/AODE/4R70W/4R75W/4R70E/4R75E Reverse Servo 1980-Up	1	E0AZ-7D031-B
76912	Piston, AOD/AODE/4R70W/4R75W/4R70E/4R75E Reverse Servo (1 Groove) 1980-Up	1	E0AZ-7D189-A
76912A	Piston, AOD/AODE/4R70W/4R75W/4R70E/4R75E Reverse Servo (2 Groove) 1980-Up	1	E0AZ-7D189-B
76912AHP	Piston, AOD/AODE/4R70W/4R75W/4R70E/4R75E Reverse Servo (2 Groove) 1980-Up	1	
76912B	Piston, AOD/AODE/4R70W/4R75W/4R70E/4R75E Reverse Servo (3 Groove) 1980-Up	1	E0AZ-7D189-C
76912BHP	Piston, AOD/AODE/4R70W/4R75W/4R70E/4R75E Reverse Servo (3 Groove) 1980-Up	1	
76914	Cover, AOD/AODE/4R70W/4R75W/4R70E/4R75E Reverse Servo 1980-Up	1	E0AZ-7D036-A
76914HP	Cover, AOD/AODE/4R70W/4R75W/4R70E/4R75E Reverse Servo 1980-Up (Hi-Per Blue)	1	
76925E	Accumulator Assembly, AODE 1-2 Accumulator 1992-Up (O-Ring Type) 1992-95	1	
76925EA	Accumulator Assembly, AODE/4R70W 1-2 Accumulator (Bonded Rubber) 1994-03	1	
S76925EK	Sleeve Kit, AODE 1-2 Accumulator (Piston, Sleeves, Cover & O-Rings) (Sonnax) (Uses Installation Tool # T-76890-TL) 1992-Up	1	76890-01K
T-76890-TL	Installation Tool For S76925EK	1	76890-TL
76925H	Accumulator Assembly, 4R70W/4R75W/4R70E/4R75E 1-2 Accumulator (Bonded Rubber) (With 3 Springs) 2004-Up	1	
76926A	Spring, AODE 1-2 Accumulator (Pink) 1992-95	1	
76926AA	Spring, AODE 1-2 Accumulator (Green) 1992-95	1	
76926B	Spring, AODE/4R70W/4R75W/4R70E/4R75E 1-2 Accumulator (Violet) 1992-Up	1	
76926E	Spring, AODE/4R70W/4R75W/4R70E/4R75E 1-2 Accumulator (Purple) (Hi Performance) 1992-Up	1	F3LY-7F284-A
76926G	Spring, 4R70W/4R75W/4R70E/4R75E 1-2 Accumulator (Yellow) 1995-Up	1	
76926H	Spring, 4R70W/4R75W/4R70E/4R75E 1-2 Accumulator (Blue) 2004-Up (This Spring Is Inside Of The 76926 Spring)	1	
S76926K	Spring Set, AODE 1-2 Accumulator (Medium) (10 Per Pack) 1980-93 (Sonnax)	1	76948-08
76927A	Piston, AODE 1-2 Accumulator 1992-95 (Aluminum, O-Ring Type)	1	
76927B	Piston, AODE/4R70W/4R75W/4R70E/4R75E 1-2 Accumulator (Bonded Rubber) 1994-Up	1	F7AZ-7F251-AA
76929A	Cover, AODE/4R70W/4R75W/4R70E/4R75E 1-2 Accumulator (Bonded Rubber) 1994-Up	1	F4AZ-7F247-A
76930	Accumulator Assembly, AOD 2-3 Accumulator 1980-93	1	

© Whatever It Takes Transmission Parts. Inc.

PART #	HARD PARTS (Continued)	QTY.	REFERENCE #
76930E	Accumulator Assembly, AODE/4R70W 2-3 Accumulator 1992-96	1	
76930EA	Accumulator Assembly, 4R70W 2-3 Accumulator 1997-00 (Bonded Rubber) Overall Height Of The Cover Is .496")	1	
76930H	Accumulator Assembly, 4R70W/4R75W/4R70E/4R75E 2-3 Accumulator (Bonded Rubber) 2001-Up (Overall Height Of The Cover Is .586")	1	
76931	Spring, AOD/AODE/4R70W 2-3 Accumulator (1.880" Long) 1980-03	1	E0AZ-7F285-A
76931H	Spring, 4R70W/4R75W/4R70E/4R75E 2-3 Accumulator 2004-Up (1.745" Long)	1	
76932	Piston, AOD 2-3 Accumulator 1980-93	1	E0AZ-7F251-A
S76932K	Piston Kit, AOD/AODE/4R70W 2-3 Accumulator 1980-96 (Sonnax) (Contains: 2 Sleeves, 1 Piston & 2 D-Rings)	1	
76932E	Piston, AODE/4R70W/4R75W/4R70E/4R75E 2-3 Accumulator 1992-Up (4 Ring Shorty Style)	1	
76932EA	Piston, AODE/4R70W/4R75W/4R70E/4R75E 2-3 Accumulator (Bonded Rubber) 1997-Up	1	F7AZ-7H292-AB
76934	Cover, AOD 2-3 Accumulator 1980-93	1	E0AZ-7B264-A
76934E	Cover, AODE/4R70W 2-3 Accumulator 1992-96	1	F2AZ-7B264-A
76934EA	Cover, 4R70W 2-3 Accumulator (.496" Overall Height) 1997-00	1	
76934H	Cover, 4R70W/4R75W/4R70E/4R75E 2-3 Accumulator (.585" Overall Height) 2001-Up	1	
76935	Accumulator Assembly, AOD 3-4 Accumulator 1980-81	1	
76935A	Accumulator Assembly, AOD 3-4 Accumulator 1982-88	1	
76935B	Accumulator Assembly, AOD 3-4 Accumulator 1989-93	1	E0AZ-7F288-A
76936	Spring, AOD 3-4 Accumulator 1980-88	1	E0AZ-7F285-A
76936A	Spring, AOD 3-4 Accumulator 1989-93	1	F3LY-7F284-A
76937	Piston, AOD 3-4 Accumulator 1980-81	1	E0AZ-7F287-A
76937A	Piston, AOD 3-4 Accumulator 1982-88	1	E2AZ-7F287-A
76937B	Piston, AOD 3-4 Accumulator 1989-93	1	E2AZ-7F287-A
76939	Cover, AOD 3-4 Accumulator 1980-81	1	E0AZ-7F247-A
76939A	Cover, AOD 3-4 Accumulator 1982-88	1	E2AZ-7F247-A
76939B	Cover, AOD 3-4 Accumulator 1989-93	1	
76962	Piston, AOD/AODE/4R70W Intermediate Clutch (Aluminum) 1980-03	1	F2AZ-7E005-A
76962H	Piston, 4R70W/4R75W/4R70E/4R75E Intermediate Clutch (Bonded) 2004-Up	1	
76964	Piston, AOD Forward Clutch (W/Cast Iron Drum) 1980-93	1	E0AZ-7A262-A
76964E	Piston, AOD/AODE/4R70W/4R75W/4R70E/4R75E Forward Clutch (W/Stamped Steel Drum) 1989-Up	1	
76965	Piston, AOD Direct Clutch (Cast Iron Drum) (Can Use 76965A) (Check Ball Is Staked Into Piston, No Metal Retainer) 1980-93	1	
76965A	Piston, AOD Direct Clutch (Cast Iron Drum) (Has A Metal Check Ball Retainer) 1980-93	1	
76965E	Piston, AOD/AODE/4R70W/4R75W/4R70E/4R75E Direct Clutch (Stamped Steel Drum) 1989-Up	1	F2VY-7A262-A
76966	Piston, AOD Reverse Clutch 1980-93	1	E0AZ-7D402-A
76966E	Piston, AODE/4R70W/4R75W/4R70E/4R75E Reverse Clutch 1992-Up	1	F2TZ-7D402-A
76972	Retainer With Springs, AOD Intermediate Clutch 1980-93	1	E0AZ-7F222-A
76972E	Retainer With Springs, AODE/4R70W Intermediate Clutch 1992-03 (With 9 Springs)	1	
76972H	Retainer, 4R70W/4R75W/4R70E/4R75E Intermediate Clutch Spring (24 Springs)(Single Cage) 2004-07	1	
76972HA	Retainer W/Spring, 4R70W/4R75W/4R70E/4R75E Intermediate Clutch 2007-Up (With 24 Springs)	1	
76974	Spring, AOD/AODE/4R70W/4R75W/4R70E/4R75E Forward Clutch Return 1980-Up	1	E0AZ-7A480-A
76975	Retainer With Springs, AOD/AODE/4R70W/4R75W/4R70E/4R75E Direct Clutch Return 1980-Up	1	E5AZ-7F235-A
76976	Spring, AOD/AODE/4R70W/4R75W/4R70E/4R75E Reverse Clutch Return 1980-Up	1	E0AZ-7B070-A
76982H	Cushion, 4R70W/4R75W/4R70E/4R75E Intermediate Clutch (Waved)(.085" Thick) (7 3/4"OD) 2004-07	1	
76982HS	Cushion Seat, 4R70W/4R75W/ 4R70E/4R75E Intermediate Clutch (Stepped)(7 3/4"OD) (.100/.315"Thick) 2004-07	1	
76984	Retainer, AOD/AODE/4R70W/4R75W/4R70E/4R75E Forward Clutch Spring 1980-Up	1	E0AZ-7A527-A
76991	Linkage Assembly, AOD Internal 1980-93	1	
76991E	Linkage Assembly, AODE/4R70W/4R75W/4R70E/4R75E Internal 1992-Up	1	
T-TK56RTD	Tool Kit, AOD/AODE/4R70W Shift Linkage Pin Remover & Installer (Teckpak)	1	
76992	Shift Lever, AOD/AODE External (Cast # E4ZP AA) 1983-93	1	E4ZZ-7A256-A
76992A	Shift Lever, AOD External (Cast # E0AP) 1980-Up	1	E0AZ-7A256-A
76992AA	Shift Lever, AOD External (Cast # E0WP BB) 1980-Up	1	E0WY-7A256-A
76992AB	Shift Lever, AOD External (Cast # E1TP AA) 1980-Up	1	E1TZ-7A256-A
73992AC	Shift Lever, AOD External (Cast # E9SP BA) (Floor Shift, 1991 T-Bird)	1	E9SZ-7A256-A
76992AD	Shift Lever, AOD External (Cast # E9SP BA) 1988-93	1	F2UZ-7A256-A
76992AE	Shift Lever, AODE/4R70W/4R75W/4R70E/4R75E External (Cast # F4SP AA) 1992-Up	1	
76992AF	Shift Lever, AODE/4R70W/4R75W/4R70E/4R75E External (Cast # F4AP AA) 1992-Up	1	
76992B	Shift Lever, AODE/4R70W/4R75W/4R70E/4R75E External (Cast # F75P) 1992-Up	1	
76992BA	Shift Lever, AODE/4R70W/4R75W/4R70E/4R75E External (Cast # F7AP AA) 1992-Up	1	

FORD

© Whatever It Takes Transmission Parts. Inc.

76992BB-1.....Lever, AODE/4R70W/4R75W/4R70E/4R75E External (Without Shaft)(3.680” Long, Offset)
.....(Cast # F7 Or F75)(Some 1994-Up) .....1 .....
76992BC-1 .....Lever, AODE/4R70W/4R75W/4R70E/4R75E External (Without Shaft)(3.670” Long, Straight)
.....(Cast # F3UP-7A253-A)(Some 1994-Up) .....1 .....
76995.....Park Pawl Assembly, AOD 1980-E84.....1 .....
76995A .....Park Pawl Assembly, AOD/AODE/4R70W/4R75W/4R70E/4R75E L1984-Up .....1 .....
T76996 .....Fitting, AOD/AODE/4R70W Cooler (Screw In) (1/4” Pipe Thread) Pipe Thread Screws In To
.....Case (For A 5/16” Push-In Cooler Line).....1 .....FS-190
T86996 .....Fitting, AODE/4R70W Cooler Line (Push-In) (1/4” Pipe Thread, 5/16” Line) Metal Clip Type .....1 .....
56996A .....Fitting, AOD/AODE/4R70W Cooler (16.5mm Thread Screw-In To Case) (For A 3/8” Screw-In
.....Cooler Line) (Uses A 22mm Wrench).....1 .....
T76996A.....Fitting, AOD/AODE/4R70W Cooler (16.5mm Thread Screw-In Thread Screws In To The Case)
.....For A 5/16” Push-In Cooler Line.....1 .....
T86996C.....Clip, AODE/4R70W Cooler Line Retainer (Metal) (For T86996)(Teckpak) .....1 .....

© Whatever It Takes Transmission Parts. Inc.

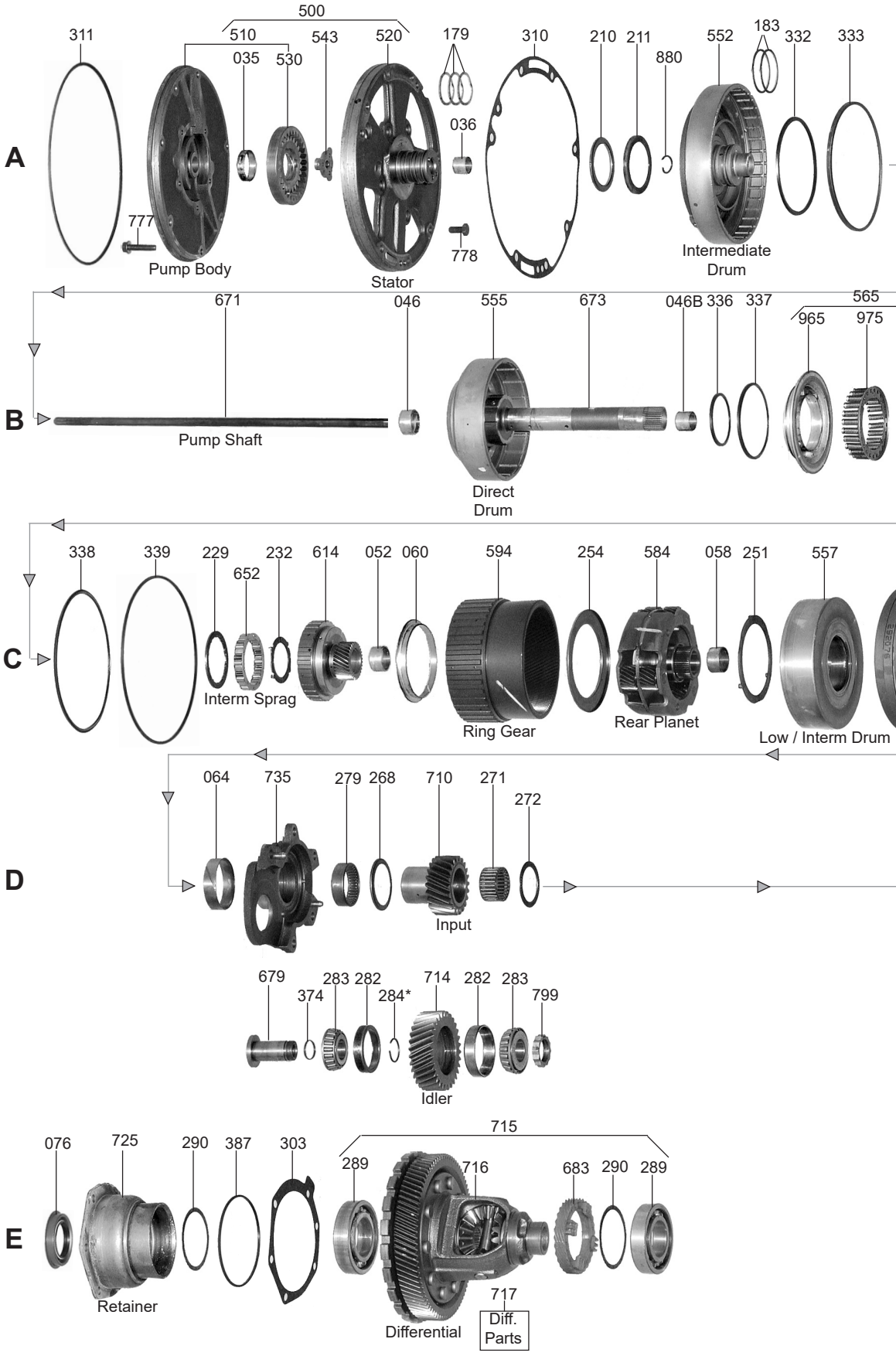

000 P&R Kit
002 OHK Kit
004 Master L/Steels Kit
006 Master W/Steels Kit
011 Filter Kit
030 Bushing Kit
119 Friction Module
139 Steel Module
165 V.B. Kit
175 Ring Kit
200 Washer Kit
201 Bearing Kit
390 External Seal Kit
400 Tech Manual

FORD

© Whatever It Takes Transmission Parts. Inc.

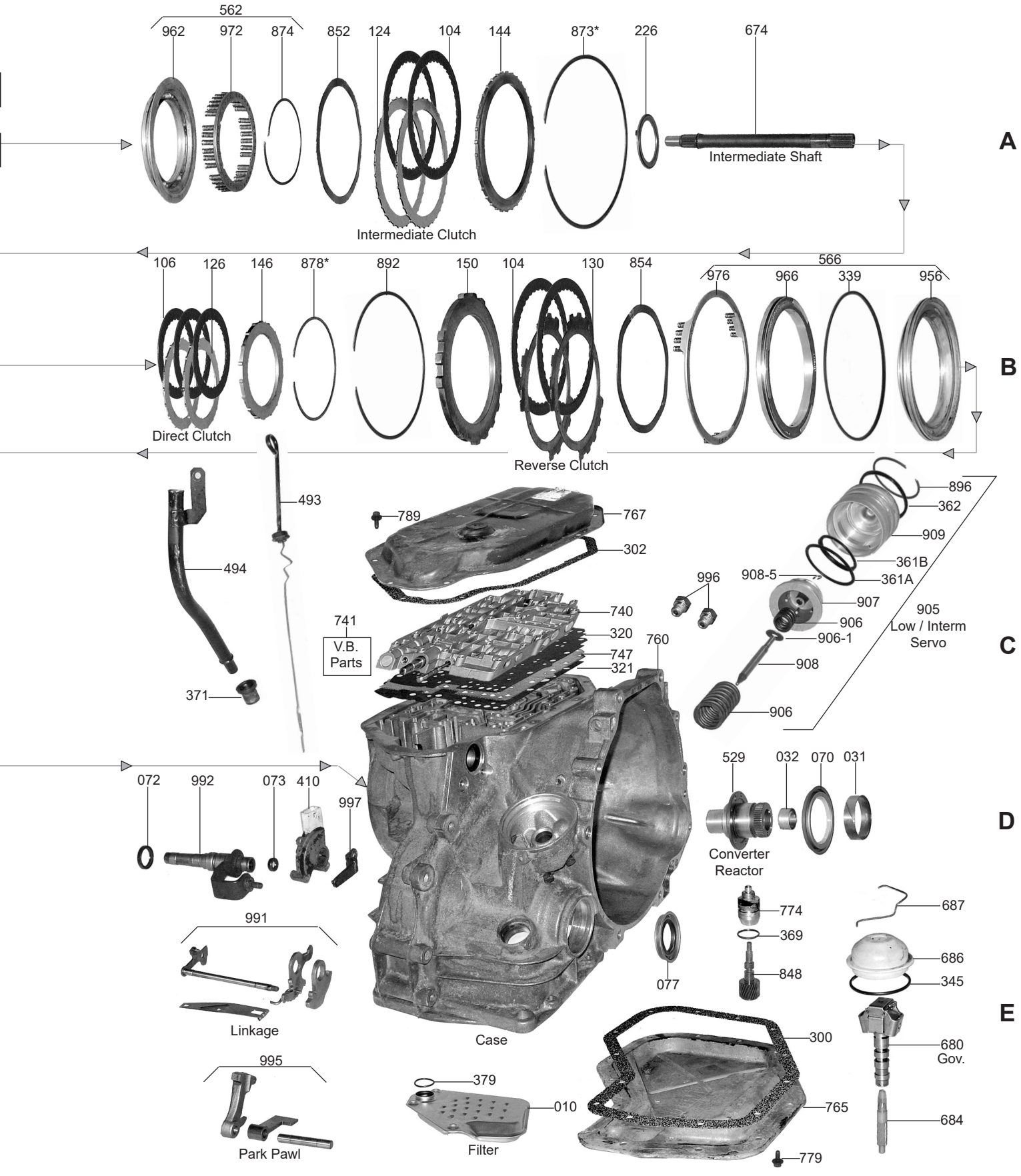

FORD

© Whatever It Takes Transmission Parts. Inc.

PART #	PAPER & RUBBER KIT	QTY.	REFERENCE #
66000	Paper & Rubber Kit, ATX 1981-Up	1	

PART #	OVERHAUL KITS	QTY.	REFERENCE #
66002	Overhaul Kit, ATX 1981-Up	1	

PART #	MASTER L/STEEL KIT	QTY.	REFERENCE #
66004	Master L/Steels Kit, ATX 1981-91	1	
66004A	Master L/Steels Kit, ATX 1992-Up	1	

PART #	MASTER W/STEEL KIT	QTY.	REFERENCE #
66006	Master W/Steels Kit, ATX 1981-91	1	
66006A	Master W/Steels Kit, ATX 1992-Up	1	

PART #	FILTER	QTY.	REFERENCE #
66010	Filter, ATX 1981-Up	1	E9FZ-7A098-A

PART #	FILTER KIT	QTY.	REFERENCE #
66011	Filter Kit, ATX 1981-Up	1	

PART #	MISC. FILTERS	QTY.	REFERENCE #
66014	Filter, ATX Governor	1	E1FZ-7E242-A

PART #	BANDS	QTY.	REFERENCE #
66022	Band, ATX Low/Intermediate 1981-84	1	E1FZ-7D034-B
66022A	Band, ATX Low/Intermediate 1985-Up	1	E9FZ-7D034-A

PART #	BUSHINGS	QTY.	REFERENCE #
66030	Bushing Kit, ATX 1981-Up	1	
66031	Bushing, ATX Converter Hub 1981-Up	1	E1EP-7N805-A
66032	Bushing, ATX Converter Reactor 1981-Up	1	E1EP-7F437-A
66035	Bushing, ATX Inner Pump Gear 1981-Up	1	E1EP-7B259-A
66036	Bushing, ATX Stator 1981-Up	1	
66046	Bushing, ATX Direct Drum 1981-Up	1	E1EP-7F233-A
66046A	Bushing, ATX Direct Clutch (Oversize) 1981-Up	1	
66046B	Bushing, ATX Turbine Shaft 1981-Up	1	E1EP-7F214-A
66052	Bushing, ATX Sun Gear (Use 66058)	1	E1EP-7D065-A
66058	Bushing, ATX Planet & Sun Gear 1981-Up	1-2	E1EP-7D065-A
66060	Bushing, ATX Planet Ring Gear (Top Hat Style) 1981-Up	1	E1EP-7F440-A
66064	Bushing, ATX Transfer Housing 1981-Up	1	E1EP-7F366-A

PART #	METAL CLAD SEALS	QTY.	REFERENCE #
66070	Seal, ATX Front 1981-Up	1	E6FZ-7F401-A
66072	Seal, ATX Linkage 1981-Up	1	E1FZ-7B498-A
76073	Seal, ATX Throttle Lever 1981-Up	1	E0AZ-7F337-A
66076	Seal, ATX Axle (Both) 1981-Up	1-2	E1FZ-1177-A
66077	Seal, ATX Axle (Differential Retainer Side) (Use 66076)	1	EF1Z-1177-A

PART #	FRICTION CLUTCH	QTY.	REFERENCE #
66104	Friction, ATX Intermediate & Reverse Clutch (.078") 1981-91	4-6	E1FZ-7B164-B
66104A	Friction, ATX Intermediate & Reverse Clutch (.078") 1992-Up	4-6	F23Z-7B164-B
66106	Friction, ATX Direct Clutch (.076") 1981-Up	3-4	E1FZ-7B164-A
66119	Friction Module, ATX 1981-91	1	
66119A	Friction Module, ATX 1992-Up	1	

PART #	STEEL CLUTCH	QTY.	REFERENCE #
66124	Steel, ATX Intermediate Clutch (.070") (6 5/8"ID) 1981-91	2-3	E2FZ-7B442-A
66124A	Steel, ATX Intermediate Clutch (.070") (6 1/16"ID) 1992-Up	3	F23Z-7B442-A

© Whatever It Takes Transmission Parts. Inc.

66126	Steel, ATX Direct Clutch (.070") 1981-Up	3-4	E1FZ-7B442-A
66130	Steel, ATX Reverse Clutch (.070") 1981-91	2-3	E1FZ-7B442-C
66130A	Steel, ATX Reverse Clutch (.070") 1992-Up	3	F23Z-7B442-B
66139	Steel Module, ATX 1981-91	1	
66139A	Steel Module, ATX 1992-Up	1	

PART #	CLUTCH PRESSURE PLATES	QTY.	REFERENCE #
66144	Pressure Plate, ATX Intermediate Clutch (6 5/8"ID) 1981-91	1	E23Z-7B066-A
66144A	Pressure Plate, ATX Intermediate Clutch (6 1/16"ID) 1992-Up	1	
66146	Pressure Plate, ATX Direct Clutch 1981-Up	1	E1FZ-7B066-A
66150	Pressure Plate, ATX Reverse Clutch 1981-Up	1	F23Z-7B066-B

PART #	VALVE BODY KITS	QTY.	REFERENCE #
S66165	Valve Body Kit, ATX 1981-Up (Superior)	1	KATX
T66165	Shift Kit, ATX 1981-Up (Transgo)	1	SK® FX

PART #	OIL SEALING RINGS	QTY.	REFERENCE #
66175	Ring Kit, ATX (Metal) 1981-Up	1	
66175T	Ring Kit, ATX (Teflon) 1981-Up	1	
66179	Ring, ATX Intermediate Clutch (2.072"OD) (Metal) 1981-Up	3	E1FZ-7D020-A
66179T	Ring, ATX Intermediate Clutch (2.072"OD) (Teflon) 1981-Up	3	E1FZ-7D020-A
66183	Ring, ATX Direct Clutch (1.572"OD) (Metal) 1981-Up	2	E1FZ-7D019-A
66183T	Ring, ATX Direct Clutch (1.572"OD) (Teflon) 1981-Up	2	E1FZ-7D019-A

PART #	WASHERS & BEARINGS	QTY.	REFERENCE #
66200	Washer Kit, ATX 1981-Up	1	
66201A	Bearing Kit, ATX (Torrington) 1981-Up	1	
66210	Washer, ATX Stator (.046") (# EA) 1981-Up	1	E1FZ-7D014-E
66210A	Washer, ATX Stator (.056") (# AA) 1981-Up	1	E1FZ-7D014-A
66210B	Washer, ATX Stator (.064") (# BA) 1981-Up	1	E1FZ-7D014-B
66210C	Washer, ATX Stator (.072") (# CA) 1981-Up	1	E1FZ-7D014-C
66210D	Washer, ATX Stator (.080") (# DA) 1981-Up	1	E1FZ-7D014-D
66211	Bearing W/Races, ATX Stator To Intermediate Drum (.140" Thick, 2.600"OD, 1.930"ID) 1981-Up	1	E1FZ-7F374-A
66211A	Bearing W/Races, ATX Stator To Intermediate Drum (.195" Thick, 2.718"OD, 1.930"ID) 1981-Up	1	
66226	Bearing, ATX Intermediate Drum To Direct Drum 1981-92	1	E1FZ-7F373-A
66226B	Washer, ATX Intermediate Drum To Direct Drum 1992-Up	1	
66229	Washer, ATX Direct Drum To Sprag 1981-Up	1	E1FZ-7A623-A
66232	Washer, ATX Direct Drum To Sun Gear (4 Tab) 1981-Up	1	E1FZ-7F369-A
66251	Washer, ATX Planet To Sun Gear Drum (Front) 1981-Up	1	E1FZ-7D423-A
66254	Bearing, ATX Ring Gear To Planet (Rear) 1981-Up	1	E1FZ-7F473-A
66257	Washer, ATX Low/Intermediate Drum To Final Drive Housing 1981-Up	1	E1FZ-7F368-A
66268	Bearing, ATX Final Drive Gear To Final Drive Housing 1981-Up	1	E1FZ-7F405-A
66271	Caged Needle Bearing, ATX Final Drive Input Gear (.775" Long) 1981-E83	1	E1FZ-7F403-A
66271A	Caged Needle Bearing, ATX Final Drive Input Gear (.845" Long) L1983-Up	1	F2FZ-7F403-A
66272	Bearing, ATX Final Drive Gear To Case 1981-Up	1	E1FZ-7F404-A
T66275	Axle Stabilizer, ATX (Teckpak) 1981-Up	1	86125LRB
66279	Caged Needle Bearing, ATX Final Drive Housing To Input Gear 1981-Up	1	E1FZ-7F380-A
66282	Cup Race, ATX Idler Gear (Fits 31 & 39 Teeth Gears) 1981-Up	2	JLM67041P
66283	Cone Bearing, ATX Idler Gear (Fits 31 & 39 Teeth Gears) 1981-Up	2	JLM67020P
66284K	Shim Kit, ATX Idler Gear (.005") (10 Per Pack) 1981-Up (Sonnax)	1	86539-Z5
66288	Cup Race, ATX Differential (Both Sides) 1981-E83	2	
66289	Cone Bearing, ATX Differential (Both Sides) 1981-E83	2	
66289A	Ball Bearing, ATX Differential (Both Sides) L1983-Up	2	E3FZ-4221-B
66290A	Shim, ATX Differential Ball Bearings (Both Sides) L1983-Up	2	E3FZ-4067-A

PART #	GASKETS & RUBBER COMPONENTS	QTY.	REFERENCE #
66300	Gasket, ATX Bottom Pan (Cork) 1981-Up	1	
66302	Gasket, ATX Control Cover (Top Pan) (Cork) 1981-Up	1	E1FZ-7F396-A
66303	Gasket, ATX Differential Bearing Retainer 1985-Up	1	
66310	Gasket, ATX Pump 1981-Up	1	E1FZ-7A136-A
66311	O-Ring, ATX Pump 1981-Up	1	E1FZ-7A248-A
66320	Gasket, ATX Valve Body (Upper) 1981-Up	1	E8FZ-7D100-A
66321	Gasket, ATX Valve Body (Lower) 1981-Up	1	E8FZ-7C155-A
66332	Lip Seal, ATX Intermediate Clutch (Inner) 1981-Up	1	E1FZ-7F225-A
66333	Lip Seal, ATX Intermediate Clutch (Outer) 1981-Up	1	E1FZ-7F224-A

© Whatever It Takes Transmission Parts. Inc.

PART #	GASKETS & RUBBER COMPONENTS (Continued)	QTY.	REFERENCE #
66336	Lip Seal, ATX Direct Clutch (Inner) 1981-Up	1	E5FZ-7C099-A
66337	Lip Seal, ATX Direct Clutch (Outer)	1	
66338	Lip Seal, ATX Reverse Clutch (Inner) 1981-Up	1	E1FZ-7D404-A
66339	Lip Seal, ATX Reverse Clutch (Outer) 1981-Up	1	E1FZ-7D403-A
66339A	Seal, ATX Reverse Clutch Housing (Outer) 1981-Up	1	E1FZ-7A548-A
66345	Seal, ATX Governor Cover 1981-Up	1	N801011-S
66361A	Lip Seal, ATX Low/Intermediate Servo (Large) 1981-Up	1	E1FZ-7D024-A
66361B	Lip Seal, ATX Low/Intermediate Servo (Small) 1981-82	1	E1FZ-7D025-A
66361BA	Lip Seal, ATX Low/Intermediate Servo (Small) (2.281"ID) 1983-84	1	E3FZ-7D025-A
66361BB	Lip Seal, ATX Low/Intermediate Servo (Small) (2.309"ID) 1985-Up	1	E4FZ-7D025-A
66361BC	Lip Seal, ATX Low/Intermediate Servo (Small) 1985-Up	1	E5FZ-7D025-A
66361BD	Lip Seal, ATX Low/Intermediate Servo (Small) (2.281"ID) 1986-Up	1	E6FZ-7D025-A
66362A	O-Ring, ATX Low/Intermediate Servo Cover	2-3	E1FZ-7D026-A
66369	O-Ring, ATX Speed-O Housing 1981-Up	1	E0AZ-7F337-A
44371A	O-Ring, ATX Filler Tube 1981-82	1	6264902
44371B	Boot, ATX Filler Tube 1983-Up	1	1259475
66374	O-Ring, ATX Idler Gear Shaft 1981-Up	1	N800679-S
66379	Seal, ATX Oil Filter Gasket 1981-Up	1	E1FZ-7E062-A
66387	O-Ring, ATX Differential Retainer 1981-Up	1	
66390	External Seal Kit, ATX 1981-Up		

PART #	TECHNICAL MANUALS	QTY.	REFERENCE #
66400	Technical Manual, ATX 1981-Up	1	83-ATXTM

PART #	ELECTRICAL COMPONENTS	QTY.	REFERENCE #
66410	Neutral Switch, ATX 1981-Up	1	E1FZ-7A247-A

PART #	MISC. COMPONENTS	QTY.	REFERENCE #
M462F	Union, 5/16"	1	
26487	Grommet, ATX Linkage (5/16"ID)	1	D4AZ-7341-A
26487A	Grommet, ATX Linkage (5/8"ID)	1	
26487B	Grommet, ATX Passing Gear (Narrow Groove) Green	1	E0AZ-7F330-A
26487BA	Grommet, ATX Passing Gear (Wide Groove)	1	
26487BW	Grommet, ATX Passing Gear (Narrow Groove) (Yellow Or Black)	1	
26487C	E-Clips, ATX Linkage 1981-Up	1	
T76496C	Retaining Clip, ATX Cooler Line (Push In) (Teckpak)	1	S-190

PART #	HARD PARTS	QTY.	REFERENCE #
66500	Pump, ATX Washer Type (3 Holes For #210) Can Use 66500A	1	E1FZ-7A103-A
66500A	Pump, ATX Bearing Type (Can Use 66500)	1	
66510	Pump Body W/Gears, ATX 1981-Up	1	E1AZ-7D043-A
66520	Stator, ATX Washer Type (3 Holes For #210)	1	E6FZ-7A108-A
66520A	Stator, ATX Bearing Type	1	
66528	Sleeve, ATX Converter Turbine (Goes Inside Converter) 1981-Up	1	E7SZ-7A878-A
66529	Converter Reactor, ATX With 1/2" Conver Splines 1981-85	1	E1FZ-7A108-A
66529A	Converter Reactor, ATX With 7/16" Conver Splines 1986-L87	1	E6FZ-7A108-A
66529B	Converter Reactor, ATX With 1/2" Converter Splines L1987-Up	1	
66530	Gear Set, ATX Pump 1981-Up	1	
66543	Insert, ATX Oil Pump Drive Gear 1981-Up	1	E1FZ-7F402-A
66552	Drum, ATX Intermediate Clutch (4 Clutch) 1981-Up	1	E1FZ-7D044-A
66552A	Drum, ATX Intermediate Clutch (6 Clutch) 1983-Up	1	E3FZ-7D044-A
66555	Drum, ATX Direct Clutch (3 Clutch) With Shaft (Uses A Bearing # 226) 1981-92	1	E4FZ-7F283-A
66555A	Drum, ATX Direct Clutch (4 Clutch) With Shaft (Uses A Bearing # 226) 1981-92	1	E4FZ-7F283-B
66555BA	Drum, ATX Direct Clutch (4 Clutch) With Shaft (Uses A Washer # 226) 1992-Up	1	
66557	Drum, ATX Low/Intermediate W/Sun Gear (52 Teeth) 1st Design 1981-84	1	E1FZ-7A626-A
66557A	Drum, ATX Low/Intermediate W/Sun Gear (56 Teeth) (5/8" Wide) 2nd Design 1984-87	1	E4FZ-7A626-A
66557B	Drum, ATX Low/Intermediate W/Sun Gear (56 Teeth) (3/4" Wide) 3rd Design 1988-Up	1	E7FZ-7A626-A
66562	Piston Kit, ATX Intermediate Clutch 1981-Up	1	
66565	Piston Kit, ATX Direct Clutch 1981-Up	1	
66566	Piston Kit, ATX Reverse Clutch 1981-Up	1	
66584	Planet, ATX 1st Design (29 Teeth Sun Gear # 614) 1981-E85	1	E1FZ-7A398-A
66584A	Planet, ATX 2nd Design (31 Teeth Sun Gear # 614) L1985-86	1	E4FZ-7A398-A
66584B	Planet, ATX 3rd Design (31 Teeth Sun Gear # 614) 1987-Up	1	E2FZ-7A398-A

FORD

© Whatever It Takes Transmission Parts. Inc.

66594	Ring Gear, ATX Planet 1st Design (29 Teeth Sun Gear # 614) 1981-E85	1	E3FZ-7A153-A
66594A	Ring Gear, ATX Planet 2nd Design (31 Teeth Sun Gear # 614) L1985-86	1	E4FZ-7A153-A
66594B	Ring Gear, ATX Planet 3rd Design (31 Teeth Sun Gear # 614) 1987-Up	1	E7FZ-7A153-A
66594C	Ring Gear, ATX Planet 4th Design (31 Teeth Sun Gear # 614) 1987-Up (Angled Teeth On Inside Are 7/8" Long That Planet Rides On)	1	
66614	Sun Gear, ATX 1st/3rd/Reverse (29 Teeth) 1981-E85	1	E3FZ-7N107-A
66614A	Sun Gear, ATX 1st/3rd/Reverse (31 Teeth) L1985-Up	1	E4FZ-7N107-A

PART #	SPRAGS & ONE WAY CLUTCHES	QTY.	REFERENCE #
66652	Sprag, ATX Intermediate 1981-Up	1	E1FZ-7A089-A

PART #	HARD PARTS (Continued)	QTY.	REFERENCE #
66671	Pump Shaft, ATX Oil Pump Drive 1981-Up	1	E1FZ-7B328-A
66673	Shaft, ATX Input 1981-Up	1	
66674	Shaft, ATX Intermediate 1981-Up	1	E1FZ-7F351-A
66679	Shaft, ATX Idler 1981-Up	1	
66680	Governor, ATX (10 Teeth, 1 Spring) 1981-Up	1	E1FZ-7C053-B
66680A	Governor, ATX (10 Teeth, 2 Spring) 1981-Up	1	
S66681-5	Pin, ATX Governor Body To Weights 9181-Up (Sonnax)	2	86412-01
66683	Gear, ATX Speed-O Drive Gear (2 Lug)	1	E3FZ-17285-B
66683A	Gear, ATX Speed-O Drive Gear (4 Lug)	1	E8FZ-17285-A
66683S	Gear, ATX Speed-O Drive Gear (Split Link) (For 2 Lug)	1	
66684K	Gear, ATX Governor Gear Kit 1981-Up	1	E2FZ-7F419-A
66686	Cover, ATX Governor 1981-Up	1	
66687	Retainer, ATX Governor Cover 1981-Up	1	
66710	Gear, ATX Final Drive Input (20 Teeth) (2 9/16" Long) 1981-Up	1	E3FZ-7F342-A
66710A	Gear, ATX Final Drive Input (22 Teeth) (2 9/16" Long) 1981-Up	1	E4FZ-7F342-A
66710B	Gear, ATX Final Drive Input (23 Teeth) (2 9/16" Long) 1981-Up	1	
66710C	Gear, ATX Final Drive Input (23 Teeth) (1 3/4" Long) 1981-Up	1	
66710D	Gear, ATX Final Drive Input (26 Teeth) (2 9/16" Long) 1981-Up	1	
66710E	Gear, ATX Final Drive Input (27 Teeth) (1 3/4" Long) (2 7/8" OD Of Gear) 1981-Up	1	E6FZ-7F342-A
66710F	Gear, ATX Final Drive Input (27 Teeth) (1 3/4" Long) (2 11/16" OD Of Gear) 1981-Up	1	
66710G	Gear, ATX Final Drive Input (27 Teeth) (2 9/16" Long) (2 7/8" OD Of Gear) 1981-Up	1	
66710H	Gear, ATX Final Drive Input (27 Teeth) (2 9/16" Long) (2 11/16" OD Of Gear) 1981-Up	1	
66710J	Gear, ATX Final Drive Input (29 Teeth) (2 9/16" Long) 1981-Up	1	
66710K	Gear, ATX Final Drive Input (31 Teeth) (2 9/16" Long) 1981-Up	1	
66710L	Gear, ATX Final Drive Input (33 Teeth) (2 9/16" Long) 1981-Up	1	
66710M	Gear, ATX Final Drive Input (34 Teeth) (2 9/16" Long) 1981-Up	1	
66714K	Idler Gear W/Bearing, ATX (26 Teeth) 1981-Up	1	
66714AK	Idler Gear W/Bearing, ATX (28 Teeth) 1981-Up	1	
66714BK	Idler Gear W/Bearing, ATX (31 Teeth) (Bearing # RTR0506M) 1981-Up	1	
66714CK	Idler Gear W/Bearing, ATX (31 Teeth) (Bearing # 4T-CR0584PX2) 1981-Up	1	
66714DK	Idler Gear W/Bearing, ATX (31 Teeth) (Bearing # 57446) 1981-Up	1	
66714EK	Idler Gear W/Bearing, ATX (31 Teeth) (Bearing # JLM67041P) 1981-Up	1	E4FZ-7F475-A
66714FK	Idler Gear W/Bearing, ATX (34 Teeth) 1981-Up	1	E73Z-7F475-A
66714GK	Idler Gear W/Bearing, ATX (39 Teeth) (Bearing # JLM67041P) 1981-Up	1	E6TZ-7F475-A
66714HK	Idler Gear W/Bearing, ATX (39 Teeth) (Bearing # 4T-CR-0584PX2) 1981-Up	1	
66714JK	Idler Gear W/Bearing, ATX (40 Teeth) 1981-Up	1	
66714LK	Idler Gear W/Bearing, ATX (41 Teeth) 1981-Up	1	
66714MK	Idler Gear W/Bearing, ATX (45 Teeth) 1981-Up	1	
66715	Differential Assembly, ATX (71 Teeth) (Ball Bearing Type) L1983-Up	1	31466-20300
66715A	Differential Assembly, ATX (83 Teeth) (Ball Bearing Type) L1983-Up	1	
66715B	Differential Assembly, ATX (86 Teeth) (Tapered Bearing Type) 1981-E83	1	
66715C	Differential Assembly, ATX (86 Teeth) (Ball Bearing Type) L1983-Up	1	
66715D	Differential Assembly, ATX (88 Teeth) (Ball Bearing Type) (1.029"ID Axle) L1983-Up	1	
66715E	Differential Assembly, ATX (88 Teeth) (Ball Bearing Type) (1.112"ID Axle, 23 Splines) L1983-Up	1	
66715EA	Differential Assembly, ATX (88 Teeth) (Ball Bearing Type) (1.112"ID Axle, 25 Splines) L1983-Up	1	
66725	Retainer, ATX Differential (Aluminum, Tapered Bearing Type) 1981-E83	1	E1FZ-7F447-A
66725A	Retainer, ATX Differential (Aluminum, Ball Bearing Type) L1983-E85	1	E3FZ-7F447-A
66725B	Retainer, ATX Differential (Steel, Ball Bearing Type) L1985-Up (Can Use 66725A)	1	E5FZ-7F447-A
66735	Housing, ATX Final Drive Gear (Cast # 7F334) 1981-84	1	
66735A	Housing, ATX Final Drive Gear (Cast # RFE2) 1985-86	1	
66735B	Housing, ATX Final Drive Gear (Cast # RE6EP) L1986-Up	1	
66740	Valve Body, ATX 1981-82	1	
66740A	Valve Body, ATX 1983-86	1	
66740B	Valve Body, ATX 1987-Up	1	

FORD

© Whatever It Takes Transmission Parts. Inc.

PART #	VALVE BODY COMPONENTS	QTY.	REFERENCE #
S66741A-2	Sleeve, ATX Throttle Valve Plunger Sleeve (In Valve Body) (Sonnax)	1	86940-01
S66741B-2	Sleeve, ATX Throttle Control Valve Sleeve (Sonnax)	1	86940-03
S66741B-3K	Spring Set, ATX Throttle Control Valve (5 Per Set) (Sonnax)	1	86940-02
S66741E-3	Spring, ATX 1-2 Accumulator (Inner) Late (Sonnax)	1	
S66741TK	Valve & Sleeve, ATX Boost (Sonnax)	1	

PART #	HARD PARTS (Continued)	QTY.	REFERENCE #
66760	Case, ATX 1.6L (W/Tapered Differential Bearing) 1981-E83	1	
66760A	Case, ATX 1.6L (W/Roller Differential Bearing) L1983-84	1	
66760B	Case, ATX 1.6L (W/4 Mounting Holes Above Differential) 1985	1	
66760C	Case, ATX 1.6L (W/4 Mounting Holes Above Differential) 1986-Up	1	
66760D	Case, ATX 2.5L (Taurus, Sable) 1986-Up	1	
66765	Pan, ATX Bottom (Early Blue) 1981-E85	1	
66765A	Pan, ATX Bottom (Late, Gray or Black) L1985-86	1	
66765B	Pan, ATX Bottom 1987-Up	1	
66767	Pan, ATX Top 1981-Up	1	
66774	Housing, ATX Driven Speed-O 1981-Up	1	E7FZ-17K288-A
66775A	Converter Nut, ATX (Metric) 1981-Up	1	
66779K	Bolt Set, ATX Bottom Pan To Case	13	
66799	Nut, ATX Idler Gear	1	
66848G	Gear, ATX Driven Speed-O (23 Teeth) (Blue) 1981-UP	1	E5FZ-17271-A
66848H	Gear, ATX Speed-O Driven (25 Teeth) (Green) 1981-Up	1	E3FZ-17271-A
66848HA	Gear, ATX Speed-O Driven (25 Teeth) (Black) 1981-Up	1	E6FZ-17271-A
66848J	Gear, ATX Speed-O Driven (26 Teeth) (Natural) 1981-Up	1	E1FZ-17271-A
66852	Cushion, ATX Intermediate Clutch 1981-Up	1	
66854	Cushion, ATX Reverse Clutch 1981-Up	1	
66858	Cushion, ATX Direct Clutch 1981-Up	1	
66873	Snap Ring, ATX Holds Intermediate Pressure Plate In Drum (.053") 1981-Up	1	
66873A	Snap Ring, ATX Holds Intermediate Pressure Plate In Drum (.063") 1981-Up	1	
66873B	Snap Ring, ATX Holds Intermediate Pressure Plate In Drum (.074") 1981-Up	1	
66874	Snap Ring, ATX Holds Intermediate Retainer In Drum 1981-Up	1	
66878	Snap Ring, ATX Holds Direct Clutch Pressure Plate In Drum (.054") 1981-Up	1	
66878A	Snap Ring, ATX Holds Direct Clutch Pressure Plate In Drum (.066") 1981-Up	1	
66878B	Snap Ring, ATX Holds Direct Clutch Pressure Plate In Drum (.079") 1981-Up	1	
66879	Snap Ring, ATX Holds Direct Retainer In Drum 1981-Up	1	
66880	Snap Ring, ATX Holds Intermediate Shaft To Drum 1981-Up	1	
66892	Snap Ring, ATX Holds Reverse Clutch Pressure Plate In Case 1981-Up	1	
66896	Snap Ring, ATX Holds Low/Intermediate Servo In 1981-Up	1	
66905	Servo Assembly, ATX Low/Intermediate (W/No Groove Apply Pin) 1981-Up	1	
66905A	Servo Assembly, ATX Low/Intermediate (W/1 Groove Apply Pin) 1981-Up	1	
66905B	Servo Assembly, ATX Low/Intermediate (W/2 Groove Apply Pin) 1981-Up	1	
66905C	Servo Assembly, ATX Low/Intermediate (W/3 Groove Apply Pin) (Cast # P) 1981-Up	1	
66905CA	Servo Assembly, ATX Low/Intermediate (W/3 Groove Apply Pin) (Cast # E) 1981-Up	1	
66905D	Servo Assembly, ATX Low/Intermediate (W/4 Groove Apply Pin) 1981-Up	1	
66905E	Servo Assembly, ATX Low/Intermediate (W/5 Groove Apply Pin) 1981-Up	1	
66906	Spring, ATX Low/Intermediate Servo 1981-Up	1	
66907	Piston, ATX Low/Intermediate Servo 1981-Up	1	
66908	Pin, ATX Low/Intermediate Servo (No Groove) 1981-Up	1	
66908A	Pin, ATX Low/Intermediate Servo (1 Groove) 1981-Up	1	
66908B	Pin, ATX Low/Intermediate Servo (2 Groove) 1981-Up	1	
66908C	Pin, ATX Low/Intermediate Servo (3 Groove) 1981-Up	1	
66908D	Pin, ATX Low/Intermediate Servo (4 Groove) 1981-Up	1	
66908E	Pin, ATX Low/Intermediate Servo (5 Groove) 1981-Up	1	
66909	Cover, ATX Low/Intermediate Servo 1981-Up	1	
66956	Housing, ATX Reverse Piston 1981-Up	1	
66962	Piston, ATX Intermediate Clutch 1981-Up	1	
66965	Piston, ATX Direct Clutch 1981-Up	1	
66966	Piston, ATX Reverse Clutch 1981-Up	1	
66972	Retainer W/Spring, ATX Intermediate Clutch 1981-Up	1	E3FZ-7F222-A
66975	Retainer W/Spring, ATX Direct Clutch 1981-Up	1	
66976	Retainer W/Spring, ATX Reverse Clutch 1981-Up	1	
66991	Linkage Assembly, ATX Internal 1981-Up	1	
66992	Shift Lever, ATX External 1981-83	1	
66992B	Shift Lever, ATX External (F3 Cast #) 1984-86	1	
66992E	Shift Lever, ATX External (F6 Cast #) 1987-Up	1	
66995	Park Pawl Assembly, ATX 1981-UP	1	

FORD

© Whatever It Takes Transmission Parts. Inc.

© Whatever It Takes Transmission Parts. Inc.

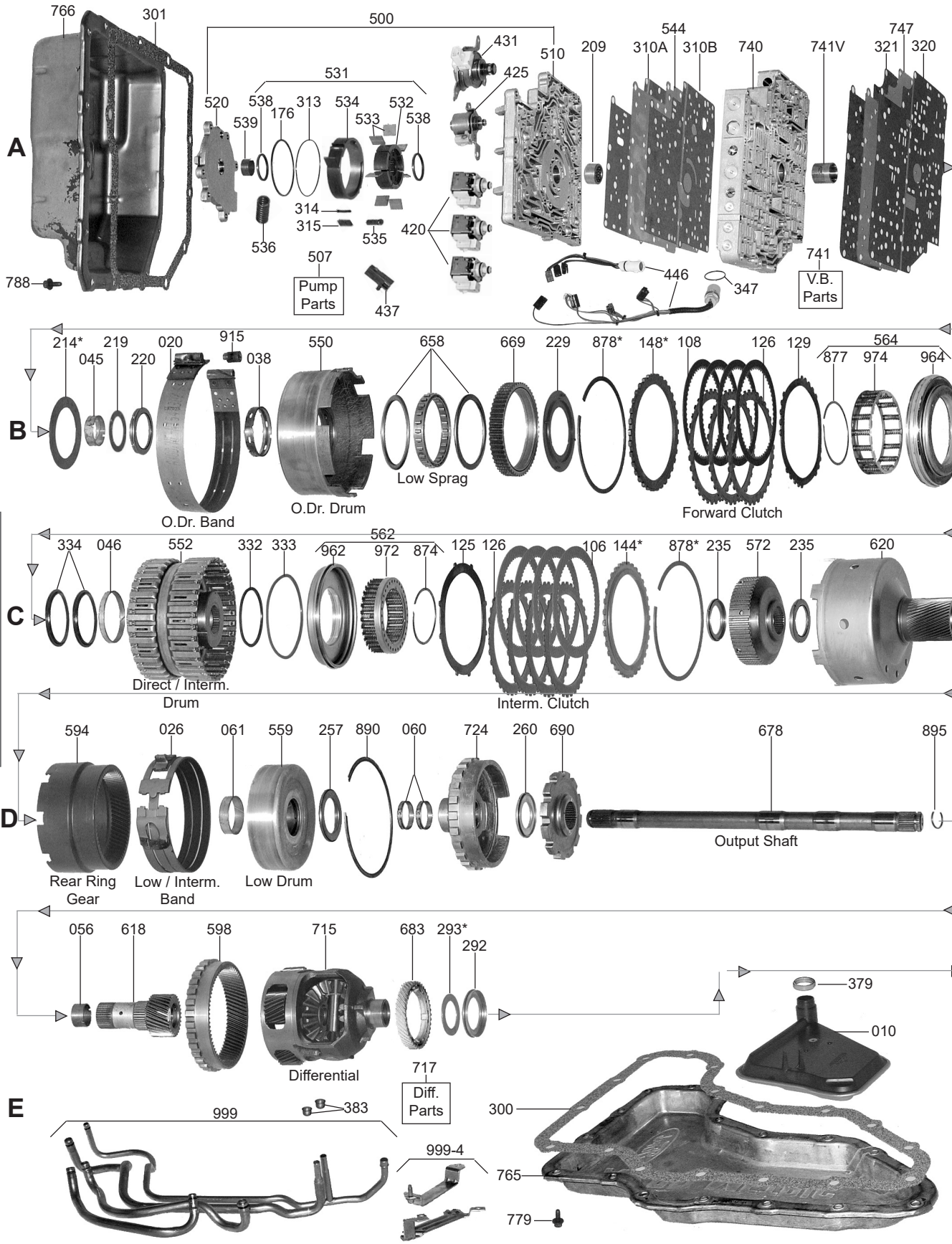

000 P&R Kit
002 OHK Kit
004 Master L/Steels Kit
006 Master W/Steels Kit
011 Filter Kit
030 Bushing Kit
119 Friction Module
139 Steel Module
165 V.B. Kit
175 Ring Kit
200 Washer Kit
201 Bearing Kit
400 Tech Manual

FORD

© Whatever It Takes Transmission Parts. Inc.

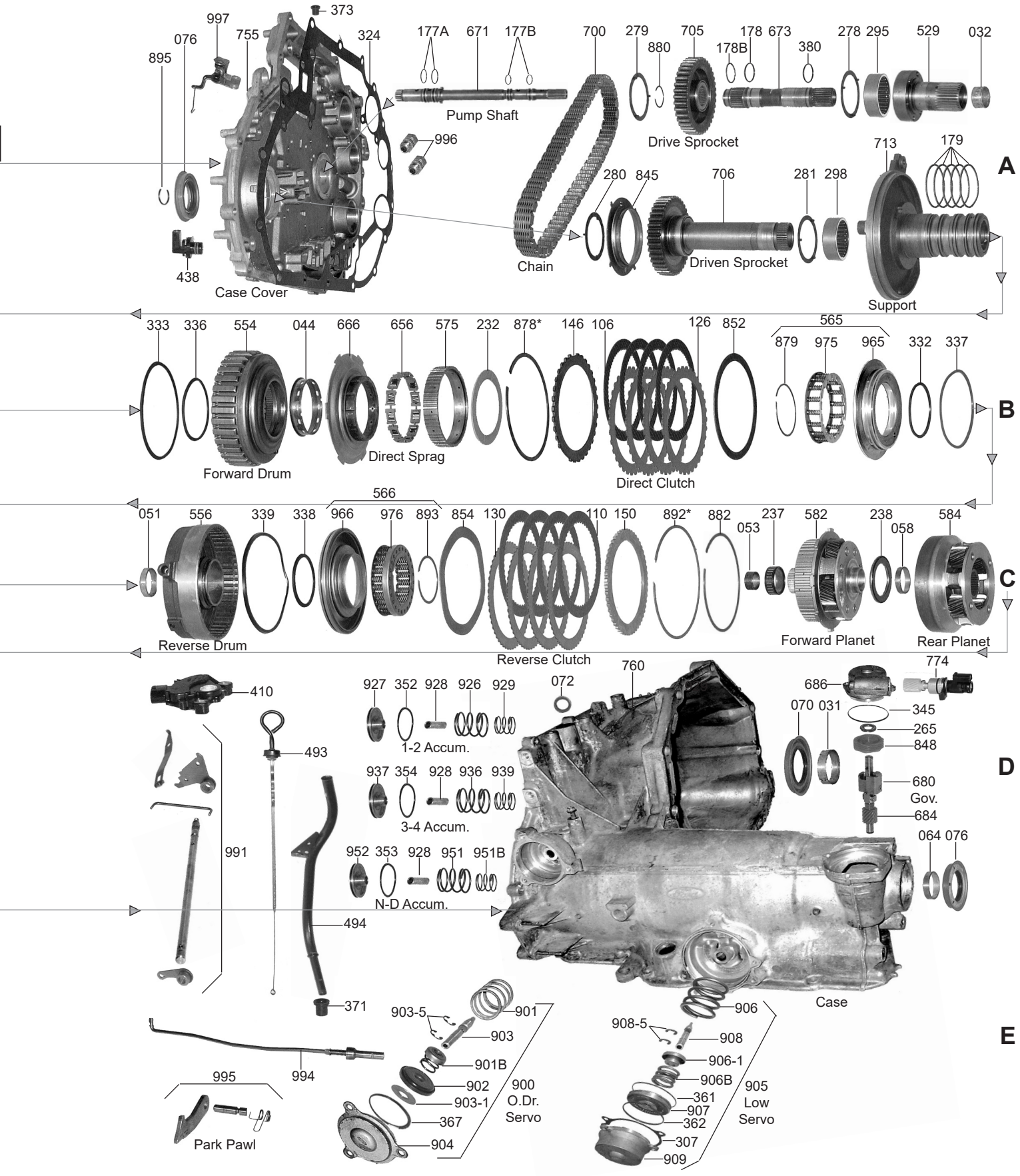

FORD

© Whatever It Takes Transmission Parts. Inc.

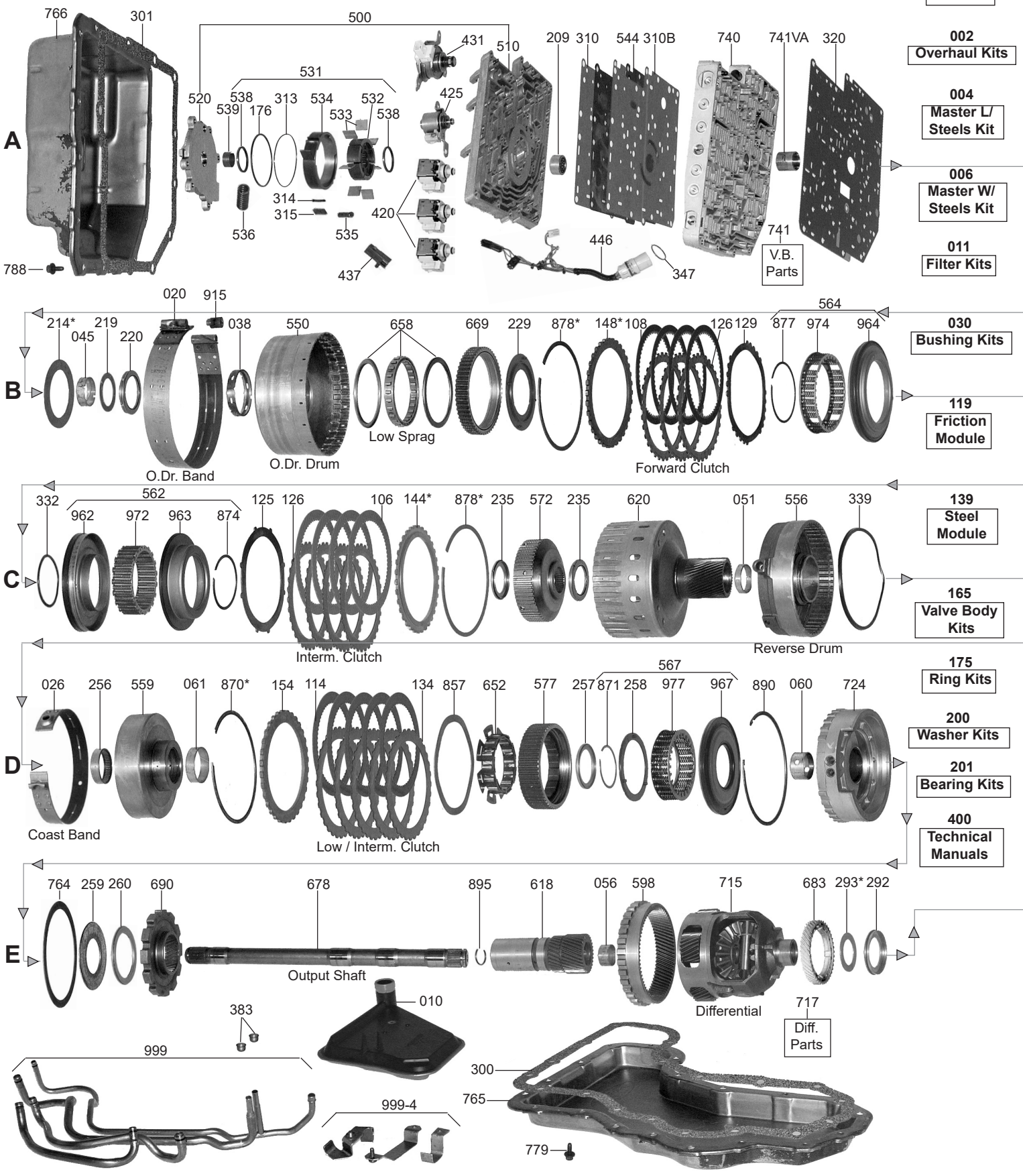
A
766
301
500
431
510
209
310
544
310B
740
741VA
320
520
538
539
176
313
534
532
533
538
531
425
314
315
420
536
535
437
788
446
347
741
V.B. Parts
B
020
915
214*
219
045
220
038
550
658
669
229
878*
148*
108
126
129
564
877
974
964
O.Dr. Band
O.Dr. Drum
Low Sprag
Forward Clutch
C
332
562
962
972
963
874
125
126
106
144*
878*
235
572
235
620
051
556
339
Interm. Clutch
Reverse Drum
D
026
256
559
061
870*
154
114
134
857
652
577
257
567
871
258
977
967
890
060
724
Coast Band
Low / Interm. Clutch
E
764
259
260
690
678
895
618
056
598
715
683
293*
292
Output Shaft
Differential
717
Diff. Parts
010
383
999
999-4
300
765
779
000
P&R Kits
002
Overhaul Kits
004
Master L/ Steels Kit
006
Master W/ Steels Kit
011
Filter Kits
030
Bushing Kits
119
Friction Module
139
Steel Module
165
Valve Body Kits
175
Ring Kits
200
Washer Kits
201
Bearing Kits
400
Technical Manuals

FORD

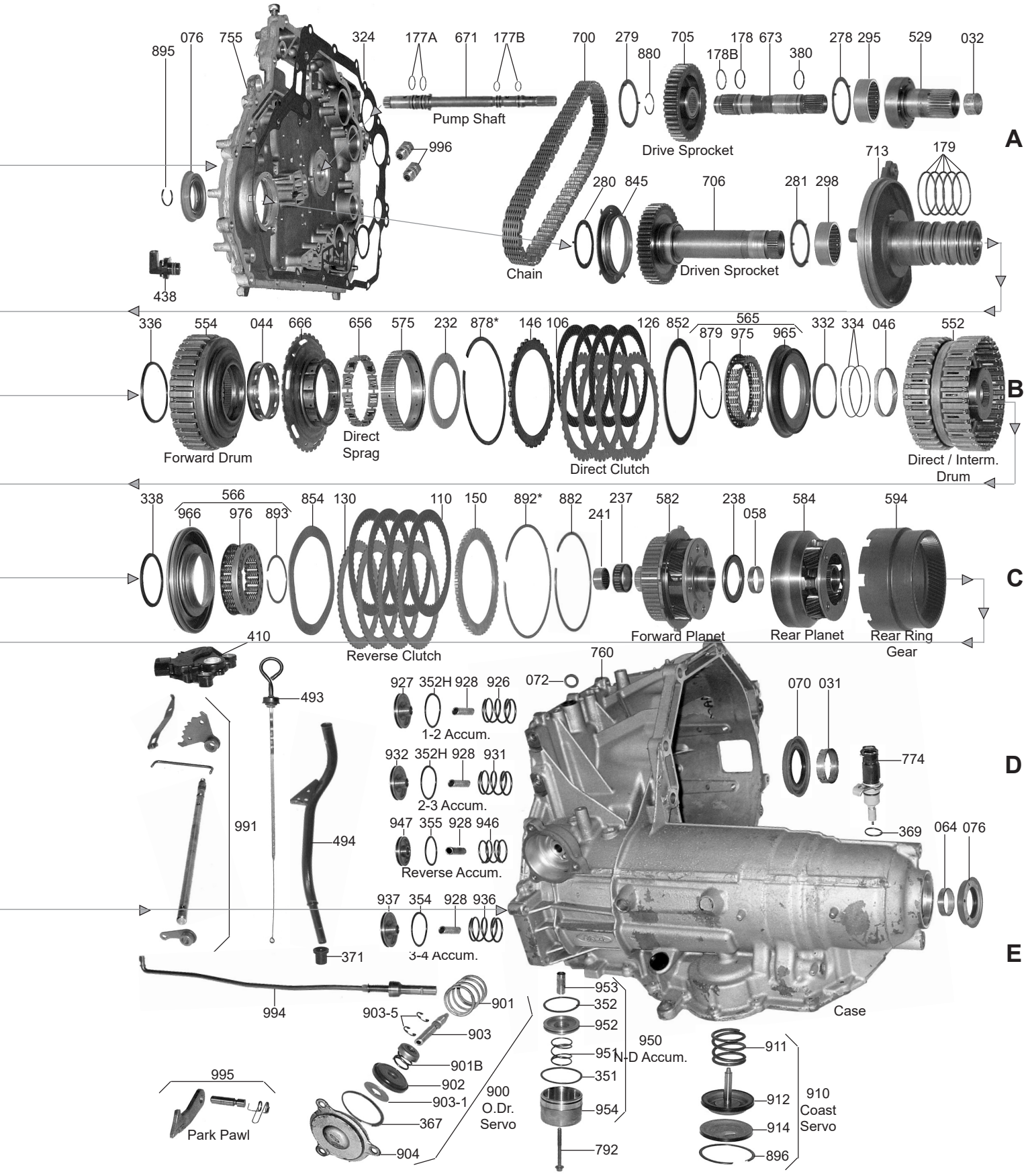

FORD

© Whatever It Takes Transmission Parts. Inc.

PART #	PAPER & RUBBER KIT	QTY.	REFERENCE #
86000	Paper & Rubber Kit, AXOD 1986-90	1	
86000E	Paper & Rubber Kit, AXODE/AX4S 1991-Up (For A 2000-Up AX4S You Must Sell An 86324G Also)	1	
86000H	Paper & Rubber Kit, AX4N 1995-99	1	
86000HA	Paper & Rubber Kit, AX4N/4F50N 2000-03	1	

PART #	OVERHAUL KITS	QTY.	REFERENCE #
86002	Overhaul Kit, AXOD 1986-90	1	
86002E	Overhaul Kit, AXODE/AX4S 1991-98 (For Bonded Pistons Sell A86962GK)	1	
86002G	Overhaul Kit, AXODE/AX4S 1999-Up (For Bonded Pistons Sell A86962GK)	1	
86002H	Overhaul Kit, AX4N 1995-99 (For Bonded Pistons Sell A86962HK)	1	
86002HA	Overhaul Kit, AX4N/4F50N 2000-03 (For Bonded Pistons Sell A86962HK)	1	
86002HB	Overhaul Kit, 4F50N 2004-Up (For Bonded Pistons Sell A86962HK)	1	

PART #	MASTER L/STEEL KIT	QTY.	REFERENCE #
86004	Master L/Steels Kit, AXOD 1986-90	1	
86004E	Master L/Steels Kit, AXODE 1991 (With Early Clutch Plates)	1	
86004EA	Master L/Steels Kit, AXODE/AX4S (With Hi-Energy Frictions) 1992-98 (For Bonded Pistons Sell A86962GK)	1	
86004G	Master L/Steels Kit, AXODE/AX4S (With Hi-Energy Frictions) 1999-Up (For Bonded Pistons Sell A86962GK)	1	
86004H	Master L/Steels Kit, AX4N (With Hi-Energy Frictions) 1995-99 (For Bonded Pistons Sell A86962HK)	1	
86004HA	Master L/Steels Kit, AX4N/4F50N (With Hi-Energy Frictions) 2000-03 (For Bonded Pistons Sell A86962HK)	1	
86004HB	Master L/Steels Kit, 4F50N (With Hi-Energy Frictions) 2004-Up (For Bonded Pistons Sell A86962HK)	1	

PART #	MASTER W/STEEL KIT	QTY.	REFERENCE #
86006	Master W/Steels Kit, AXOD 1986-E89	1	
86006A	Master W/Steels Kit, AXOD L1989-90	1	
86006E	Master W/Steels Kit, AXODE 1991 (W/Early Clutch Plates)	1	
86006EA	Master W/Steels Kit, AXODE/AX4S (With Hi-Energy Frictions) 1992-98 (For Bonded Pistons Sell A86962GK)	1	
86006G	Master W/Steels Kit, AX4S (With Hi-Energy Frictions) 1999-Up (This Kit Uses .070” Reverse Steels)(For .059” Reverse Frictions, Sell 86130H) (For Bonded Pistons Sell A86962GK)	1	
86006H	Master W/Steels Kit, AX4N (With Hi-Energy Frictions) 1995-99 (This Kit Uses .070” Reverse Steels)(For .059” Reverse Steels, Use 86130H) (For Bonded Pistons Sell A86962HK)	1	
86006HA	Master W/Steels Kit, AX4N/4F50N (With Hi-Energy Frictions) 2000-03 (This Kit Uses .070” Reverse Steels & .070” Intermediate Steels) (For .059” Reverse Steels Sell 86130H) (For Bonded Pistons Sell A86962HK)	1	
86006HB	Master W/Steels Kit, 4F50N (With High Energy Frictions) 2004-Up (This Kit Uses .070” Intermediate Steels)(For .093” Intermediate Steels Sell 86126H)(Transtec)(For Bonded Pistons Sell A86962HK)	1	

PART #	FILTER	QTY.	REFERENCE #
86010	Filter, AXOD/AXODE/AX4S (Except SHO) 1986-95 (W/.250” Tall Orange Lip Seal)	1	E6DZ-7A098-A
86010E	Filter, AXODE/AX4S(SHO 92-95) & AX4N 1995-96 (W/.490” Tall Orange Lip Seal)	1	F3DP-7G186-AB
86010H	Filter, AXODE/AX4S 1996-Up & AX4N/4F50N 1997-Up (W/.420” Tall Green Lip Seal)	1	F6DZ-7A098-A

PART #	FILTER KIT	QTY.	REFERENCE #
86011	Filter Kit, AXOD/AXODE/AX4S (Except SHO) 1986-95 (W/.250” Tall Orange Lip Seal) (Cork Gasket)	1	
86011E	Filter Kit, AXODE/AX4S(SHO 92-95) (W/.490” Tall Orange Lip Seal) (Cork Gasket)	1	
86011GW	Filter Kit, AXODE/AX4S 1996-Up (W/.420” Tall Green Lip Seal) (Bonded Gasket)	1	
86011H	Filter Kit, AX4N 1995-96 (W/.490” Tall Orange Lip Seal) (Cork Gasket)	1	
86011HW	Filter Kit, AX4N 1995-96 (W/.490” Tall Orange Lip Seal) (Bonded Gasket)	1	
86011HA	Filter Kit, AX4N 1997-Up (W/.420” Tall Green Lip Seal) (Cork Gasket)	1	
86011HAW	Filter Kit, AX4N 1997-Up (W/.420” Tall Green Lip Seal) (Bonded Gasket)	1	

© Whatever It Takes Transmission Parts. Inc.

PART #	MISC. FILTERS	QTY.	REFERENCE #
86015A	Filter, 4F50N/AX4N In Valve Body (Black Retangle Box)	1	
86016	Screen, AXOD/AXODE/AX4S/AX4N By-Pass Solenoid 1986-Up (Thimble Type)	1	E6DZ-7G308-A
86017	Screen, AXOD/AXODE 1-2 Servo (Sets Under Valve Body Plate, In The Channel Plate) 1986-Up	1	E9DZ-7H162-A

PART #	BANDS	QTY.	REFERENCE #
86020	Band, AXOD/AXODE/AX4S/AX4N Overdrive 1986-Up	1	E6DZ-7F196-A
86026	Band, AXOD/AXODE/AX4S Low Intermediate (1-2) 1986-96 (Except Below)	1	E8DZ-7D034-A
86026G	Band, AX4S Low/Intermediate (1-2) 1995-97	1	F48P-7D034-AB
86026GA	Band, AX4S Low/Intermediate (1-2) 1998-Up	1	F88P-7D034-AA
86026H	Band, AX4N Coast (1" Wide) 1995-Up	1	F4DP-7A162-A

PART #	BUSHINGS	QTY.	REFERENCE #
86030	Bushing Kit, AXOD/AXODE/AX4S (17 Bushings) 1986-Up (Has The 86044 Bushing 1/2" Wide) (Does Not Have The 86038)	1	
86030H	Bushing Kit, AX4N (12 Bushings) 1995-Up (Has The 86044A Bushing 5/8" Wide)(Does Not Have The 86038)	1	
86031	Bushing, AXOD/AXODE/AX4S/AX4N Converter Hub 1986-Up	1	E6SP-7N805-AA
86032	Bushing, AXOD/AXODE/AX4S/AX4N Converter Reactor 1986-Up (Use 64047)	1	
86034	Bushing, AXOD/AXODE/AX4N/AX4S Pump Shaft 1986-98 (Replaces Bearing # 209) (1.00"OD)	1	
86038	Bushing, AXOD/AXODE/AX4S/AX4N Overdrive Drum (W/ 6 Slots) 1986-Up	1	E8DP-7G210-AA
86044	Bushing, AXOD/AXODE/AX4S/AX4N Some Inner Sprag Race (W/12 Slotted Holes) (1/2" Wide)	1	E6SP-7D138-AC
86044A	Bushing, AXODE/AX4S/AX4N Some Inner Sprag Race (W/12 Slotted Holes) (5/8" Wide)	1	F3SP-7G138-AA
86045	Bushing, AXOD/AXODE/AX4S/AX4N Driven Sprocket Support 1986-Up	1	E6SP-7G170-AA
86046	Bushing, AXOD/AXODE/AX4S/AX4N Direct / Intermediate Clutch Drum 1986-Up	1	E6SP-7G123-AA
64047	Bushing, AXOD/AXODE/AX4S/AX4N Converter Reactor 1986-UP	1-2	8631903
86051	Bushing, AXOD/AXODE Sun Gear Shell (1.582"OD) 1986-92	2	E6SP-7F209-AA
86051A	Bushing, AXODE/AX4S/AX4N Sun Gear Shell (1.613"OD) 1993-Up	1	
86051B	Bushing, AXODE/AX4S/AX4N Sun Gear Shell (Replaces Bearing # 86237) 1993-Up (Aftermarket)	1	
86237	Needle Bearing, AXODE/AX4S/AX4N Front Planet Shaft (Outer) 1993-Up	1	
86051BK	Bushing & Sleeve Kit, AXOD/AX4S/AX4N (Contains: Bushing # 86051B & 86053B and Sleeve # 86053S) Aftermarket (With Instructions)	1	
86053	Bushing, AXOD In Front Planet Shaft (Inner) 1986	1	E6SP-7D065-AA
86053A	Needle Bearing, AXOD/AXODE/AX4S/AX4N In Front Planet Shaft (Inner) 1987-Up (Use 86241)	1	
86241	Needle Bearing, AXOD/AXODE/AX4S/AX4N In Front Planet Shaft (Inner) 1987-Up	1	
86053B	Bushing, AXOD/AXODE/AX4S/AX4N Front Planet Shaft (Inner) (Replaces Bearing # 86241) 1987-Up (Aftermarket)	1	AXB
86053S	Sleeve, AXODE/AX4S/AX4N Aluminum Lube Sleeve (Goes Between Front Planet & 4th Clutch Hub) 1987-Up (Aftermarket)	1	AXS
86056	Bushing, AXOD/AXODE/AX4S/AX4N Final Drive Sun Gear 1986-Up	1	E6SP-7G344-AA
86058	Bushing, AXOD/AXODE/AX4S/AX4N Rear Planet 1986-Up	1	E6SP-7B375-AA
86060	Bushing, AXOD Differential Support (Narrow) 1986-87	2	E6SP-7A132-AA
86060B	Bushing, AXOD/AXODE/AX4S Differential Support (Wide) 1988-Up	1	E8SP-7A132-AA
86060H	Bushing, AX4N Differential Support (Wide) 1995-Up	1	F5DP-7A132-AA
86061	Bushing, AXOD/AXODE Rear Drum With Sun Gear (1.974"OD) 1986-91 & AX4N 1995-Up	1	E6SP-7G220-AA
86061B	Bushing, AXODE/AX4S Rear Drum With Sun Gear (2.004"OD) 1992-Up	1	
86064	Bushing, AXOD/AXODE/AX4S/AX4N Rear Case 1986-Up	1	E6SP-7E110-AA

PART #	METAL CLAD SEALS	QTY.	REFERENCE #
86070	Seal, AXOD/AXODE/AX4S/AX4N Front 1986-Up	1	E6DZ-7F401-A
86072	Seal, AXOD/AXODE/AX4S/AX4N Main Control Shaft 1986-Up	1	E6DZ-7F337-A
86076	Seal, AXOD/AXODE/AX4S/AX4N Axle (Both) 1986-Up	2	E6DZ-1177-A
86079	Seal, AXOD/AXODE/AX4S/AX4N Pump Drive 1986-Up	1	E6SP-7N089-A

PART #	FRICTION CLUTCH	QTY.	REFERENCE #
86106	Friction, AXOD/AXODE/AX4S Direct & Intermediate Clutch (.065") 1986-96	9-10	E6DZ-7B164-A
86106A	Friction, AXODE/AX4S/AX4N Direct & Intermediate Clutch (.065") (Hi-Energy) 1995-Up	9-10	XF2Z-7B164-CA
86108	Friction, AXOD/AXODE Forward Clutch (.065") (52 Teeth) 1986-E91	4	E6DZ-7B164-B
86108A	Friction, AXODE/AX4S/AX4N Forward Clutch (.065") (57 Teeth) L1991-Up	4	F2DZ-7B146-A
86110	Friction, AXOD/AXODE/AX4S/AX4N Reverse Clutch (.069") 1986-Up	4	E6DZ-7B164-C
86114H	Friction, AX4N Low/Intermediate Clutch (.064") 1995-Up	4-5	F5DZ-7B164-A
86114HA	Friction, AX4N Low/Intermediate Clutch (.063") (Hi-Energy) 1996-Up	4-5	F6DZ-7B164-A

© Whatever It Takes Transmission Parts. Inc.

PART #	FRICTION CLUTCH (Continued)	QTY.	REFERENCE #
86119	Friction Module, AXOD/AXODE 1986-E91	1	
86119AA	Friction Module, AXODE/AX4S (Hi-Energy) L1991-Up	1	
86119H	Friction Module, AX4N/4F50N (Hi-Energy) 1995-Up	1	

PART #	STEEL CLUTCH	QTY.	REFERENCE #
86125A	Steel Cushion, AXOD Intermediate Clutch (.062") (No Teeth) 1986-89	1	E6DZ-7E085-A
86125AA	Steel Cushion, AXOD/AXODE Intermediate Clutch (.062") (21 Teeth) 1990-91	1	
86125B	Steel Cushion, AXOD/AXODE Intermediate Clutch (.072") (8 Teeth) 1990-91	1	F0TZ-7E085-A
86125C	Steel Cushion, AXODE/AX4S/AX4N Intermediate Clutch (.083") (8 Teeth) 1992-Up	1	E5OZ-7E085-BA
86125D	Steel Cushion, AXODE/AX4S/AX4N Intermediate Clutch (.117") (21 Teeth) 1992-Up	1	
86125E	Steel Cushion, AX4N Intermediate Clutch (.058") (21 Teeth) 1995-Up	1	
86126	Steel, AXOD/AXODE Forward Clutch (.070") (4.710"ID) 1986-E91 (Also AXOD/AXODE/ AX4S/AX4N Intermediate Clutch 1989-Up & AXOD/AXODE/AX4S/AX4N Direct Clutch 1986-Up)	4-15	E6DZ-7B442-A
86126A	Steel, AXOD Intermediate Clutch (.090") (4.710"ID) 1986-88	5	E6DZ-7B442-B
86126AA	Steel, AXOD/AXODE/AX4S Forward/Intermediate (Kolene) (4.709"ID)(34 Teeth)(.089"Thick) 1986-Up	5	
86126B	Steel, AX4S/AX4N Direct/Intermediate Clutch (.070") (Kolene) 1996-Up	5-10	069701K
86126C	Steel, AXODE Direct Clutch (.070") (4.875"ID) 1991-Up	5	
86126E	Steel, AXODE/AX4S/AX4N Forward Clutch (.069") (4.940"ID) L1991-Up	4	F2DZ-7B442-A
86126EA	Steel, AXODE/AX4S/AX4N Forward Clutch (.069")(4.940"ID)(Kolene) L1991-Up	4	
86126G	Steel, AX4S Intermediate Clutch (.093") 1999-Up	5	
86126H	Steel, AX4N Intermediate Clutch (.093") (Kolene) (3.4L Only) 1996-Up (Also Fits AX4S Direct Clutch 1999-Up)	5-10	069709K
86129A	Steel Cushion, AXOD/AXODE Forward Clutch (.073") 21 Teeth (Waved) 1986-94 (4.725"ID)	1	E8DZ-7E085-A
86129AA	Steel Cushion, AXOD/AXODE Forward Clutch (.066") 21 Teeth (Waved) 1986-94 (4.725"ID)	1	
86129H	Steel Cushion, AXODE/AX4S/AX4N Forward Clutch (.083") 21 Teeth (Waved) 1992-Up (4.923"ID) Also Fits AXOD/AXODE Intermediate Clutch	1	F2DZ-7E085-A
86130	Steel, AXOD/AXODE/AX4S/AX4N Reverse Clutch (.070") 54 Teeth 1986-07 (3.0L/3.2L/3.8L)	4	E6DZ-7B442-C
86130H	Steel, AX4N/4F50N Reverse Clutch (.059") 52 Teeth 1998-Up (3.4L/4.6L)	4	F8OZ-7B442-BA
86134H	Steel, AX4N Low / Intermediate Clutch (.070") 1995-Up	5	F5DZ-7B442-A
86139	Steel Module. AXOD 1986-E89	1	
86139A	Steel Module, AXOD/AXODE L1989-91	1	
86139EA	Steel Module, AXODE/AX4S 1992-Up	1	
86139G	Steel Module, AX4S 1999-Up	1	
86139H	Steel Module, AX4N 1995-Up	1	

PART #	CLUTCH PRESSURE PLATES	QTY.	REFERENCE #
86144	Pressure Plate, AXOD/AXODEAX4S/AX4N Intermediate Clutch (.125") 1988-Up	1	E8DZ-7B066-A
86144A	Pressure Plate, AXOD/AXODE/AX4S/AX4N Intermediate Clutch (.203") 1986-Up	1	E6DZ-7B066-B
86144AA	Pressure Plate, AXODE Intermediate Clutch (.160") 1991-Up	1	
86144B	Pressure Plate, AX4N Intermediate Clutch (Flat) (.264") 1995-Up	1	
86146	Pressure Plate, AXOD/AXODE/AX4S Direct Clutch (.156") 1986-Up	1	E6DZ-7B066-A
86146B	Pressure Plate, AXODE Direct Clutch (.196") 1991-Up	1	
86146H	Pressure Plate, AX4N Direct Clutch (.130") 1995-Up	1	F5DZ-7B066-A
86146HC	Pressure Plate, AX4N Direct Clutch (.268") 1995-Up	1	F5DZ-7B066-D
86148	Pressure Plate, AXOD/AXODE Forward Clutch (.281") 1986-E91	1	E6DZ-7B066-C
86148H	Pressure Plate, AXODE/AX4S/AX4N Forward Clutch (.165") L1991-Up	1	
86148HC	Pressure Plate, AXODE/AX4S/AX4N Forward Clutch (.276") L1991-Up	1	
86146HE	Pressure Plate, AX4N Direct Clutch (.330")(Flat) 1995-Up	11	
86150	Pressure Plate, AXOD/AXODE/AX4S/AX4N Reverse Clutch (.196" Thick) 1986-Up	1	E6DZ-7B066-D
86150H	Pressure Plate, AX4N Reverse Clutch (.140" Thick) 1995-97	1	
86150HD	Pressure Plate, AX4N Reverse Clutch (.240" Thick) 1998-Up	1	
86150HH	Pressure Plate, AX4N Reverse Clutch (.325" Thick) 1998-Up	1	
86154H	Pressure Plate, AX4N Low / Intermediate Clutch (.196") 1995-Up	1	F5DZ-7B066-B

PART #	VALVE BODY KITS	QTY.	REFERENCE #
S86165	Valve Body Kit, AXOD 1986-90 (Superior)	1	KAXOD
T86165	Shift Kit, AXOD 1986-90 (Transgo)	1	SK® AXOD
A86165E	Valve Body Kit, AXODE/AX4S (Ratio-Tek "Intelligent Service Package)	1	
S86165B	Lube Kit, AXOD/AXODE Dam (Helps Prevent Planet Burnout) 1986-Up (Superior)	1	KAXOD-L
S86165E	Valve Body Kit, AXODE 1991-Up (Superior)	1	KAXODE
T86165E	Shift Kit, AXODE/AX4S 1991-99 (Transgo)	1	SK® AXODE
A86165H	Valve Body, AX4N/4F50N (Ratiotek "Intelligent Service Package")	1	
T86165H	Shift Kit, AX4N/4F50N 1995-Up (Upgraded With Boost Valve)(Transgo)	1	SK® AX4N

© Whatever It Takes Transmission Parts. Inc.

S86165S	Valve Body Kit, AXOD (With Steel Boost Valve & Sleeve) 1986-90 (Superior)	1	KAXOD-V
S86165SC	1-2 Capacity Modulator Springs Kit, AXOD With Clips (Corrects Soft 1-2 Shift) 1986-90 (Superior)	1	K006
T86167E	Shift Kit, AXODE/AX4S JR 1995-03 (Transgo)	1	SK® AXODE-JR

PART #	OIL SEALING RINGS	QTY.	REFERENCE #
86175	Ring Kit, AXOD/AXODE.AX4S/AX4N (Metal) 1986-Up	1	
86175T	Ring Kit, AXOD/AXODE.AX4S/AX4N (Teflon) 1986-Up	1	
86176	Ring, AXOD/AXODE/AX4S/AX4N Pump Slide (3.079"OD) (Metal) 1986-Up	1	E6DZ-7G281-A
86177AT	Ring, AXOD/AXODE/AX4S/AX4N Pump Shaft (Rear) (.833"OD) (Teflon) 1986-Up	2	E6DZ-7G093-A
86177BT	Ring, AXOD/AXODE/AX4S/AX4N Pump Shaft (Front) (.693"OD) (Teflon) 1986-Up	2	E6DZ-7G092-A
86178	Ring, AXOD/AXODE/AX4S/AX4N Turbine Shaft (Front) (1.033"OD) (Metal) 1986-Up	1	E6DZ-7G091-A
86178T	Ring, AXOD/AXODE/AX4S/AX4N Turbine Shaft (Front) (1.033"OD) (Teflon) 1986-Up	1	
86178BT	Ring, AXOD/AXODE/AX4S/AX4N Turbine Shaft (Rear) (1.008"OD) (Teflon) 1986-Up	1	E6DZ-7G090-A
86179	Ring, AXOD/AXODE/AX4S/AX4N Forward / Direct (2.466"OD) (Metal) 1986-Up	5	TAW-1892
86189T	Ring, AXOD Governor (.529"OD) (Teflon) 1986-90	1	E6SP-7G174-AA

PART #	WASHERS & BEARINGS	QTY.	REFERENCE #
86200	Washer Kit, AXOD/AXODE (6 Plastic & 1 Metal) 1986-94	1	
86200A	Washer Kit, AXOD/AXODE/AX4S/AX4N (8 Plastic & 1 Metal) Combo 1986-Up	1	
86200B	Washer Kit, AXODE/AX4S (7 Plastic) 1995-Up	1	
86200H	Washer Kit, AX4N 1995-Up	1	
86201A	Bearing Kit, AXOD/AXODE/AX4S/AX4N (Includes 9 Bearings) 1986-Up	1	
86201H	Bearing Kit, AX4N/4F50N 1995-Up	1	
86209	Caged Needle Bearing, AXOD/AXODE/AX4S/AX4N Pump Shaft (1.00"OD) (.434" Wide) 1986-98	1	F1DZ-7G184-AA
86209K	Caged Needle Bearing Kit, AXOD/AXODE/AX4S/AX4N Pump Shaft (1.00"OD) (.434" Wide) 1986-98 (With A Separate Seal)	1	
S14209A	Bearing, AX4N / AX4S Pump Shaft Needle (With Seal) 1999-Up (Sonnax)	1	
86209AA	Caged Needle Bearing, AX4N Pump Shaft (1.065"OD) (.568" Wide) With Seal 2000-Up	1	XF2Z-7G184-AA
86209AB	Caged Needle Bearing, AX4S Pump Shaft With Internal Seal (1.00"OD) 2000-Up (Will Retro Fit 1986-Up AXOD/AXODE/AX4S/AX4N With 1.00"OD)	1	
86214	Washer, AXOD/AXODE/AX4S/AX4N Driven Sprocket Support To Overdrive Drum (.088") 1986-Up	1	E6DZ-7D014-A
86214A	Washer, AXOD/AXODE/AX4S/AX4N Driven Sprocket Support To Overdrive Drum (.098") 1986-Up	1	E6DZ-7D014-B
86214B	Washer, AXOD/AXODE/AX4S/AX4N Driven Sprocket Support To Overdrive Drum (.107") 1986-Up	1	E6DZ-7D014-C
86214C	Washer, AXOD/AXODE/AX4S/AX4N Driven Sprocket Support To Overdrive Drum (.117") 1986-Up	1	E6DZ-7D014-D
36217	Bearing W/Races, AXOD/AXODE/AX4S/AX4N Driven Sprocket Support To Direct & Intermediate Drum 1986-Up	1	E6DZ-7F240-A
86219	Washer, AXOD/AXODE/AX4S/AX4N Driven Sprocket Support To Direct & Intermediate Drum (.056"-.062")	1	E6DZ-7G273-A
86219A	Washer, AXOD/AXODE/AX4S/AX4N Driven Sprocket Support To Direct & Intermediate Drum (.064"-.070")	1	E6DZ-7G273-B
86219B	Washer, AXOD/AXODE/AX4S/AX4N Driven Sprocket Support To Direct & Intermediate Drum (.076"-.080")	1	E6DZ-7G273-C
86219C	Washer, AXOD/AXODE/AX4S/AX4N Driven Sprocket Support To Direct & Intermediate Drum (.085"-.089")	1	E6DZ-7G273-D
86220	Bearing W/Races, AXOD/AXODE/AX4S Driven Sprocket Support To Direct & Intermediate Drum (Use 36217)	1	E6DZ-7F240-A
86229	Washer, AXOD/AXODE/AX4S/AX4N Forward Drum To Low Sprag (With 4 Flat Tabs) 1986-Up	1	E6DZ-7A166-A
86229A	Washer, AX4N Forward Drum To Low Sprag (With 4 Round Tabs)(With 3 ID Notches) 1995-Up	1	
86232	Washer, AXOD/AXODE/AX4S/AX4N Direct / Intermediate Drum To Direct Sprag (2 Tab) 1986-Up	1	E6DZ-7F369-A
86235	Bearing W/Race, AXOD/AXODE/AX4S/AX4N Intermediate Hub (Both Sides) 1986-Up	2	E6DZ-7C096-A
86237	Caged Needle Bearing, AXODE/AX4S/AX4N Front Planet Shaft (Outer) 1993-Up	1	
86238	Bearing W/Race, AXOD/AXODE/AX4S/AX4N Front Planet To Rear Planet 1986-Up	1	E6DZ-7G177-A
86241	Caged Needle Bearing, AXOD/AXODE/AX4S/AX4N Front Planet Shaft (Inner) 1986-Up	1	86308
T-96003-MTL	Installation Tool, AXOD/AXODE/AX4S/AX4N (For The 86241 Bearing) (Sonnax)	1	
36254C	Bearing W/Races, AXOD/AXODE/AX4S Rear Sun Gear Drum To Differential Support 1986-Up	1	E6DZ-7G178-A
86256H	Needle Bearing, AX4N Inside Coast Clutch Drum (Drum With Sun Gear)	1	
86257	Bearing W/Races, AXOD/AXODE/AX4S Rear Sun Gear Drum To Differential Support 1986-Up (Use 36254C)	1	E6DZ-7G178-A
86257H	Bearing W/Races, AX4N Rear Sun Gear Drum To Differential Support 1995-Up	1	F5DZ-7G178-A

© Whatever It Takes Transmission Parts. Inc.

PART #	WASHERS & BEARINGS (Continued)	QTY.	REFERENCE #
86258H	Washer, AX4N Low / Intermediate Clutch Hub To Low / Intermediate Spring Retainer (3 Tab) 1995-Up	1	
86259HA	Race, AX4N Differential Support To Park Gear (2.15-2.25mm) (#1 Green) 1995-Up	1	F4DZ-7F451-AB
86259HB	Race, AX4N Differential Support To Park Gear (2.27-2.37mm) (#2 Blue) 1995-Up	1	F4DZ-7F451-BB
86259HC	Race, AX4N Differential Support To Park Gear (2.39-2.49mm) (#3 Black) 1995-Up	1	F4DZ-7F451-CB
86259HD	Race, AX4N Differential Support To Park Gear (2.51-2.61mm) (#4 White) 1995-Up	1	F4DZ-7F451-DB
86259HE	Race, AX4N Differential Support To Park Gear (2.53-2.73mm) (#5 Brown) 1995-Up	1	F4DZ-7F451-EB
86259HG	Race, AX4N Differential Support To Park Gear (2.75-2.85mm) (#6 Gold) 1995-Up	1	F4DZ-7F451-FB
86260	Bearing W/Race, AXOD/AXODE/AX4S Differential Support To Parking Gear 1986-Up	1	E6DZ-7F405-A
86260H	Bearing W/Race, AX4N Differential Support To Parking Gear 1995-Up	1	F5DZ-7F405-A
86265	Bearing W/Race, AXOD/AXODE/AX4S Drive Speed-O Gear To Cover 1986-Up	1	E6DZ-7G173-A
86278	Washer, AXOD/AXODE/AX4S Drive Sprocket (Both Sides) (3 Tab) 1986-Up (The 3 Tabs Are Not Equal Distance From Each Other)	2	E6DZ-7G099-A
86278A	Washer, AX4N Drive Sprocket (Both Sides) (3 Tab) 1995-Up (The 3 Tabs Are Equal Distance From Each Other)	2	F5DZ-7G099-A
86279	Washer, AXOD/AXODE/AX4S Drive Sprocket To Case Cover 1986-Up (Use 86278)	1	E6DZ-7G099-A
86279A	Washer, AX4N Drive Sprocket To Case Cover 1995-Up (Use 86278A)	1	F5DZ-7G099-A
86280	Washer, AXOD/AXODE/AX4S Driven Sprocket To Case Cover (Metal)(3 Flat Tabs)(.060" Thick)(2.990"OD)(2.530"ID)	1	E6DZ-7G096-A
86280A	Washer, AXODE/AX4S Driven Sprocket To Case Cover (Plastic, 3 Flat Tabs) 1995-Up(W/Ears)	1	F5DZ-7G096-A
86280B	Washer, AX4S/AX4N Driven Sprocket To Case Cover (Black Plastic)(3 Square Tabs)(.060" Thick)(2.980"OD)(2.525"ID) 1995-Up	1	
86281	Washer, AXOD/AXODE/AX4S/AX4N Driven Sprocket To Direct / Intermediate Support (Plastic)(3 Round Tabs)(.055" Thick)(3.225"OD)(2.635"ID)	1	E6DZ-7G115-A
86289	Bearing W/Race, AXOD/AXODE/AX4S/AX4N Differential To Sun Gear 1986-Up	1	E6DZ-7F404-A
86290H	Spacer, AX4N Differential Ring Gear To Case 1995-Up	1	
86292	Bearing W/Race, AXOD/AXODE/AX4S/AX4N Differential To Case 1986-05	1	E6DZ-7G112-A
86292A	Bearing W/Race, AXOD/AXODE/AX4S AX4N Differential To Case 2009-16	1	
86293	Washer, AXOD/AXODE Differential To Case (.045"-.049") 1986-91	1	E6DZ-7G103-A
86293A	Washer, AXOD/AXODE Differential To Case (.055"-.059") 1986-91	1	E6DZ-7G103-B
86293B	Washer, AXOD/AXODE Differential To Case (.064"-.069") 1986-91	1	E6DZ-7G103-C
86293BC	Washer, AXODE/AX4S/AX4N Differential To Case (.048") 1992-Up	1	F2DZ-7G103-C
86293C	Washer, AXODE/AX4S/AX4N Differential To Case (.061") 1992-Up	1	F2DZ-7G103-D
86293CA	Washer, AXODE/AX4S/AX4N Differential To Case (.065") 1992-Up	1	F2DZ-7G103-E
86293CB	Washer, AXODE/AX4S/AX4N Differential To Case (.068") 1992-Up	1	F2DZ-7G103-F
86293CC	Washer, AXODE/AX4S/AX4N Differential To Case (.072") 1992-Up	1	F2DZ-7G103-G
86295A	Caged Needle Bearing, AXOD/AXODE/AX4S/AX4N Converter Reactor (Inner) 1986-Up	1	E6DZ-7G233-A
86298A	Caged Needle Bearing, AXOD/AXODE/AX4S/AX4N Driven Sprocket Support (Inner) 1986-Up	1	E6DZ-7FG247-A

PART #	GASKETS & RUBBER COMPONENTS	QTY.	REFERENCE #
86300	Gasket, AXOD/AXODE/AX4S Bottom Pan (Cork) 1986-96	1	E6DZ-7A191-A
86300GW	Gasket, AX4S Bottom Pan (Bonded) 1995-Up	1	E6DZ-7A191-A
86300H	Gasket, AX4N Bottom Pan (Cork) 1995-Up	1	F5DZ-7A191-A
86300HW	Gasket, AX4N Bottom Pan (Bonded) 1995-Up	1	F5DZ-7A191-A
86301	Gasket, AXOD/AXODE/AX4S Side Cover (Cork) 1986-96	1	E6DZ-7F396-A
86301F	Gasket, AXOD/AXODE/AX4S Side Cover (Farpak) 1986-96	1	
86301W	Gasket, AXOD/AXODE/AX4S Side Coverl (Bonded) 1986-Up	1	
86301H	Gasket, AX4N Side Cover (Cork) 1995-00	1	F5DZ-7F396-A
86301HW	Gasket, AX4N Side Cover (Plastic / RubberBonded) 1995-00	1	F5DZ-7F396-A
86301HBV	Gasket, 4F50N Side Cover (Rubber Molded) 2001-Up	1	YF1Z-7F396-BA
86307L	Gasket, AXOD/AXODE/AX4S Low / Intermediate Servo 1986-Up	1	F2DZ-7D026-A
86310A	Gasket, AXOD Pump To Seperator Plate (No Stripe) 1986	1	E6DZ-7G331-A
86310AA	Gasket, AXOD Pump To Seperator Plate (White Stripe) 1987	1	E7DZ-7G331-A
86310AC	Gasket, AXOD Pump To Seperator Plate (Yellow Stripe) 1988-90	1	E8DZ-7G331-A
86310AD	Gasket, AXOD Pump To Seperator Plate (Blue Stripe) 1990	1	E9OY-7G331-A
86310AE	Gasket, AXODE/AX4S Pump To Seperator Plate 1991-03	1	F1DZ-7G331-A
86310BA	Gasket, AXOD Pump Seperator Plate To Valve Body (No Stripe) 1986	1	E6DZ-7A136-A
86310BB	Gasket, AXOD Pump Seperator Plate To Valve Body (White Stripe) 1987	1	E7DZ-7A136-A
86310BC	Gasket, AXOD Pump Seperator Plate To Valve Body (Yellow Stripe) 1988-89	1	E8DZ-7A136-A
86310BD	Gasket, AXOD Pump Seperator Plate To Valve Body (Blue Stripe) 1990	1	E9OY-7A136-A
86310BE	Gasket, AXODE/AX4S Pump Seperator Plate To Valve Body 1991-03	1	F1DZ-7A136-A
86310GB	Bonded Gasket, AX4S Pump (Cast # AH) 1994-95	1	
86310GC	Bonded Gasket, AX4S Pump (Cast # 51) (Taurus, Sable All 1996-98) (Windstar 3.0L 1994-97)	1	
86310GE	Bonded Gasket, AX4S Pump (Cast # 99) (Taurus, Sable 3.0L, Windstar 3.0L/3.8L 1999)	1	
86310HA	Gasket, AX4N Pump To Seperator Plate 1995-97	1	

© Whatever It Takes Transmission Parts. Inc.

86310HB	Gasket, AX4N Pump Seperator Plate To Valve Body 1995-97	1	
86310HC	Gasket, AX4N Pump To Seperator Plate 1998-03	1	
86310HD	Gasket, AX4N Pump Seperator PlateTo Valve Body 1998-03	1	
86310HE	Gasket, AX4N (4F50N) Pump To Seperator Plate 2004-05	1	
86310HF	Gasket, AX4N (4F50N) Pump Seperator Plate To Valve Body 2004-05	1	
86313	O-Ring, AXOD/AXODE/AX4S/AX4N Oil Pump Slide 1986-Up	1	E6DZ-7G282-A
86313A	O-Ring, AXOD/AXODE/AX4S/AX4N Outer Pump Slide 1986-Up	1	
54314B	Seal, AXOD/AXODE/AX4S/AX4N Pump Slide (Rubber) 1986-Up	1	8631283
54315B	Seal, AXOD/AXODE/AX4S/AX4N Pump Slide (Teflon) 1986-Up	1	8631877
86320	Gasket, AXOD Valve Body Seperator Plate To Case Cover (No Stripe) 1986	1	E6DZ-7C155-A
86320B	Gasket, AXOD Valve Body Seperator Plate To Cover (White Stripe) 1987	1	E7DZ-7C155-A
86320C	Gasket, AXOD Valve Body Seperator Plate To Cover (Yellow Stripe) 1988-90	1	E8DZ-7C155-A
86320E	Gasket, AXODE Valve Body Seperator Plate To Case Cover 1991-98	1	F1DZ-7C155-A
86320EB	Gasket, AX4S Valve Body Seperator Plate To Case Cover 1999-Up (Yellow Stripe) This Replaces The Gasket On The Bonded Plate)	1	
86320F	Gasket, AX4N Valve Body Seperator Plate To Case Cover 1994-97 (Yellow Stripe) This Replaces The Gasket On The Bonded Plate	1	
	(Yellow Stripe) (This Replaces The Gasket On The Bonded Plate)		
86320FA	Gasket, AX4N Valve Body Seperator Plate To Case Cover 1998-03 (Orange Stripe) This Replaces The Gasket On The Bonded Plate	1	
86320FB	Gasket, AX4N Valve Body Seperator Plate To CAse Cover 2004-07 (This Replaces The Gasket On The Bonded Plate)	1	
86320GA	Bonded Gasket, AX4S Valve Body (Cast # 40) 1994-95 (Taurus, Sable 3.0L)	1	F5DZ-7Z490-C
86320GB	Bonded Gasket, AX4S Valve Body (Cast # 41) 1994-95 (Taurus, Sable, Continental 3.8L)	1	F5DZ-7Z490-D
86320GC	Bonded Gasket, AX4S Valve Body (Cast # 53) 1994-95 (Windstar 3.0L)	1	F58Z-7Z490-B
86320GD	Bonded Gasket, AX4S Valve Body (Cast # 58) 1994-95 (Windstar 3.8L)	1	F58Z-7Z490-A
86320GE	Bonded Gasket, AX4S Valve Body (Cast # 31) 1994-95 (Taurus SHO 3.2L)	1	F5DZ-7Z490-B
86320GG	Bonded Gasket, AX4S Valve Body (Cast # 67) 1994-97 (Taurus Sable 3.8L)	1	F6DZ-7Z490-B
86320GH	Bonded Gasket, AX4S Valve Body (Cast # 63) 1994-97 (Taurus, Sable 3.0L)(Also Fits Windstar 3.8L)(Cast # 42 Or #97)	1	F68Z-7Z490-A
86320GJ	Bonded Gasket, AX4S Valve Body (Cast # 98) 1998 (Taurus, Sable 3.0L, Windstar 3.0L/3.8L)	1	
86320GL	Bonded Gasket, AX4S Valve Body (Windstar All 1999-01) (Taurus/Sable 3.0L 1999) (Cast # 94, #95, #99)	1	
86320GM	Bonded Gasket, AX4S Valve Body (Cast # 00) 2000-03 (Taurus, Sable All)	1	
86320HA	Bonded Gasket, AX4N Valve Body (No Cast #) 1994-95 (Taurus, Sable 3.0L)	1	F5DZ-7Z490-A
86320HB	Bonded Gasket, AX4N Valve Body (Cast # 11) 1995-97 (All With 4.6L)	1	F5OZ-7Z490-A
86320HC	Bonded Gasket, AX4N Valve Body (Cast # 13) 1995-97 (Taurus, Sable 3.0L With 12 Valves)	1	
86320HD	Bonded Gasket, AX4N Valve Body (Cast # 15) 1995-97 (Taurus SHO Sable 3.4L)	1	F6DZ-7Z490-A
86320HE	Bonded Gasket, AX4N Valve Body (Cast # 14) 1995-97 (Taurus, Sable 3.0L With 24 Valves) (Use 86320HC)	1	
86320HG	Bonded Gasket, AX4N Valve Body (Cast # 82 or 86) 1998-99 (Taurus, Sable 3.0L With 24 Valves)	1	
86320HH	Bonded Gasket, AX4N Valve Body (Cast # 83 or 87) 1998-99 (Taurus, Sable 3.0L With 12 Valves)	1	
86320HJ	Bonded Gasket, AX4N Valve Body (Cast # 81 or 85) 1998-99 (Taurus SHO 3.4L)	1	
86320HL	Bonded Gasket, AX4N Valve Body (Cast # 80 or 84) 1998 (Continental 4.6L)	1	
86320HM	Bonded Gasket, AX4N Valve Body (Cast # 90) 1999 (Continental 4.6L)	1	
86320HN	Bonded GAsket, AX4N (Taurus, Sable & Windstar 2001-03) (Cast #5)	1	
86320HP	Bonded Gasket, AX4N Valve Body (Taurus, Sable, Freestar, Monterey 2004-06)(Cast # 04)	1	
86321	Gasket, AXOD Valve Body To Seperator Plate (No Stripe) 1986	1	E6DZ-7D100-A
86321B	Gasket, AXOD Valve Body To Seperator Plate (White Stripe) 1987	1	E7DZ-7D100-A
86321C	Gasket, AXOD Valve Body To Seperator Plate (Yellow Stripe) 1988-90	1	E8DZ-7D100-A
86321E	Gasket, AXODE Valve Body To Seperator Plate 1991-98	1	F1DZ-7D100-A
86321EB	Gasket, AX4S Valve Body To Seperator Plate (Blue Stripe) 1999-Up (This Replaces The Gasket On The Bonded Plate)	1	
86321F	Gasket, AX4N Valve Body To Seperator Plate 1994-97 (White Stripe) (This Replaces The Gasket On The Bonded Plate)	1	
86321FA	Gasket, AX4N Valve Body To Seperator Plate 1998-03 (Green Stripe) (This Replaces The Gasket On The Bonded Plate)	1	
86321FB	Gasket, AX4N Valve Body To Seperator Plate 2004-07 (This Replaces The Gasket On The Bonded Plate)	1	
86324	Gasket, AXOD/AXODE/AX4S Case Cover To Case 1986-99	1	E6DZ-7G303-A
86324G	Gasket, AX4S Case Cover To Case 2000-Up	1	YF1Z-7G303-AA
86324H	Gasket, AX4N Case Cover To Case (Beaded) 1995-99	1	F5DZ-7G303-A
86324HA	Gasket, AX4N/4F50N Case Cover To Case (Beaded) 2000-03	1	YF3Z-7G303-AA
86324HB	Gasket, 4F50N Case Cover To Case (Silicone Beaded) 2004-Up	1	4F1Z-7G303-CA
86332	Lip Seal, AXOD/AXODE Direct & Interm. Clutch (Inner) (Except AXODE With SHO) 1986-93	2	F3DZ-7G240-A
86332E	D-Ring, AXODE/AX4S/AX4N Direct & Interm. Clutch (Inner) (AXODE With SHO) 1993-Up	2	F3DZ-7F225-A
86333	Lip Seal, AXOD/AXODE/AX4S Intermediate & Forward Clutch (Outer) 1986-Up	2	E6DZ-7F224-A

FORD

© Whatever It Takes Transmission Parts. Inc.

PART #	GASKETS & RUBBER COMPONENTS (Continued)	QTY.	REFERENCE #
86334	O-Ring, AXOD/AXODE/AX4S/AX4N Direct & Intermediate Clutch Hub (.072" Thick)(2 3/4"OD)	2	E6DZ-7G102-A
86336	Lip Seal, AXOD/AXODE/AX4S/AX4N Forward Clutch (Inner) 1986-Up	1	E6DZ-7A548-B
86337	Lip Seal, AXOD/AXODE/AX4S Direct Clutch (Outer) 1986-Up	1	E6DZ-7A548-A
86338	Lip Seal, AXOD/AXODE/AX4S/AX4N Reverse Clutch (Inner) 1986-Up	1	E6DZ-7D404-A
86339	Lip Seal, AXOD/AXODE/AX4S/AX4N Reverse Clutch (Outer) 1986-Up	1	E6DZ-7D403-A
86345	O-Ring, AXOD Governor Cover 1986-90	1	803201-S
86351H	O-Ring, AX4N Neutral-Drive Accumulator Cover 1995-Up	1	F5DZ-7H277-A
86352	Lathe Cut Seal, AXOD/AXODE/AX4S 1-2 Accumulator Piston 1986-96	1	E6DZ-7G095-A
86352H	Lathe Cut Seal, AX4N 1-2, 3-4 & Neutral-Drive Accumulator Pistons 1995-Up	3	F5DZ-7G095-A
86353	O-Ring, AXOD/AXODE/AX4S N-D Accumulator Piston (.104" Thick)(2"OD)1986-96	1	E6DZ-7G275-A
86354	Lathe Cut Seal, AXOD/AXODE/AX4S/AX4N 3-4 Accumulator Piston 1986-Up	1	E6DZ-7F248-A
86355H	O-Ring, AX4N Reverse Accumulator Piston 1995-Up	1	F5DZ-7H274-A
86361	O-Ring, AXOD/AXODE/AX4S Low / Intermediate Servo Piston 1986-Up	1	E6DZ-7D025-A
86362	O-Ring, AXOD/AXODE/AX4S Low / Intermediate Servo Cover 1986-Up	1	E6DZ-7D040-A
86367	Seal, AXOD/AXODE/AX4S Overdrive Servo Cover (Thick Wall) 1986-Up	1	E6DZ-7D024-A
86367A	Seal, AXOD/AXODE/AX4S/AX4N Overdrive Servo Cover (Thin Wall) 1986-Up	1	E6DZ-7D024-B
44371B	Boot, AXOD/AXODE/AX4S/AX4N Filler Tube 1986-Up	1	6264902
86373	Boot, AXOD Detent Cable 1986-91	1	E6DZ-7F429-A
86376	O-Ring, AXOD/AXODE/AX4S/AX4N TCC & Shift Solenoids (Outer) 1986-Up	1-4	F1DZ-7Z484-A
86376A	O-Ring, AXODE/AX4S/AX4N TCC & Shift Solenoids (Inner) 1991-Up	1-4	F1DZ-7Z484-B
86376B	O-Ring, AX4N EPC Solenoid (Outer) 1995-Up	1	F1DZ-7Z144-A
86376C	O-Ring, AX4N EPC Solenoid (Inner) 1995-Up	1	F1DZ-7Z144-B
86379	O-Ring, AXOD Oil Filter 1986-E88	2	E6DZ-7A469-A
86380	O-Ring, AXOD/AXODE Turbine Shaft (For 23 Spline Shaft) 1986-E93	1	87022-S96
86380A	O-Ring, AXODE/AX4S/AX4N Turbine Shaft (For 25 Spline Shaft) L1993-Up	1	
86383A	Seal, AXOD/AXODE Rear Lube Tube To Case (.405" Long) 1st Design 1986-E93	1	E6DZ-7G085-A
86383AA	Seal, AXODE/AX4S Rear Lube Tube To Case (.357" Long) 2nd Design L93-Up	1	F8DZ-7G085-AA
86383E	Seal, AXODE/AX4S Rear Lube Tube To Differential Support (3rd Design) 1992-Up	1	F3DZ-7G085-A
86383H	Seal, AX4N Rear Lube Tube & Differential Support Lube Tube 1995-Up	2	F5DZ-7G085-A
103368	O-Ring, AXOD/AXODE Speed-O Sleeve(Inner)	1	

PART #	TECHNICAL MANUALS	QTY.	REFERENCE #
86400	Technical Manual, AXOD 1986-90 (ATSG)	1	83-AXODTM
86400E	Technical Manual, AXODE/AX4S 1991-Up (ATSG)	1	83-AXODETM
A86400E	Rebuild Manual, AXODE/AX4S Rebuild Procedures (ATRA)	1	
A86400ED	Diagnostic Manual, AX4S ("Are They Really That Tough") (ATRA)	1	
86400EH	Technical Manual, AXOD/AXODE/AX4S Update Handbook 1986-Up (ATSG)	1	83-AXODTM-U1
86400H	Technical Manual, AX4N 1995-Up (ATSG)	1	
86407A	Technical Video, AXOD With Manual 1986-90	1	83-SGVT-2
86407E	Technical Video, AXODE/AX4S With Manual 1991-Up	1	83-SGVT-23

PART #	ELECTRICAL COMPONENTS	QTY.	REFERENCE #
86410	Switch, AXOD Neutral Safety 1986-10/87	1	E6DZ-7A247-A
86410A	Switch, AXOD Neutral Safety (6 Prong) 11/87-90	1	E8DZ-7A247-A
86410E	Switch, AXODE Neutral Safety (8 Prong) 1991-92	1	F2DZ-7A247-A
86410EA	Switch, AXODE/AX4S/AX4N Neutral Safety (8 Prong) 1993-97	1	F5DZ-7F293-BA
86410EB	Switch, AX4S,AX4N Neutral Safety (10 Prong) 1998-Up	1	
86410EC	Switch, AX4S,AX4N Neutral Safety (11 Prong) 1998-Up	1	
86411	Switch, AXOD Pump Oil Pressure 1986-Up	1	E6DZ-7E440-B
86412	Switch, AXOD 3-2 & 4-3 pressure Switch 1986-Up	1	E6DZ-7E440-A
86414	Switch AXODE Neutral Pressure Switch 1991-Up	1	
86420	Solenoid, AXODE/AX4S Shift (1-2, 2-3, 3-4) 1991-Up (Can Use 86420H)	3	F1DZ-7G484-A
T86420K	Solenoid Master Kit, AXODE/AX4S/AX4N (Contains: 1 Lock-Up, 3 Shift & 1 EPC) 1991-97 Continental & All 1992-97 (Teckpak)	1	MS-AXODE-91
T86420AK	Solenoid Master Kit, AXODE (Contains: 1 Lock-Up, 3 Shift & 1 EPC) (Taurus, Sable) 1991(Teckpak)	1	MS-AXODE-91
86420H	Solenoid, AX4N Shift (1-2, 2-3, 3-4) 1995-Up (Can Use 86420)	3	F3DZ-7G484-AA
86425	Solenoid, AXOD Lock-Up (Square Body) (Non Electronic) 1986-90	1	E6DZ-7G136-A
86425A	Solenoid, AXODE Lock-Up (Square Body) (Taurus, Sable) 1991 (Can Use 86425)	1	F1DZ-7G136-A
86425B	Solenoid, AXODE/AX4S Modulated Lock-Up (White) 1991Lincolns & All 1992-Up (Also Fits AX4N 1995-96)	1	F3DZ-7G136-A
86425H	Solenoid, AXODE/AX4S/AX4N Modulated Lock-Up (Blue) 1997-Up	1	F7OZ-7G136-AA
86431	Solenoid, AXODE/AX4S EPC (Electronic Press Control) 1995-Up	1	F6DZ-7G383-BA
86431HA	Solenoid, AX4N EPC (Electronic Press Control) 1995-Up	1	F6DZ-7G383-AA
86436A	Sensor, AXODE/AX4S VSS (Except SHO) 1991-Up (Use 86774)	1	

© Whatever It Takes Transmission Parts. Inc.

86774B	Speed-O Housing, AXOD/AXODE With Sensor (2 Pin Connector) (2.14 OHMS) Does Not Use A Cable 1986-Up	1	E9LZ-9E731-A
86774C	Speed-O Housing, AXOD/AXODE With Sensor (2 Pin Connector) Uses A Cable 1986-Up	1	E9TZ-9E731-A
86774H	Speed-O Housing, AX4N With Sensor (2 Pin Connector) 1995-99	1	F5DZ-9E731-BA
86436G	Sensor, AX4S VSS (Vehicle Speed Sensor) L1999-Up	1	XF2Z-7H103-AA
86436H	Sensor, AX4N VSS (Vehicle Speed Sensor) 2000-Up	1	YF1Z-7H103-AA
86436HA	Sensor, 4F50N VSS (For Digital Dash Speed-O) 2004-Up	1	
86437	Sensor, AXODE/AX4S/AX4N TOT / TFT (Transmission Oil Temperature) 1991-Up	1	F1DZ-7H141-A
86438	Sensor, AXODE/AX4S TSS (Turbine Speed Sensor) 1991-00	1	F1DZ-7M101-A
86438A	Sensor, AX4S TSS (Turbine Speed Sensor) 2001-03	1	
86438H	Sensor, AX4N TSS (Turbine Speed Sensor) 1995-00	1	F5DZ-7M101-A
86438HA	Sensor, AX4N TSS (Turbine Speed Sensor) 2001-Up	1	1F1Z-7M101-AA
86445E	Wire Harness, AXODE External (9 Prong) With 3 Case Connectors (1 Gray 5 Prong & 1 White 4 Prong)	1	
86445EK	Repair Kit, AXODE External Wire Harness (White) Plugs Into Connector 1991-92	1	
86445EAK	Repair Kit, AXODE External Wire Harness (Black) Plugs Into Connector 1991-92	1	
86445EBK	Repair Kit, AXODE/AX4S/AX4N External Wire Harness (Rostra)	1	
86445ECK	Repair Kit, AXOD/AXODE/AX4N Speed Sensor Wire Harness Connector (Fits 36438, 36774D, 86774B, 86774C, 86774H, F85Z-2L373AB)	1	
86446	Wire Harness, AXOD Internal 3.0L (Non Electronic) 1986-90	1	E6DZ-7G276-A
86446A	Wire Harness, AXOD Internal 3.8L (Non Electronic) 1986-90	1	E8DZ-7G276-A
86446E	Wire Harness, AXODE Internal (White Case Connector) 1991-92	1	F1DZ-7G276-A
86446EA	Wire Harness, AXODE Internal (Black Case Connector) 1991-92	1	F1DZ-7G276-B
86446EB	Wire Harness, AXODE/AX4S Internal (Grey Case Connector) (9 Prong) 1993-05 (Black & White Wires Intertwined)	1	F10Y-7G276-A
86446EC	Wire Harness, AXOD/AXODE Internal (Gray Case Connector) (6 Prong) (Lincoln Top Mount) 1991-92	1	F1DY-7G276-A
86446HA	Wire Harness, AX4N Internal 1995-03	1	F5DZ-7G276-A
86446HB	Wire Harness, AX4N/4F50N Internal With Case Connector 2004-Up	1	
26487A	Grommet, AX4S/AX4N Linkage Grommet (5/8"ID)	1	
86490-1G	Vent Cap, AXODE/AX4S/AX4N (Rubber)(Fits On The 86490G Vent Tube) 1995-99 (This Retro Fits The Later Vent Tube With The Metal Cap)(Must Use D86490G & D86490-1G Together)	1	
86490G	Vent Tube, AXODE/AX4S/AX4N (Metal)(Presses In Case Cover)(Uses A Rubber Cap #86490-1G) 1995-99 (This Retro Fits The Later Vent Tube With Metal Cap)(Must Use D86490G & D86490-1G Together)	1	
86490H	Vent, AX4N Case 2000-Up	1	

PART #	HARD PARTS	QTY.	REFERENCE #
86500	Pump Assembly, AXOD With Seperator Plate (RFF6) 1986	1	E6DZ-7A103-A
86500A	Pump Assembly, AXOD With Seperator Plate (RFE6) 1987	1	E7DZ-7A103-B
86500AA	Pump Assembly, AXOD With Seperator Plate (RFE8) 1987-88	1	E8DZ-7A103-A
86500AB	Pump Assembly, AXOD With Seperator Plate (RFE8) 1989	1	
86500AC	Pump Assembly, AXOD With Seperator Plate (RFE8) 1990	1	
86500AD	Pump Assembly, AXOD With Seperator Plate (RFE9) 1990	1	E8DZ-7A103-B
86500D	Pump Assembly, AXODE With Seperator Plate (RFF1) (Taurus, Sable) 1991 (The Lock-up Solenoid Has A Square Body)	1	
86500E	Pump Assembly, AXODE With Seperator Plate (RFF1) 1992-Up (The Modulated Lock-Up Solenoid Has A Round Body With Neutral Connector) (If The Connector Is Blue Use 86500GD)	1	
86500GD	Pump Assembly, AX4S With Seperator Plate (RFF1)(The Modulated Lock-Up Solenoid Has A Round Body With Blue Connector)	1	
86500H	Pump Assembly, AX4N (RFF4DP-7B324-AA) (With 5 Solenoids) 1995-97	1	
86500HA	Pump Assembly, AX4N/4F50N (Cast # RFF4DP) (With 5 Solenoids)	1	
86500HAA	Pump Assembly, AX4N/4F50N (Cast # RF4F1P) (With 5 Solenoids) 2004-Up	1	
86500HB	Pump Assembly, AX4N/4F50N (Cast # RFXF1P Or RFF8DP)	1	
86520	Cover, AXOD/AXODE/AX4S/AX4N Pump (7075-T6 Aircraft Aluminum) 1986-Up	1	F4DZ-7G187-A
86529	Converter Reactor, AXOD/AXODE/AX4S (With 3 Holes For Washer # 86278) (The 3 Holes Are Not Equal Distance From Each Other) (Can Use 86529A) 1986-Up	1	E6DZ-7A108-A
86529A	Converter Reactor, AX4N (With 4 Holes Where Washer # 86278A Sets) 1995-Up (Retro Fits AXOD/AXODE/AX4S)	1	
86529AA	Converter Reactor, AX4N (With 3 Holes For Washer # 86278A) 3 5/8" Tall (The 3 Holes Are Equal Distance From Each Other) (Can Use 86529A) 1995-Up	1	
86529H	Converter Reactor, 4F50N (4" Tall) 2004-Up	1	3F2Z-7A108-AA
86531	Rotor Kit, AXOD/AXODE/AX4S/AX4N Pump 1986-Up	1	K86880
86532	Rotor, AXOD/AXODE/AX4S/AX4N Pump 1986-Up	1	
86532K	Rotor W/Vanes & Rings, AXOD/AXODE/AX4S/AX4N Pump 1986-Up	1	
86533	Vane, AXOD/AXODE/AX4S/AX4N Pump 1986-Up	7	
86534	Slide, AXOD/AXODE/AX4S/AX4N Pump 1986-Up	1	E6DZ-7R194-AA
86538	Ring, AXOD/AXODE/AX4S/AX4N Pump Vane 1986-Up	2	F0DZ-7G287-A
86550	Drum, AXOD/AXODE Overdrive (6 Lugs For Shell) 1986-91	1	E6DZ-7L669-A

© Whatever It Takes Transmission Parts. Inc.

PART #	HARD PARTS (Continued)	QTY.	REFERENCE #
86550A	Drum, AXODE/AX4S/AX4N Overdrive (36 Lugs For Shell) 1992-Up	1	
86552A	Drum, AXOD/AXODE Direct & Intermediate Clutch (.344" Long Splines For Forward Clutch Drum) All Except SHO 1986-95	1	E6DZ-7G120-A
86552B	Drum, AXODE/AX4S Direct & Intermediate Clutch (.450" Long Splines For Forward Clutch Drum) (Does Not Use Molded Piston) (Except SHO)	1	F6DZ-7G120-A
86552H	Drum, AX4S/AX4N Direct & Intermediate Clutch (Uses Molded Pistons) (All Except SHO)	1	F5DZ-7G120-A
86554A	Drum, AXOD/AXODE Forward (With .410" Thick Splines On ID) (2.480" Overall Height, Measured Down Through The Center) 1986-96	1	F6DZ-7A360-BA
86554AA	Drum, AXODE/AX4S Forward (With .505" Thick Splines On ID) (2.480" Overall Height, Measured Down Through The Center) 1994-Up	1	E6DZ-7A360-A
86554B	Drum, AXOD/AXODE Forward (Fits SHO Taurus Only) 1991-96	1	
86554H	Drum, AX4N/AX4S Forward (With .410" Thick Splines On ID) (2.300" Overall Height, Measured Down Through The Center) 1995-Up	1	F5DZ-7A360-A
86556	Drum, AXOD/AXODE/AX4S Reverse (.360"OD Oil Hole) 1986-Up	1	E6DZ-7F341-A
86556H	Drum, AX4N Reverse Clutch (.440"OD Oil Hole) 1995-Up	1	F5DZ-7F341-A
86559	Drum, AXOD/AXODE Low With Sun Gear 1986-91	1	E6DZ-7A626-AA
86559A	Drum, AXODE/AX4S Low With Sun Gear (With 3 Slotted Holes) (Can Use 86559) 1992-96	1	F6DZ-7A626-AA
86559H	Drum, AX4N Coast With Sun Gear (With Needle Bearing) 1995-07	1	F5DZ-7A626-A
86562	Piston Kit, AXOD/AXODE/AX4S Intermediate Clutch 1986-Up	1	
86562H	Piston Kit, AX4N Intermediate Clutch 1995-Up	1	
86564	Piston Kit, AXOD/AXODE/AX4S Forward Clutch 1986-Up	1	
86564H	Piston Kit, AX4N Forward Clutch (Bonded Piston) 1994-97	1	
86564HA	Piston Kit, AX4N Forward Clutch (Bonded Piston) 1998-Up	1	
86565	Piston Kit, AXOD/AXOD/AX4S Direct Drum 1986-Up	1	
86565H	Piston Kit, AX4N Direct Clutch 1995-Up	1	
86566	Piston Kit, AXOD/AXODE/AX4S/AX4N Reverse Clutch 1986-Up	1	
86567H	Piston Kit, AX4N Low / Intermediate Clutch 1995-Up	1	
86572	Clutch Hub, AXOD Intermediate (13/16" Clutch Splines) 1986-87	1	E6DZ-7B067-A
86572A	Clutch Hub, AXOD/AXODE/AX4S Intermediate (7/8" Clutch Splines) 1988-95	1	E8DZ-7B067-A
86572AA	Clutch Hub, AXOD/AXODE/AX4S Intermediate (15/16" Clutch Splines) 1988-95	1	1F1Z-7B067-BA
86572B	Clutch Hub, AX4S/AX4N Intermediate (1" Clutch Splines) 1994-Up (Can 86572C)	1	F3DZ-7B067-A
86572C	Clutch Hub, AX4N Intermediate (1 1/16" Clutch Splines) 1995-Up	1	F6DZ-7B067-A
86572D	Clutch Hub, AX4N/4F50N Intermediate (1 1/8" Clutch Splines) 1998-Up	1	
86575	Clutch Hub, AXOD Direct Overrun Clutch (.740" Thick) 1986-90	1	E6DZ-7D171-B
86575A	Clutch Hub, AXODE/AX4N Direct Overrun Clutch (.830" Thick) 1991-Up	1	F5DZ-7D171-A
86577H	Clutch Hub & Outer Race, AX4N Low/Intermediate Clutch 1995-Up	1	F8DZ-7D171-AA
86582	Planet, AXOD Front (With Bushing Inside Of Shaft) 1986-90	1	
86582A	Planet, AXOD Front (With Bearing Inside Of Shaft) (Sun Gear Has 2 Bushings Inside) 1986-90	1	
86582AK	Planet Kit, AXOD/AXODE/AX4S (Front Planet & 6 Lug Sun Shell) 1986-96	1	F4DZ-7A398-A
86582B	Planet, AXODE/AX4S Front (With Bearing Inside Of Shaft) (Sun Gear Has 1 Bushing Inside) 1992-Up	1	
86582H	Planet, AX4N Front (Has 4 Large Pins Through Gears & 4 Small Pins Through Housing) 1995-Up	1	F5DZ-7A398-BA
86583	Planet Assembly, AXOD (Front/Rear/Sun Shell/Ring Gear) 1986-90	1	
86583A	Planet Assembly, AXOD/AXODE/AX4S (Front/Rear/Sun Shell/Ring Gear) Bearing Type (Shell Has 2 Bushings Inside) 1986-96	1	
86583B	Planet Assembly, AXOD/AXODE/AX4S (Front/Rear/Sun Shell/Ring Gear) Bearing Type (Shell Has 1 Bushing Inside) With 6 Lug Sun Gear 1986-96	1	
86583C	Planet Assembly, AXODE/AX4S (Front/Rear/Sun Shell/Ring Gear) Bearing Type (With 36 Lug Sun Shell) 1995-Up (Rear Planet Has 33 Internal Splines)	1	
86583G	Planet Assembly, AX4S (Front/Rear/Sun Shell/Ring Gear) Bearing Tyoe 2001-Up (With 36 Lug Sun Shell) (Rear Planet Has 45 Internal Splines)	1	
86583H	Planet Assembly, AX4N (Front/Rear/Sun Shell/Ring Gear) 1995-Up	1	
86584	Planet, AXOD/AXODE/AX4S Rear (33 Internal Splines) 1986-Up	1	E6DZ-7D006-A
86584G	Planet, AX4S Rear (45 Internal Splines) 2001-Up	1	
86584H	Planet, AX4N Rear 1995-Up	1	F4DZ-7D006-A
86594	Ring Gear, AXOD/AXODE/AX4S/AX4N Rear Planet 1986-Up	1	E6DZ-7A153-A
86598	Ring Gear, AXOD/AXODE/AX4S Final Drive Planet (17 Lugs) 1986-Up	1	E6DZ-7F343-A
86598G	Ring Gear, AX4S Final Drive Planet (23 Lugs)(74 Teeth) 2002-Up	1	2F1Z-7F343-AA
86598GA	Ring Gear, AX4S Final Drive Planet (23 Lugs)(71 Teeth) 2001-Up	1	
86598H	Ring Gear, AX4N Final Drive Planet (25 Lugs) 1995-2000	1	F4DZ-7A343-A
86598HA	Ring Gear, AX4N Final Drive Planet (32 Lugs) (74 Teeth) 2001-Up	1	
86598HB	Ring Gear, AX4N Final Drive Planet (32 Lugs) (71 Teeth) 2001-Up	1	
86618	Sun Gear, AXOD/AXODE/AX4S Final Drive Planet (30 Teeth) 4 1/8" Long (33 Splines) 1986-Up	1	E6DZ-7F342-A
86618A	Sun Gear, AX4S Final Drive Planet (30 Teeth) 4 1/8" Long (45 Splines) 2001-Up	1	
86618B	Sun Gear, AX4S Final Drive Planet (29 Teeth)(4 1/8" Long)(45 Splines) 2002-Up (Used With 5 Gear Final Drive Planet)	1	

© Whatever It Takes Transmission Parts. Inc.

86618H	Sun Gear, AX4N Final Drive (30 Teeth) (5 1/4" Long) 1995-Up	1	F5DZ-7F342-A
86618HA	Sun Gear, 4F50N Final Drive (29 Teeth) (5 1/4" Long) (Used With 5 Gear Final Drive) 2001-Up	1	1F2Z-7F342-AA
86620	Shell, AXOD/AXODE With Sun Gear (6 Lugs, 2 Bushings) 1986-96	1	E6DZ-7D064-A
86620A	Shell, AXODE With Sun Gear (36 Lugs, 2 Bushings) 1993-Up	1	
86620AA	Shell, AXOD/AXODE With Sun Gear (6 Lugs, 1 Bushing) 1986-96	1	
86620B	Shell, AXODE/AX4S/AX4N With Sun Gear (36 Lugs, 1 Bushing) 1993-Up	1	F5DZ-7D064-A

PART #	SPRAGS & ONE WAY CLUTCHES	QTY.	REFERENCE #
86652H	One Way Clutch, AX4N Low / Intermediate (Spring, Roller Cage) (7 Tab) 1995-Up	1	F5DZ-7A089-AB
86656	Sprag, AXOD/AXODE/AX4S Direct (.500" Wide Cage) Blue Plastic 1986-Up (Replaces Metal)	1	E6DZ-7A089-B
86656A	Sprag, AXODE/AX4S/AX4N Direct (.590" Wide Cage) Grey Plastic 1992-Up (Can Use 36650BA)	1	F3DZ-7A089-B
86658	Sprag, AXOD Low Clutch (16 Lugs) 1986-90 (Use 86658A)	1	E6DZ-7A089-A
86658A	Sprag, AXOD/AXODE/AX4S/AX4N Low Clutch (26 Lugs) 1986-Up	1	F2TZ-7A089-A
86658B	Sprag, AXOD/AXODE/AX4S/AX4N Low Clutch (30 Lugs) (Retro Fits The 26 Lug)	1	

PART #	HARD PARTS (Continued)	QTY.	REFERENCE #
86666	Inner Race, AXOD/AXODE Direct Overrun Clutch (6 Lug) 1986-92	1	E6DZ-7G156-A
86666A	Inner Race, AXODE/AX4S/AX4N Direct Overrun Clutch (36 Lugs) (1/2" Wide Bushing) 1992-Up	1	F5DZ-7G156-A
86666H	Inner Race, AX4N Direct Overrun Clutch (36 Lugs) (5/8" Wide Bushing)	1	F5DZ-7G156-C
86669	Outer Race, AXOD Overrun Clutch (.500" Thick) (52 Teeth) 1986-90	1	E6DZ-7D171-A
86669A	Outer Race, AXODE/AX4S/AX4N Overrun Clutch (.720" Thick) (57 Teeth) 1991-Up	1	E6DZ-7B328-A
86671	Pump Shaft, AXOD/AXODE/AX4S/AX4N Oil Pump Drive 1986-Up	1	E6DZ-7B328-A
86671A	Pump Shaft, AX4S/AX4N 1998-Up (This # Now Retros Back To 1986)	1	F8DZ-7B328-AA
86673	Turbine Shaft, AXOD/AXODE (1 1/16" Long Splines) 23 Splines On Converter End 1986-E93	1	E6DZ-7F213-A
86673A	Turbine Shaft, AXOD/AXODE (7/8" Long Splines) 23 Splines On Converter End 1986-E96	1	
86673B	Turbine Shaft, AXODE/AX4S/AX4N (25 Splines On Converter End) L1993-Up	1	F4DZ-7F213-A
86678	Output Shaft, AXOD/AXODE/AX4S (18" Long) 35 Splines On Differential End 1986-Up	1	E6DZ-7060-A
86678HA	Output Shaft, AX4N (19 1/4" Long) 35 Splines On Differential End 1995-Up	1	F5DZ-7060-A
86680	Governor Assembly, AXOD 1986-90	1	E6DZ-7C053-A
86680A	Governor Assembly, AXODE/AX4S (13 Teeth Gear, Electronic, No Weights) 1991-Up	1	E8DZ-7C053-B
86683	Gear, AXOD/AXODE/AX4S Governor Drive (42 Teeth) (White Plastic) 1986-Up	1	E7DZ-7G237-A
86683A	Gear, AXOD/AXODE/AX4S Governor Drive (24 Teeth) 1986-Up	1	
86683H	Gear, AX4N Governor Drive (24 Teeth) (Black Plastic) 1995-Up	1	F5DZ-7G237-A
86686	Cover, AXOD/AXODE/AX4S Governor 1986-99	1	F6DZ-7A301-A
86686G	Cover, AX4S Governor 2000-Up	1	
86690	Gear, AXOD/AXODE/AX4S Parking (With Straight Inner Splines) 1986-Up	1	E6DZ-7A233-A
86690H	Gear, AX4N Parking (With 30 Spiral Inner Splines) 1995-Up	1	F5DZ-7A233-A
86690HA	Gear, AX4N Parking (With 29 Spiral Inner Splines) 1995-Up	1	1F2Z-7A233-AA
86700	Chain, AXOD/AXODE/AX4S/AX4N (.650" Sprocket) Multi-Flex (43 Links) 1986-Up	1	E6DZ-7G249-A
86700A	Chain, AXOD/AXODE (.770" Sprocket) Multi-Flex (43 Links) 1986-Up	1	E8DZ-7G249-B
86700B	Chain, AXODE/AX4S/AX4N (.650" Sprocket) Non Flex (43 Links) 1991-Up	1	
86700G	Chain, AX4S/AX4N (.650" Sprocket) Multi-Flex (44 Links) 1995-Up	1	
86700H	Chain, AX4N (.770 Sprocket) Non-Flex (44 Links) 1995-Up	1	
86700HA	Chain, AX4N (.650" Sprocket) Non-Flex (43 Links) 2004-Up (For 2.5L & 3.0L Vulcan & Duratec Engines) (Also Retro-Fits AXODE/AX4S/AX4N 1991-Up)	1	4F1Z-7G249-AA
86700HB	Chain, 4F50N 2005-Up (44 Links) (2 Copper Links) (3.9L Engine)	1	
86705BA	Sprocket, AXOD Drive (34 Teeth) .650" Wide Teeth (3.890"OD) 1986-91	1	
86705BB	Sprocket, AXODE/AX4S/AX4N Drive (34 Teeth).650" Wide Teeth (3.820"OD) (Cast # RFF8) 1991-Up	1	
86705CA	Sprocket, AXOD/AX4N Drive (35 Teeth) .650" Wide Teeth (4.012"OD) 1986-Up	1	E6DZ-7G129-A
86705CB	Sprocket, AXODE/AX4S Drive (35 Teeth).650" Wide Teeth (3.950"OD) 1992-96	1	E8DZ-7G129-B
86705DA	Sprocket, AXOD Drive (37 Teeth) (.650" Wide Teeth) 1986-91	1	
86705EA	Sprocket, AXODE/AX4S Drive (37 Teeth) .650" Wide Teeth (4.250"OD) 1992-96	1	E9DZ-7G129-A
86705GA	Sprocket, AXODE/AX4S/AX4N Drive (38 Teeth) .650" Wide Teeth (4.380"OD) 1992-96	1	
86705GB	Sprocket, AXOD Drive (38 Teeth) .770" Wide Teeth (4.380"OD) 1986-91	1	
86705GH	Sprocket, AX4N Drive (38 Teeth) .770" Wide Teeth (4.300"OD) 1995-Up	1	
86705HA	Sprocket, AXOD Drive (39 Teeth) .650" Wide Teeth (4.423"OD) 1986-91	1	
86705HB	Sprocket, AX4N Drive (41 Teeth) .650" Wide Teeth (4.460"OD) 1995-Up	1	
86706BC	Sprocket, AXODE/AX4S Driven (34 Teeth) .650" Wide Teeth (3.830"OD) 1992-Up	1	
86706CA	Sprocket, AXOD Driven (35 Teeth) .650" Wide Teeth (4.015"OD) 1986-91	1	E6DZ-7G132-A
86706CB	Sprocket, AXOD Driven (35 Teeth).770" Wide Teeth (4.015"OD) 1986-91	1	
86706CC	Sprocket, AXODE/AX4S Driven (35 Teeth) .650" Wide Teeth (4.015"OD) 1992-Up	1	
86706CD	Sprocket, AXODE/AX4S Driven (35 Teeth) .770" Wide Teeth (4.015"OD) 1992-Up	1	E9DZ-7G132-A
86706DA	Sprocket, AXOD Driven (36 Teeth) .650" Wide Teeth (4.135"OD) 1986-91	1	E8DZ-7G132-A
86706DC	Sprocket, AXODE/AX4S Driven (36 Teeth) .650" Wide Teeth (4.135"OD) 1992-Up	1	
86706GC	Sprocket, AXODE/AX4S Driven (38 Teeth) .650" Wide Teeth (4.306"OD) 1992-Up	1	

© Whatever It Takes Transmission Parts. Inc.

PART #	HARD PARTS (Continued)	QTY.	REFERENCE #
86706GD	Sprocket, AXODE/AX4S/AX4N Driven (38 Teeth).650" Wide Teeth (4.375"OD) 1992-Up	1	
86706GE	Sprocket, AXODE/AX4S Driven (38 Teeth) .650" Wide Teeth (4.490"OD) 1992-Up	1	
86706HB	Sprocket, AXOD Driven (39 Teeth) .770" Wide Teeth (4.420"OD) 1986-91	1	
86706HC	Sprocket, AXODE/AX4S Driven (39 Teeth) .650" Wide Teeth (4.492"OD) 1992-Up	1	
86706HE	Sprocket, AXODE/AX4S/AX4N Driven (39 Teeth) .650" Wide Teeth (4.420"OD) 1995-Up	1	
86713	Support, AXOD/AXODE/AX4S Driven Sprocket (Cast # RFE6SP-7G168-AA Or RFF4-7G168-BA) 1986-Up	1	E6DZ-7F203-B
86713H	Support, AX4N Driven Sprocket (Cast # RFF4-7G168-AB) 1995-Up	1	F5DZ-7G166-A
86713HN	Support, 4F50N Sprocket (Cast # 4F1P-7G404-DA) 2004-Up	1	
86715	Differential, AXOD/AXODE/AX4S/AX4N (35 Spline Axles) Less Speed-O Gear 1986-Up	1	E6DZ-7F465-A
86715H	Differential, AX4N (34 Spline Axles) Less Speed-O Gear (4 Gear Planet) 1995-Up (Use 86715)	1	F5DZ-7F465-A
86715HB	Differential, 4F50N (5 Gear Planet) (Snap Ring Type) 2001-Up	1	
86724	Support, AXOD Differential (2 Bushing Type) 1986	1	E6DZ-7A130-A
86724A	Support, AXOD/AXODE Differential (1 Bushing Type) No Seal 1986-92	1	
86724B	Support, AXODE/AX4S Differential (1 Bushing Type) With Seal (Cast # RFE9) (No Notch For Speed Sensor) With Seal 1993-99	1	E3DZ-7A130-A
86724BA	Support, AX4S Differential (1 Bushing Type) (Cast # RFYF2P or RFE9) With Notch For A Speed Sensor 2000-Up	1	YF2Z-7A103-AA
86724H	Support, AX4N Differential (Low/Intermediate Clutch Housing) (1.950" Tall) 1995	1	F5DZ-7A130-A
86724HA	Support, AX4N Differential (Low/Intermediate Clutch Housing) (1.850" Tall) (Cast # RFF6) 1996-98	1	F6DZ-7A130-CB
86724HB	Support, AX4N Differential (Low/Intermediate Clutch Housing) (1.850" Tall) (Cast # RFX3P) 1999-2000	1	XF3Z-7A130-AA
86724HC	Support, AX4N/4F50N Differential (Low/Intermediate Clutch Housing) (1.850" Tall) (Cast # RF1F1) 2001-Up	1	1F1Z-7A130-BA
86740AA	Valve Body, AXOD (RFE6) With Seperator Plate 1986	1	E6DZ-7A100-A
86740AB	Valve Body, AXOD (RFE7) With Seperator Plate 1986	1	
86740AC	Valve Body, AXOD (RFE7) With Seperator Plate 1987	1	E7DZ-7A100-A
86740AD	Valve Body, AXOD (RFE7) With Seperator Plate 1988	1	
86740AE	Valve Body, AXOD (RF86) With Seperator Plate 1988	1	E8DZ-7A100-B
86740AG	Valve Body, AXOD (RF86) With Seperator Plate 1989	1	
86740AH	Valve Body, AXOD (RFE8) With Seperator Plate 1990	1	F0DZ-7A100-B
86740AJ	Valve Body, AXOD (RF96) With Seperator Plate 1989	1	
86740AL	Valve Body, AXOD (RF96) With Seperator Plate 1990	1	E9DZ-7A100-A
86740AN	Valve Body, AXODE (RFF1) With Seperator Plate 1991 (With 90 Casting)	1	E9OY-7A100-B
86740B	Valve Body, AXODE (RFF1) With Seperator Plate 1991 (With 91 Casting)	1	
86740BA	Valve Body, AXODE (RFF1) With Seperator Plate 1992-93	1	
86740BB	Valve Body, AXODE (RFF3) With Seperator Plate 1992	1	
86740BC	Valve Body, AXODE/AX4S (RFF48P) With Seperator Plate 1994-95 (The Converter Clutch Regulator Valve Has 1 Spring On The Top & The Retainer , Under This Valve Is The Shift Solenoid Regulator Vavle With 1 Spring & Retainer)	1	
86740BCK	Valve Body/Pump/Channel Plate Assembly, AXODE/AX4S With Seperator Plate 1994-95 (The Converter Clutch Regulator Valve Has 1 Spring On Top & The Retainer) Valve Body Cast # RFF48P (This Is A Matched Set)	1	
86740BCA	Valve Body, AXODE/AX4S (RFF48P) With Seperator Plate 1995-99 (The Converter Clutch Regulator Valve Has 2 Springs On The Top & The Retainer, Under This Valve Is The Shift Regulator Valve With 1 Spring And No Retainer)	1	
86740BD	Valve Body, AXODE (RFF4DP) With Seperator Plate 1994	1	
86740GD	Valve Body, AX4S (RFXF2P-7A092-AA) With Seperator Plate 2000-Up (Customer Must Use His Seperator Plate)	1	
86740H	Valve Body, AX4N (RFF4DP-7A092-DC) With Seperator Plate 1995-96 (Customer Must Use His Seperator Plate)	1	
86740HK	Valve Body/Pump/Channel Plate Assembly, AX4N With Seperator Plate 1995-96 (Valve Body Cast # RFF4DP-7A092-DC) This Is A Matched Set	1	
86740HA	Valve Body, AX4N (RFF4DP-7A092-AA) With Seperator Plate 1995-96 (Customer Must Use His Seperator Plate)	1	
86740HD	Valve Body, AX4N (RFF4DP-7B325-AA) With Seperator Plate 1997 (Customer Must Use His Seperator Plate)	1	F7DZ-7A100-A
86740HE	Valve Body, AX4N (RFF8DP-7A092-BA) With Seperator Plate 1997 (Customer Must Use His Seperator Plate)	1	
86740HG	Valve Body, AX4N (RFF8DP-7A092-BA) With Seperator Plate 1998 (Customer Must Use His Seperator Plate)	1	
86740HGK	Valve Body/Pump/Channel Plate Assembly, AX4N With Seperator Plate 1998 (Valve Body Cast # RFF8DP-7A092-BA) This Is A Matched Set	1	
86740HH	Valve Body, AX4N (RFXF1P-7A092-BA) With Seperator Plate 1998-03 (Fully Tested With S86741TAK & S86741HBK Installed)(Customer Must Use His Seperator Plate)	1	

© Whatever It Takes Transmission Parts. Inc.

86740HHK ..... Valve Body/Pump/Channel Plate Assembly, AX4N With Seperator Plate 1998-03 (Valve Body Cast # RFXF1P-7A092-BA)(This Is A Matched Set) 1

86740HJ ..... Valve Body, AX4N (RF4F1P-7A092-AF) With Seperator Plate 2003-Up (Customer Must Use His Seperator Plate) 1

PART #	VALVE BODY COMPONENTS	QTY.	REFERENCE #
76741-5	Check Ball, AXOD/AXODE/AX4S/AX4N Valve Body (.312" Or 5/16")(Steel) 1986-Up	AR	
76741A-1K	Relief Valve, AXODE (In Valve Body) (10 Per Kit) 1991-Up	1	
76741G-5	Check Ball, AXOD/AXODE/AX4S/AX4N Valve Body (.312" Or 5/16") (Torlon) 1986-Up	AR	
S86741A-2	Sleeve & Plunger, AXOD ByPass Clutch Control (TCC Apply) 1986-91 (Sonnax)	1	96201-06K
S86741B-2	Sleeve & Plunger Valve, AXODE/AX4S ByPass Clutch Control (TCC Apply) 1991-Up (Sonnax)	1	96206-01K
S86741BB-1	Valve & Spring, AXODE/AX4S Bypass Clutch Control Valve & Plunger Spring) Sonnax (Use T-96201-TL To Clean Up Bore)	1	
T-96201-TL	Reamer Kit, AXODE/AX4S Bypass Clutch Control Valve (For S86741BB-1) Contains: 1 Reamer, 1 Guide, 1 Bore Sizing Tool	1	
S86741BCK	Sure Cure Kit, AXODE 1991-Up (Sonnax)	1	SC-AXODE
S86741BHK	Valve & Plunger, AX4N ByPass Clutch Control (Oversize)(Contains: Valve, Plunger & Sleeve) (Sonnax)(Use T-96206-TL)	1	
T-96206-TL	Reamer, Jig & Sizing Tool For S86741BHK	1	
S86741CAK	Valve Kit, AXODE/AX4S/AX4N (OVersize) Solenoid Regulator Valve Spring & Inner Clip (Sonnax) Use T-96201-TL2 To Clean Up Bore	1	
T-96201-TL2	Reamer Kit, AXODE/AX4S/AX4N Solenoid Regulator Valve (Sonnax) (For S86741CAK) (Contains: 2 Reamers)	1	
S86741CBK	Valve Kit, AXODE/AX4S/AX4N (Oversize) Converter Regulator Valve, 2 Spring & 1 Inner Clip (Sonnax) Use T-96201-TL3 Tool To Clean Up Bore	1	
T-96201-TL3	Reamer Kit, AXODE/AX4S/AX4N Converter Regulator Valve (Sonnax) For S86741CBK (Contains: 2 Reamers)	1	
S86741D-4AK	Clip Set, AXOD/AXODE/AX4S/AX4N Valve Retainer (1 Hump Type) (10 Per Set) 1986-Up (Sonnax)	1	96201-11
S86741D-4K	Clip Set, AXOD/AXODE/AX4S/AX4N Valve Retainer (2 Hump Type) (10 Per Set) 1986-Up (Sonnax)	1	96201-10
A86741DB-3	Spring, 4F50N 2-3 Capacity Modulator Valve (Updated) 2004-Up	1	
A86741DH-3K	Spring Set, 4F50N 1-2 & 2-3 Capacity Modulator Valve (Fixes 3 Units) 2004-Up (Superior)	1	
A76741GA-5	Check Ball, AXOD/AXODE/AX4S/AX4N Valve Body (.312"OD)(5/16"OD)(Steel)	AR	
S86741GK	Valve Kit, AXODE/AX4S Forward Control (Valve & Spring)(Sonnax) (Use T-96201-BST Tool To Clean Up The Bore)	1	96201-16K
T-96201-BST	Tool, AXODE/AX4S Bore Sizing (For S86741GK)(Sonnax)	1	
T-96201-BST3	Tool, AXOD/AXODE/AX4S Bore Sizing For 1-2 Capacity Modulator Bore (Burnishes Any Ridges In Bore) Sonnax 1986-Up	1	
S86741HBK	Sleeve & Plunger Valve, AX4N ByPass Clutch Control (.486"OD)(Sonnax) 1995-Up	1	96206-03K
S86741HBAK	Sleeve & Plunger Valve, AX4N Bypass Clutch Control (.496"OD) (Sonnax)	1	
S86741HCK	Sure Cure Kit, AX4N (4F50N) (Sonnax) (Requires Tools # T-96206-TL, T-96201-TL3, T-96201-TL2 & T-96206-BST)	1	
86741HDK	Valve & Sleeve, AX4N Line Pressure Modulator (.427"OD) 1995-97	1	96948-01K
S86741HEK	Valve Kit, AX4N Accumulator Pressure Control Valve (Oversize) & Spring (Sonnax) (Use T-36948-TL To Clean Up Bore)	1	
T-36948-TL	Reamer Kit, AX4N Oversize Accumulator Valve (For S86741HEK) Sonnax (Contains: 2 Reamers & 1 Guide) Also For S36741E-1	1	
S86741HGK	Valve Kit, AX4N Forward Control (Valve & Spring) 1995-Up (Sonnax) (Use T-96206-BST Tool To Clean Up Bore)	1	96206-07K
T-96206-BST	Tool, AX4N Bore Sizing (For S86741HGK) 1995-Up (Sonnax)	1	
S86741M-1	Manual Valve, AXOD/AXODE/AX4S 1986-Up (Sonnax)	1	96201-05
S86741P-3K	Spring Kit, AXODE/AX4S/AX4N (Main Pressure Regulator) (Elevated Pressure) (20 Springs Per Kit) (Sonnax)	1	
S86741PAK	Valve & Springs, AXODE/AX4S Pressure Regulator Valve With 2 Springs (Oversize) Sonnax (Use T-96206-TL2 Reamer)	1	
T-96206-TL2	Reamer & Jig, For S86741PAK (Sonnax)	1	
S86741SA-4	Retainer, AXODE/AX4S 3-2 Shift Timing Valve Retainer 1991-Up (Sonnax)	1	96201-09
S86741SAK	Retainer Kit, AXODE/AX4S 3-2 Shift Timing Valve Cap & Retainer Clip (5 Each Per Kit) 1991-Up (Sonnax)	1	96201-15K
S86741SK	Valve & Retainer, AXODE/AX4S 3-2 Shift Timing Valve (Sonnax)	1	
S86741TAAK	Boost Valve & Sleeve, AXOD/AXODE/AX4S/AX4N (Factory Style) (3.8L/3.9L)(Sonnax)	1	96201-08K
S86741TAK	Boost Valve & Sleeve, AXOD/AXODE/AX4S/AX4N (With O-Rings) (3.0L) 1986-Up (Sonnax)	1	96201-12K
S86741TBK	Boost Valve & Sleeve, AXOD/AXODE/AX4S/AX4N (Factory Style) (3.0L) 1986-Up (Sonnax)	1	96201-13K
A86741TK	Boost Valve & Sleeve, AXOD/AXODE/AX4S/AX4N (O-Ring Type)(With O-Rings)(Aftermarket)	1	96201-01K
S86741TK	Boost Valve & Sleeve, AXOD/AXODE/AX4S/AX4N With O-Rings (3.4L SHO, 3.8L, 3.9L, 4.6L) (Sonnax)	1	

© Whatever It Takes Transmission Parts. Inc.

PART #	VALVE BODY COMPONENTS (Continued)	QTY.	REFERENCE #
86741V	Sleeve, AXOD/AXODE/AX4S/AX4N Valve Body (Steel) Valve Body To Pump Shaft Sleeve (Salvages Valve Body Worn Because Of Sealing Ring Cutting Into Bore)	1	
86741VA	Sleeve, AXOD/AXODE/AX4S/AX4N Valve Body (Steel) (Sonnax)	1	
86747AK	Plate Repair Kit, AXODE Valve Body & Pump Plate (With Plates, Gaskets & Check Balls) 1991 Taurus/Sable 3.8L	1	F1DZ-7A142-C
86747BK	Plate Repair Kit, AXODE Valve Body & Pump Plate (With Plates, Gaskets & Check Balls) 1991 Taurus/Sable 3.0L	1	F1DZ-7A142-B
86747CK	Plate Repair Kit, AXODE Valve Body & Pump Plate (With Plates, Gaskets & Check Balls) 1991 Police W/3.8L	1	F1OY-7A142-B
86747DK	Plate Repair Kit, AXODE Valve Body & Pump Plate (With Plates, Gaskets & Check Balls) 1991 Police W/3.8L	1	F1DZ-7A142-D
86747G	Plate, AX4S Valve Body 1994-Up (Use 86320G)	1	
86747H	Plate, AX4N Valve Body 1995-Up (Use 86320H)	1	

PART #	HARD PARTS (Continued)	QTY.	REFERENCE #
86755AA	Cover, AXOD Case (Cast #RFE6SP-7G234-AA) 1986	1	E6DZ-7G188-A
86755AB	Cover, AXOD Case (Cast #RFE7DP-7G234-AA) 1987	1	E7DZ-7G188-A
86755AC	Cover, AXOD Case (Cast #RFE8DP-7G234-AA) (1 Wire Harness Type) 1988-90	1	F3DZ-7G188-A
86755AD	Cover, AXOD Case (Cast #RFE8DP-7G234-AA) (2 Seperate Wire Harness Type) 1988-90	1	
86755AE	Cover, AXOD Case (Cast # REXP-171312) 1988-90	1	E8DZ-7G188-A
86755AG	Cover, AXOD Case (Cast # REXP-171345) 1988-90	1	F1DZ-7G188-A
86755AH	Cover, AXODE Case (Cast # RF-F1) 1991	1	
86755BA	Cover, AXODE Case (Cast # RF-F2) 1992	1	
86755BB	Cover, AXODE Case (Cast # RF-F3DP-7G234BA) (1 Wire Harness Type) 1991-92	1	
86755BC	Cover, AXODE Case (Cast # RF-F3DP-7G234AA) (2 Seperate Wire Harness Type) 1991-92	1	
86755BD	Cover, AXODE/AX4S Case (Cast # RFF4DP-7G234-BA) (1 Wire Harness Type) 1993-99	1	
86755BF	Cover, AXODE/AX4S Case (Cast # RFF6DP-7G234-AA) 1995-98	1	
86755BJ	Cover, AXODE/AX4S Case (Cast # RFXF2P-7G234-AA) 1999	1	
86755BM	Cover, AXODE/AX4S Case (Cast # RFYF2P-7G234-AA) 2000-Up	1	YF2Z-7G188-AA
86755H	Cover, AX4N Case (Cast # RFF4DP-7G234-BA) 1995-96	1	
86755HA	Cover, AX4N Case (Cast # RFF4DP-7G234-AA) 1995-96	1	
86755HE	Cover, AX4N Case (Cast # RFF6DP-7G234-BA) 1997-99	1	F6DZ-7G188-B
86755HF	Cover, AX4N Case (Cast # RFYF1P-7G234-AA)	1	
86755HG	Cover, AX4N Case (Cast # RFYF1P-7G234-AC) 2000-Up	1	YF1Z-7G188-AC
S86755-2	Sleeve Kit, AXOD/AXODE/AX4S/AX4N Channel Plate Repair (5 Per Kit) 1986-Up (Sonnax)	1	96803
86760A	Case, AXOD 3.0L & 3.8L 1986-91	1	
86760B	Case, AXODE/AX4S 3.0L & 3.8L 1991-95	1	
86760BA	Case, AXODE/AX4S 3.2L 1993-95	1	
86760BB	Case, AXODE/AX4S (Cast # RFF6) 3.0L & 3.8L 1996-Up	1	
86760BC	Case, AX4S 3.0L & 3.8L (With Sensor) (Cast # RFX2) 1999	1	
86760BD	Case, AX4S 3.0L & 3.8L (With Sensor) (Cast # RFYF-2P-AA) 2000-01	1	
86760BG	Case, AX4S (Cast # RF1F1) 4 7/8" Top Bolts 2002-Up	1	
86760H	Case, AX4N 3.0L (SOHC) (Cast # RFF6) 4 7/8" Top Bolts (With Speed-O Hole) 1995-00	1	
86760HA	Case, AX4N 3.0L (DOHC) (Square Starter Hole) 3 1/4" Top Bolts (With Speed-O Hole) 1995-00	1	
86760HB	Case, AX4N (Cast # RF1F1) (Square Starter Hole)3 1/4" Top Bolts (No Speed-O Hole) With Sensor On Top Center Of Case 2001-Up	1	
86760HBA	Case, AX4N (Square Starter Hole 3 1/4" Top Bolts) (No Speed-O Hole) (With Sensor On Top Center Of Case) (Cast # RFYF1P-AB)	1	
86760HBB	Case, AX4N (Square Starter Hole 3 1/4" Top Bolts)(No Speed-O Hole)(With Sensor On Top Center Of Case)(Cast # RFYF1P-BC)	1	
86740HBC	Case, AX4N (Square Starter Hole 3 1/4" Top Bolts)(No Speed-O Hole)(With Sensor On Top Of Case)(Cast # RF4F1P-AG)	1	
86760HC	Case, AX4N 4.6L (Square Starter Hole) 5 1/2" Top Bolts (No Speed-O Hole) 1995-00	1	
86760HCA	Case, AX4N (Square Starter Hole) (5 1/2" Top Bolts)(No Speed-O Hole (Cast # RFYF3P)	1	
86760HE	Case, AX4N (Cast # RF1F1P) 4 7/8" Top Bolts (No Speed-O Hole) With Sensor On Top Center Of Case 2000-Up	1	1F1Z-7005-AA
86760HF	Case, AX4N (Cast # RFYF1P) 4 7/8" Top Bolts (No Speed-O Hole) With Sensor On Top Center Of Case 2001-Up	1	YF1Z-7005-AA
86760HH	Case, AX4N (Cast # RF4F2P-AJ) 4 7/8" Top Bolts (No Speed-O Hole) With Sensor On Top Center Of Case	1	
86760HHA	Case, AX4N (Cast # RF4F2P-AH)(4 7/8" Top Bolts)(No Speed-O Hole)(With Sensor On Top Center Of Case)	1	
86760HHB	Case, AX4N (CAst # RF4F2P-AK)(4 7/8" Top Bolts)(No Speed-O Hole)(With Sensor On Top Center Of Case)	1	
T-SERVO-FIX	Servo Pin Bore Reaming Fixture, AXOD/AXODE/AX4N/AX4S (Sonnax)	1	
86764H	Spacer, AX4N Between Differential Ring Gear & Differential Support 1995-Up	1	

FORD

© Whatever It Takes Transmission Parts. Inc.

86765	Pan, AXOD/AXODE/AX4S Bottom (10MM Pan Bolts) (All Except SHO) 1986-95 (Raised Bolt Holes For Gasket)	1	E6DZ-7A194-A
86765E	Pan, AXODE Bottom (SHO Only) 1991-Up	1	F3TZ-7A194-A
86765G	Pan, AX4S Bottom (8mm Pan Bolts) 1996-Up	1	
86765H	Pan, AX4N Bottom (Flat Surface For Gasket) 1995-Up (AX4N Or AX4N Metric Stamped On Bottom Of Pan)	1	F5DZ-7A194-A
86765HA	Pan, AX4N Bottom (SHO Only) Raised Bolt Holes For Gasket (“AX4N SHO” Stamped On Bottom Of Pan) 1995-Up	1	F7DZ-7A194-BA
86765HB	Pan, AX4N Bottom (Not SHO) Raised Bolt Holes For Gasket (“AX4N Metric” Stamped On Bottom Of Pan) 1995-Up	1	F6DZ-7A194-A
86766	Pan, AXOD/AXODE/AX4S Side (Raised Bolt Holes For Gasket) 1986-Up	1	E6DZ-7G004-A
86766A	Pan, AXOD/AXODE/AX4S Side (Flat Surface For Gasket) 1986-Up	1	
86766H	Pan, AX4N Side (Flat Surface For Gasket) Tin (Stamped AX4N) 1995-Up	1	
86766HA	Pan, AX4N Side (RaisedBolt Holes For Gasket) Tin 1995-Up	1	
86766HB	Pan, AX4N/4F50N Side (Flat Surface For Gasket) Tin (Stamped 4F50N) 2001-Up	1	YF1Z-7G004-BA
86766HC	Pan, 4F50N Side (Aluminum With 4 Mounting Holes) (Cast # 1F2P-7F395-AA) 2001-Up	1	1F2Z-7G004-AB
86774A	Sensor, AX4S/AX4N Vehicle Speed L1999-Up (Use 86436)	1	
86774B	Speed-O Housing, AXOD/AXODE (With 2 Pin Connector)(.871”OD Housing Below O-Ring (Less Speed-O Driven Gear)(Does Not Use A Cable)	1	E9LZ-9E731-A
86774C	Speed-O Housing, AXOD/AXODE (With 2 Pin Connector)(.871”OD Housing Below O-Ring) (Less Speed-O Driven Gear)(Uses A Cable)	1	E9TZ-9E731-A
86774H	Speed-O Housing, AX4N (With 2 Pin Connector) (1.100”OD Housing Below O-Ring) (With 20 Teeth Driven Speed-O Gear)(Does Not Use A Cable) 1995-99	1	F5DZ-9E731-BA
66775A	Nut, AXOD/AXODE/AX4S/AX4N Converter (Metric) 1986-Up	4	
86778K	Bolt Set, AXOD/AXODE/AX4S/AX4N Converter Reactor To Case 1986-Up	1	
S36779A	Pan Bolt, AXOD, AXODE/AX4S/AX4N (Metric) (Sonnax)	1	
86779HK	Bolt Set, AX4N Bottom Pan To Case 1995-Up	1	
86779K	Bolt Set, AXOD/AXODE/AX4S Bottom Pan To Case 1986-Up	1	
86780HK	Bolt Set, AX4N Bottom Case Cover To Case 1995-Up	1	
86780K	Bolt Set, AXOD/AXODE/AX4S Case Cover To Case 1986-Up	1	
86782HK	Bolt Set, AX4N Pump To Case Cover 1995-Up	1	
86782K	Bolt Set, AXOD/AXODE/AX4S Pump To Case Cover 1986-Up	1	
86783	Bolt & Nut Set, AXOD/AXODE/AX4N/AX4S Reverse Anchor Pin 1986-Up	1	
86788HK	Bolt Set, AX4N Side Pan To Case 1995-Up	1	
86788K	Bolt Set, AXOD/AXODE/AX4S Side Pan To Case 1986-Up	1	
86848	Gear, AXOD/AXODE Speed-O Drive (7 Teeth) 1986-Up	1	E6SP-17285
86848A	Gear, AXOD/AXODE Speed-O Drive (8 Teeth) 1986-Up	1	
86848C	Gear, AXOD/AXODE Driven Speed-O (Red, 21 Teeth) (Fits Into # 774)	1	
86852	Cushion, AXOD/AXODE/AX4S Direct Clutch 1986-Up	1	
86852H	Cushion, AX4N Direct Clutch 1995-Up	1	F5DZ-7G448-AA
86854	Cushion, AXOD/AXODE/AX4S Reverse Clutch 1986-Up	1	E6DZ-7E085-A
86857H	Cushion, AX4N Low / Intermediate Clutch 1995-Up	1	F5DZ-7E085-A
86870HA	Snap Ring, AX4N Holds Low / Intermediate Pressure Plate In (.063”) 1995-Up	1	F5DZ-7D483-F
86870HB	Snap Ring, AX4N Holds Low / Intermediate Pressure Plate In (.084”) 1995-Up	1	F5DZ-7D483-G
86870HC	Snap Ring, AX4N Holds Low / Intermediate Pressure Plate In (.105”) 1995-Up	1	F5DZ-7D483-H
86870HD	Snap Ring, AX4N Holds Low / Intermediate Pressure Plate In (.127”) 1995-Up	1	F5DZ-7D483-J
86870HE	Snap Ring, AX4N Holds Low / Intermediate Pressure Plate In (.147”) 1995-Up	1	F5DZ-7D483-K
86871H	Snap Ring, AX4N Holds Coast Clutch Retainer In 1995-Up	1	
86874	Snap Ring, AXOD/AXODE/AX4S/AX4N Holds Intermediate Retainer In 1986-Up	1	E6DZ-7C122-B
86877	Snap Ring, AXOD/AXODE/AX4S/AX4N Retainer To Forward Drum 1986-Up	1	
86878	Snap Ring, AXOD/AXODE/AX4S/AX4N Forward / Direct / Intermediate (.051”) 1986-Up	1	E8DZ-7D483-A
86878A	Snap Ring, AXOD/AXODE/AX4S/AX4N Forward / Direct / Intermediate (.067”) 1986-Up	1	E8DZ-7D483-B
86878AA	Snap Ring, AXOD/AXODE/AX4S/AX4N Forward / Direct / Intermediate (.076”) 1986-Up	1	
86878B	Snap Ring, AXOD/AXODE/AX4S/AX4N Forward / Direct / Intermediate (.086”) 1986-Up	1	E8DZ-7D483-AC
86878C	Snap Ring, AXOD/AXODE/AX4S/AX4N Forward / Direct / Intermediate (.092”) 1986-Up	1	F8DZ-7D483-AD
86878D	Snap Ring, AXOD/AXODE/AX4S/AX4N Forward / Direct / Intermediate (.104”) 1986-Up	1	F8DZ-7D483-AE
86878DA	Snap Ring, AXOD/AXODE/AX4S/AX4N Forward / Direct / Intermediate (.111”) 1986-Up	1	F3DZ-7D483-E
86878E	Snap Ring, AXOD/AXODE/AX4S/AX4N Forward / Direct / Intermediate (.121”) 1986-Up	1	F8DZ-7D483-AF
86879	Snap Ring, AXOD/AXODE/AX4S/AX4N Holds Retainer In Direct Clutch 1986-Up	1	E6DZ-7C122-A
86880	Snap Ring, AXOD/AXODE/AX4S/AX4N Drive Sprocket To Turbine Shaft 1986-Up	1	N803178-S
86882	Retaining Ring, AXOD/AXODE Rear Ring Gear (Prevents Ring Pop Out) 1986-Up	1	96730-RR
86882H	Snap Ring, AX4N Front Planet To Rear Ring Gear 1995-Up	1	
86890	Snap Ring, AXOD/AXODE/AX4S Holds Differential Support (Flat) 1986-Up	1	
86890H	Snap Ring, AX4N Holds Differential Support In Case (Tapered) 1995-Up	1	F6DZ-7D144-AA
86892A	Snap Ring, AXOD/AXODE/AX4S/AX4N Holds Reverse Clutch Pressure Plate In (.061”) 1986-Up	1	
86892B	Snap Ring, AXOD/AXODE/AX4S/AX4N Holds Reverse Clutch Pressure Plate In (.081”) 1986-Up	1	
86892C	Snap Ring, AXOD/AXODE/AX4S/AX4N Holds Reverse Clutch Pressure Plate In (.098”) 1986-Up	1	

© Whatever It Takes Transmission Parts. Inc.

PART #	HARD PARTS (Continued)	QTY.	REFERENCE #
86892D	Snap Ring, AXOD/AXODE/AX4S/AX4N Holds Reverse Clutch Pressure Plate In (.116") 1986-Up	1	
86893	Snap Ring, AXOD/AXODE/AX4S/AX4N Holds Reverse Clutch Retainer 1986-Up	1	N803048-S
86895	Snap Ring, AXOD/AXODE/AX4S Holds Output Shaft To Differential 1986-Up	1	N803200-S
86895H	Snap Ring, AX4N Holds Output Shaft To Differential 1995-Up	1	
86896H	Snap Ring, AX4N Holds Coast Servo Cover In Case 1995-Up	1	F5DZ-7H285-A
86900	Servo Assembly, AXOD/AXODE/AX4S/AX4N Overdrive (No Groove) 1986-97	1	
86900A	Servo Assembly, AXOD/AXODE/AX4S/AX4N Overdrive (1 Groove) 1986-97	1	
86900B	Servo Assembly, AXOD/AXODE/AX4S/AX4N Overdrive (2 Groove) 1986-97	1	
86900G	Servo Assembly, AXODE/AX4S/AX4N Overdrive (No Groove) 1998-Up	1	
86900GA	Servo Assembly, AXODE/AX4S/AX4N Overdrive (1 Groove) 1998-Up	1	
86900GB	Servo Assembly, AXODE/AX4S/AX4N Overdrive (2 Groove) 1998-Up	1	
86901	Spring, AXOD/AXODE/AX4S/AX4N Overdrive Servo (1.700"OD) 1986-Up	1	E6DZ-7F201-A
86902	Piston, AXOD/AXODE/AX4S/AX4N Overdrive Servo (Bonded) 1986-97 (This Is The Clip On Type)	1	F3DZ-7F200-A
86902A	Piston, AXODE/AX4S/AX4N Overdrive Servo (Bonded) 1998-Up (This Is For The Press On Type Pin)(Customer Must Press Off The Old Piston & Press On This Piston)	1	
86903	Pin, AXOD/AXODE/AX4S/AX4N Overdrive Servo (No Groove) 1986-97	1	
86903A	Pin, AXOD/AXODE/AX4S/AX4N Overdrive Servo (1 Groove) 1986-97	1	
86903B	Pin, AXOD/AXODE/AX4S/AX4N Overdrive Servo (2 Groove) 1986-97	1	
86903G	Pin, AXODE/AX4S/AX4N Overdrive Servo (No Groove) W/Bonded Piston 1998-Up	1	F88Z-7H188-AA
86903GA	Pin, AXODE/AX4S/AX4N Overdrive Servo (1 Groove) W/Bonded Piston 1998-Up	1	F88Z-7H188-BA
86903GB	Pin, AXODE/AX4S/AX4N Overdrive Servo (2 Groove) W/Bonded Piston 1998-Up	1	F88Z-7H188-CA
86904	Cover, AXOD/AXODE/AX4S/AX4N Overdrive Servo 1986-Up	1	E6DZ-7D027-B
86905	Servo Assembly, AXOD/AXODE/AX4S Low / Intermediate (No Groove Pin) 1986-Up	1	
86905A	Servo Assembly, AXOD/AXODE/AX4S Low / Intermediate (1 Groove Pin) 1986-Up	1	
86905B	Servo Assembly, AXOD/AXODE/AX4S Low / Intermediate (2 Groove Pin) 1986-Up	1	
86905C	Servo Assembly, AXOD/AXODE/AX4S Low / Intermediate (3 Groove Pin) 1986-Up	1	
86905D	Servo Assembly, AXOD/AXODE/AX4S Low / Intermediate (4 Groove Pin) 1986-Up	1	
S86906	Spring, AXOD/AXODE/AX4S Low / Intermediate Servo 1986-Up (Sonnax)	1	96995A
S86907	Piston, AXOD/AXODE/AX4S Low / Intermediate Servo 1986-Up (Sonnax)	1	96728
86908	Pin, AXOD/AXODE/AX4S Low / Intermediate Servo (No Groove) 1986-Up	1	E6DZ-7D190-A
S86908-5	E-Clip Set, AXOD Low/Intermediate Servo Pin (5 Per Kit) (Sonnax)	1	
86908A	Pin, AXOD/AXODE/AX4S Low / Intermediate Servo (1 Groove) 1986-Up	1	E6DZ-7D190-B
86908B	Pin, AXOD/AXODE/AX4S Low / Intermediate Servo (2 Groove) 1986-Up	1	E6DZ-7D190-C
86908C	Pin, AXOD/AXODE/AX4S Low / Intermediate Servo (3 Groove) 1986-Up	1	E6DZ-7D190-D
86908D	Pin, AXOD/AXODE/AX4S Low / Intermediate Servo (4 Groove) 1986-Up	1	E6DZ-7D190-E
86909	Cover, AXOD/AXODE/AX4S Low / Intermediate Servo 1986-Up	1	
86910H	Servo Assembly, AX4N Coast 1995-Up	1	
86911H	Spring, AX4N Coast Servo 1995-Up	1	F5DZ-7H291-A
86912H	Piston, AX4N Coast Servo (Bonded) 1995-Up	1	XF32-7H281-AA
86914H	Cover, AX4N Coast Servo (Bonded) 1995-Up	1	F5DZ-7H284-A
86915	Band Guide, AXOD/AXODE/AX4S Overdrive Band (Plastic)(.815" Long)	1	
86915H	Band Guide, AXODE/AX4S/AX4N Overdrive Band (Plastic)(.660" Long)	1	
S86925K	Piston & Sleeve Kit, AXOD/AXODE/AX4S (Contains: Pistons, Sleeves & O-Rings For N-D, 1-2, 3-4 Accumulator) (Sonnax) 1986-Up	1	965123K
86926	Spring, AXOD/AXODE/AX4S 1-2 Accumulator (3.0L) Yellow (Outer) 1986-Up	1	E6DZ-7G267-A
S86926-3K	Spring KIt, AXOD/AXODE/AX4S 1-2 Shift Tuning (Sonnax) (Contains: 1 Large, 1 Medium & 1 Small 1-2 Accumulator)	1	
86926A	Spring, AXOD/AXODE/AX4S 1-2 Accumulator (3.8L) Tan (Outer) 1986-Up	1	E8DZ-7G267-A
86926AA	Spring, AXOD/AXODE/AX4S 1-2 Accumulator (Purple) (Outer) 1986-94	1	F58Z-7G267-A
86926H	Spring, AX4N 1-2 Accumulator (1.440" Long) (1.308"OD) (.110"OD Wire) 1995-Up	1	F5DZ-7G267-A
86927	Piston, AXOD/AXODE/AX4S 1-2 Accumulator (2.116"OD) 1986-Up	1	
86927H	Piston, AX4N 1-2 & 2-3 Accumulator 1994-Up (Use 86952)	1	
S86927K	Piston & Sleeve Kit, AXOD/AXODE/AX4S (Contains: Pistons, Sleeves & O-Rings For 1-2 Accumulator) 1986-Up (Sonnax)	1	96513-K
86928	Pin, AXOD/AXODE/AX4S 1-2, 3-4 & N-D Accumulator (AX4N 1-2, 2-3, 3-4 & Reverse) 1986-Up	3-4	E6DZ-7G094-A
86929	Spring, AXOD/AXODE/Ax4S 1-2 Accumulator (Inner Spring Of 2 Spring Set Up) Yellow 1989-90	1	E6DZ-7G326-A
86929A	Spring, AXOD/AXODE/AX4S 1-2 Accumulator (Inner) Brown 1986-Up	1	E8DZ-7G326-A
86929B	Spring, AXOD/AXODE/AX4S 1-2 Accumulator (Inner) Purple 1986-Up	1	E8DZ-7G326-A
86929C	Spring, AXOD/AXODE/AX4S 1-2 Accumulator (Inner) Pink 1986-Up	1	E8DZ-7G358-A
86931H	Spring, AX4N 2-3 Accumulator (1.500" Long) (1.324"OD) (.110"OD Wire) 1995-Up	1	F5DZ-7F285-A
86932H	Piston, AX4N 2-3 Accumulator (With Small Spring Pressed Onto The Piston)(.641" Thick) (1.925"OD) 1995-Up	1	
86936	Spring, AXOD/AXODE/AX4S 3-4 Accumulator (Outer) Green 1986-Up	1	E6DZ-7G266-A
86936A	Spring, AXOD/AXODE/AX4S 3-4 Accumulator (Outer) White 1986-Up	1	F8DZ-7G266-AA

© Whatever It Takes Transmission Parts. Inc.

86936B	Spring, AXOD/AXODE/AX4S 3-4 Accumulator (Outer) Natural (1.445" Long)(1.207"OD) (.105"OD Wire) 1986-Up	1	E8DZ-7G260-A
86936H	Spring, AX4N 3-4 Accumulator (1.500" Long) (1.305"OD) (.108"OD Wire) 1995-Up	1	F5DZ-7G266-A
86937	Piston, AXOD/AXODE/AX4S/AX4N 3-4 Accumulator (1.670"OD) 1986-Up	1	E6DZ-7F287-A
S86937K	Piston & Sleeve Kit, AXOD/AXODE/AX4S (Contains: Pistons, Sleeves & O-Rings For 3-4 Accumulator) 1986-Up (Sonnax)	1	96512-K
86939	Spring, AXOD/AXODE/AX4S 3-4 Accumulator (Inner) Green (1.440" Long) (.880"OD) (.075"OD Wire) 1986-Up	1	E6DZ-7F288-A
86939A	Spring, AXOD/AXODE/AX4S 3-4 Accumulator (Inner) No Color (1.810" Long) (.885"OD) (.071"OD Wire) 1986-Up	1	
86946H	Spring, AX4N Reverse Accumulator (1.380" Long) (.964"OD) (.089"OD Wire) 1995-Up	1	F8OZ-7E485-BA
86947H	Piston, AX4N Reverse Accumulator (1.360"OD) 1995-Up	1	
86950H	Accumulator Assembly, AX4N Neutral-Drive (1 Spring Type) 1995-Up	1	
86950HA	Accumulator Assembly, AX4N Neutral-Drive (2 Spring Type) 1995-Up	1	
86951	Spring, AXOD/AXODE/AX4S Neutral-Drive Accumulator (Outer) 1986-Up	1	E6DZ-7G300-A
86951B	Spring, AXOD/AXODE/AX4S Neutral-Drive Accumulator (Inner) 1986-Up	1	E6DZ-7G301-A
86951H	Spring, AX4N Neutral-Drive (1 Spring Type) (1.190" Long) (1.295"OD) (.105"OD Wire) 1995-Up	1	
86951HD	Spring, AX4N Neutral-Drive (2 Spring Type) Outer (1.225" Long) (1.472"OD) (.098"OD Wire) 1995-Up	1	
86951HH	Spring, AX4N Nuetral-Drive (2 Spring Type) Inner (1.200" Long) (1.157"OD) (.080"OD Wire) 1995-Up	1	
86952	Piston, AXOD/AXODE/AX4S Neutral-Drive Accumulator (1.932"OD)(.435"OD Pin) 1986-Up	1	F5DZ-7F251-A
86952H	Piston, AX4N Neutral Drive Accumulator (1.932"OD Piston)(.475"OD Pin) 1995-Up	1	
S86952K	Piston & Sleeve Kit, AXOD/AXODE/AX4S (Contains: Pistons, Sleeves & O-Rings For Neutral-Drive Accumulator) 1986-Up (Sonnax)	1	96511-K
86954	Spring, AXOD/AXODE/AX4S Neutral Drive Accumulator (Inner) 1986-Up	1	E6DZ-7G301-A
86954H	Cover, AX4N Neutral Drive Accumulator 1995-Up	1	F5DZ-7H275-A
86962	Piston, AXOD/AXODE/AX4S Intermediate Clutch (Aluminum) 1986-Up	1	E6DZ-7E005-A
86962GK	Piston Kit, AX4S (Bonded) 1995-Up (Contains: 86962H, 86963H, 86964H, 86964HA, 86965H)	1	
86962H	Piston, AX4S/AX4N Intermediate Clutch (Bonded) 1995-Up	1	4F1Z-7E005-AA
86962HK	Piston Kit, AX4N Bonded 1995-Up (Contains: # 86962H, 86963H, 86964H, 86964HA, 86965H & 86967H)	1	
86963H	Piston Housing, AX4N Intermediate Clutch Return 1995-Up (AX4S 1996-Up 3.8L Windstar)	1	F3DZ-7H185-A
86964	Piston, AXOD/AXODE/AX4S Forward Clutch (Aluminum) 1986-Up	1	F1DZ-7A262-A
86964A	Piston, AXOD/AXODE/AX4S Forward Clutch (Steel) 1986-Up	1	F4DZ-7A262-A
86964AA	Piston, AXOD/AXODE/AX4S Forward Clutch (Aluminum) (Taurus SHO) 1986-Up (Can Use 86964H)	1	F4DZ-7A262-B
86964H	Piston, AX4S/AX4N Forward Clutch (Bonded) 1994-Up (.476" Thick Shoulder) For A 4 Clutch Drum)	1	F8DZ-7A262-AB
86964HA	Piston, AX4S/AX4N Forward Clutch (Bonded) 1994-Up (.644" Thick Shoulder) For A 3 Clutch Drum)	1	F8AZ-7A262-A
86965	Piston, AXOD/AXODE/AX4S Direct Clutch 1986-Up	1	E6DZ-7A262-A
86965H	Piston, AX4S/AX4N Direct Clutch (Bonded) With Check Valve 1995-Up	1	
86966	Piston, AXOD/AXODE/AX4S/AX4N Reverse Clutch 1986-Up	1	E6DZ-7D402-A
86967H	Piston, AX4N Low / Intermediate Clutch (Bonded) 1995-07	1	F5DZ-7H298-A
86972	Retainer W/Springs, AXOD/AXODE/AX4S/AX4N Intermediate Clutch 1986-Up	1	E6DZ-7F222-A
86974	Retainer W/Springs, AXOD/AXODE/AX4S Forward Clutch 1986-Up	1	
86974H	Retainer W/Springs, AX4N Forward Clutch 1995-Up	1	F8DZ-7F194-AA
86975	Retainer W/Springs, AXOD/AXODE/AX4S/AX4N Direct Clutch 1986-Up	1	F1DZ-7F235-A
86976	Retainer W/Springs, AXOD/AXODE/AX4S/AX4N Reverse Clutch 1986-Up	1	E6DZ-7G335-A
86977H	Retainer W/Springs, AX4N Low / Intermediate Clutch 1995-Up (Also Has A Washer # 86258H With This)	1	F5DZ-7H266-A
86991	Linkage Assembly, AXOD/AXODE/AX4S (Internal) 1986-99	1	
86991G	Linkage Assembly, AX4S (Internal) 2000-Up	1	
86991H	Linkage Assembly, AX4N (Internal) 1995-99	1	
86991HA	Linkage Assembly, AX4N (Internal) 2000-Up	1	
86994	Park Rod Actuator, AXOD/AXODE/AX4S (14 3/4") 1986-99	1	
86994H	Park Rod Actuator, AX4N (16 1/8") 1995-Up	1	F5DZ-7A232-A
86995	Park Pawl Assembly, AXOD/AXODE/AX4S/AX4N 1986-99	1	
86995H	Park Pawl Assembly, AX4S/AX4N 2000-Up	1	
86996	Cooler Line Fitting, AXOD/AXODE/AX4S/AX4N (18mm) 1986-Up	2	
86996B	Cooler Line Fittting, AXODE/AX4S/AX4N (20mm) 1992-Up	2	F7DZ-7D273-AA
86996BR	Fitting, AXODE/AX4S/AX4N/4F50N Cooler Line (Push-In)(1/4" Pipe Thread)(3/8" Line) 1992-Up (For Use When Case Threads Are Worn)(Teckpak)	1	
86996C	Clip, AXOD/AXODE/AX4S/AX4N Cooler Line Retainer For 18mm Fittings 1986-Up	2	
86996CA	Clip, AXODE/AX4S/AX4N Cooler Line Retainer For 20mm Fittings 1992-Up	2	
86997	Wire Link, AXOD T.V. Cable 1986-90	1	
86999	Tube Set, AXOD Early Non-Electric 1986-90	1	
86999-1A	Lube Tube, AXOD/AXODE Speed-O (Update) 1991-Up	1	F2DZ-7G086-A

© Whatever It Takes Transmission Parts. Inc.

PART #	HARD PARTS (Continued)	QTY.	REFERENCE #
86999-2	Lube Tube, AXOD Rear Planet Lube (Early) 1991-92	1	F2DZ-7G084-A
86999-2A	Lube Tube, AXOD/AXODE Rear Planet Lube (Update) 1993-Up	1	F3DZ-7G084-A
86999-4	Bracket, AXOD/AXODE Holds Lube Tubes In 1986-Up	1	96806
86999-4K	Bracket Set, AXOD/AXODE/AX4N Holds Lube Tubes In (3 Per Set) 1986-Up	1	
86999E	Tube Set, AXODE 1991-Up	1	
86999G	Tube Set, AX4S 1995-98	1	
86999G-1A	Lube Tube, AX4S Speed-O Differential 1999-Up	1	1F1Z-7G084-AA
86999G-4K	Bracket Set, AX4S Holds Lube Tubes In (2 Brackets) 1994-Up	1	
86999GA	Tube Set, AX4S 1999-Up	1	
86999H	Tube Set, AX4N 1995-Up	1	

© Whatever It Takes Transmission Parts. Inc.

© Whatever It Takes Transmission Parts. Inc.

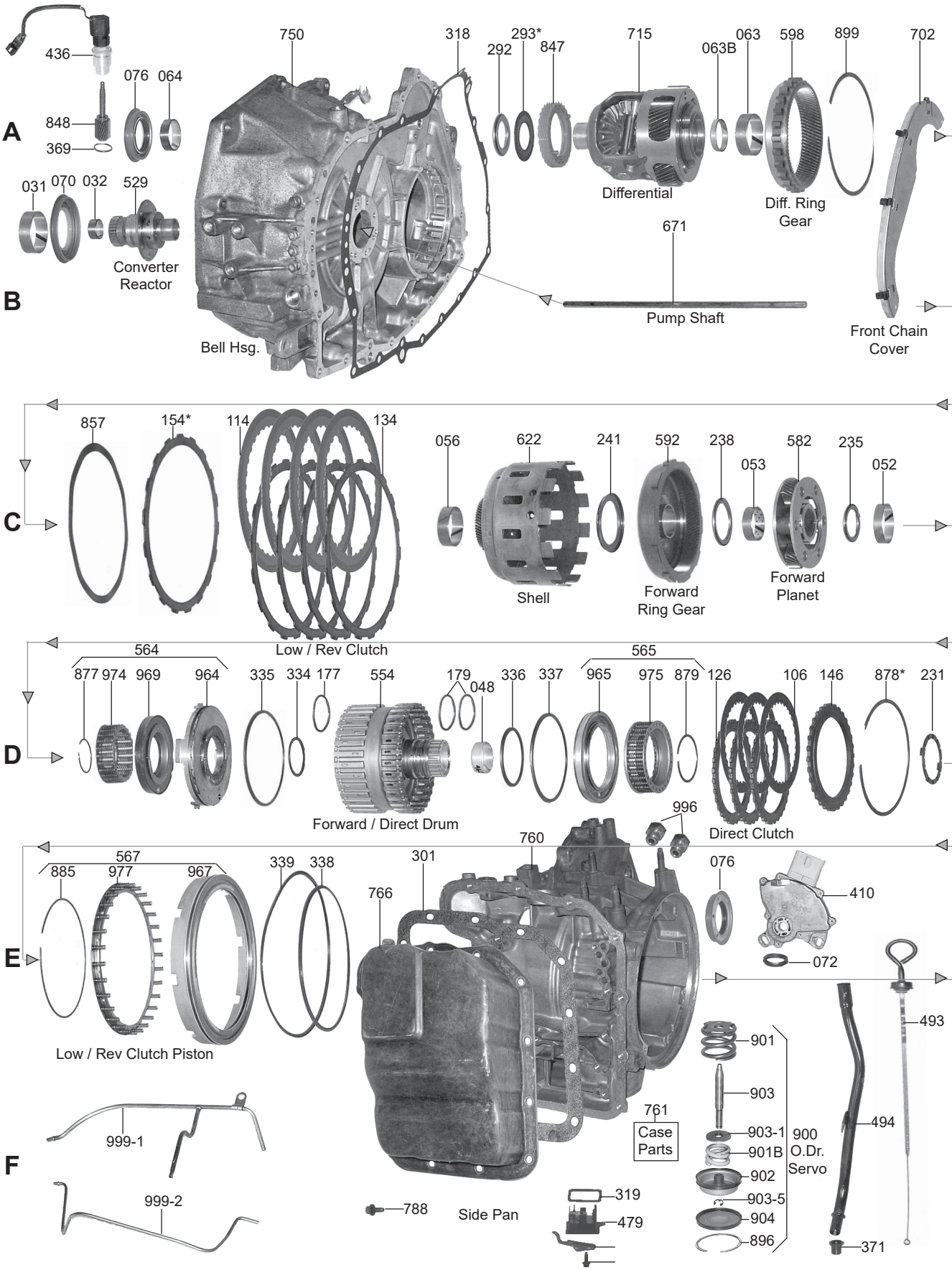

A

B

C

D

E

F

FORD

000 P&R Kit

002 OHK Kit

004 Master L/Steels Kit

006 Master W/Steels Kit

011 Filter Kit

030 Bushing Kit

119 Friction Module

167 V.B. Kit

175 Ring Kit

201 Bearing Kit

400 Tech Manual

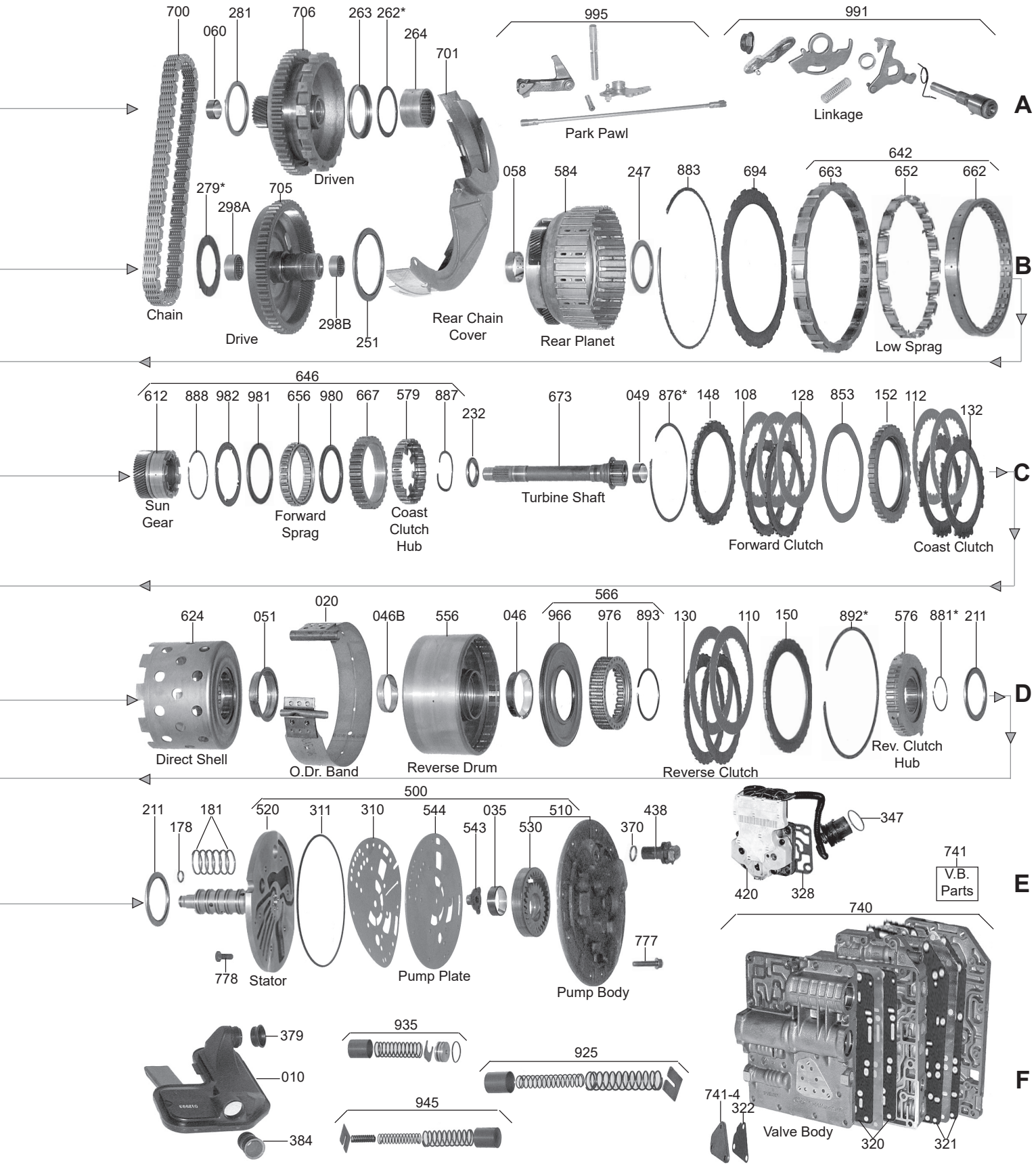

1-800-940-0197

© Whatever It Takes Transmission Parts. Inc.

PART #	PAPER & RUBBER KIT	QTY.	REFERENCE #
96000	Paper & Rubber Kit, CD4E 1994-Up	1	

PART #	OVERHAUL KITS	QTY.	REFERENCE #
96002	Overhaul Kit, CD4E 1994-04 (For Bonded Pistons Sell 96960AK Or 96960BK)	1	
96002CW	Overhaul Kit, CD4E (With Molded Pan Gasket) 2003-Up (For Bonded Pistons Sell 96960BK)	1	

PART #	MASTER L/STEEL KIT	QTY.	REFERENCE #
96004	Master L/Steels Kit, CD4E 1994-95 (For Bonded Pistons Sell 96960AK)	1	
96004B	Master L/Steels Kit, CD4E (Hi Energy Direct/Coast Frictions) 1996-02 (For Bonded Pistons Sell 96960AK Or 96960BK)	1	
96004CW	Master L/Steels Kit, CD4E (With Molded Pan Gasket)(With Hi Energy Direct/Coast Frictions) 2003-Up (For Bonded Pistons Sell 96960BK)	1	

PART #	MASTER W/STEEL KIT	QTY.	REFERENCE #
96006	Master W/Steels Kit, CD4E 1994-95 (For Bonded Pistons Sell 96960AK)	1	
96006B	Master W/Steels Kit, CD4E (Hi Energy Direct/Coast Frictions) 1996-02 (For Bonded Pistons Sell 96960AK Or 96960BK)	1	
96006CW	Master W/Steels Kit, CD4E (W/Molded Pan Gasket)(With Hi Energy Direct/Coast Frictions) 2003-Up (For Bonded Pistons Sell 96960BK)	1	

PART #	FILTER	QTY.	REFERENCE #
96010	Filter, CD4E 1994-Up	1	F3RZ-7A098-A

PART #	BANDS	QTY.	REFERENCE #
96020	Band, CD4E Overdrive (1.658” Wide) 1994-95	1	F3RZ-7D034-A
96020A	Band, CD4E Overdrive (2.047” Wide) (4 Cylinder & V6) (High Energy) 1994-Up	1	F4RZ-7D034-A
96020AA	Band, CD4E Overdrive (2.047” Wide) (V8 Engine) (Higher Energy) 2001-Up	1	

PART #	BUSHINGS	QTY.	REFERENCE #
96030	Bushing Kit, CD4E 1994-Up	1	
96030A	Bushing Kit, CD4E (LA4A-EL) 1994-Up (Contains: 15 Bushings)	1	
96031	Bushing, CD4E Converter Hub (1.772”ID)	1	F3RP-7N805-AA
96031A	Bushing, CD4E Converter Hub (Plain) 1994-Up	1	
96032	Bushing, CD4E Converter Reactor (.935”ID)	1	F3RP-7N817-AA
96035	Bushing, CD4E Inner Pump Gear (1.358”ID)	1	F3RP-7B259-BA
96046	Bushing, CD4E Reverse Clutch Drum (W/Shoulder) (Rear)	1	F3RP-7F217-AA
96046B	Bushing, CD4E Reverse Clutch Drum (Front)	1	F3RP-7F218-AA
96048	Bushing, CD4E Direct & Forward Clutch Drum	1	F3RP-7H209-AB
96049	Bushing, CD4E Turbine Shaft	1	F3RP-7H025-AA
96051	Bushing, CD4E Direct Hub & Shell	1	F3RP-7H240-AA
96052	Bushing, CD4E Forward Sun Gear	1	F3RP-7F366-AA
96053	Bushing, CD4E Forward Planet	1	F3RP-7H034-AA
96056	Bushing, CD4E Reverse Sun Gear Shell	1	F3RP-7H033-AB
96058	Bushing, CD4E Reverse Planet	1	F3RP-7H043-AA
96060	Bushing, CD4E Driven Sprocket To Axle (1.160”ID)	1	F3RP-7G344-AA
96063	Bushing, CD4E Differential Housing To Driven Sprocket (2.061”ID)	1	F3RP-7H040-AA
96063B	Bushing, CD4E Differential Housing To Axle Spider Gear (1.620”ID)	1	
96063BA	Bushing, CD4E (AWD) Differential Housing To Axle Spider Gear (1.160”ID) (Use 96060)	1	
86064	Bushing, CD4E 2WD Bell Housing To Differential (Behind Axle Seal) (1.410”ID)	1	
96064A	Bushing, CD4E AWD Differential To Bell Housing (3.750”ID)	1	

PART #	METAL CLAD SEALS	QTY.	REFERENCE #
96070	Seal, CD4E Converter Hub	1	F3RZ-7F401-A
86072	Seal, CD4E Manual Control Lever 1994-Up	1	E1FZ-7B498-A
86076	Seal, CD4E Axle (2WD Both Axles)(AWD Case Side Only)	1-2	E6DZ-1177-A
96076A	Seal, CD4E Axle (AWD Adapter, Bell Housing Side)	1	YL8Z-1S177-AA

PART #	FRICTION CLUTCH	QTY.	REFERENCE #
96106	Friction, CD4E Direct Clutch (.065”) (24 Teeth) (5.268”OD) 1994-95	3-4	F4RZ-7B164-D
96106A	Friction, CD4E Direct Clutch (.065”) (24 Teeth) (5.268”OD) High Energy 1996-Up	3-4	F6RZ-7B164-A

© Whatever It Takes Transmission Parts. Inc.

96108	Friction, CD4E Forward Clutch (.065") (32 Teeth) (5.272"OD)	3	F3RZ-7B164-B
96108A	Friction, CD4E Forward Clutch (.065") (32 Teeth) (5.272"OD) High Energy 2001-Up	3	
96110	Friction, CD4E Reverse Clutch (.065") (6.065"OD)	2	F3RZ-7B164-A
96112	Friction, CD4E Coast Clutch (.065") (24 Teeth) (4.830"OD) 1994-96	2	F3RZ-7B164-E
96112A	Friction, CD4E Coast Clutch (.065") (24 Teeth) (4.830"OD) Hi Energy 1997-Up	2	F7RZ-7B164-AA
96114	Friction, CD4E Low/Reverse Clutch (.065") (32 Teeth) (8 5/8"OD)	3-4	F3RZ-7B164-C
96114A	Friction, CD4E Low/Reverse Clutch (.065") (32 Teeth) (8 5/8"OD) (Hi Energy) 2001-Up	3-4	
96119	Friction Module, CD4E 1994-Up	1	
96119A	Friction Module, CD4E (With Hi Energy Coast & Direct Clutch Frictions)	1	

PART #	STEEL CLUTCH	QTY.	REFERENCE #
96126	Steel, CD4E Direct Clutch (.079") (32 Teeth) (4.114"ID) 1994-Up	3-4	F3RZ-7B442-E
96126B	Steel, CD4E Direct Clutch (.118") (32 Teeth) (4.114"ID) 1994-Up	3-4	F5RZ-7B442-A
96128	Steel, CD4E Forward Clutch (.069") (32 Teeth) (4.260"ID)	2-3	F3RZ-7B442-C
96130	Steel, CD4E Reverse Clutch (.069") (32 Teeth) (4.750"ID)	2	F3RZ-7B442-A
96132	Steel, CD4E Coast Clutch (.069") (20 Teeth) (3.776"ID)	2	F3RZ-7B442-D
96134	Steel, CD4E Low/Reverse Clutch (.069") (18 Teeth) (7.800"ID)	3-4	F3RZ-7B442-B

PART #	CLUTCH PRESSURE PLATES	QTY.	REFERENCE #
96146	Pressure Plate, CD4E Direct Clutch W/Hump (.155" Thick Less Hump)	1	F3RZ-7B477-A
96148	Pressure Plate, CD4E Forward Clutch (.158") Flat (4.265"ID) Can Use 96148A	1	F3RZ-7B066-BA
96148A	Pressure Plate, CD4E Forward Clutch (.158") W/Hump (4.265"ID) Can Use 96148	1	
96150	Pressure Plate, CD4E Reverse Clutch (.156")	1	F3RZ-7D408-A
96152	Pressure Plate, CD4E Coast Clutch (.358") 1994-97	1	F3RZ-7B066-C
96152B	Pressure Plate, CD4E Coast Clutch (.188") 1998-Up	1	F8RZ-7B066-AA
96154A	Pressure Plate, CD4E Low/Reverse Clutch (.083")	1	F3RZ-7B066-D
96154B	Pressure Plate, CD4E Low/Reverse Clutch (.090")	1	F3RZ-7B066-E
96154C	Pressure Plate, CD4E Low/Reverse Clutch (.099")	1	F3RZ-7B066-F
96154D	Pressure Plate, CD4E Low/Reverse Clutch (.106")	1	

PART #	VALVE BODY KITS	QTY.	REFERENCE #
T96167	Shift Kit, CD4E Junior 1994-99	1	SK® CD4-JR

PART #	OIL SEALING RINGS	QTY.	REFERENCE #
96175	Ring Kit, CD4E	1	
96177T	Ring, CD4E Forward/Direct Clutch Hub (Solid) (Teflon)	1	F3RZ-7C099-A
96178T	Ring, CD4E Pump Stator To Turbine Shaft (Teflon)	1	F3RP-7H115-BA
96179T	Ring, CD4E Reverse Clutch Cylinder (Scarf Cut) (Teflon)	2	F3RZ-7D020-A
96181T	Ring, CD4E Pump Stator To Forward/Direct & Reverse Drum (Teflon)	6	F3RZ-7H114-FA

PART #	WASHERS & BEARINGS	QTY.	REFERENCE #
96201A	Bearing Kit, CD4E	1	
96211	Bearing, CD4E Stator To Reverse Hub	1	F3RZ-7H241-A
96231	Washer, CD4E Forward & Direct Drum To Reverse Drum (Plastic)(4 Tab)	1	F3RZ-7G116-A
96231HD	Washer, CD4E Forward & Direct Drum To Reverse Drum (Plastic)(4 Tab)(Heavy Duty)(A Direct Replacement For The 96231, That Breaks)	1	
96232	Bearing, CD4E Forward Sun Gear To Forward/Direct Drum	1	F3RZ-7H026A
96235	Bearing W/Races, CD4E Forward Planet To Sun Gear (.141" Thick)(1.960"OD)	1	F3RZ-7H027A
96238	Bearing, CD4E Forward Ring Gear To Forward Planet	1	F3RZ-7H028A
96241	Bearing, CD4E Reverse/Overdrive Shell To Forward Ring Gear	1	F3RZ-7G178A
96251	Bearing, CD4E Drive Sprocket To Reverse Planet	1	F3RZ-7F240A
S96251-1K	Shim Kit, CD4E (Under # 251 & # 281 Bearing) Sonnaz (Contains: 1-.008" & 1-.015" For #251 / 1-.005" & 1-.010" For #281 Bearing For Settin End Play)	1	
96262A	Shim, CD4E Driven Sprocket To Case (.048")	1	F3RZ-7H086F
96262B	Shim, CD4E Driven Sprocket To Case (.055")	1	F3RZ-7H086E
96262C	Shim, CD4E Driven Sprocket To Case (.062")	1	F3RZ-7H086D
96262D	Shim, CD4E Driven Sprocket To Case (.069")	1	F3RZ-7H086C
96262E	Shim, CD4E Driven Sprocket To Case (.076")	1	F3RZ-7H086B
96262G	Shim, CD4E Driven Sprocket To Case (.083")	1	F3RZ-7H086A
96263	Bearing, CD4E Driven Sprocket To Case	1	F3RZ-7G247-A
96264	Caged Roller Bearing, CD4E Case To Driven Sprocket Support (Presses Into Case)	1	F3RZ-7G355-A
96279A	Washer, CD4E Drive Sprocket To Bell Housing (.056")	1	F3RZ-7G099A
96279B	Washer, CD4E Drive Sprocket To Bell Housing (.066")	1	F3RZ-7G099B
96279C	Washer, CD4E Drive Sprocket To Bell Housing (.076")	1	F3RZ-7G099C
96279D	Washer, CD4E Drive Sprocket To Bell Housing (.086")	1	F3RZ-7G099D

© Whatever It Takes Transmission Parts. Inc.

PART #	WASHERS & BEARINGS (Continued)	QTY.	REFERENCE #
96281	Bearing, CD4E Differential To Driven Sprocket	1	F3RZ-7G233A
96292	Bearing, CD4E Differential To Bell Housing (2.295"OD)(1.425"ID)	1	F3RZ-4221A
96292C	Bearing, CD4E (AWD Only) Differential To Bell Housing (2.605"OD)(1.980"ID)	1	
96293A	Race, CD4E Differential To Bearing (.039") (2.815"OD)(1.435"ID)	1	F3RZ-4067-A
96293B	Race, CD4E Differential To Bearing (.050") (2.815"OD)(1.435"ID)	1	F3RZ-4067-B
96293C	Race, CD4E Differential To Bearing (.062") (2.815"OD)(1.435"ID)	1	F3RZ-4067-C
96293D	Race, CD4E Differential To Bearing (.074") (2.815"OD)(1.435"ID)	1	F3RZ-4067-D
96293E	Race, CD4E Differential To Bearing (.085") (2.815"OD)(1.435"ID)	1	F3RZ-4067-E
96293F	Race, CD4E (AWD Only) Differential To Bearing (.075") (2.625"OD)(1.985"ID)	1	
96298A	Bearing, CD4E Drive Sprocket (Front, Inner)	1	F3RZ-7H032A
96298B	Bearing, CD4E Drive Sprocket (Rear, Inner)	1	F3RZ-7H029A

PART #	GASKETS & RUBBER COMPONENTS	QTY.	REFERENCE #
96301	Gasket, CD4E Side Cover (Valve Body Cover) Cork	1	F3RZ-7F396A
96301BW	Gasket, CD4E Side Cover (Valve Body Cover) (Molded Rubber) 2003-Up	1	
96301F	Gasket, CD4E Side Cover (Valve Body Cover) Farpak	1	F3RZ-7F396A
96308	Gasket, CD4E Accumulator Body Cover	2	F3RZ-7F202A
96310	Gasket, CD4E Pump Seperator Plate 1994-96	1	F3RZ-7G331-A
96310A	Gasket, CD4E Pump Seperator Plate 1997-Up	1	F7RZ-7G331-AA
96311	Lathe Cut Seal, CD4E Pump Body	1	F3RZ-7A248-A
96318	Gasket, CD4E Case To Bell Housing	1	F3RZ-7B353-A
96320	Gasket, CD4E Valve Body Upper Seperator Plate (Takes 2)	2	F3RZ-7D100-A
96321	Gasket, CD4E Valve Body Lower Seperator Plate (Takes 2)	2	
96322	Gasket, CD4E Pressure Tap Plate	1	F3RZ-7H251-A
96328	Gasket, CD4E Electronic Control Body	1	F3RZ-7H200-A
96334	Lip Seal, CD4E Forward Clutch Piston (Inner)	1	F3RZ-7A548-C
96335	Lip Seal, CD4E Forward Clutch Piston (Outer)	1	F3RZ-7A548-A
96336	Lip Seal, CD4E Direct Clutch Piston (Inner)	1	F3RZ-7F225-A
96337	Lip Seal, CD4E Direct Clutch Piston (Outer)	1	F3RZ-7A548-B
96338	Seal, CD4E Low/Reverse Clutch (Inner)	1	F3RZ-7D404-A
96339	Seal, CD4E Low/Reverse Clutch (Outer)	1	F3RZ-7D403-A
96347	O-Ring, CD4E Case Connector	1	F3RZ-7B329-A
96354A	O-Ring, CD4E 2-4 Accumulator Cover	1	
S96354AK	O-Ring Kit, CD4E Accumulator Piston (25 Pieces)(Sonnax)(Fits S96935, S96945, S96950)	1	
96368	O-Ring, CD4E Speed-O Sleeve(Inner)	1	
96369	O-Ring, CD4E Vehicle Speed Sensor	1	N806913-S
96370	O-Ring, CD4E Turbine Speed Sensor	1	F1DZ-7Z101-A
96371	Seal, CD4E Filler Tube	1	E2FZ-7N243-A
96379	Seal, CD4E Filter	1	F3RP-7Z302-A
96383	Seal, CD4E Final Drive Lube Tube	1	F3RZ-7H205-A
96384	Seal, CD4E Filter To Valve Body (Exhaust Regulator)	1	F3RZ-7H249-A

PART #	TECHNICAL MANUALS	QTY.	REFERENCE #
96400	Technical Manual, CD4E (ATSG)	1	TMCD4E
A96400	Rebuild Manual, CD4E Rebuild Procedures (ATRA)	1	
A96400D	Diagnostic Manual, CD4E ("Are They Really That Tough") (ATRA)	1	

PART #	ELECTRICAL COMPONENTS	QTY.	REFERENCE #
96410	Switch, CD4E Manual Lever Position (7 Prong Connector) 1994-Up	1	F3RZ-7F293-A
96410A	Switch, CD4E Manual Lever Position (9 Prong Connector) 1994-Up	1	F8RZ-7F293-AA
96420	Solenoid Assembly, CD4E W/Black Connector 1994-95	1	F3RZ-7G391-A
96420A	Solenoid Assembly, CD4E 1994-Up	1	F6RZ-7G391-AA
96436	Sensor, CD4E Vehicle Speed Sensor (3 Prong, W/Wire Harness & Screws Onto The Speed-O Housing) 1994-Up (6-95-Up Contour 2.5L Only)	1	F5RZ-9E731-BB
96436A	Sensor, CD4E Vehicle Speed Sensor (2 Prong Connector Is Made Onto The Plastic Speed-O Housing, With 23 Teeth Driven Speed-O Gear) 1994-Up	1	F42Z-9E731-AA
96436AA	Sensor, CD4E Vehicle Speed Sensor (2 Prong Connector Is Made Onto The Aluminum Speed-O Housing, With 20 Teeth Driven Speed-O Gear) 1994-Up	1	
96436AB	Sensor, CD4E Vehicle Speed Sensor (3 Prong, With Wire Harness & Screws Onto The Speed-O Housing) (2.0L, 4 Cylinder)	1	F5RZ-9E731-CB
96436AC	Sensor, CD4E Vehicle Speed Sensor (3 Prong With Wire Harness & Screws Into The Speed-O Housing) 1994-Up	1	
96436B	Sensor, CD4E Vehicle Speed Sensor (2 Prong, No Wire Harness)(Fits In The Case By The Axle Seal) 1998-Up	1	F8RZ-7H103-AA

© Whatever It Takes Transmission Parts. Inc.

96438	Sensor, CD4E Turbine Speed Sensor (W/Green Connector) (Probe 1994-97) W/Enclosed Pick-Up	1	E7RZ-7M101-KA
96438A	Sensor, CD4E Turbine Speed Sensor (W/Black Connector) W/Enclosed Pick-Up	1	F7RZ-7M101-AA
96438B	Sensor, CD4E Turbine Speed Sensor (W/Black Connector) (1st Design) W/Exposed Pick-Up (Use D96438)	1	
96446A	Wire Harness, CD4E Internal (10 Prong Case Connector) With Plastic Solenoid Cover	1	
S96446A-4	Bracket, CD4E Wiring Harness Connector (Metal)(Sonnax)	1	

PART #	MISC. COMPONENTS	QTY.	REFERENCE #
96487	Grommet, CD4E Breather (On Oil Pan)	1	
T74498-1	Grommet, CD4E Shift Cable End To Manual Lever (Teckpak)	1	

PART #	HARD PARTS	QTY.	REFERENCE #
96500	Pump , CD4E 1994-96	1	
96500A	Pump, CD4E 1997-Up	1	F7RZ-7A103-AA
96510A	Pump Body W/Gears, CD4E (With Drive Gear Insert)	1	
96520	Stator, CD4E Pump Cover 1994-96	1	F3RZ-7A108-A
96520A	Stator, CD4E Pump Cover 1997-Up	1	
96529	Converter Reactor, CD4E (32 Spline)	1	
96543	Insert, CD4E Oil Pump Drive Gear	1	E1FZ-7F402-A
96544	Plate, CD4E Pump 1994-96	1	
96544A	Plate, CD4E Pump 1997-Up	1	F7RZ-7A142-AA
96554	Drum, CD4E Forward/Direct (Uses 3 Direct Steels .118” Thick) 1994-E98 (Forward Clutch Return Spring Has Multiple Springs)	1	F5RZ-7G120-A
96554A	Drum, CD4E Forward/Direct (Uses 4 Direct Steels .079” Thick) 1994-E98 (Forward Clutch Return Spring Has Multiple Springs)	1	F5RZ-7G120-BB
96554AK	Drum Kit, CD4E Forward/Direct (Uses 4 Direct Steels .079” Thick) 1994-E98 (Contains: From # 148 To # 554) (With Kit)(Will Retro Fit The 96554CA Drum L1998-Up)	1	
96554B	Drum, CD4E Forward/Direct (Uses 3 Direct Steels .079” Thick) 1994-E98 (Forward Clutch Return Spring Has Multiple Springs)	1	F7RZ-7G120-AC
96554C	Drum, CD4E Forward/Direct (Uses 3 Direct Steels .118” Thick) L1998-Up (Forward Clutch Return Spring Has 1 Large Coil Spring)	1	F8RZ-7G120-AA
96554CA	Drum, CD4E Forward/Direct (Uses 4 Direct Steels .079” Thick) L1998-Up (Forward Clutch Return Spring Has 1 Large Coil Spring)	1	F8RZ-7G120-BA
96556A	Drum, CD4E Reverse (2 Clutch)	1	F3RZ-7D044-AA
96556A-2	Sleeve, CD4E Reverse Drum (Sonnax) Drum Must Be Machined	1	
96564	Piston Kit, CD4E Forward/Coast Clutch 1994-97 (W/Multiple Springs)	1	
96564B	Piston Kit, CD4E Forward/Coast Clutch 1998-Up (W/Coil Spring) Cast # RFF8	1	
96565	Piston Kit, CD4E Direct Clutch	1	
96566	Piston Kit, CD4E Reverse Clutch	1	
96567	Piston Kit, CD4E Low/Reverse Clutch	1	
96576	Clutch Hub, CD4E Reverse Clutch	1	F3RZ-7D391-A
96579	Clutch Hub, CD4E Coast Clutch	1	
96582	Planet, CD4E Forward (Low/Intermediate) (3 Gear) (Can Use 96582B)	1	F8RZ-7A398-AA
96582B	Planet, CD4E Forward (Low/Intermediate) (4 Gear) (Can Use 96582)	1	
96584B	Planet, CD4E Reverse (3 Gear) W/Low Reverse Clutch Hub	1	F3RZ-7D006-A
96592	Ring Gear, CD4E Forward Planet (Low/Intermediate)	1	F3RZ-7A153-C
96598	Ring Gear, CD4E Differential Planet (74 Teeth)	1	F4RZ-7F343-A
96598B	Ring Gear, CD4E Differential Planet (86 Teeth)	1	F3RZ-7F343-A
96612	Sun Gear, CD4E Forward W/Inner Race (Use 96646)	1	
96622	Shell, CD4E W/Reverse Sun Gear 1994-Up (58 Teeth)	1	F3RZ-7A626-A
96624	Shell, CD4E Direct W/Hub	1	F4RZ-7D064-A

PART #	SPRAGS & ONE WAY CLUTCHES	QTY.	REFERENCE #
96642	Sprag Assembly, CD4E Low Sprag W/Outer & Inner Races	1	F3RZ-7A089-B
96642E	Mechanical Diode, CD4E Low With Outer & Inner Races	1	
96646	Sprag Assembly, CD4E Forward Sprag W/Sun Gear 1994-97 (.370” Wide Elements)	1	F3RZ-7A089-A
96646A	Sprag Assembly, CD4E Forward Sprag W/Sun Gear 1998-Up (.307” Wide Elements)	1	F8RZ-7A089-AA
96652	Sprag, CD4E Low Sprag W/Out Outer & Inner Races	1	
96656	Sprag, CD4E Forward (.370” Wide Elements) 1994-97 (Metal Cage Is .590” Wide)	1	
96656A	Sprag, CD4E Forward (.307” Wide Elements) 1998-Up (Metal Cage Is .540” Wide)	1	
96667	Outer Race, CD4E Forward Sprag 1994-97	1	
96667B	Outer Race, CD4E Forward Sprag 1999-Up	1	

© Whatever It Takes Transmission Parts. Inc.

PART #	HARD PARTS (Continued)	QTY.	REFERENCE #
96671	Shaft, CD4E Pump Drive (14 1/16” Long)	1	F4RZ-7B328-C
96671A	Shaft, CD4E Pump Drive (14 3/4” Long)	1	F4RZ-7B328-B
96673	Shaft, CD4E Turbine (8 1/8” Long)	1	F3RZ-7F213-A
96673A	Shaft, CD4E Turbine (8 7/8” Long)	1	F4RZ-7F213-A
96694	Plate, CD4E Sprag Thrust	1	F3RZ-7B066-B
96700D	Chain, CD4E (45 Links, 3/4” Wide)	1	F6RZ-7G249-AA
96700DA	Chain, CD4E (45 Links, 1” Wide)	1	F6RZ-7G249-BA
96700E	Chain, CD4E (46 Links, .3/4” Wide)	1	F6RZ-7G249-CA
96700EA	Chain, CD4E (46 Links, 1” Wide)	1	F6RZ-7H245-AA
96701	Cover, CD4E Chain (Rear)	1	
96702	Cover, CD4E Chain (Front) (3 1/16” Tall Between Clips)	1	
96702A	Cover, CD4E Chain (Front) (1 1/2” Tall Between Clips)	1	
96705	Sprocket, CD4E Drive (55 Teeth) (.604” Thick) Reverse Planet Ring Gear	1	
96705A	Sprocket, CD4E Drive (56 Teeth) (1.100” Thick) Reverse Planet Ring Gear	1	
96705B	Sprocket, CD4E Drive (55 Teeth) (.850” Thick) Reverse Planet Ring Gear	1	
96706	Sprocket, CD4E Driven (50 Teeth) (.644” Thick Teeth) With 1.970”OD (26 Teeth Sun Gear)	1	
96706A	Sprocket, CD4E Driven (54 Teeth) (.654” Thick Teeth) With 1.730”OD (26 Teeth Sun Gear)	1	
96706AA	Sprocket, CD4E Driven (50 Teeth) (.644” Thick Teeth) With 1.730”OD (26 Teeth Sun Gear)	1	
96706AB	Sprocket, CD4E Driven (54 Teeth) (.654” Thick Teeth) With 1.970”OD (26 Teeth Sun Gear)	1	
96706B	Sprocket, CD4E Driven (46 Teeth) (1.150” Thick Teeth) With 1.730”OD (26 Teeth Sun Gear)	1	
96706BA	Sprocket, CD4E Driven (54 Teeth) (.895” Thick Teeth) With 1.965”OD (26 Teeth Sun Gear)	1	
96706BB	Sprocket, CD4E Driven (50 Teeth) (.900” Thick Teeth) With 1.965”OD (26 Teeth Sun Gear)	1	
96706BC	Sprocket, CD4E Driven (50 Teeth) (1.140” Thick Teeth) With 26 Teeth Sun Gear	1	
96706BD	Sprocket, CD4E Driven (55 Teeth) (.900” Thick Teeth) With 1.730”OD (26 Teeth Sun Gear)	1	
96706BE	Sprocket, CD4E Driven (54 Teeth)(.900” Thick Teeth) With 1.730”OD (26 Teeth Sun Gear)	1	
96706C	Sprocket, CD4E Driven (54 Teeth) (.644” Thick Teeth) With 1.730”OD (30 Teeth Sun Gear)	1	
96715	Differential Assembly, CD4E (26 Teeth Sun Gear) (24 Teeth Pinion Gears)(Smooth On The Neck, 1.415”OD Where Bushing # 064 Rides)	1	
96715AA	Differential Assembly, CD4E (26 Teeth Sun Gear)(24 Teeth Pinion Gears)(Smooth On The Neck, 1.805”OD Where Bushing # 064 Rides)	1	
96715B	Differential Assembly, CD4E (26 Teeth Sun Gear) (30 Teeth Pinion Gears)(Smooth On The Neck, 1.415”OD Where Bushing #064 Rides)	1	
96715BA	Differential Assembly, CD4E (26 Teeth Sun Gear (30 Teeth Pinion Gears)(With Smooth Neck 1.805”OD Where Bushing #064 Rides)	1	
96715C	Differential Assembly, CD4E (26 Teeth Sun Gear) (24 Teeth Pinion Gears)(With External Splines On The Neck , On The Bell Housing Side)	1	
96715CA	Differential Assembly, CD4E (26 Teeth Sun Gear) (30 Teeth Pinion Gears) (With External Splines On The Neck, On The Bell Housing Side)	1	
96740	Valve Body, CD4E W/Solenoid Pack 1994-96	1	
96740A	Valve Body, CD4E W/Solenoid Pack (CAST # RFF7) 1997-Up	1	

PART #	VALVE BODY COMPONENTS	QTY.	REFERENCE #
S96741BAAK	Master Repair Kit, CD4E (Must Use T-73840-MTL Tool Also)	1	73840-MK
S96741BAK	By Pass Kit, CD4E (Must Use T-73840-MTL Tool Also)	1	73840-BK
S96741CAK	Regulator Kit, CD4E (Must Use T-73840-MTL Tool Also)	1	73840-RK
S96741P-6K	End Plug Kit, CD4E Pressure Regulator Valve (Contains End Plug & O-Ring)(Sonnax)	1	
T-73840-MTL	Master Tool Kit, CD4E	1	
T-F-73840-TL	Reamer Kit, CD4E Pressure Regulator Valve (Reamer, Drill Jig & Guide Pin) (Sonnax) (Use With T-VB-FIX)	1	
T-73840-RM2	Reamer For Tool Kit T-73840-RTL	1	
T-73840-RTL	Tool Kit For S96741CAK	1	

PART #	HARD PARTS (Continued)	QTY.	REFERENCE #
96750	Bell Housing, CD4E (Starter At 11:00) Top Bolts 5 1/8”	1	
96750B	Bell Housing, CD4E (Starter At 11:00) Top Bolts 6 1/2”	1	
96750C	Bell Housing, CD4E (Starter At 11:00) Top Bolts 3 1/2”	1	
96750CA	Bell Housing, CD4E (Starter At 11:00) Top Bolts 3 1/2” AWD (Has 4 Raised Threaded Bosses By The Seal) (Cast # RFYL8P-7976-CA) Axle Seal Is 2.755”OD	1	
96750CB	Bell Housing, CD4E (Starter At 11:00) Top Bolts 3 1/2” 2WD (Has 4 Non-Threaded Bosses By The Seal (Cast # RFYL8P-7976-CA) No Speed-O Hole (Axle Seal Is 2.515”OD)	1	
96750D	Bell Housing, CD4E (Square Starter Hole At 2:00)(Top Bolts 5 1/8”) 2WD (Has 4 Raised Bosses By Axle Seal, 3 Are Threaded)(Cast # RFYL8P-7976-AA)(Axle Seal Is 2.515”OD)	1	
96750DA	Bell Housing, CD4E (Square Starter Hole At 2:00)(TopBolts 5 1/8”) AWD (Has 4 Raised Bosses By Axle Seal, 3 Are Threaded) (Cast # RFYL8P-7976-AA) (Axle Seal Is 2.755”OD)	1	
96760	Case, CD4E (No Sensor) 1994-98	1	
96760AA	Case, CD4E (Uses A Vehicle Speed Sensor) 1998-Up	1	

FORD

© Whatever It Takes Transmission Parts. Inc.

PART #	CASE COMPONENTS	QTY.	REFERENCE #
96761C	Valve, CD4E Thermostatic Oil Level Control	1	
T-Servo-Fix	Servo Pin Bore Reaming Fixture, CD4E (Sonnax)	1	

PART #	HARD PARTS (Continued)	QTY.	REFERENCE #
96766	Pan, CD4E Side (Vent Is Metal With Cap)	1	F4RZ-7G004-A
96766A	Pan, CD4E Side (Vent Is Just A Tube) With Raised Humps Around Each Bolt	1	F7RZ-7G004-AA
96766B	Pan, CD4E Side (Vent Is Just a Tube) Pan Is Flat Around The Bolt Holes For A Reusable Pan Gasket	1	
96779K	Bolt Set, CD4E Bottom Pan (14 Bolts)	1	
96847	Gear, CD4E Drive Speed-O (27 Teeth) On Differential	1	F3RZ-17285-A
96848	Gear, CD4E Driven Speed-O (23 Teeth) Slides Off Of Speed-O Housing	1	F5RZ-17271-D
96848A	Gear, CD4E Driven Speed-O (23 Teeth) Snap Ring Holds Gear To Housing)	1	
96853A	Waved Cushion, CD4E Forward Clutch 1998-Up	1	F8RZ-7E085-AA
96857	Cushion, CD4E Low/Reverse Clutch	1	F3RZ-7B070-A
66775A	Converter Nut, AXOD/AXODE/AX4S/AX4N Metric	1	
96876A	Snap Ring, CD4E Holds Forward Pressure Plate In (.054") 1994-97	1	F3DZ-7D483-E
96876B	Snap Ring, CD4E Holds Forward Pressure Plate In (.059") 1994-97	1	F3DZ-7D483-F
96876C	Snap Ring, CD4E Holds Forward Pressure Plate In (.064") 1994-97	1	F3DZ-7D483-G
96876D	Snap Ring, CD4E Holds Forward Pressure Plate In (.069") 1994-97	1	F3DZ-7D483-H
96876E	Snap Ring, CD4E Holds Forward Pressure Plate In (.056") 1998-Up	1	F8RZ-7D483-AA
96876EA	Snap Ring, CD4E Holds Forward Pressure Plate In (.065") 1998-Up	1	F8RZ-7D483-BA
96876EB	Snap Ring, CD4E Holds Forward Pressure Plate In (.070") 1998-Up	1	F8RZ-7D483-CA
96876EC	Snap Ring, CD4E Holds Forward Pressure Plate In (.077") 1998-Up	1	F8RZ-7D483-DA
96877	Snap Ring, CD4E Holds Forward Clutch Retainer In	1	F3RZ-7N169-A
96878A	Snap Ring, CD4E Holds Direct Clutch Pressure Plate In (.054")	1	F3RZ-7D483-E
96878B	Snap Ring, CD4E Holds Direct Clutch Pressure Plate In (.059")	1	F3RZ-7D483-F
96878C	Snap Ring, CD4E Holds Direct Clutch Pressure Plate In (.064")	1	F3RZ-7D483-G
96878D	Snap Ring, CD4E Holds Direct Clutch Pressure Plate In (.069")	1	F3RZ-7D483-H
96878E	Snap Ring, CD4E Holds Direct Clutch Pressure Plate In (.075")	1	
96879	Snap Ring, CD4E Holds Direct Clutch Retainer In	1	F3RZ-7C122-A
96881	Snap Ring, CD4E Holds Reverse Hub To Forward/Direct Drum (.033")	1	
96883	Snap Ring, CD4E Holds Low Sprag In Case	1	F3RZ-7D483-A
96885	Snap Ring, CD4E Holds Low/Reverse Clutch Retainer In	1	F3RZ-7D483-J
96887	Snap Ring, CD4E Holds Coast Clutch Hub To Sun Gear	1	F3RZ-7C122-B
96888	Snap Ring, CD4E Holds RetainerTo Sun Gear	1	
96892A	Snap Ring, CD4E Holds Reverse Clutch Pressure Plate In (.059")	1	F3RZ-7D483-B
96892B	Snap Ring, CD4E Holds Reverse Clutch Pressure Plate In (.064")	1	F3RZ-7D483-C
96892C	Snap Ring, CD4E Holds Reverse Clutch Pressure Plate In (.070")	1	F3RZ-7D483-D
96893	Snap Ring, CD4E Holds Reverse Clutch Retainer In Drum	1	F3RZ-7H225-A
96896	Snap Ring, CD4E Holds Overdrive Servo Cover In (.072" Thick) 1994-96	1	XS7Z-7H074-AA
96896B	Snap Ring, CD4E Holds Overdrive Servo Cover In (.092" Thick) 1997-Up	1	
96899	Snap Ring, CD4E Holds Differential Ring Gear In Bell Housing	1	F3RZ-7H106-A
96900	Servo Assembly, CD4E Overdrive (No Groove Pin) 1994-96	1	
96900A	Servo Assembly, CD4E Overdrive (1 Groove Pin) 1994-96	1	
96900B	Servo Assembly, CD4E Overdrive (2 Groove Pin) 1994-96	1	
96900C	Servo Assembly, CD4E Overdrive (1 Groove PIn) (Cast # F7RP) 1997-Up (Ford Probe Only)	1	
96901	Spring, CD4E Overdrive Servo	1	F3RZ-7H073-A
96902	Piston, CD4E Overdrive Servo (Bonded)	1	
96903K	Pin W/Piston & Spring, CD4E Overdrive Servo (No Groove) 1st Design 1994-Up	1	
96903AK	Pin W/Piston & Spring, CD4E Overdrive Servo (1 Groove) 1st Design 1994-Up	1	
96903BK	Pin W/Piston & Spring, CD4E Overdrive Servo (2 Groove) 1st Design 1994-Up	1	
96903CK	Pin W/Piston, CD4E Overdrive Servo (No Groove) 2nd Design (No Spring Type) 1/97-4/98 Only	1	F4RZ-7H188-F
96903DK	Pin W/Piston, CD4E Overdrive Servo (1 Groove) 2nd Design (No Spring Type) 1/97-4/98 Only	1	F4RZ-7H188-E
96903EK	Pin W/Piston, CD4E Overdrive Servo (2 Groove) 2nd Design (No Spring Type) 1/97-4/98 Only	1	F4RZ-7H188-D
96904	Cover, CD4E Overdrive Servo (Bonded)	1	F4RZ-7D027-A
S96935	Piston Kit, CD4E 2-4 Accumulator(Contains; Piston W/O-Rings, & Springs) (Sonnax)	1	73840-24
S96945	Piston Kit, CD4E Low/Reverse Accumulator(Contains; Piston W/O-Rings, & Springs) (Sonnax)	1	73840-LR
S96950	Piston Kit, CD4E Forward Accumulator(Contains; Piston W/O-Rings, & Springs) (Sonnax)	1	73840-FWD
96960AK	Piston Kit, CD4E (Bonded) 1994-Up (Contains: 96966, 96969, 96904)(The 96969 Is .445" Thick At The Outer Lip)(This Must Be Measured)	1	
96960BK	Piston Kit, CD4E (Bonded) 1998-Up (Contains: 96966, 96969A, 96904)(The 96969A Is .470" Thick At Outer Lip)(This Must Be Measured)	1	
96964	Piston Kit, CD4E Forward Clutch 1994-97	1	F3RZ-7A262-B
96964B	Piston Kit, CD4E Forward Clutch (Cast # RFF8) 1998-Up	1	F8RZ-7A262-AB
96965	Piston, CD4E Direct Clutch (Lip Seal Type)	1	F3RZ-7A262-A
96966	Piston, CD4E Reverse Clutch (Bonded)	1	F3RZ-7E079-A

© Whatever It Takes Transmission Parts. Inc.

PART #	HARD PARTS (Continued)	QTY.	REFERENCE #
96967	Piston, CD4E Low/Reverse Clutch	1	F3RZ-7D402-A
96969	Piston, CD4E Coast Clutch (Bonded)(.445” Thick At Outer Lip) 1994-Up	1	F3RZ-7A266-C
96969A	Piston, CD4E Coast Clutch (Bonded)(.470” Thick At Outer Lip) 1998-Up	1	F8RZ-7A262-BA
96974	Retainer W/Spring, CD4E Forward/Coast Clutch (With Multiple Springs) 1994-97	1	F3RZ-7G299-A
96974B	Retainer W/Spring, CD4E Forward/Coast Clutch (With 1 Coil Spring) 1998-Up	1	F8RZ-7G299-AA
96975	Retainer W/Springs, CD4E Direct Clutch	1	F4RZ-7F235-A
96976	Retainer W/Springs, CD4E Reverse Clutch	1	F3RZ-7G335-A
96977	Retainer W/Springs, CD4E Low/Reverse Clutch	1	F3RZ-7H064-A
96980	End Cap, CD4E Forward Sprag (Thick)	1	
96981	End Cap, CD4E Forward Sprag (Thin)	1	
96982	Retainer, CD4E Forward Sprag	1	
96991	Linkage Assembly, CD4E Internal (Complete Linkage Assembly)	1	
96992	Linkage, CD4E External Shift Lever (2 9/16” Long)	1	
96992A	Linkage, CD4E External Shift Lever (3 5/16” Long)	1	F7RZ-7A256-AA
96996	Fittings, CD4E Cooler Line To Case (Screw In Type)	2	
96999-1	Oil Tube, CD4E	1	F3RZ-7H207-A

© Whatever It Takes Transmission Parts. Inc.

© Whatever It Takes Transmission Parts. Inc.

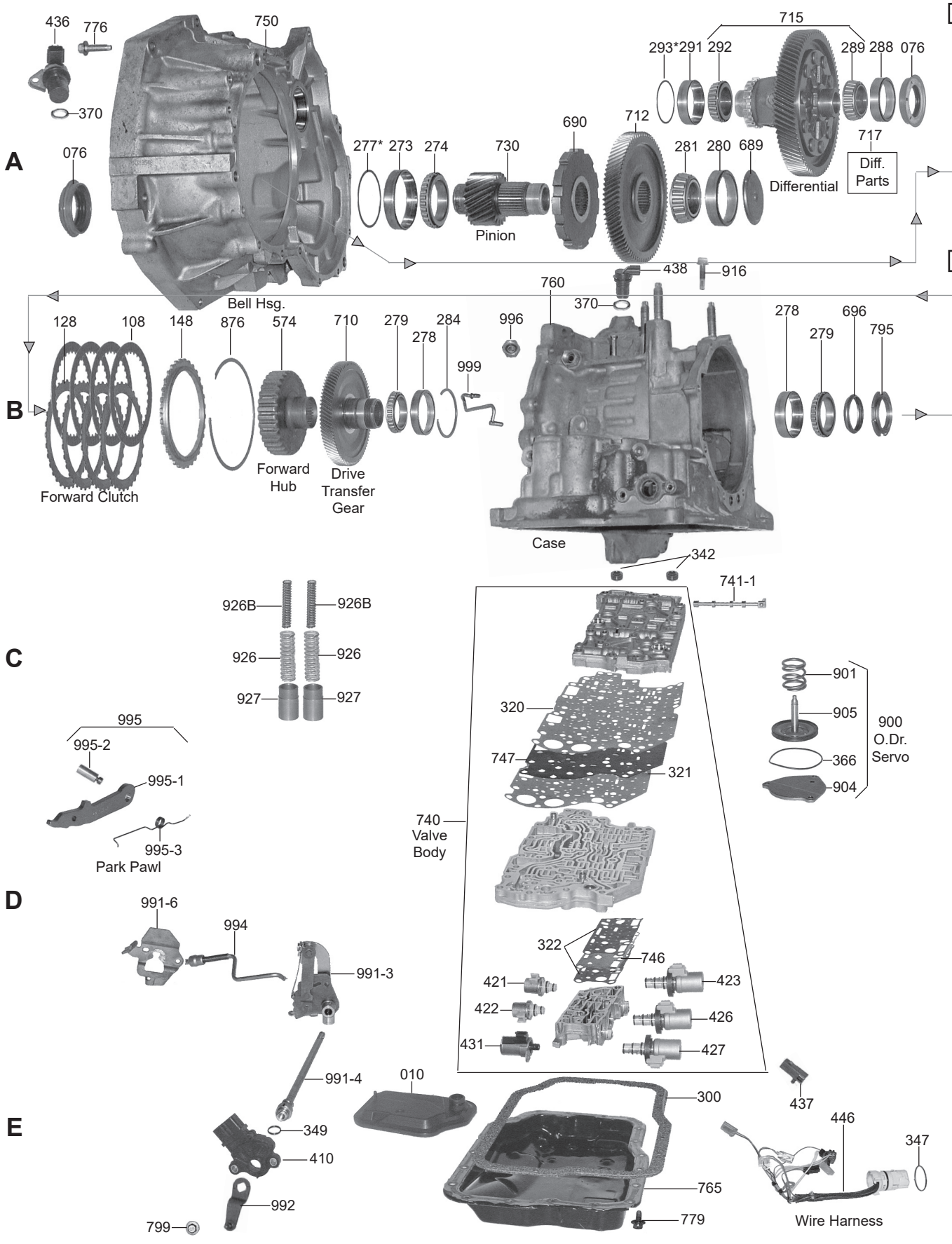

002 Overhaul Kits

004 Master L/ Steels Kit

006 Master W/ Steels Kit

011 Filter Kits

030 Bushing Kits

119 Friction Module

139 Steel Module

175 Ring Kit

400 Technical Manual

FORD

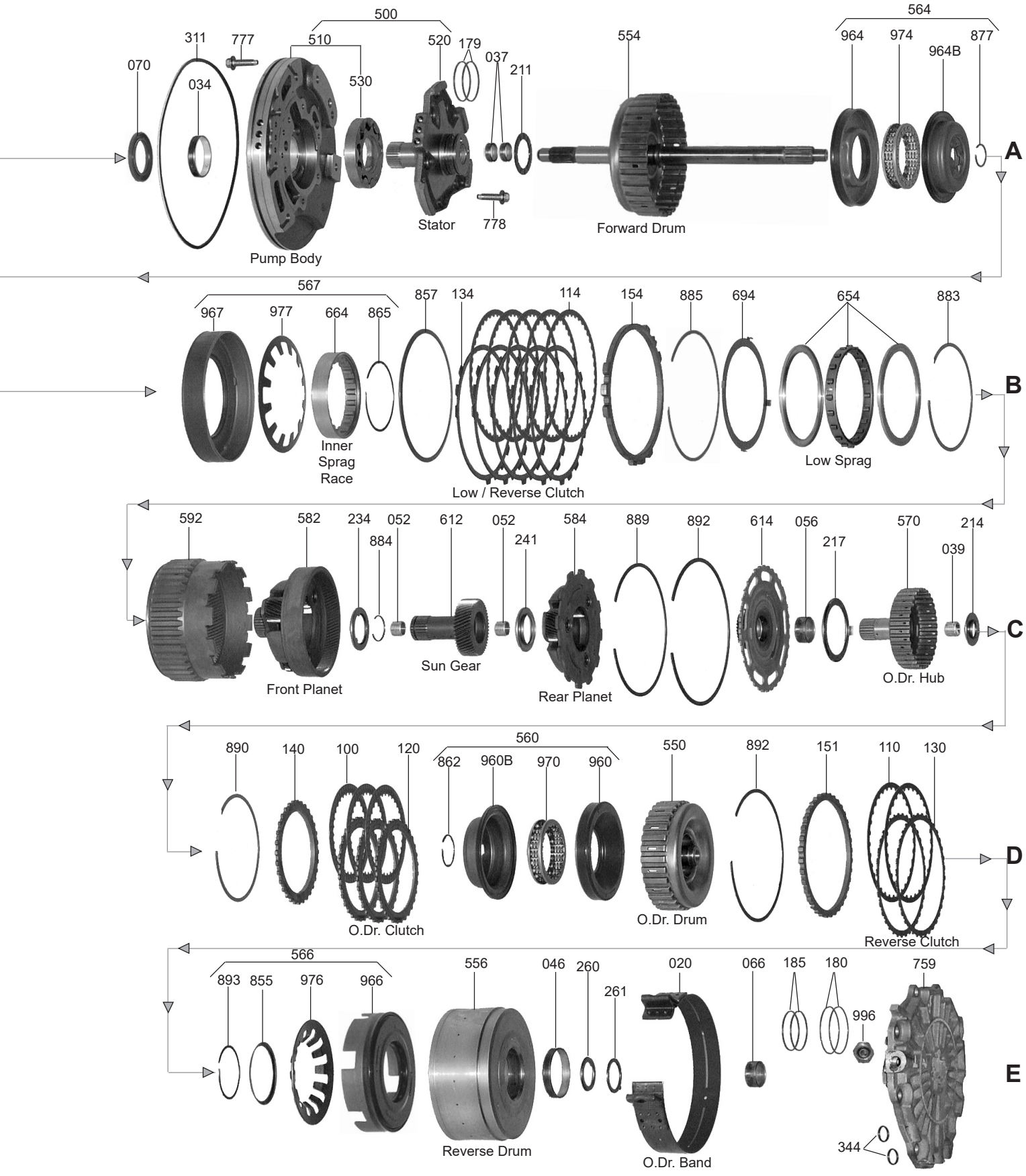

FORD

© Whatever It Takes Transmission Parts. Inc.

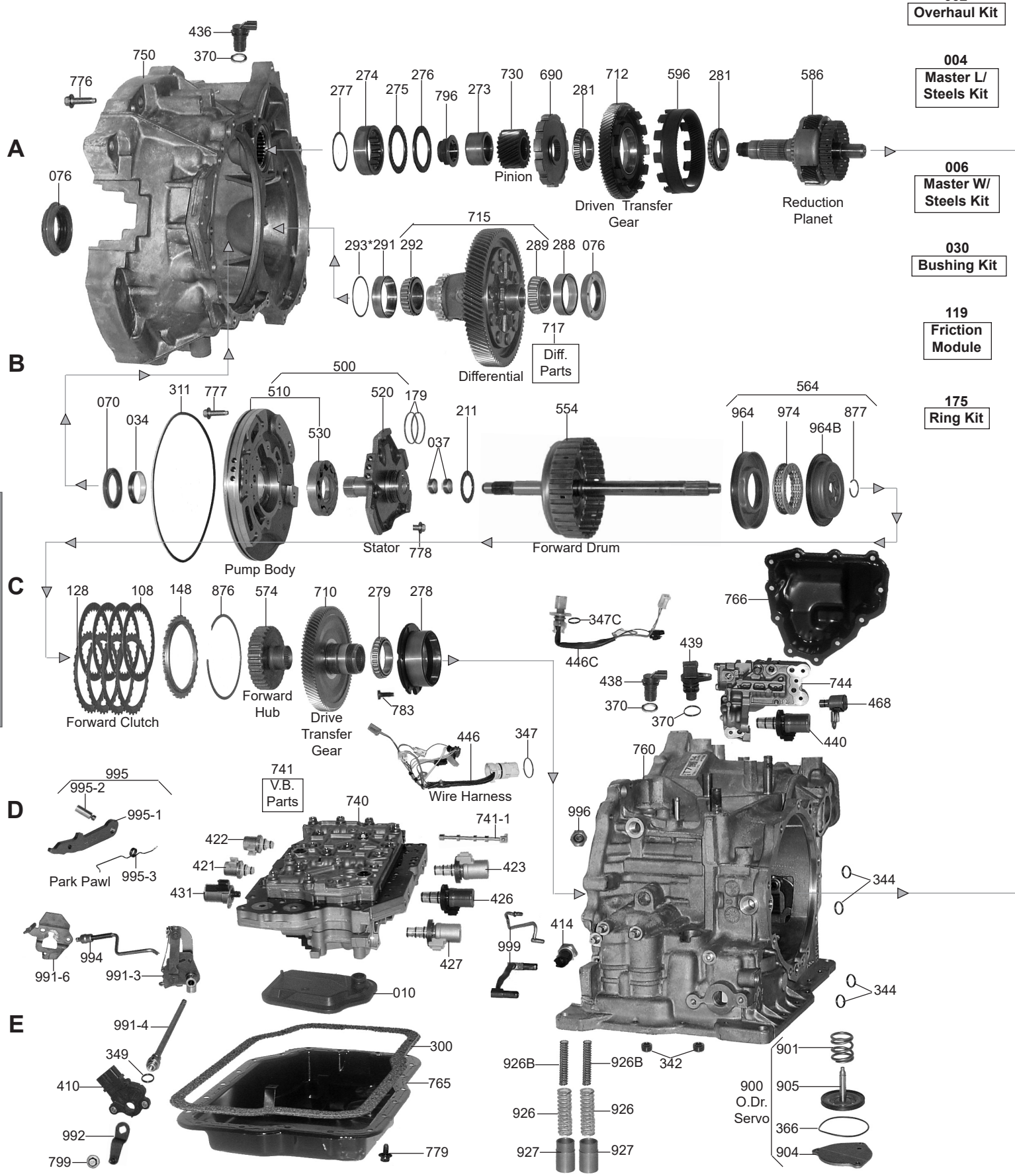

© Whatever It Takes Transmission Parts. Inc.

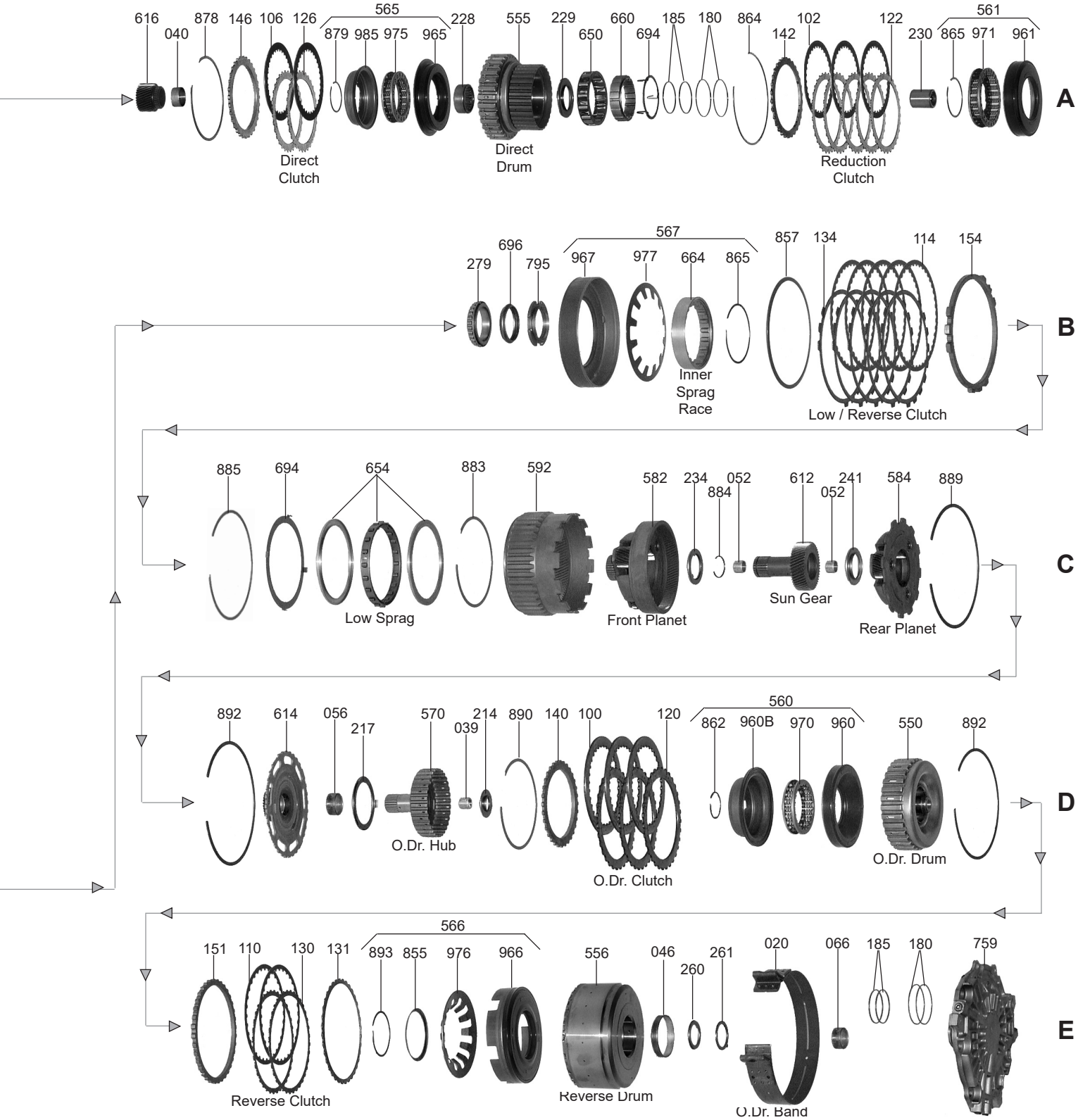

FORD

© Whatever It Takes Transmission Parts. Inc.

PART #	OVERHAUL KITS	QTY.	REFERENCE #
138002A	Overhaul Kit, 4F27E (Ford & Mazda) 1999-Up (For Bonded Pistons, Sell # 138960AK Or # 138960BK)	1	
138002BP	Overhaul Kit, 4F27E (Mazda, Protege)(With Bonded Pistons) 1999-Up	1	
138002BPF	Overhaul Kit, FN4A-EL (mazda) 1999-Up (With Pistons)	1	
138002C	Overhaul Kit, FNR5 2005-Up (For Bonded Pistons Sell 138960CK For Ford Or 138960DK For Mazda)	1	
138002CF	Overhaul Kit, FNR5 2005-Up (With Duraprene Pan & Valve Body Gaskets (For Bonded Pistons Sell 138960CK For Ford Or 138960DK For Mazda)	1	

PART #	MASTER L/STEEL KIT	QTY.	REFERENCE #
138004A	Master L/Steels Kit, 4F27E (Ford & Mazda) 1999-Up (For Bonded Pistons, Sell # 183960AK Or # 138960BK Seperately)	1	
138004AA	Master L/Steels Kit, 4F27E (FN4A-EL Mazda) (Uses 1 Sided Overdrive Frictions) 2003-Up (For Bonded Pistons Sell # 138960BK)	1	
138004C	Master L/Steels Kit, FNR5 2005-Up (For Bonded Pistons, Sell 138960CK For Ford Or 138960DK For Mazda)	1	
138004CF	Master L/Steels Kit, FNR5 2005-Up (With Duraprene Pan & Valve Body Gaskets)(For Bonded Pistons Sell 138960CK For Ford Or 138960DK For Mazda)	1	

PART #	MASTER W/STEEL KIT	QTY.	REFERENCE #
138006A	Master W/Steels Kit, 4F27E (Ford & Mazda) 1999-Up (For Bonded Pistons, Sell #138960AK Or #138960BK Seperately)	1	
138006AA	Master W/Steels Kit, 4F27E (FN4A-EL Mazda) (Uses 1 Sided Overdrive Frictions) 2003-Up (For Bonded Pistons, Sell # 138960BK)		
138006C	Master W/Steels Kit, FNR5 2005-Up (For Bonded Pistons Sell 138960CK For Ford Or 138960DK For Mazda)	1	
138006CF	Master W/Steels Kit, FNR5 2005-Up (With Duraprene Pan & Valve Body Gaskets)(For Bonded Pistons Sell 138960CK For Ford Or 138960DK For Mazda)	1	

PART #	FILTER	QTY.	REFERENCE #
138010A	Filter, 4F27E (Ford & Mazda) (5/8" Tall Pick-Up) 1999-Up	1	XS4Z-7A098-AB
138010C	Filter, FNR5/4F27E (Some) (1 3/8" Tall Pick-Up) 2004-Up	1	

PART #	FILTER KIT	QTY.	REFERENCE #
138011A	Filter Kit, 4F27E (Ford & Mazda) 1999-Up	1	

PART #	BANDS	QTY.	REFERENCE #
138020A	Band, 4F27E/FNR5 Overdrive (1 3/8" Wide) 1999-Up	1	XS4Z-7D034-AB

PART #	BUSHINGS	QTY.	REFERENCE #
138030A	Bushing Kit, 4F27E 1999-Up	1	
138030C	Bushing Kit, FNR5 2005-Up	1	
138034A	Bushing, 4F27E Pump Body (Smooth Inside)	1	
138034C	Bushing, FNR5 Pump Body With Oil Pockets Inside (Babbit) 2005-Up	1	
138037A	Bushing, 4F27E Stator (Rear) 1999-Up	1	
S138037AK	Bushing Set, 4F27E Stator (Rear) (2 Pieces) 1999-Up (Sonnax)	1	46000-01K
138039A	Use 138052A	1	
138039C	Use 138052C	1	
138040C	Bushing, FNR5 Reduction Planet Sun Gear (1.110"OD)(1.020"ID) 2005-Up	1	
138046A	Bushing, 4F27E Reverse Drum (2.157"ID) (Babbit) 1999-Up (Can Use 42046E)	1	
42046E	Bushing, 4F27E Reverse Drum (2.157"ID) 1999-Up	1	
138046C	Bushing, FNR5 Reverse Drum (2.170"ID) (Bronze) 2005-Up	1	
138052A	Bushing, 4F27E Front Sun Gear (.725"ID)(Babbit) 1999-Up (Also Fits 4F27E #039 1999-Up)	2-3	
138052C	Bushing, FNR5 Front Sun Gear (.725"ID)(Bronze) 2005-Up (Also Fits FNR5 #039 2005-Up)	2-3	
138056A	Bushing, 4F27E Rear Sun Gear (1.042"ID) 1999-Up	1	
138056C	Bushing, FNR5 Rear Sun Gear (1.182"ID) 2005-Up	1	
138066A	Bushing, 4F27E Rear Cover (Babbit) (.920"ID) 1999-Up	1	
138066C	Bushing, FNR5 Rear Cover (Bronze) (.920"ID) 2005-Up	1	

© Whatever It Takes Transmission Parts. Inc.

PART #	METAL CLAD SEALS	QTY.	REFERENCE #
138070A	Seal, 4F27E/FNR5 Front 1999-Up	1	XS4Z-7A248-AA
42076A	Seal, 4F27E/FNR5 Axle (Both Sides) (.395" Thick)(2.205"OD) 1999-Up	2	F004-27-238
138076B	Seal, 4F27E (Ford) Axle (Both Sides)(With Flange) 2000-Up	2	XS4Z-1177-AA
138076C	Seal, FNR5 Axle (Both Sides)(No Flange) 2005-Up (Use 42076A)	1	

PART #	FRICTION CLUTCH	QTY.	REFERENCE #
138100A	Use 138108A For Frictions That Are 2 Sided	3	XS4Z-7B164-CB
138100C	Friction, 4F27E (Mazda)/FNR5 Overdrive Clutch (.100") 32 Internal Teeth (1 Sided) (4.510"OD) 2003-Up	3	
138102C	Use 138106C	3	
138106C	Friction, FNR5 Direct Clutch (.071") (32 Teeth) (4.525"OD) 2005-Up (Also Fits FNR5 Reduction Clutch # 102)	2-5	
138108A	Friction, 4F27E/FNR5 Forward Clutch (.063") (32 Teeth) (4.530"OD) 1999-Up (Also Fits 4F27E Overdrive Clutch That Are 2 Sided 1999-Up)	3-7	XS4Z-7B164-CB
138110A	Friction, 4F27E/FNR5 Reverse Clutch (.064") (32 Teeth) (5 1/2"OD) 1999-Up	2	XS4Z-7B164-AB
138114A	Friction, 4F27E Low/Reverse (.063") (42 Teeth) (6 1/8"OD) 1999-Up	5	XS4Z-7B164-BB
138119A	Friction Module, 4F27E 1999-Up (All With 2 Sided Overdrive Frictions)	1	
138119AA	Friction Module, FN4A-EL Mazda 2003-Up (With Single Sided Overdrive Frictions)	1	
138119AS1	Friction Module, 4F27E 1999-Up (Stage 1)	1	
138119C	Friction Module, FNR5 2005-Up	1	

PART #	STEEL CLUTCH	QTY.	REFERENCE #
138120A	Steel, 4F27E Overdrive Clutch (.138" Thick) (32 Teeth) (3.710"ID) 1999-Up	3	XS4Z-7B442-DB
138120B	Steel, 4F27E Overdrive Clutch .063" (32 Teeth) (3.715"ID) 1999-Up (Use 138128A)	3	XS4Z-7B442-CB
138120C	Friction, 4F27E (Mazda)/FNR5 Overdrive Clutch (.100") 32 External Teeth (1 Sided) (3.745"ID) 2003-Up	3	
138122C	Steel, FNR5 Reduction Clutch (.061") (30 Teeth) (3.870"ID) 2005-Up	5	
138126C	Use 138128A	3	
138128A	Steel, 4F27E/FNR5 Forward Clutch (.063") (32 Teeth) (3.715"ID) 1999-Up (Also Fits FNR5 Overdrive Clutch #126 2005-Up)	3-7	XS4Z-7B442-CB
138130A	Steel, 4F27E/FNR5 Reverse Clutch (.063") (36 Teeth) (5.022"ID) 1999-Up	2	XS4Z-7B442-AB
138130AA	Steel, 4F27E/FNR5 Reverse Clutch (.082") (36 Teeth) (5.022"ID) 1999-Up	2	
138131C	Steel, FNR5 Reverse Clutch (Bottom, Beveled) (.082") (36 Teeth) (5.110"ID) 2005-Up	1	
138134A	Steel, 4F27E/FNR5 Low/Reverse Clutch (.063") (12 Teeth) (5.621"ID) 1999-Up	5	XS4Z-7B442-BB
138139A	Steel Module, 4F27E 1999-Up (With All 2 Sided Overdrive Frictions)	1	

PART #	CLUTCH PRESSURE PLATES	QTY.	REFERENCE #
138140A	Use 138148A	1	
138142C	Pressure Plate, FNR5 Reduction Clutch (.138") (32 Teeth) (3.865"ID) 2005-Up	1	
138146C	Pressure Plate, FNR5 Direct Clutch (.119") (32 Teeth) (3.710"ID) (Stepped) 2005-Up	1	
138148A	Pressure Plate, 4F27E/FNR5 Forward Clutch Stepped (.116"/.230") (32 Teeth) (3.705"ID) (Also Fits 4F27E/FNR5 Overdrive Clutch # 140 1999-Up)	1-2	XS4Z-7B066-CB
138151A	Pressure Plate, 4F27E/FNR5 Reverse Clutch (Top) (.226") (36 Teeth) (5.020"ID) 1999-Up	1	XS4Z-7B066-AB
138154A	Pressure Plate, 4F27E/FNR5 Low/Reverse Clutch (.241") (9 Teeth) (5.625"ID) 1999-Up	1	XS4Z-7B066-BB

PART #	VALVE BODY KITS	QTY.	REFERENCE #
S138165A	Valve Body Kit, 4F27E/FNR5 (FN4A-EL/FS5A-EL) 1999-Up (Superior)	1	
T138165A	Shift Kit, 4F27E/FNR5 (FN4A-EL/FS5A-EL) 1999-Up (Transgo)	1	

PART #	OIL SEALING RINGS	QTY.	REFERENCE #
138175A	Ring Kit, 4F27E (Ford, Focus) 2000-Up	1	
138175C	Ring Kit, FNR5 2005-Up	1	
138179AT	Ring, 4F27E/FNR5 Stator (1.855"OD)(Teflon) 1999-Up	2	

PART #	WASHERS & BEARINGS	QTY.	REFERENCE #
138211A	Washer, 4F27E Stator To Forward Drum (.075" Thick) (1.860"OD) (Plastic) 1999-Up	1	XS4Z-7H042-AB
138214A	Bearing W/Races, 4F27E/FNR5 Overdrive Hub To Drum (1.533"OD) (.790"ID) 1999-Up	1	
138217A	Bearing W/Races, 4F27E Rear Sungear To Hub (.117" Thick) (2.900"OD) (With 3 Raised Tabs) 1999-Up	1	
138217B	Bearing W/Races, 4F27E/FNR5 Rear Sungear To Hub (.117" Thick) (3.072"OD) (With 4 Flat Tabs) 1999-Up	1	XS4Z-7C041-AB
138228C	Caged Needle Bearing, FNR5 Direct Clutch Drum (Inner) (Cast # NTN HK2512F) 2005-Up	1	

© Whatever It Takes Transmission Parts. Inc.

PART #	WASHERS & BEARINGS (Continued)	QTY.	REFERENCE #
138229C	Bearing W/Races, FNR5 Direct Clutch Drum To Case (.141" Thick) (1.820"OD) (1.115"ID) 2005-Up	1	
138234A	Bearing W/Races, 4F27E/FNR5 Front Planet To Sungear (1.995"OD) (.145" Thick) 1999-Up	1	XS4Z-7H375-AB
138241A	Bearing W/Races, 4F27E/FNR5 Front Sungear To Rear Planet (2.035"OD) (1.340"ID) 1999-Up	1	XS4Z-7H337-AB
138260A	Bearing W/Race, 4F27E Overdrive Drum To Rear Cover (.100" Thick) (1.566"OD) (1.069"ID) 1999-Up	1	XS4Z-7D234-AC
138260B	Bearing W/Race, 4F27E/FNR5 Overdrive Drum To Rear Cover (.088" Thick) (1.566"OD) (1.089"ID) 1999-Up	1	
138261AA	Race, 4F27E Overdrive Drum To Rear Cover (1 Tab) (.059" Thick) 1.575"OD (1.213"ID) 1999-Up	1	XS4Z-7G262-FB
138261AB	Race, 4F27E Overdrive Drum To Rear Cover (1 Tab) (.067" Thick) 1.575"OD (1.213"ID) 1999-Up	1	XS4Z-7G262-FC
138261AC	Race, 4F27E Overdrive Drum To Rear Cover (1 Tab) (.070" Thick) 1.575"OD (1.213"ID) 1999-Up	1	XS4Z-7G262-AB
138261AD	Race, 4F27E Overdrive Drum To Rear Cover (1 Tab) (.075" Thick) 1.575"OD (1.213"ID) 1999-Up	1	XS4Z-7G262-FD
138261AE	Race, 4F27E Overdrive Drum To Rear Cover (1 Tab) (.078" Thick) 1.575"OD (1.213"ID) 1999-Up	1	XS4Z-7G262-BB
138261AF	Race, 4F27E Overdrive Drum To Rear Cover (1 Tab) (.083" Thick) 1.575"OD (1.213"ID) 1999-Up	1	XS4Z-7G262-FE
138261AG	Race, 4F27E Overdrive Drum To Rear Cover (1 Tab) (.086" Thick) 1.575"OD (1.213"ID) 1999-Up	1	XS4Z-7G262-CB
138261AH	Race, 4F27E Overdrive Drum To Rear Cover (1 Tab) (.090" Thick) 1.575"OD (1.213"ID) 1999-Up	1	XS4Z-7G262-FF
138261AJ	Race, 4F27E Overdrive Drum To Rear Cover (1 Tab) (.094" Thick) 1.575"OD (1.213"ID) 1999-Up	1	XS4Z-7G262-DB
138261AK	Race, 4F27E Overdrive Drum To Rear Cover (1 Tab) (.102" Thick) 1.575"OD (1.213"ID) 1999-Up	1	XS4Z-7G262-EB
138261AL	Race, 4F27E Overdrive Drum To Rear Cover (1 Tab) (.110" Thick) 1.575"OD (1.213"ID) 1999-Up	1	XS4Z-7G262-FG
138261CA	Race, FNR5 Overdrive Drum To Rear Cover (1 Tab) (.059" Thick) (1.575"OD) (1.130"ID) 2005-Up	1	
138261CB	Race, FNR5 Overdrive Drum To Rear Cover (1 Tab) (.067" Thick) (1.575"OD) (1.130"ID) 2005-Up	1	
138261CC	Race, FNR5 Overdrive Drum To Rear Cover (1 Tab) (.070" Thick) (1.575"OD) (1.130"ID) 2005-Up	1	
138261CD	Race, FNR5 Overdrive Drum To Rear Cover (1 Tab) (.075" Thick) (1.575"OD) (1.130"ID) 2005-Up	1	
138261CE	Race, FNR5 Overdrive Drum To Rear Cover (1 Tab) (.078" Thick) (1.575"OD) (1.130"ID) 2005-Up	1	
138261CF	Race, FNR5 Overdrive Drum To Rear Cover (1 Tab) (.083" Thick) (1.575"OD) (1.130"ID) 2005-Up	1	
138261CG	Race, FNR5 Overdrive Drum To Rear Cover (1 Tab) (.086" Thick) (1.575"OD) (1.130"ID) 2005-Up	1	
138261CH	Race, FNR5 Overdrive Drum To Rear Cover (1 Tab) (.090" Thick) (1.575"OD) (1.130"ID) 2005-Up	1	
138261CJ	Race, FNR5 Overdrive Drum To Rear Cover (1 Tab) (.094" Thick) (1.575"OD) (1.130"ID) 2005-Up	1	
138261CK	Race, FNR5 Overdrive Drum To Rear Cover (1 Tab) (.102" Thick) (1.575"OD) (1.130"ID) 2005-Up	1	
138261CL	Race, FNR5 Overdrive Drum To Rear Cover (1 Tab) (.110" Thick) (1.575"OD) (1.130"ID) 2005-Up	1	
138273A	Cup Race, 4F27E Pinion Bearing To Bell Housing (NP237427 Timken) (2.440"OD) 1999-Up (Also Fits Pinion Bearing To Case #280)	1-2	
138273C	Inner Race, FNR5 Reduction Planet Shaft To Roller Bearing # 274 (.900" Thick)(1.610"OD) (1.220"ID) (Cast # KOYO 06NU0623) 2005-Up	1	
138274A	Cone Bearing, 4F27E Pinion To Bell Housing (NP 986901 Timken) 1999-Up (Also Fits Pinion To Case # 281)	1-2	
138274AK	Bearing/Race Set, 4F27E Pinion To Bell Housing (NP 986901 Timken Bearing) 1999-Up (Also Fits 4F27E Pinion To Case)	1	XS4Z-7H338-AB
138274C	Roller Bearing, FNR5 Pinion To Bell Housing (15 Rollers)(.685" Thick)(2.445"OD) 2005-Up	1	
138275A	Bearing, FNR5 Pinion Race #276 To Roller Bearing # 274 (.079" Thick)(2.368"OD)(1.619"ID) 2005-Up	1	
138276A	Race, FNR5 Pinion Gear To Bearing #275 (.087" Thick)(2.314"OD)(1.624"ID) 2005-Up	1	
138277AA	Shim, 4F27E Pinion To Bell Housing (.019" Thick)(2.405"OD) 1999-Up	1	XS4Z-7H367-AB
138277AB	Shim, 4F27E Pinion To Bell Housing (.021" Thick)(2.405"OD) 1999-Up	1	XS4Z-7H367-BB
138277AC	Shim, 4F27E Pinion To Bell Housing (.023" Thick)(2.405"OD) 1999-Up	1	XS4Z-7H367-CB
138277AD	Shim, 4F27E Pinion To Bell Housing (.025" Thick)(2.405"OD) 1999-Up	1	XS4Z-7H367-DB

© Whatever It Takes Transmission Parts. Inc.

138277AE	Shim, 4F27E Pinion To Bell Housing (.027" Thick)(2.405"OD) 1999-Up	1	XS4Z-7H367-EB
138277AF	Shim, 4F27E Pinion To Bell Housing (.029" Thick)(2.405"OD) 1999-Up	1	XS4Z-7H367-FB
138277AG	Shim, 4F27E Pinion To Bell Housing (.031" Thick)(2.405"OD) 1999-Up	1	XS4Z-7H367-GB
138277AH	Shim, 4F27E Pinion To Bell Housing (.033" Thick)(2.405"OD) 1999-Up	1	XS4Z-7H367-HB
138277AJ	Shim, 4F27E Pinion To Bell Housing (.035" Thick)(2.405"OD) 1999-Up	1	XS4Z-7H367-JB
138277AK	Shim, 4F27E Pinion To Bell Housing (.037" Thick)(2.405"OD) 1999-Up	1	XS4Z-7H367-KB
138277AL	Shim, 4F27E Pinion To Bell Housing (.039" Thick)(2.405"OD) 1999-Up	1	XS4Z-7H367-LB
138277AM	Shim, 4F27E Pinion To Bell Housing (.041" Thick)(2.405"OD) 1999-Up	1	XS4Z-7H367-MB
138277AN	Shim, 4F27E Pinion To Bell Housing (.043" Thick)(2.405"OD) 1999-Up	1	XS4Z-7H367-NB
138277AP	Shim, 4F27E Pinion To Bell Housing (.045" Thick)(2.405"OD) 1999-Up	1	XS4Z-7H367-PB
138277AR	Shim, 4F27E Pinion To Bell Housing (.047" Thick)(2.405"OD) 1999-Up	1	XS4Z-7H367-RB
138277AS	Shim, 4F27E Pinion To Bell Housing (.049" Thick)(2.405"OD) 1999-Up	1	XS4Z-7H367-SB
138277AT	Shim, 4F27E Pinion To Bell Housing (.051" Thick)(2.405"OD) 1999-Up	1	XS4Z-7H367-TB
138277C	Shim, FNR5 Pinion Bearing #274 To Bell Housing (.032" Thick) (2.393"OD)(2.095"ID) 2005-Up	1	
138278A	Cup Race, 4F27E Drive Transfer Gear (P900 NP844242 Timken) 1999-Up	1	
138278B	Cup Race, 4F27E Drive Transfer Gear (Cast # NP 909383 097 19USA) 1999-Up	1	
138278C	Cup Race W/Flange, FNR5 Drive Transfer Gear (Double Race W/6 Bolt Flange) 2005-Up	1	
138279A	Cone Bearing, 4F27E Drive Transfer Gear (25 Rollers)(Cast #P900 NP724285 Timken) 1999-Up	1	
138279AA	Cone Bearing, 4F27E Drive Transfer Gear (30 Rollers) 1999-Up (Cast # P900 NP 552135 097 Timken)	1	
138279C	Cone Bearing, FNR5 Drive Transfer Gear (25 Rollers) 2005-Up (Cast # NSK HTF AR45-19AG)	1	
138280A	Cup Race, 4F27E Pinion Bearing To Case (NP237427 Timken) (2.440"OD) 1999-Up (Use 138273A)	1	
138280C	Cup Race, FNR5 Reduction Planet To Driven Transfer Gear (Stays In Drive Transfer Gear) 2005-Up	1	
138281A	Cone Bearing, 4F27E Pinion To Case (NP 986901 Timken) 1999-Up (Use 138274A)	1	
138281C	Cone Bearing, FNR5 Driven Transfer Gear (Both Sides)(28 Rollers)(.510"Thick)(1.495"ID) (Cast # KOYO 46T080703-1) 2005-Up	2	
138284A	Shim, 4F27E Drive Preload (.098" Thick) (2.965"OD) 1999-Up	1	XS4Z-7H106-AB
138288A	Cup Race, 4F27E Differential To Case (2.560"OD)(.610" Wide) (Cast #NP552557 Timken) 1999-Up (Also Fits 4F27E Differential To Bell Housing # 291)	1-2	
138288C	Cup Race, FNR5 Differential To Case (2.5560"OD)(.575"Wide) (Cast # NTN ECO CR-08A48) 2005-Up (Also Fits FNR5 Differential To Bell #291)	1-2	
138289A	Cone Bearing, 4F27E Differential To Case (23 Rollers) (Cast #NP320786) Also Fits 4F27E Differential To Bell Housing #292 1999-Up)	1-2	
138289AK	Bearing/Race Set, 4F27E Differential To Case (Bearing # NP320786) 1999-Up (Also Fits Differential To Bell Housing #291 & #292)	1-2	XS4Z-4221-AA
138289C	Cone Bearing, FNR5 Differential To Case (25 Rolers)(Cast # NTN ECO-CR-08A67) 2005-Up (Also Fits FNR5 Differential To Bell Housing #292)	1-2	
138291A	Cup Race, 4F27E Differential To Bell Housing (2.560"OD) (NP552557 Timken) 1999-Up (Use 138288A)	1	
138292A	Cone Bearing, 4F27E Differential To Bell Housing (1.573"ID) (NP320786) 1999-Up (Use 138289A)	1	
138293AA	Shim, 4F27E Differential To Bell Housing (.023" Thick) (2.525"OD) 1999-Up	1	XS4Z-4067-CA
138293AB	Shim, 4F27E Differential To Bell Housing (.025" Thick) (2.525"OD) 1999-Up	1	XS4Z-4067-DA
138293AC	Shim, 4F27E Differential To Bell Housing (.027" Thick) (2.525"OD) 1999-Up	1	XS4Z-4067-EA
138293AD	Shim, 4F27E Differential To Bell Housing (.029" Thick) (2.525"OD) 1999-Up	1	XS4Z-4067-FA
138293AE	Shim, 4F27E Differential To Bell Housing (.031" Thick) (2.525"OD) 1999-Up	1	XS4Z-4067-GA
138293AF	Shim, 4F27E Differential To Bell Housing (.033" Thick) (2.525"OD) 1999-Up	1	XS4Z-4067-HA
138293AG	Shim, 4F27E Differential To Bell Housing (.035" Thick) (2.525"OD) 1999-Up	1	XS4Z-4067-JA
138293AH	Shim, 4F27E Differential To Bell Housing (.037" Thick) (2.525"OD) 1999-Up	1	XS4Z-4067-KA
138293AJ	Shim, 4F27E Differential To Bell Housing (.039" Thick) (2.525"OD) 1999-Up	1	XS4Z-4067-LA
138293AK	Shim, 4F27E Differential To Bell Housing (.041" Thick) (2.525"OD) 1999-Up	1	XS4Z-4067-MA
138293AL	Shim, 4F27E Differential To Bell Housing (.043" Thick) (2.525"OD) 1999-Up	1	XS4Z-4067-NA
138293AM	Shim, 4F27E Differential To Bell Housing (.045" Thick) (2.525"OD) 1999-Up	1	XS4Z-4067-PA

PART #	GASKETS & RUBBER COMPONENTS	QTY.	REFERENCE #
138300AF	Gasket, 4F27E/4F27E Bottom Pan (Farpak) 1999-Up	1	
138311A	Lathe Cut Seal, 4F27E (Ford) Pump Body 2000-05	1	
138311B	O-Ring, 4F27E (Mazda)/FNR5 Pump Body 1999-Up	1	
138320A	Gasket, 4F27E Valve Body Plate To Upper Valve Body 1999-Up (Also Fits 4F27E Lower Valve Body To Plate #321 1999-Up)	1-2	
138320B	Gasket, FNR5 Valve Body Plate To Upper Valve Body 2005-Up	1	
138321A	Use 138320A	1	
138322-1A	Gasket, 4F27E Solenoid Control Body To Plate (Lower) 1999-Up	1	
138322A	Gasket, 4F27E Solenoid Control Plate To Valve Body (Upper) 1999-Up	1	
138376AK	O-Ring Set, 4F27E Solenoid (Valve Body Sub Kit) 1999-Up	1	
138376CK	O-Ring Set, FNR5 Solenoid (Valve Body Sub Kit) 2005-Up	1	

© Whatever It Takes Transmission Parts. Inc.

PART #	TECHNICAL MANUALS	QTY.	REFERENCE #
138400A	Technical Manual, 4F27E 1999-Up (Atra)	1	
138400A-S	Technical Manual, 4F27E 1999-Up (Spanish)	1	
A138400A	Rebuild Manual, 4F27E (ATRA)	1	
A138400D	Identification, Diagnosis & Testing Manual, 4F27E (ATRA)	1	

PART #	ELECTRICAL COMPONENTS	QTY.	REFERENCE #
138410A	Switch, 4F27E (Ford Focus) Neutral Safety (9 Prong) (Cast # 4P-7F293-AB) 2000-4/04	1	5S4Z-7F293-AA
138414C	Switch, FNR5 Pressure Sensor (1 Wire) (Screw-On)(Cast # PPS-GF40) 2005-Up	1	
138421A	Solenoid, 4F27E Shift “A” (On/Off) 2000-Up (Also Fits 4F27E Shift “B” # 422 (Also Called Lock-Up) 2000-Up)(For Mazda FN4AEL This Solenoid Is Called “D” & “E” Shift)	2-3	XS4Z-7H148-AA
138421C	Solenoid, FNR5 Shift “A” 2005-Up (Also FNR5 Shift “B” #422 (Also Called Lock-Up) 2005-Up)	1-2	
138422A	Solenoid, 4F27E Shift “B” (Also Called Lock-Up)(Use 138421A) 2000-Up	1	
138422C	Solenoid, FNR5 Shift “B” (Also Called Lock-Up)(Use 138421C) 2005-Up	1	
138423A	Solenoid, 4F27E/FNR5 Shift “D” (PWM) 2000-Up (Also Fits 4F27E/FNR5 Shift “E” # 426 & Shift “C” #427 2000-Up)(Also Fits FNR5 #440 Solenoid 2005-Up)(For Mazda FN4AEL This Solenoid Is Called “A” & “B” & “C” Shift)	1-3	XS4Z-7G484-AA
138426A	Solenoid, 4F27E/FNR5 Shift “E” (Use 138423A) 2000-Up	1	
138427A	Use 138423A.	1	
138431A	Solenoid, 4F27E/FNR5 EPC 2000-Up	1	XS4Z-7G383-AA
138436A	Sensor, 4F27E (Ford, Focus) Speed (2 Prong) (Cast # XS4P) 2000-5/05	1	
138436C	Sensor, FNR5 Output Speed (3 Prong)(1 Bolt)(Cast # G4TO-8671) 2005-Up (Also Fits FNR5 TSS #439 2005-Up)	1	
86437	Sensor, 4F27E TOT/TFT 1999-Up	1	
138438A	Sensor, 4F27E Input (In Case) (Cast # XS4P-7M101-AB) 1999-5/05	1	XS4Z-7M101-AB
138438C	Sensor, FNR5 Input (In Case) 2 Prong (Cast # G4TO-0190) 2005-Up	1	
138439C	Use 138436C	1	
138440C	Solenoid, FNR5 Shift (Use 138423A) 2005-Up	1	
138446A	Wire Harness, 4F27E Internal (9 Prong Case Connector, Five 2 Prong Connectors, Two 1 Prong Connectors & One Ground Terminal) 1999-Up	1	XS4Z-7G276-AB
138446AA	Wire Harness, 4F27E/FNR5 Internal (9 Prong Case Connector, Four 2 Prong Connectors, Two 1 Prong Connectors, 1 Ground Terminal & Temperature Sensor) 2005-Up	1	
138446C-1	Wire Harness, FNR5 Auxillary Valve Body (2 Blade Connector)(10 1/2” Long) 2005-Up	1	
138468C	Solenoid, FNR5 (1 Blade Connector, With 1 Bolt Bracket)(This Is The Small Solenoid On The Auxillary Valve Body) 2005-Up	1	

PART #	MISC. COMPONENTS	QTY.	REFERENCE #
138494	Dipstick, 4F27E With Tube (27” Tube Length) 1999-Up	1	

PART #	HARD PARTS	QTY.	REFERENCE #
138500A	Pump, 4F27E (Uses A Body With A Lathe Cut Seal, With .535”: Thick Gears) 2000-03	1	XS4Z-7A103-AC
138500B	Pump, 4F27E (Uses A Body With An O-Ring, With .535” Thick Gears) 1999-Up	1	
138500C	Pump, FNR5 (Uses A Body With An O-Ring, With .610” Thick Gears) 2005-Up	1	
138510A	Pump Body With Gears, 4F27E (Uses A Lathe Cut Seal, With .535” Thick Gears) 2000-Up	1	
138510B	Pump Body With Gears, 4F27E (Uses An O-Ring, With .535” Thick Gears) 1999-Up	1	
138510C	Pump Body With Gears, FNR5 (Uses An O-Ring, With .610” Thick Gears) 2005-Up	1	
138520A	Stator, 4F27E (Uses A Body With A Lathe Cut Seal) 2000-Up	1	
138520B	Stator, 4F27E/FNR5 (Uses A Body With An O-Ring) 1999-Up	1	
138550A	Drum, 4F27E Overdrive Clutch (3 Clutch) (32 Teeth Steels) (With 2 Holes In Bottom Of Ring Bore) 1999-Up	1	XS4Z-7F283-AB
138550C	Drum, FNR5 Overdrive Clutch (3 Clutch)(32 Teeth Steels) (With 6 Holes In Bottom Of Ring Bore) 2005-Up	1	
138554A	Drum, 4F27E/FNR5 (Ford) Forward Clutch (With 12 1/8” Shaft) (4 Clutch) (32 Teeth Steels) (.450”OD Pilot On Rear Of Shaft) 1999-Up	1	XS4Z-7F207-AC
138554B	Drum, 4F27E/FNR5 (Mazda) Forward Clutch (With 12 1/8” Shaft) (4 Clutch) (32 Teeth Steels) (.488”OD Pilot On Rear Of Shaft) 1999-Up	1	
138555C	Drum, FNR5 Direct Clutch (2 Clutch)(3.040” Overall Height) 2005-Up	1	
138556A	Drum, 4F27E Reverse Clutch (2 Clutch) (With 2 Check Ball Capsules) (18 Holes) (36 Teeth Steels)(Smooth On The End Where Clutches Slide In)1999-Up	1	XS4Z-7D044-AB
138556C	Drum, FNR5 Reverse Clutch (2 Clutch)(2 Staked In Check Balls)(18 Holes)(36 Teeth Steels) (With 32 Stamped Notches On The End Where Clutches Slide In) 2005-Up	1	
138560A	Piston Kit, 4F27E/FNR5 Overdrive Clutch (Bonded Piston With 20 Spring Retainer) 1999-Up	1	
138561C	Piston Kit, FNR5 Reduction Clutch (Bonded) 2005-Up	1	
138564A	Piston Kit, 4F27E/FNR5 Forward Clutch (2 Bonded Pistons & Spring Retainer) 1999-Up	1	
138565C	PistonKit, FNR5 Direct Clutch 2005-Up	1	

© Whatever It Takes Transmission Parts. Inc.

138566A	Piston Kit, 4F27E (Ford)/FNR5 Reverse Clutch (Bonded Piston With 6 Notches & 12 Finger Spring)(1.475” Thick Piston) 1999-Up	1	
138566B	Piston Kit, 4F27E (Mazda) Reverse Clutch (Bonded Piston) (With 6 Notches & 12 Finger Spring) (1.375” Thick Piston)	1	
138567A	Piston Kit, 4F27E Low & Reverse Clutch (Bonded Piston) (12 Finger Return Spring) (Contains: #967, 977, &865) 1999-Up	1	
138567C	Piston Kit, FNR5 Low/Reverse Clutch (Bonded Piston)(18 Finger Return Spring) (Contains: #967, 977, & 865) 2005-Up	1	
138570A	Hub, 4F27E Overdrive (32 Teeth) (24 Splines) (2.925” Tall) (6 Slots) (1.040”OD Of Shaft) 1999-Up	1	XS4Z-7H351-AB
138570B	Hub, 4F27E Overdrive (32 Teeth) (24 Splines) (2.925” Tall) (No Slots) (1.040”OD Of Shaft) 1999-Up	1	
138570C	Hub, FNR5 Overdrive (32 Teeth) (25 Splines) (2.925” Tall) (No Slots) (1.180”OD Of Shaft) 2005-Up	1	
138574A	Hub, 4F27E/FNR5 Forward Clutch (32 Teeth) (1.705” Tall) 1999-Up	1	XS4Z-7B067-AC
138582A	Planet, 4F27E Front (Steel) (With Three 20 Teeth Gears) (108 Teeth Ring Gear) (34 Splines On Neck)(Neck Is .984” Long) 1999-01	1	XS4Z-7A398-AB
138582AA	Planet, 4F27E/FNR5 Front (Steel) (With Three 20 Teeth Gears) (108 Teeth Ring Gear) (34 Splines On Neck)(Neck Is .938” Long) 2002-Up	1	
138584A	Planet, 4F27E Rear (3 Gear)(Steel) (24 Inner Splines) 1999-Up	1	XS4Z-7D006-AB
138584AA	Planet, FNR5 Rear (3 Gear)(Steel) (25 Inner Splines) 2005-Up	1	
138586C	Planet, FNR5 Reduction (3 Gear)(31 Teeth Sun Gear)(8 1/4” Long Shaft) 2005-Up	1	
138592A	Ring Gear, 4F27E/FNR5 Front (42 Outer Teeth) (12 Lugs) (3.080” Thick) (89 Left Angled Inner Teeth) 1999-Up	1	
138596C	Ring Gear, FNR5 Reduction Planet (12 Lugs) (89 Teeth) (1.415” Thick) 2005-Up	1	
138612A	Sun Gear, 4F27E/FNR5 Front (49 Left Angled Teeth) (3.160” Long) 1999-11/04	1	XS4Z-7A399-AB
138614A	Sun Gear, 4F27E Rear (37 Left Angled Teeth) (32 Lugs) (9 Slots) (1.042”ID Of Bushing)(Uses A Bearing # 138217A) 1999-4/05	1	XS4Z-7A019-AB
138614B	Sun Gear, 4F27E Rear (37 Left Angled Teeth) (32 Lugs) (9 Slots) (1.042”ID Of Bushing)(Uses A Bearing # 138217B) 1999-Up	1	
138614C	Sun Gear, FNR5 Rear (37 Left Angled Teeth) (32 Lugs) (8 Slots) (1.182”ID Of Bushing) 2005-Up	1	
138616C	Sun Gear, FNR5 Reduction Planet (31 Teeth) (1.315” Long) (1.650”OD) 2005-Up	1	

PART #	SPRAGS & ONE WAY CLUTCHES	QTY.	REFERENCE #
138650C	Sprag, FNR5 Reduction (12 Rollers) (.685” Wide) (Plastic Cage With 3 Brass Keepers) 2005-Up	1	
138654A	Sprag, 4F27E/FNR5 Low (20 Elements) (.465” Thick Brass End Caps) 1999-Up	1	XS4Z-7A089-AB
138660C	Inner Race, FNR5 Reduction Sprag (.640” Thick)(14 Inner Splines) 2005-Up	1	
138664A	Inner Race, 4F27E/FNR5 Low Sprag (3.900”OD) (.775” Thick) 1999-Up	1	XS4Z-7D171-AB

PART #	HARD PARTS (Continued)	QTY.	REFERENCE #
138689A	Oil Shield, 4F27E Pinion Bearing To Case (2.389”OD) 1999-Up	1	
138690A	Park Gear, 4F27E (11 Lugs) (36 Splines) 1999-Up	1	
138690C	Park Gear, FNR5 (11 Lugs)(32 Splines) 2005-Up	1	
138694A	Retainer, 4F27E/FNR5 Low Sprag (.028” Thick) (With 4 Legs) (5.080”OD) 1999-Up	1	XS4Z-7H199-AB
138694C	Retainer, FNR5 Reduction Sprag (2.515”OD)(With 3 Legs) 2005-Up	1	
138696	Crush Sleeve, 4F27E/FNR5 Drive Bearings (2.110”OD) 1999-Up	1	XS4Z-7H369-AB
138710A	Gear, 4F27E Drive Transfer (59 Teeth) 1999-Up	1	XS4Z-7F342-AB
138710B	Gear, 4F27E Drive Transfer (87 Teeth) 1999-Up	1	
138710C	Gear, FNR5 Drive Transfer (86 Teeth) 2005-Up	1	
138712A	Gear, 4F27E Driven Transfer (57 Teeth) 1999-Up	1	
138712B	Gear, 4F27E Driven Transfer (83 Teeth) 1999-Up	1	
138712C	Gear, FNR5 Driven Transfer (82 Teeth) 2005-Up	1	
138715A	Differential Assembly, 4F27E (85 Teeth Ring Gear, 1 Groove) (34 Teeth Pick-Up) 1999-Up	1	
138715AA	Differential Assembly, 4F27E (85 Teeth Ring Gear, 1 Groove) (24 Teeth Stamped Steel Pick-Up) (10 Rivets On Ring Gear)	1	
138715AB	Differential Assembly, 4F27E (85 Teeth Ring Gear, 1 Groove) (24 Teeth Cast Iron Pick-Up) (14 Bolt Ring Gear)	1	
138715AC	Differential Assembly, 4F27E (83 Teeth Ring Gear No Groove) (24 Teeth Pick-Up)	1	
138715AE	Differential Assembly, 4F27E (86 Teeth Ring Gear, 2 Groove) (24 Teeth Pick-Up)	1	
138715AF	Differential Assembly, 4F27E (86 Teeth Ring Gear, 3 Groove) (24 Teeth Pick-Up)	1	
138715AH	Differential Assembly, 4F27E (87 Teeth Ring Gear, No Groove)(24 Teeth Pick-Up)	1	
138715AM	Differential Assembly, 4F27E (89 Teeth Ring Gear, 2 Groove) (24 Teeth PIck-Up)	1	
138715C	Differential Assembly, FNR5 (85 Teeth Ring Gear, No Groove) (14 Bolt) (25 Roller Cone Bearings) (24 Teeth Pick-Up) 2005-Up	1	
138715CB	Differential Assembly, FNR5 (85 Teeth Ring Gear, 2 Groove)(14 Bolt)(25 Roller Cone Bearings)(24 Teeth Pick-Up) 2005-Up	1	

© Whatever It Takes Transmission Parts. Inc.

PART #	HARD PARTS (Continued)	QTY.	REFERENCE #
138715CJ	Differential Assembly, FNR5 (88 Teeth Ring Gear, 2 Groove)(14 Bolt)(25 Roller Cone Bearings)(25 Teeth Pick-Up) 2005-Up	1	
138730AA	Pinion, 4F27E (22 Teeth) (1 Groove)	1	
138730AAK	Pinion Assembly, 4F27E (22 Teeth)(1 Groove)(With 57 Teeth Transfer Gear)(Contains: # 274, 730, 690, 712, 281)	1	
138730ABK	Pinion Assembly, 4F27E (22 Teeth)(1 Groove)(With 83 Teeth Transfer Gear)(Contains: # 274, 730, 690, 712, 281)	1	
138730AE	Pinion, 4F27E (21 Teeth)(2 Groove)	1	
138730AEK	Pinion Assembly, 4F27E (21 Teeth, 2 Groove)(4.090” Long Shaft)(With 82 Teeth Transfer Gear)(No ID Splines In Pinion Shaft)(Contains: # 274, 730, 690, 712, 281)	1	
138730AF	Pinion, 4F27E (21 Teeth)(3 Groove)(4.090” Long)	1	
138730AFK	Pinion Assembly, 4F27E (21 Teeth)(3 Groove)(4.090” Long Shaft)(With 83 Teeth Transfer Gear)(No ID Splines In Pinion Shaft)(Contains: # 274, 730, 690, 712, 281)	1	
138730AGK	Pinion Assembly, 4F27E (21 Teeth)(3 Groove)(4.090” Long Shaft)(With 57 Teeth Transfer Gear)(No ID Splines In Pinion Shaft)(Contains: # 274, 730, 690, 712, 281)	1	
138730C	Pinion, FNR5 (21 Teeth)(No Groove) (1.360” Long)(With ID Splines)	1	
138730CK	Pinion Assembly, FNR5 (21 Teeth)(3 Groove)(1.360” Long Shaft)(With 83 Teeth Transfer Gear)(With ID Splines In Pinion Shaft)(Contains: # 274, 730, 690, 712, 281)	1	
138730CAK	Pinion Assembly, FNR5 (21 Teeth)(3 Groove)(4.090” Long Shaft)(With 83 Teeth Transfer Gear)(With ID Splines In Pinion Shaft)(Contains: # 274, 730, 690, 712, 281)	1	
138740A	Valve Body, 4F27E (Ford) (6 Solenoid) (Cast # XS4P-7A101-AC) (Customer Must Use Their Manual Valve)	1	
138740B	Valve Body, 4F27E (FN4A-EL, Mazda) (6 Solenoid) (Cast # FN11)(Customer Must Use Their Manual Valve)	1	
138740C	Valve Body, FNR5 (6 Solenoids) (Cast # FS50) 2005-Up (Customer Must Use Their Manual Valve)	1	
138744C	Auxillary Valve Body, FNR5 (2 Solenoids)(3 Bolts To Case)(Cast # 050726D355) 2005-Up	1	

PART #	VALVE BODY COMPONENTS	QTY.	REFERENCE #
138741-1C	Manual Valve, FNR5 2005-Up	1	
S138741PK	Valve Kit, 4F27E (Oversized Pressure Regulator)(Sonnax)(Contains: Valve & End Plug)(Must Use T-F-46892-TL)	1	
T-F-46892-TL	Tool For S138741PK	1	

PART #	HARD PARTS (Continued)	QTY.	REFERENCE #
138750A	Bell Housing, 4F27E (5 1/4” Top Bolts) (Starter At 11:00) (Cast # RF-XS4P-7976-AD)(15 Bolts To Case) 2000-Up	1	XS4Z-7005-AC
138750AB	Bell Housing, 4F27E (6 1/4” Top Bolts) (Starter At 10:00) (Cast # FN11)	1	
138750AC	Bell Housing, 4F27E (6 3/8” Top Bolts) (Starter At 10:00) (Cast # FN41)	1	
138750AD	Bell Housing, 4F27E (5 1/8” Top Bolts) (Starter At 2:00) (Cast # XS4P-7976-BD) 2004-Up	1	
138750AG	Bell Housing, 4F27E (5 3/8” Top Bolts)(Starter At 3:00)(Cast # FNE1)	1	
138750AH	Bell Housing, 4F27E (5 3/8” Top Bolts)(Starter At 3:00)(Cast # RF-7S4P-7976-AA)	1	
138750AJ	Bell Housing, 4F27E (5 3/8” Top Bolts)(Starter At 3:00)(Cast # RF-3S4P-7976-BA)	1	
138750AK	Bell Housing, 4F27E (4 1/4” Top Bolts)(Starter At 3:00)(Cast # RF-4SAP-7976-AA)	1	
138750C	Bell Housing, FNR5 (5 1/4” Top Bolts) (Starter At 11:00) (Cast # RF-XS4P-7976-AD)(16 Bolts To Case) 2005-Up	1	
138750CA	Bell Housing, FNR5 (5 3/8” Top Bolts)(Square Starter Hole At 2:00)(Cast # FSED) 2005-Up	1	
138750CAA	Bell Housing, FNR5 (5 3/8” Top Bolts)(Square Starter Hole At 2:00)(Cast # FSKO) 2005-Up	1	
138759A	Rear Cover, 4F27E (9 Bolt) (Aluminum) (4 Rings) (No Cooler Line Fittings) (With Babbit Bushing)(Conversion) (Mazda)	1	
138759AA	Rear Cover, 4F27E (9 Bolt Aluminum)(4 Rings)(With 1 Cooler Line Fitting Hole) 1999-Up (Ford)	1	XS4Z-7222-BA
138759C	Rear Cover, FNR5 (9 Bolt Aluminum)(4 Rings)(No Cooler Line Fitting)(With Bronze Bushings) 2005-Up	1	
138760AB	Case, 4F27E (Cast # RFXS-4P By Axle Seal) Ford Type (1 Cooler Line Fitting) 1999-Up	1	
138760B	Case, 4F27E (FN4A-EL) (Mazda Type) (2 Cooler Line Fittings)	1	
138760C	Case, FNR5 (2 Pan Type)(Cast # FS5019421 On Rear Of Case) 2005-Up	1	
138765A	Pan, 4F27E (Shallow & No Drain Plug)(20 Bolts To Case) 1999-Up	1	XS4Z-7A194-AB
138765AA	Pan, 4F27E (Shallow& With Drain Plug)(20 Bolt Holes) 1999-Up	1	
138765C	Pan, FNR5/4F27E (Some) (Deep With Drain Plug & 3 Inside Brackets) (20 Bolts To Case) 2004-Up	1	
138766C	Side Pan, FNR5 (11 Bolt) 2005-Up	1	
138776AK	Bolt Set, 4F27E Bell To Case (15 Pieces) 1999-Up	1	
138776CK	Bolt Set, FNR5 Bell To Case (16 Pieces) 2005-Up	1	
138777AK	Bolt Set, 4F27E/FNR5 Pump To Case (10mm) (7 Pieces) 1999-Up	1	
138778AK	Bolt Set, 4F27E Stator To Body (10mm)(.775” Long)(20 Pieces) 1999-Up	1	
138778CK	Bolt Set, FNR5 Stator To Body (10mm)(.855” Long)(20 Pieces) 2005-Up	1	

© Whatever It Takes Transmission Parts. Inc.

138779AK	Bolt Set, 4F27E Bottom Pan (1.030” Long)(20 Pieces) 1999-Up	1	
138779CK	Bolt Set, FNR5 Bottom Pan (.775” Long)(20 Pieces) 2005-Up	1	
138781AK	Bolt Set, 4F27E Rear Cover To Case (10mm)(1.470”Long)(9 Pieces) 1999-Up	1	
138781CK	Bolt Set, FNR5 Rear Cover To Case (T40 Torx Head)(.985” Long)(9 Pieces) 2005-Up	1	
138782AK	Bolt Set, 4F27E Valve Body To Case (8mm Head) (13 Pieces) 1999-Up	1	
138782CK	Bolt Set, FNR5 Valve Body To Case (10mm Head)(14 Pieces) 2005-Up	1	
138795A	Nut, 4F27E/FNR5 Transfer Drive Gear (1.710”ID) (Right Hand Threads) (4 Notches) 1999-Up	1	XS4Z-7B364-AB
138799A	Bolt, 4F27E External Shift Lever (10mm) 1999-Up	1	
138799C	Bolt, FNR5 Exteranl Shift Lever (21mm) 2005-Up	1	
138855A	Retainer, 4F27E Reverse Clutch (No Tabs)(2.875”OD)(2.500”ID) 1999-Up	1	XS4Z-7D406-AB
138855C	Retainer, FNR5 Reverse Clutch (With 4 Tabs) 2005-Up	1	
138857A	Cushion, 4F27E/FNR5 Low/Reverse Clutch (6 1/8”OD) (.088” Thick) 1999-Up	1	XS4Z-7B070-BB
138862A	Snap Ring, 4F27E/FNR5 Overdrive Clutch Retainer In (.047” Thick) (1.482”OD) 1999-Up	1	XS4Z-7H363-AB
138864C	Snap Ring, FNR5 Holds Reduction Pressure Plate In Case (.055” Thick)(5.360”OD) 2005-Up	1	
138865A	Snap Ring, 4F27E/FNR5 Holds Low/Reverse Spring In (.040” Thick) (3.240”OD) 1999-Up	1	XS4Z-7D483-AB
138865C	Snap Ring, FNR5 Holds REduction Clutch Spring Retainer In Case (.048” Thick)(2.325”OD) 2005-Up	1	
138876AA	Snap Ring, 4F27E/FNR5 Forward Clutch (.047” Thick) (4.925”OD)1999-Up (Also Fits 4F27E/FNR5 Overdrive Clutch #890 1999-Up)	1-2	XS4Z-7D483-CA
138876AB	Snap Ring, 4F27E/FNR5 Forward Clutch (.055” Thick) (4.925”OD)1999-Up (Also Fits 4F27E/FNR5 Overdrive Clutch #890 1999-Up)(Also Fits 4F27E/FNR5 Low Sprag #883 1999-Up)	1-2	XS4Z-7D483-CB
138876AC	Snap Ring, 4F27E/FNR5 Forward Clutch (.063” Thick) (4.925”OD)1999-Up (Also Fits 4F27E/FNR5 Overdrive Clutch #890 1999-Up)	1-2	XS4Z-7D483-CC
138876AD	Snap Ring, 4F27E/FNR5 Forward Clutch (.070” Thick) (4.925”OD)1999-Up (Also Fits 4F27E/FNR5 Overdrive Clutch #890 1999-Up)	1-2	XS4Z-7D483-CD
138876AE	Snap Ring, 4F27E/FNR5 Forward Clutch (.078” Thick) (4.925”OD)1999-Up (Also Fits 4F27E/FNR5 Overdrive Clutch #890 1999-Up)	1-2	XS4Z-7D483-CE
138876AF	Snap Ring, 4F27E/FNR5 Forward Clutch (.086” Thick) (4.925”OD)1999-Up (Also Fits 4F27E/FNR5 Overdrive Clutch #890 1999-Up)	1-2	XS4Z-7D483-CF
138877A	Snap Ring, 4F27E Holds Forward Clutch Retainer In (.039” Thick)(1.050”OD)(Flat) 1999-Up (Can Use 138877C)	1	XS4Z-7H365-AB
138877C	Snap Ring, FNR5 Holds Forward Clutch Retainer In (1.050”OD)(.047”Thick)(Fluted) 2005-Up (Can Use 138877A)	1	
138878C	Snap Ring, FNR5 Holds Direct Clutch Pressure Plate In (.062” Thick)(4.920”OD) 2005-Up	1	
138879C	Snap Ring, FNR5 Holds Direct Clutch Spring Retainer/Piston In (.046” Thick)(1.822”OD) 2005-Up	1	
138883A	Use 138876AB	1	
138884A	Snap Ring, 4F27E/FNR5 Holds Front Sun Gear To Planet (.055” Wire Thickness) 1999-Up	1	XS4Z-7H362-AB
138885AA	Snap Ring, 4F27E/FNR5 Holds Low/Reverse Clutch Pressure Plate In Case (.070” Thick) (6 13/16”OD) 1999-Up	1	XS4Z-7D483-BA
138885AB	Snap Ring, 4F27E/FNR5 Holds Low/Reverse Clutch Pressure Plate In Case (.078” Thick) (6 13/16”OD) 1999-Up	1	XS4Z-7D483-BB
138885AC	Snap Ring, 4F27E/FNR5 Holds Low/Reverse Clutch Pressure Plate In Case (.086” Thick) (6 13/16”OD) 1999-Up	1	XS4Z-7D483-BC
138885AD	Snap Ring, 4F27E/FNR5 Holds Low/Reverse Clutch Pressure Plate In Case (.094” Thick) (6 13/16”OD) 1999-Up	1	XS4Z-7D483-BD
138885AE	Snap Ring, 4F27E/FNR5 Holds Low/Reverse Clutch Pressure Plate In Case (.102” Thick) (6 13/16”OD) 1999-Up	1	XS4Z-7D483-BE
138885AF	Snap Ring, 4F27E/FNR5 Holds Low/Reverse Clutch Pressure Plate In Case (.110” Thick) (6 13/16”OD) 1999-Up	1	XS4Z-7D483-BF
138885AG	Snap Ring, 4F27E/FNR5 Holds Low/Reverse Clutch Pressure Plate In Case (.118” Thick) (6 13/16”OD) 1999-Up	1	XS4Z-7D483-BG
138889A	Snap Ring, 4F27E/FNR5 Holds Rear Planet To Front Ring Gear (.041” Thick) (5.240”OD) 1999-Up	1	XS4Z-7H361-AB
138890A	Use 138876	1	
138892	Snap Ring, 4F27E/FNR5 Holds Rear Sun Gear To Reverse Drum (.055” Thick) (6 “OD) 1999-Up (Also 4F27E/FNR5 Holds Reverse Clutch Pressure Plate In Drum 1999-Up)	1-2	XS4Z-7D483-AA
138892A	Snap Ring, 4F27E/FNR5 Holds Rear Sun Gear To Reverse Drum (.062” Thick) (6 “OD) 1999-Up (Also 4F27E/FNR5 Holds Reverse Clutch Pressure Plate In Drum 1999-Up)	1-2	XS4Z-7D483-AC
138892AA	Snap Ring, 4F27E/FNR5 Holds Rear Sun Gear To Reverse Drum (.071” Thick) (6 “OD) 1999-Up (Also 4F27E/FNR5 Holds Reverse Clutch Pressure Plate In Drum 1999-Up)	1-2	XS4Z-7D483-AE
138893A	Snap Ring, 4F27E/FNR5 Holds Reverse Clutch Retainer In (.040” Thick) (2.544”OD) 1999-Up	1	XS4Z-7H075-AB
138900A	Servo Assembly, 4F27E/FNR5 (Bonded Piston)(3 Bolt Cover) 2000-Up	1	
138905A	Piston, 4F27E Overdrive Servo (Bonded) 1999-Up	1	XS4Z-7D021-AB
138918AF	Bolt, 4F27E Overdrive Band Adjusting (39mm)(#7 On Bolt) 1999-Up	1	
138919	Band Adjustment Pin/Nut, 4F27E/FNR5 Pin & Nut (Superior)	1	
138926A	Spring, 4F27E/FNR5 Accumulator (Front, Outer) (3” Long) 1999-Up	1	XS4Z-7G267-AB
138926AA	Spring, 4F27E/FNR5 Accumulator (Rear, Outer) (2 11/16” Long) 1999-Up	1	XS4Z-7G300-AB

© Whatever It Takes Transmission Parts. Inc.

PART #	HARD PARTS (Continued)	QTY.	REFERENCE #
138926B	Spring, 4F27E Accumulator (Front, Inner) (2 1/8" Long) 1999-Up	1	XS4Z-7G326-AB
138926BA	Spring, 4F27E/FNR5 Accumulator (Rear, Inner) (2 11/16" Long 1999-Up	1	XS4Z-7G395-AA
138926C	Spring, FNR5 Accumulator (Front, Inner) (1 15/16" Long)	1	
138927A	Piston, 4F27E/FNR5 Accumulator 1999-Up	2	XS4Z-7F251-AB
138960A	Piston, 4F27E/FNR5 Overdrive Clutch (Bonded) 1999-Up	1	
138960AK	Piston Set, 4F27E (Ford) (With 7 Bonded Pistons) 2000-Up (The Reverse Clutch Piston Is 1.455" Thick)	1	
138960B	Retainer/Balance Piston, 4F27E/FNR5 Overdrive Clutch (Bonded) 1999-Up	1	
138960BK	Piston Set, 4F27E (Mazda) (With 7 Bonded Pistons) 1999-Up (The Reverse Clutch Piston Is 1.375" Thick)	1	
138960CK	Piston Kit, FNR5 (Bonded) 2005-Up	1	
138960DK	Piston Kit, FS5AEL (Mazda)(Bonded) 2005-Up (9 Pistons)	1	
138961C	Piston, FNR5 Reduction Clutch (Bonded)(.850" Thick)(4.310"OD) 2005-Up	1	
138964A	Piston, 4F27E/FNR5 Forward Clutch (Bonded) 1999-Up	1	
138964B	Retainer/Balance Piston, 4F27E/FNR5 Forward Clutch (Bonded) 1999-Up	1	
138965C	Piston, FNR5 Direct Clutch (Bonded) (.650" Thick)(4.490"OD)(2.200"ID) 2005-Up	1	
138966A	Piston, 4F27E(Ford)/FNR5 Reverse Clutch (Bonded)(1.455" Thick) 1999-Up	1	
138966B	Piston, 4F27E (Mazda FN4A-EL) Reverse Clutch (Bonded) (1.375" Thick) 1999-Up	1	
138967A	Piston, 4F27E/FNR5 Low/Reverse Clutch (Bonded) 1999-Up	1	
138971C	Spring/Retainer, FNR5 Reduction Clutch Return (.775" Thick)(3.425"OD)(2.213"ID)(24 Springs) 2005-Up	1	
138975C	Spring, FNR5 Direct Clutch Return (20 Springs) 2005-Up	1	
138976A	Spring, 4F27E/FNR5 Reverse Clutch Return (Beveled) (With 12 Fingers) (.055" Thick) (4.785") 1999-Up	1	
138977A	Spring, 4F27E Low & Reverse Clutch Return (Beveled) (12 Fingers) (.050" Thick) 1999-Up	1	XS4Z-7B070-AB
138977C	Spring, FNR5 Low/Reverse Clutch Return (Beveled)(18 Fingers)(.050" Thick) 2005-Up	1	
138985C	Retainer/Piston, FNR5 Direct Clutch Spring (Bonded)(.850" Thick)(3.690"OD)(1.743"ID) 2005-Up	1	
138991A-3	Detent Assembly, 4F27E (With Rooster Comb)(With .150"ID Roll Pin Hole) 1999-Up	1	
138991A-4	Shift Rod, 4F27E Linkage (11 5/8" Long) 1999-Up	1	
138991A-6	Bracket, 4F27E Actuator (2 Bolt) 1999-Up	1	
138991C-3	Detent Assembly, FNR5 With Rooster Comb (With .110"ID Roll Pin Hole) 2005-Up	1	
138991C-4	Shift Rod, FNR5 Linkage (12 1/4" Long) 2005-Up	1	
138991C-6	Bracket, FNR5 Actuator (2 Bolt)	1	
138992A	Shift Lever, 4F27E External (3/8" Wide Slot For Shaft)(Uses A 10mm Bolt To Hold Lever To Shaft) 1999-Up	1	XS4Z-7A256-AA
138992C	Shift Lever, FNR5 External (5/16" Wide Slot For Shaft)(Uses A 21mm Nut To Hold Lever To Shaft) 2005-Up	1	
138994A	Park Rod Actuator, 4F27E/FNR5 (6 1/4" Long) 1999-Up	1	XS4Z-7A232-AB
138995A	Park Pawl Assembly, 4F27E/FNR5 (3 Pieces) 1999-Up	1	
138996A	Cooler Fitting, 4F27E (19mm) (Screen-In) (With Female Fitting On Cooler Line Side) 1999-Up	2	YS4Z-7D273-AA
138996C	Cooler Fitting, FNR5 (19mm) (With Male Slip-On Fitting On Cooler Line Side) 2005-Up	2	
138999A	Tube, 4F27E Inside Case (4" Long) 1999-Up	1	YS4Z-7N148-AB
138999C	Tube Set, FNR5 Inside Case (2 Tubes) 2005-Up	1	

© Whatever It Takes Transmission Parts. Inc.

TOLEDO TRANS-KIT®

If you want the best transmission sealing kit in the industry, ask for Toledo TransKit® by name.

Engineered utilizing best-in-class materials, TTK kits are recognized among the highest quality and most comprehensive kits available to transmission professionals.

- More critical components
- More OE components
- More premium seals and gaskets
- Design enhancements and OE improvements
- Patented components
- Plus all the little extras you won't find elsewhere



Seal Aftermarket Products portfolio:

SEAL AFTERMARKET PRODUCTS · TOLEDO TRANS-KIT · VOLT Electronics · THE BEAST · Hi-Per Blue · TKMAXX

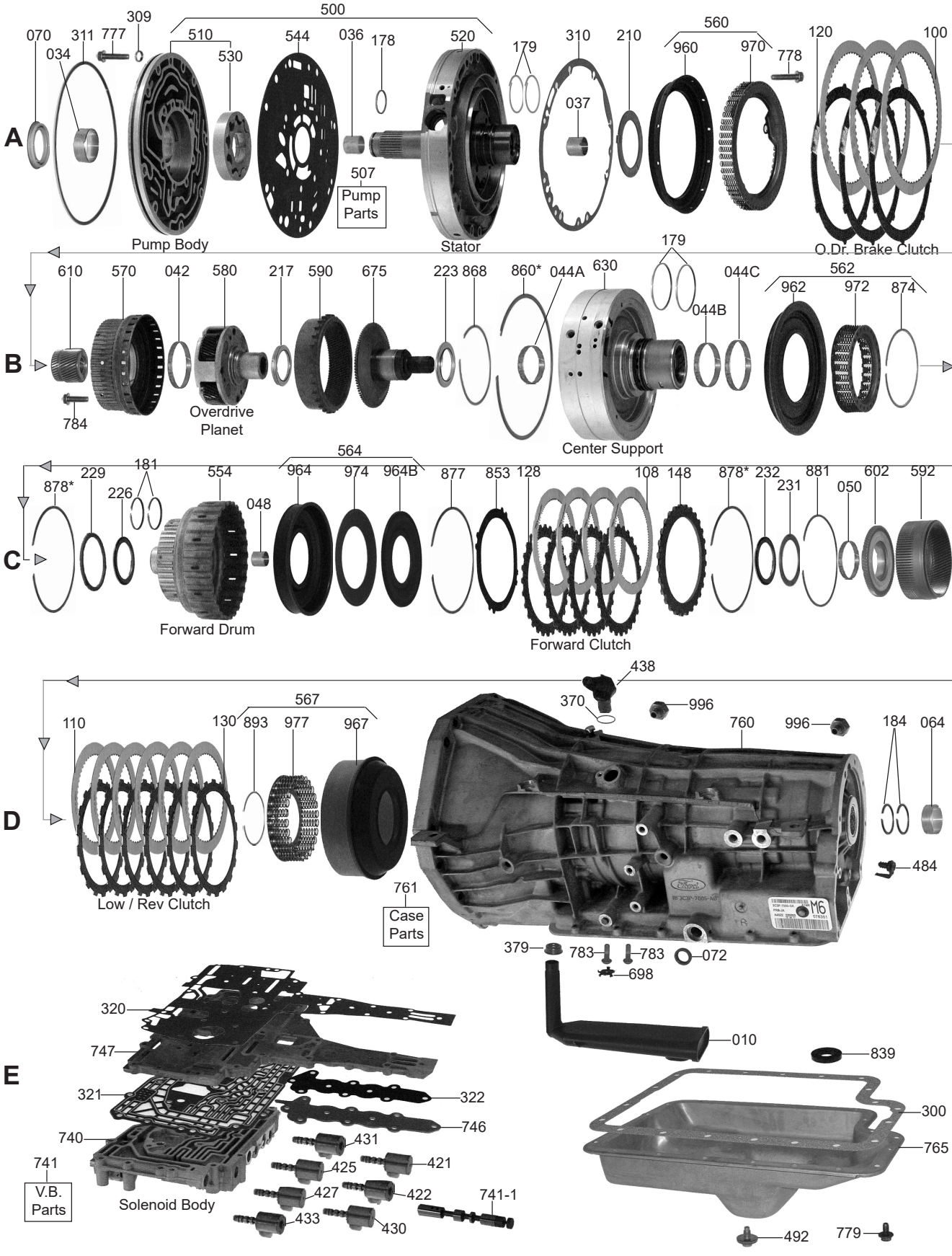

002 Overhaul Kit

004 Master L/Steels Kit

006 Master W/Steels Kit

030 Bushing Kits

119 FrictionModule

175 Ring Kit

200 Washer Kit

FORD

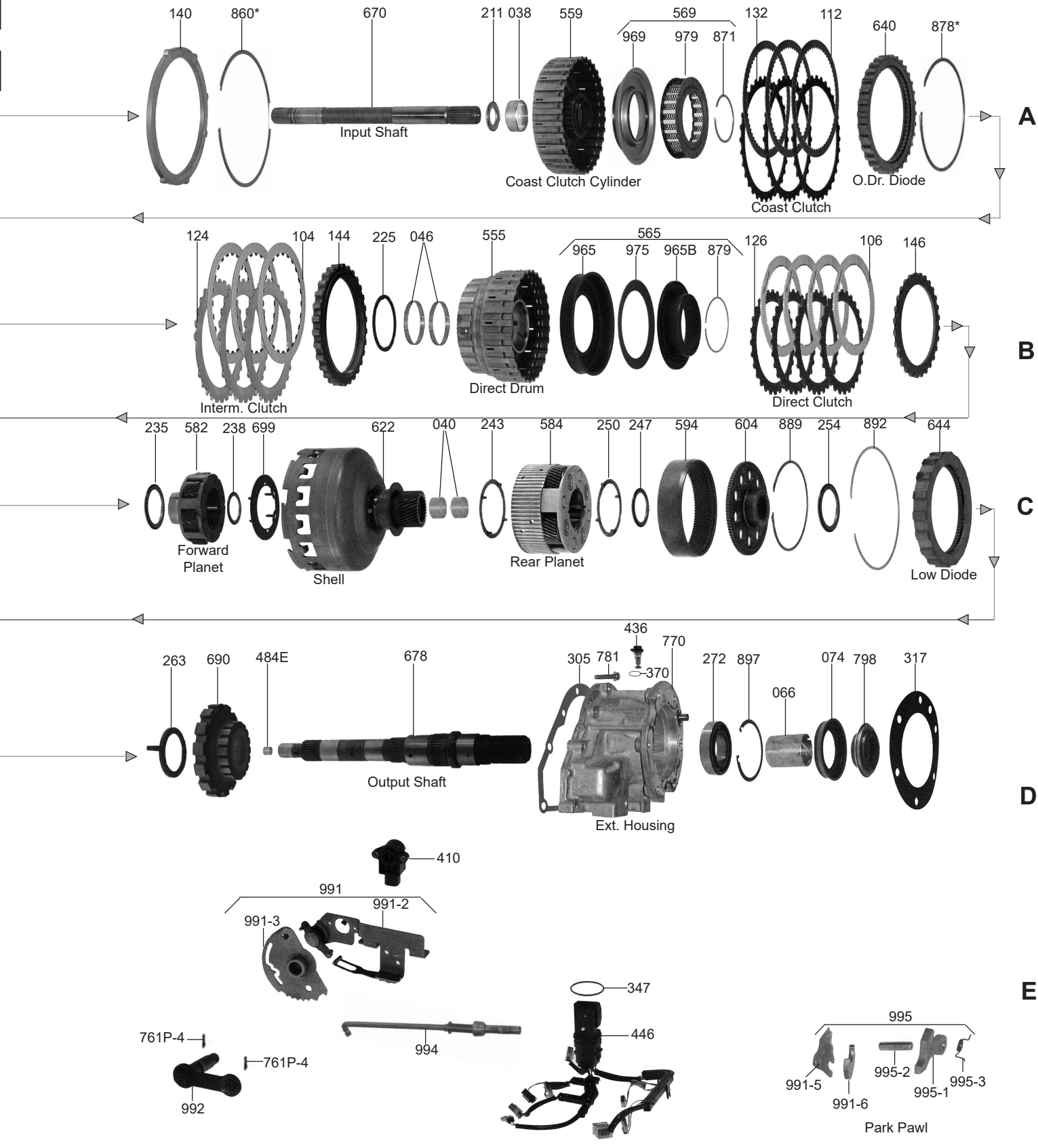

FORD

© Whatever It Takes Transmission Parts. Inc.

PART #	PAPER & RUBBER KIT	QTY	REFERENCE #
136002A	Overhaul Kit, 5R110W 2003-Up (For Bonded Pistons Sell A136960AK)(4x4 Adapter Housing Seal Not Included, Sell 136074A Separately)	1	
136002AP	Overhaul Kit, 5R110W (Torqshift) 2003-Up (For Bonded Pistons Sell (A136960AK) (TTK MAXX)	1	

PART #	MASTER L/STEELS KIT	QTY	REFERENCE #
136004A	Master L/Steels Kit, 5R110W (Torqshift) 2003-04 (4x4 Adapter Housing Seal Not Included) (Sell 136074A Seperately)	1	
136004AP	Master L/Steels Kit, 5R110W (Torqshift) W/Bonded Pistons 2003-04 (4x4 Adapter Housing Seal Not Included)(Sell 136074A Seperately)	1	
136004AA	Master L/Steels Kit, 5R110W (Torqshift) 2005-Up (4x4 Adapter Housing Seal Not Included) (Sell 136074A Seperately)	1	
136004AAP	Master L/Steels Kit, 5R110W (Torqshift) W/Bonded Pistons 2005-Up (4x4 Adapter Housing Seal Not Included)(Sell 136074A Seperately)	1	

PART #	MASTER W/STEELS KIT	QTY	REFERENCE #
136006A	Master W/Steels Kit, 5R110W (Torqshift) 2003-04 (4x4 Adapter Housing Seal Not Included) (Sell 136074A Seperately)	1	
136006AP	Master W/Steels Kit, 5R110W (Torqshift) W/Bonded Pistons 2003-04 (4x4 Adapter Housing Seal Not Included)(Sell 136074A Seperately)	1	
136006AA	Master W/Steels Kit, 5R110W (Torqshift) 2005-16 (4x4 Adapter Housing Seal Not Included) (Sell 136074A Seperately)	1	
136006AAH	Master W/Steels, 5R110W w/GPZ Friction 2005-16 (4x4 Adapter Housing Seal Not Included,Sell 136074A Separately)(For Bonded Pistons Sell A136960AK)	1	
136006AAHHP	Master W/Steels Kit, 5R110W w/GPZ & TTKXX Overhaul Kit 2005-16 (4x4 Adapter Not Included, Sell 136074A Separately)(For Bonded Pistons Order A136960AK Seperately)	1	
136006AAP	Master W/Steels Kit, 5R110W (Torqshift) W/Bonded Pistons 2005-16 (4x4 Adapter Housing Seal Not Included)(Sell 136074A Seperately)	1	

PART #	FILTERS	QTY	REFERENCE #
136010A	Filter, 5R110W 2003-07 (3 5/8" Wide At The Widest End)(SPX)	1	3C3Z-7A098-AA
136010B	Filter, 5R110W 2008-Up (4 3/8" Wide)	1	
136013A	Cartridge Filter, 5R110W ("The Trap")(External) 2003-Up	1	
136013AK	Filter, 5R110W By-Pass (Element) With O-Ring (OE) 2003-Up	1	
136013B	Filter, 5R110W Inline (Metal) (Uses 2 Inlet Lines & 2 Outlet Lines) 2007-Up	1	

PART #	BUSHINGS	QTY	REFERENCE #
136030A	Bushing Kit, 5R110W 2003-Up (16 Bushings)	1	
76034	Bushing, 5R110W Pump (Bronze) (.702" Tall) 2003-Up (Can Use 36034EB)	1	
36034EB	Bushing, 5R110W Pump Body (Bronze) (.702" Tall) 2003-Up (Can Use 76034)	1	
36036	Bushing, 5R110W Stator (Front)	1	C6AZ-7B261-C
36037	Bushing, 5R110W Stator (Rear)	1	C6AZ-7D018-A
136038A	Bushing, 5R110W Coast Clutch Drum (Babbitt) 2003-Up	1	
136040A	Bushing, 5R110W Shell W/Sun Gear (Takes 2) 2003-Up (Use 36040)	2	
36040	Bushing, 5R110W Shell W/Sun Gear (Takes 2) 2003-Up	2	
136042A	Bushing, 5R110W Coast Clutch Hub (.415" Wide) (3.0" ID) 2003-Up	1	
136044A	Bushing, 5R110W Center Support (Front) (1.840"ID) 2003-Up	1	
136044B	Bushing, 5R110W Center Support (Center) (1.735"ID) 2003-Up	1	
136044C	Bushing, 5R110W Center Support (Rear) (1.985"ID) 2003-Up	1	
136046A	Bushing, 5R110W Direct Drum (Front & Rear) 2003-Up	2	
136046AA	Bushing, 5R110W Direct Drum (Front & Rear)(1 Piece Design) 2003-Up	1	
136046AB	Bushing, 5R110W (Torqshift) Direct Drum (Bronze) 2003-Up	1	
136046AK	Bushing KIt, 5R110W Direct Drum (Internal Upgrade)(Superior) (Includes #046, #179, #181, #878, #892, & An End Play Shim)	1	
136048A	Bushing, 5R110W Forward Drum (.905"ID) 2003-Up	1	
136050A	Bushing, 5R110W Forward Hub (2.038"ID) 2003-05	1	
136050C	Bushing, 5R110W Forward Hub (1.908"ID) 2005-Up	1	
136064A	Bushing, 5R110W Case (1.740"ID) With Oil Pockets 2003-Up	1	
136066A	Bushing, 5R110W 2WD Extension Housing (1.200" Long)(2.090"ID) 2003-Up	1	

PART #	METAL CLAD SEALS	QTY	REFERENCE #
76070C	Seal, 5R110W Front With Flange (Gray Casing W/Brown Viton)(Rubber) 2003-Up	1	E9TZ-7A248-B
36072	Seal, 5R110W Linkage Shaft 2003-Up	1	D5AZ-7B498-A

© Whatever It Takes Transmission Parts. Inc.

136074A .....Seal, 5R110W Extention Housing (4x4) (Cast #3C3P-7052-BB) 2003-Up (With Flange)
.....(3.575"OD)(2.386"ID).....1 .....3C3Z-7052-BA
136074B .....Seal, 5R110W Extension Housing (2WD) (3.180"OD) 2003-Up .....1 .....

PART #	FRICTION CLUTCH	QTY	REFERENCE #

136100A .....Friction, 5R110W Overdrive Brake Clutch (.078") 32 Teeth (Smooth) 2003-Up (Also Fits
.....4R100 Overdrive Clutch 1998-Up).....3 .....3C3Z-7B164-AA
136100AH.....Friction, 5R110W Overdrive Brake Clutch (GPZ)(.078")(32 Teeth)(Smooth) 2003-Up .....3 .....
136100AHD ....Friction, 5R110W Overdrive Brake Clutch (.078")(32 Teeth)(Heavy Duty)(Smooth) 2003-10.....3 .....
136104A .....Friction, 5R110W Intermediate Clutch (.078") 24 Teeth (Star Burst) 2003-04.....3 .....3C3Z-7B164-EA
136104AA.....Friction, 5R110W Intermediate Clutch (.078") 96 Teeth 2005-Up .....4 .....5C3Z-7B164-AA
136104AAH .....Friction, 5R110W Intermediate Clutch (GPZ)(.078")(96 Teeth) 2005-Up (Heavy Duty) .....3.....
136106AHPPK ..Friction/Steel Kit, 5R110W Direct Clutch With Modified Piston 2003-Up (Hi Performance)
.....(Powerpack)(Includes: Six - Red Eagle Frictions, Six - Kolene Steel Plates, One - .062" Snap
.....Ring & One - Modified Direct Clutch Piston).....1 .....
136106A .....Friction, 5R110W Direct Clutch (.078") 48 Teeth (Smooth W/32 Grooves) 2003-Up .....4 .....3C3Z-7B164-DA
136106AHD ....Friction, 5R110W Direct Clutch (.078")(48 Teeth)(Heavy Duty)(Radial Groove) 2003-10.....4 .....
136108A .....Friction, 5R110W Forward Clutch (.078") 90 Teeth (Smooth W/32 Grooves) 2003-04.....4 .....3C3Z-7B164-BA
136108AHPPK..Friction/Steel Kit, 5R110W Forward Clutch 2003-04 (Hi Performance)(Powerpack)
.....(Includes: Five - Red Eagle Frictions, Four - Kolene Steel Plates & One - Kolene Clearance
.....Steel).....1 .....
136108AA.....Friction, 5R110W Forward Clutch (.078") 76 Teeth 2005-Up .....4 .....5C3Z-7B164-BA
136108AAH ....Friction, 5R110W Forward Clutch (GPZ)(Heavy Duty) 2005-Up (.078")(76 Teeth)(6.385"OD).....1 .....
136108AAHPPKFriction/Steel Kit, 5R110W Forward Clutch 2005-Up (Hi Performance)(Powerpack)
.....(Includes: Five - Red Eagle Frictions & Five - Kolene Steel Plates).....1 .....
136110-1AK....Friction/Steel Kit 5R110W Reverse Clutch (6 Frictions & 6 Steel Plates)(Frictions & Steels
.....Have 4 Half Moon Cuts On The ID To Fit Over The Planet Pinion Gears).....1 .....
36110 .....Friction, 5R110W Low/Reverse Clutch (.078")(72 Teeth) 2003-Up .....6 .....
136112A.....Friction, 5R110W Coast Clutch (.078") 59 Teeth (Starburst) 2003-Up .....3 .....3C3Z-7B164-FA
136112AS1 .....Friction, 5R110W Coast Clutch (.078")(59 Teeth)(Starburst)(Stage 1) 2003-Up.....3 .....
136119A.....Friction Module, 5R110W 2003-04.....1 .....
136119AA .....Friction Module, 5R110W 2005-Up .....1 .....
136119AAH ....Friction Module, 5R110W 2005-Up (GPZ) .....1 .....
136119AS1 .....Friction Module, 5R110W (Stage 1) 2003-04 .....1 .....
136119AAS1...Friction Module, 5R110W (Stage 1) 2005-Up .....1 .....

PART #	STEEL CLUTCH	QTY	REFERENCE #

136120A .....Steel, 5R110W Overdrive Brake (.079") 6 Teeth 2003-Up (Has 1 Wide Tooth) .....2 .....3C3Z-7B442-AA
136124A .....Steel, 5R110W Intermediate Clutch (.125")(26 Teeth)(6 7/16"ID) 2003-04.....3 .....
136124AA.....Steel, 5R110W Intermediate Clutch (.116")(26 Teeth)(6 7/16"ID) 2005-Up.....3 .....5C3Z-7B442-AA
36145.....Steel, 5R110W Intermediate Clutch (.124") 2003-Up.....3 .....E9TZ-7B066-C
136126A .....Steel, 5R110W Direct Clutch (.079") (28 Teeth) (5.129"ID) 2003-1/05 (Also Fits 5R110W
.....Forward Clutch 2003-04) .....4-8.....3C3Z-7B442-CA
136126ABHP..Steel, 5R110W Direct Clutch (.059")(28 Teeth)(5.129"ID)(Kolene)(Also Fits 5R110 Forward
.....Clutch #128).....4-8.....
136128A .....Use 136126A.....4 .....
136128AA.....Steel, 5R110W Forward Clutch (.079") 20/28 Teeth (5.380"ID) 2005-Up.....4 .....5C3Z-7B442-BA
136128AAHP..Steel, 5R110W Forward Clutch (.079") 20 Teeth (5.380"ID) 2005-Up (Has 20 Teeth With
.....8 Missing)(Works In Place Of The 28 Tooth)(Kolene).....1 .....
136128BHP ....Steel, 5R110W Forward Clutch (.067") 20 Teeth (5.380"ID)(Kolene) 2005-10 (Powerpack Part)...1 .....
36130.....Steel, 5R110W Low/Reverse Clutch (.068") 2003-Up.....6 .....E9TZ-7B442-E
36130A .....Steel, 5R110W Low/Reverse Clutch (.068")(Kolene) 2003-Up .....6 .....
136132A .....Steel, 5R110W Coast Clutch (.079") 32 Teeth (Notched Teeth) 2003-Up (Takes 3)
.....Can Use 36132E, But These Are Not Notched Teeth .....3 .....3C3Z-7B442-EA
136132AHP ....Steel, 5R110W Coast Clutch (.079")(32 Teeth)(Notched Teeth) 2003-10 (Kolene).....1 .....
136137AAHP..Friction/Steel Module, 5R110W 2005-Up (With Forward & Direct Powerpacks).....1 .....
136137ABHP..Friction/Steel Module, 5R110W 2003-04 (With Forward & Direct Powerpacks) .....1 .....
136139A .....Steel Module, 5R110W 2005-Up.....1 .....

PART #	CLUTCH PRESSURE PLATES	QTY	REFERENCE #

36140A .....Pressure Plate, 5R110W Overdrive Clutch (.320")(6 Teeth) 2003-04 .....1 .....F3TZ-7B066-A
136140AA.....Pressure Plate, 5R110W Overdrive Brake Clutch (.318" Thick At Edge)(Stepped)(5 Small Teeth
.....And 2 Wide Teeth) 2005-Up.....1 .....
136144A .....Pressure Plate, 5R110W Interm Clutch (.675" Thick) 30 Teeth (Stepped) 2003-04.....1 .....3C3Z-7B066-BA
136144B .....Pressure Plate, 5R110W Intermediate Clutch (.523" Thick) 29 Teeth (With 3 Humps) 2005-Up
.....(Has 1 Tooth Missing).....1 .....5C3Z-7B066-BA

© Whatever It Takes Transmission Parts. Inc.

PART #	CLUTCH PRESSURE PLATES (Continued)	QTY	REFERENCE #
136144BD	Pressure Plate, 5R110W Intermediate Clutch (.355")(29 Teeth)(With 3 Humps) 2005-Up (Has One Tooth Missing)	1	
36145	Pressure Plate, 5R110W (Intermediate Steel #124) 2003-04	3	E9TZ-7B066-C
136146	Pressure Plate, 5R110W Direct Clutch (.138"Thick) (25 Teeth Or 28 Teeth)(5.129"ID) 2003-Up (Also Fits 5R110W Forward Clutch 2003-04)	1	
136146A	Pressure Plate, 5R110W Direct Clutch (.204" Thick) (25 Teeth Or 28 Teeth)(5.129"ID) 2003-Up (Also Fits 5R110W Forward Clutch 2003-04)	1-2	3C3Z-7B066-AA
136146B	Pressure Plate, 5R110W Direct Clutch (.292" Thick) (25 Teeth Or 28 Teeth)(5.129"ID) 2003-Up (Also Fits 5R110W Forward Clutch 2003-04)	1-2	
136148A	Pressure Plate, 5R110W Forward Clutch (.204" Thick)(28 Teeth)(5.380"ID) 2005-Up	1	

PART #	SHIFT KITS	QTY	REFERENCE #
T136165A	Shift Kit, 5R110W (Gas & Diesel) 2003-10 (Transgo)	1	5R110W
T136165AA	Shift Kit, 5R110W (Gas & Diesel) 2003-10 (Transgo)(Includes New Design Steel Pressure Regulator Valve)	1	
T136169A	Reprogramming Kit, 5R110W Heavy Duty & Hi-Performance 2003-07 (Transgo)	1	

PART #	OIL SEALING RINGS	QTY	REFERENCE #
136175AT	Ring Kit, 5R110W (Teflon) 2003-Up	1	
36178AT	Ring, 5R110W Stator (Front) (Teflon)	1	
136179AT	Ring, 5R110W Coast Clutch (Teflon) 2003-Up	2	3C3Z-7D025-AA
136179BT	Ring, 5R110W Direct Clutch (.100" Wide) (Vespel) 2003-Up	1	
136181A	Ring, 5R110W Forward Clutch (Vespel) 2003-Up (Use 74179BT)	2	3C3Z-7D019-BA
74179BT	Ring, 5R110W Forward Clutch (#181) (Solid)(Teflon)	2	
136184A	Ring, 5R110W Case To Output Shaft (Teflon) 2003-Up	2	3C3Z-7D019-AB

PART #	WASHERS & BEARINGS	QTY	REFERENCE #
136200A	Washer Kit, 5R110W 2003-Up	1	
136201A	Bearing Kit, 5R110W 2003-Up	1	
36210GA	Washer, 5R110W Stator (.055" Thick) (Plastic) 2003-Up	1	F1TZ-7D014-A
36211	Bearing, 5R110W Stator To Overdrive Sun Gear 2003-Up	1	3L3Z-7C096-BA
36217	Bearing W/Races, 5R110W Overdrive Planet To Hub 2003-Up	1	E6DZ-7F240-A
136223A	Use 36254C	1	
36254C	Bearing W/Races, 5R110W Overdrive Hub To Center Support 2003-Up	1	E6DZ-7G178-A
136225AD	Washer, 5R110W Center Support (Rear) .177" (#4) 2003-Up (Plastic) 2 Tab	1	3C3Z-7L326-AA
136226A	Bearing W/Races, 5R110W Center Support To Forward Drum 2003-Up (.140" Thick) (2.740"OD)	1	3C3Z-7C096-BA
136229A	Washer, 5R110W Direct Drum To Forward Drum (3 Slots) 2003-Up (Plastic) (.138" Thick)	1	3C3Z-7F374-AA
36231	Washer, 5R110W Forward Drum To Hub (2.865"OD With 3 Half Round Tabs) 2003-04 (For Small Planet)	1	C9AZ-7D090-A
136231C	Washer, 5R110W Forward Drum To Hub (Plastic) (3.030"OD) (With 3 Round Tabs That Snap Onto The Hub # 602) 2005-Up (For Large Planet)	1	
136232A	Bearing W/Races, 5R110W Forward Drum To Hub 2003-Up (.215" Thick) (2.100"OD) Also Fits 5R110W Forward Planet To Sun Gear #238 & Sun Gear To Rear Hub #247	1-3	3C3Z-7D234-AA
36235CA	Bearing W/Races, 5R110W Forward Hub To Forward Planet 2003-04 (.157" Thick)(3.385"OD)	1	F81Z-7A166-AA
136235C	Bearing W/Races, 5R110W Forward Hub To Forward Planet 2005-Up (.174" Thick) (2.865"OD)	1	5C3Z-7A166-AA
136238A	Use 136232A	1	
136243A	Washer, 5R110W Shell W/Sun Gear To Rear Planet 2003-08 (Plastic) 4 Tab (Also Fits 5R110W Rear Planet To Rear Hub)	1-2	3C3Z-7A166-CA
136247A	Use 136232A	1	
136250A	Use 136243A	1	
136254A	Bearing W/Races, 5R110W Rear Ring Gear Hub To Case (3 Tabs) .145" Thick (2.508"OD) 2003-Up	1	3C3Z-7G178-AA
36254C	Bearing W/Races, 5R110W Overdrive Hub To Center Support (#223) 2003-Up	1	E6DZ-7G178-A
136263A	Washer, 5R110W Case To Park Gear (Plastic) (1 Tab) 2003-Up	1	3C3Z-7B368-CA
136272A	Ball Bearing, 5R110W Extention Housing To Output Shaft (2WD & 4x4) 2003-Up (10 Balls, .747" Thick, 1.770"OD, 3.348"OD)	1	

PART #	GASKETS & RUBBER COMPONENTS	QTY	REFERENCE #
36300EW	Gasket, 5R110W Bottom Pan (Bonded Rubber) 2003-Up	1	F6TZ-7A191-A
136305A	Gasket, 5R110W Extention Housing To Case (Paper/Metal) 2003-Up	1	3C3Z-7086-AA
36309E	Gasket, 5R110W Pump Bolt Washer 2003-Up	9	E9TZ-7G379-AA
136310A	Gasket, 5R110W Pump To Case 2003-Up	1	3C3Z-7A136-AA

FORD

© Whatever It Takes Transmission Parts. Inc.

36311E	O-Ring, 5R110W Pump 2003-Up	1	E9TZ-7A248-A
36319E	Gasket, 5R110W PTO Cover 2003-Up	1	
136320A	Gasket, 5R110W Valve Body Plate To Case (Upper) 2003-06 (When Out Use 136320AA)	1	
136320AA	Gasket, 5R110W Valve Body Plate To Case (Upper) 2007-Up (Updated, Retro Fits 2003-Up)	1	
136321A	Gasket/Screen, 5R110W Solenoid Body To Seperator Plate (With Bonded Rubber)	1	
136347A	O-Ring, 5R110W Case Connector 2003-Up	1	3C3Z-7Z276-AA
136370A	O-Ring, 5R110W Input Sensor (1.00"OD) 2003-Up	1	3C3Z-7Z101-AA
136370B	O-Ring, 5R110W Output Speed Sensor (5/8"OD) 2003-Up	1	
36378E	O-Ring, 5R110W Cooler Line Fitting (Large)	1	
36378EA	O-Ring, 5R110W Cooler Line (Small)	1	

PART #	TECHNICAL MANUALS	QTY	REFERENCE#
136400A	Technical Manual, 5R110W (Torqshift)	1	

PART #	ELECTRICAL COMPONENTS	QTY	REFERENCE #
136410A	Sensor, 5R110W (Trans Range Position) 2003-Up	1	
136411A	Switch, 5R110W Fluid Pressure 2003-Up (Takes 5 Per Transmission)	5	
136421A	Use 136425A	1	
136422A	Solenoid, 5R110W Direct Clutch (SSPC-D)(Stamped AB On Shaft Side) 2003-Up (Also Fits 5R110W Coast Clutch SSPC-A)	1-2	3C3Z-7J136-AA
136425A	Solenoid, 5R110W TCC (Stamped BB On Shaft Side) 2003-Up (Also Fits Intermediate Clutch SSPC-C, Overdrive Clutch SSPC-B & Low/Reverse Clutch SSPC-E)	1-4	3C3Z-7J136-BA
136427A	Use 136425A	1	
136430A	Use 136425A	1	
136431A	Solenoid, 5R110W EPC (Line Pressure PC-A) (Stamped AA On Shaft Side) 2003-Up	1	4C3Z-7G383-AA
136433A	Use 136422A	1	
136436A	Sensor, 5R110W Output Shaft Speed 2003-Up	1	3C3Z-7H103-AA
136437A	Sensor, 5R110W Oil Temperature 2003-Up	1	3C3Z-7H141-AA
136438A	Sensor, 5R110W Input Shaft Speed 2003-04	1	3C3Z-7M101-AA
136438B	Sensor, 5R110W Input Shaft Speed 2004-Up (Cast # 3C3P-7M101-AB)	1	
136446A	Wire Harness, 5R110W (Internal) With Connector 2003-Up (Updated, Has 9 Connectors) (Replaces The 13 Connector)	1	4C3Z-7G276-AA
F85Z-2L373AB	Speed Sensor, Rear Axle Housing (Output Speed) 1990-97 Aerostar, 1990 Bronco II, 1990-06 E-150/250/350, 1990-03 F-150, 1991-01 Expedition/Mountaineer, 1990-99 F250, 1999-04 SD F250-F450, 2000-06 Excursion, 1990-03 Ranger, 2000-01 Sporttrac, 1997-02 Expedition	1	

PART #	MISCELLANEOUS COMPONENTS	QTY	REFERENCE #
36484E	Orifice Cup Plug, 5R110W Output Shaft (Front)	1	39150-S
36484G	Lube Oriffice Plug, 5R110W In Rear Of Case 2003-Up	1	F81Z-7E380-AA

PART #	HARD PARTS	QTY	REFERENCE #
136500A	Pump, 5R110W (Less Valves)(Body Cast # 3C3P-7A105-AD)(Stator Cast # 3C3P-78324-AA) 2003-04 (With S136507PAK Installed)	1	
136500B	Pump, 5R110W (Less Valves)(Body Cast # 5C3P-7A105-AA)(Stator Cast # 5C3P-78324-AA) 2005-Up (With S136507PAK Installed)	1	
136510A	Pump Body W/Gears, 5R110W (Cast #3C3P-7A105-AD) 2003-04	1	
136510B	Pump Body W/Gears, 5R110W (Cast # 5C3P-7A105-AA) 2005-Up	1	
136520A	Stator, 5R110W (Less Valve) (Cast # RF3C3P-78324-AA) 2003-04	1	
136520B	Stator, 5R110W (Less Valve) (Cast # RF5C3P-78324-AA) 2005-Up	1	

PART #	PUMP COMPONENTS	QTY	REFERENCE #
A136507B-6	Vent Relocator Kit, 5R110W 2003-Up (Transgo)	1	
S136507CAK	Sleeve & Plunger, 5R110W TCC Control Valve 2003-Up (Sonnax)	1	
S136507FAK	Valve Kit, 5R110W Converter Pressure Limit Valve (Contains: Valve, Sleeve, Spring, 2 Plugs & T-Clip) 2005-Up (Sonnax)	1	
S136507PAK	Pressure Regulator Valve Kit, 5R110W Oversize (Contains: Oversize Pressure Regulator Valve, Spring, & Spring Sleeve)(Sonnax) (Must Use T-F-36740-TL3)	1	
T-F-36940-TL3	Reamer Set, For S136507PAK (Reamer, Guide Pin & Reamer Jig) (Sonnax)	1	
136530A	Pump Gear Set, 5R110W (9 Inner Teeth) (.729" Thick) 2003-Up	1	
136544A	Pump Plate, 5R110W (Fits Body W/Cast # 3C3P-7A105-AD) 2003-04	1	
136544B	Pump Plate, 5R110W (Fits Body W/Cast # 5C3P-7A105-AA) 2005-Up	1	

© Whatever It Takes Transmission Parts. Inc.

PART #	HARD PARTS (Continued)	QTY	REFERENCE #
136554A	Drum, 5R110W Forward Clutch (4 Clutch) (Uses 28 Teeth Steels) 2003-04	1	3C3Z-7A360-SA
136554C	Drum, 5R110W Forward Clutch (4 Clutch) (Uses 28 Teeth Steels) 2005-06	1	
136555A	Drum, 5R110W Direct Clutch (4 Clutch) (3.700" Tall) 2003-04 (Uses 28 Teeth Steels) (With 24 Teeth Intermediate Clutch Hub)	1	3C3Z-7F283-AA
136555AA	Drum, 5R110W Direct Clutch (4 Clutch) (3.700" Tall) 2005-Up (Uses 28 Teeth Steels) (With 88 Teeth Intermediate Clutch Hub)	1	5C3Z-7F283-AA
136559A	Drum, 5R110W Coast Clutch (Stamped Steel)(3 Clutch)(Uses 136640A That Is .625" Thick) 2003-04	1	3C3Z-7G387-AA
136559AA	Drum, 5R110W Coast Clutch (Stamped Steel)(3 Clutch)(Uses 136640B That Is .663" Thick) 2005-Up	1	
136559B	Drum, 5R110W Coast Clutch (Stamped Steel)(3 Clutch)(41 Teeth Sun Gear)(Uses A 136640B That Is 0.663" Thick)(For A 5 Gear Planet) 2008-Up	1	
136560A	Piston Kit, 5R110W Overdrive Brake Clutch (Bonded) 2003-Up	1	
136562A	Piston Kit, 5R110W Intermediate Clutch (Bonded) 2003-Up	1	
136564A	Piston Kit, 5R110W Forward Clutch (Bonded) 2003-04	1	
136565A	Piston Kit, 5R110W Direct Clutch (Bonded) 2003-Up	1	
136567A	Piston Kit, 5R110W Low/Reverse Clutch (Bonded) 2003-04	1	
136569A	Piston Kit, 5R110W Coast Clutch (Bonded) 2003-Up	1	
136570A	Hub/Reluctor, 5R110W Coast Clutch (2.500" Thick) (6.025"OD)(30 Slots)(Bolts To 4 Gear Overdrive Planet) 2003-Up	1	3C3Z-7H501-BA
136570B	Hub/Reluctor, 5R110W Coast Clutch (2.500" Thick)(6.025"OD)(30 Slots)(Bolts To 5 Gear Overdrive Planet) 2003-Up	1	
136580A	Planet, 5R110W Overdrive (4 Gear) (Uses A Bolt On Coast Clutch Hub And Reluctor) 2003-04	1	3C3Z-7B446-AA
136580B	Planet, 5R110W Overdrive (4 Gear)(41 Teeth Sun Gear)(Uses A Bolt On Reluctor) 2008-Up	1	
136580BA	Planet, 5R110W Overdrive (4 Gear)(41 Teeth Sun Gear)(Uses A Bolt On Reluctor And PTO Gear) 2008-Up	1	
136580BB	Planet, 5R110W Overdrive (5 Gear)(41 Teeth Sun Gear)(Uses A Bolt On Reluctor) 2008-Up	1	
136582A	Planet, 5R110W Forward (6 Gear) Steel (2.035"OD Hub) 2003-04 (4.230"OD Of Housing, Uses A 42 Teeth Sun Gear) (Small Planet)	1	3C3Z-7A398-AA
136582C	Planet, 5R110W Forward (6 Gear) Steel (1.905"OD Hub) 2005-Up (4.557"OD Of Housing)(Uses A 55 Teeth Sun Gear) (Large Planet) (With 4 Notches On Rear, Uses A 4 Tab Oil Slinger # 699C)	1	5C3Z-7A398-BA
136582CA	Planet, 5R110W Forward (6 Gear) Steel (1.905"OD Hub) 2005-Up (4.557"OD Of Housing)(Uses A 55 Teeth Sun Gear) (Large Planet) (With 6 Notches On Rear, Uses A 6 Tab Oil Slinger # 699CA)	1	
136584A	Planet, 5R110W Rear (4 Gear) 72 Teeth Hub (1st Design) 3.110" Overall Height 2003-Up	1	3C3Z-7D006-AA
136584B	Planet, 5R110W Rear (4 Gear) 72 Teeth Hub (2nd Design) 2.985" Overall Height 2003-Up	1	5C3Z-7D006-AA
136584DK	Planet Kit, 5R110W Rear (6 Clutch) 2009-Up (Contains: Rear Planet, Diode, Friction, And Steel Plates)(Retro Fits Early 5 Clutch)(When Retro Fitting Early Models Washers #243 & #250 Are No Longer Used)	1	
136590A	Ring Gear, 5R110W Overdrive Planet (94 Teeth) (30 Lugs) 2003-Up	1	3C3Z-7A153-CA
36592B	Ring Gear, 5R110W Forward Planet (Small Planet) 2003-04	1	F81Z-7D392-AB
136592C	Ring Gear, 5R110W Forward Planet (5.300"OD) 2005-Up (For Large Planet)	1	5C3Z-7D392-AA
136594A	Ring Gear, 5R110W Rear Planet (98 Teeth) (1.683" Thick) 2003-04	1	3C3Z-7A153-AA
136602A	Hub, 5R110W Forward Ring Gear (Bushing Type) 2003-04 (2.038"ID Of Bushing) (For Small Planet)	1	3C3Z-7B067-BA
136602C	Hub, 5R110W Forward Ring Gear (Bushing Type) 2005-06 (1.908"ID Of Bushing) (For Large Planet)	1	5C3Z-7B067-AA
136604A	Hub, 5R110W Rear Ring Gear (1st Design) (W/10 Holes) 2003-Up	1	3C3Z-7D164-AA
136604B	Hub, 5R110W Rear Ring Gear (2nd Design) (No Holes) 2003-Up	1	
136610A	Sun Gear, 5R110W Overdrive (No Bushing) 2003-04	1	3C3Z-7D063-AA
136622A	Shell W/Sun Gear, 5R110W (42 Teeth / 34 Teeth Sun Gear) 2003-05	1	3C3Z-7A019-BA
136622C	Shell W/Sun Gear, 5R110W (55 Teeth / 34 Teeth Sun Gear) 2005-Up (Uses A Press On Top Hat That Has 3.150"OD And .950" Thick)(Uses Thrust Washers On Rear Planet)	1	5C3Z-7A019-AA
136622CA	Shell W/Sun Gear, 5R110W (55 Teeth / 34 Teeth Sun Gear) 2009-Up (Press On Race Is 2.920"OD And Is .360" Thick)(Does Not Use Thrust Washers On Rear Planet	1	
136630A	Center Support, 5R110W (Aluminum) 1 Piece (5.440" Tall) 2003-Up	1	3C3Z-7A130-AA
136640A	Diode, 5R110W Overdrive (.625" Thick) (This Is Also The Pressure Plate) 2003-Up (Can Use 136640B)	1	5C3Z-7A089-BA
136640B	Diode, 5R110W Overdrive (.663" Thick) (This Is Also The Pressure Plate) 2003-Up (Retro Fits The 136640A)	1	7C3Z-7A089-B
136644A	Diode, 5R110W Low (1st Design) .865" Thick (Is Also The Low/Reverse Clutch Pressure Plate) 2003-Up (Use The U136644B Per Ford)	1-2	
136644B	Diode, 5R110W Low (2nd Design) .865" Thick (Is Also Low/Reverse Clutch Pressure Plate) Has A Stamped Dot On 1 Tooth Of Inner Race	1-2	3C3Z-7A089-AB
136644C	Diode, 5R110W Low (3rd Design)(Is Also Low/Reverse Pressure Plate) 2005-08	1-2	
36670C	Input Shaft, 5R110W (13 5/8" Long) 2003-Up	1	F81Z-7017-EA
136675A	Shaft, 5R110W Overdrive (For A 38 Tooth Sun Gear) 2003-Up	1	3C3Z-7A658-AA

FORD

© Whatever It Takes Transmission Parts. Inc.

136675AHP	Shaft, 5R110W Overdrive (Billet)(For A 38 Tooth Sun Gear) 2003-Up	1	
136675B	Shaft, 5R110W Overdrive (For A 41 Tooth Sun Gear) 2008-Up	1	
136675BHP	Shaft, 5R110W Overdrive (Billet)(For A 41 Tooth Sun Gear) 2008-Up	1	
136678A	Output Shaft, 5R110W (4x4) (15 1/2" Long)	1	3C3Z-7060-DD
136678B	Output Shaft, 5R110W 2WD (20" Long)	1	
136690A	Park Gear, 5R110W (14 Lugs W/18 Teeth Reluctor) 2003-Up	1	3C3Z-7A233-AA
136698A	Orificed Plug, 5R110W Forward Clutch (In Case Over 1 Center Support Bolt) 2003-04	1	3C3Z-7D376-AA
136699A	Oil Slinger, 5R110W Forward Planet (Rear) (6 Tabs) 2003-04 (Plastic) (3.980"OD)	1	3C3Z-7L339-AA
136699C	Oil Slinger, 5R110W Forward Planet (Rear) (4 Tabs) 2005 (Plastic) (4.370"OD)	1	
136699CA	Oil Slinger, 5R110W Forward Planet (Rear) (6 Tabs) 2005 (Plastic) (4.370"OD)	1	
136740A	Solenoid Body Assembly, 5R110W (7 Solenoid With 5 Pressure Switches) (Does Not Come With Wire Harness)	1	
136740B	Solenoid Body Assembly, 5R110W (7 Solenoid With 2 Pressure Switches) (Does Not Come With Wire Harness)	1	

PART #	VALVE BODY COMPONENTS	QTY	REFERENCE #
S136741-6K	End Plug Kit, 5R110W Solenoid Body (O-Ringed)(Contains: 1 End Plug & 1 O-Ring)(Sonnax) 2003-Up (Takes 5 Kits Per Transmission)	1	
136741A-1	Manual Valve, 5R110W (1st Design) 2003-11/14/03	1	
136741A-6K	End Plug Kit, 5R110W Solenoid Body (Contains: 5 End Plugs & 5 O-Rings)(Transgo) 2003-Up	1	
136741BP-1	Flow Control System, 5R110W Replace OEM Thermal Bypass (Superior)	1	
136741C-3	Spring, 5R110W TCC 2003-10	1	
S136741M-1	Manual Valve, 5R110W (Oversize) (Sonnax) (Must Use Tool #T-F-36940-TL11 & T-VB-Fix)	1	
T-F-36940-TL11	Reamer Kit, For S136741M-1	1	

PART #	HARD PARTS (Continued)	QTY	REFERENCE #
136746A	Plate, 5R110W Holds Solenoid Plate To Case (10 Bolt) 2003-Up	1	3C3Z-7H038-AA
136760A	Case, 5R110W (Gas & Diesel) (Without PTO) 2003-Up	1	3C3Z-7005-AB
136760AA	Case, 5R110W (Gas & Diesel) (With PTO) 2003-Up	1	
136761A-4	Retainer, 5R110W Sealing Ring #184 (Steel Sleeve In Rear Case)(.657" Wide)(1.969"OD) 2003-Up	1	
36761EP-4	Roll Pin, 5R110W Holds Shift Lever In Case (.113"OD) (1.006" Long)	1	
136761P-4	Roll Pin, 5R110W Holds Rooster Comb To Shift Lever 2003-Up (.159"OD) (1.325" Long)	1	
136765A	Pan, 5R110W Bottom (2WD/4x4) (3 5/8" Wide Where Filter Sits) 2003-07	1	3C3Z-7A194-AA
136765B	Pan, 5R110W Bottom 2WD/4x4 (4 1/2" Wide Where Filter Sits) 2008-Up	1	
136770A	Extention Housing, 5R110W (4x4) (Aluminum) (Cast # RF3C3P)	1	
136770B	Extension Housng, 5R110W 2WD (9 1/4" Long) (Cast # 3C3P-7A040-EC) 2003-Up	1	
136777K	Bolt Set, 5R110W Pump To Case (9 Bolts) 2003-Up	1	
136778K	Bolt Set, 5R110W Pump Stator To Body (6 Bolts) Can Use 36778AK	1	
S36779A	Pan Bolts, 5R110W (Metric) (Sonnax)	AR	
36779AK	Bolt Set, 5R110W Pan To Case (20 Pieces)	1	
136781K	Bolt Set, 5R110W Extention Housing To Case (4x4) (9 Bolts) 2003-Up	1	
136782AK	Bolt Set, 5R110W Solenoid Body To Case (23 Bolts) 2003-Up	1	
136782BK	Bolt Set, 5R110W Solenoid Body Plate To Solenoid Body	1	
36783	Bolt, 5R110W Center Support To Case (2 Per Pack) 2003-04	2	
136783A	Bolt, 5R110W Center Support To Case (With Orifice Hole) 2005-Up	2	
136784K	Bolt Set, 5R110W Holds Hub To Overdrive Planet (4 Bolts) 2003-Up	1	
136798A	Nut, 5R110W Output Shaft (Holds Shaft To Extention Housing) (4x4) (Cast # 3C3P-4791-BA) 2003-Up	1	
136853A	Cushion, 5R110W Forward Clutch (.048") 8 Teeth (5.120"ID) 2003-04	1	3C3Z-7B070-BA
136853AA	Cushion, 5R110W Forward Clutch (.048") 8 Teeth (5.380"ID) 2005-Up	1	
36860	Snap Ring, 5R110W Holds Overdrive Pressure Plate In Case (.050") 2003-Up	1	
36860A	Snap Ring, 5R110W Holds Overdrive Pressure Plate In Case (.079") 2003-Up	1	
36860B	Snap Ring, 5R110W Holds Overdrive Pressure Plate In Case (.099") 2003-Up	1	
36860C	Snap Ring, 5R110W Holds Overdrive Pressure Plate In Case (.119") 2003-Up	1	
36860D	Snap Ring, 5R110W Holds Overdrive Pressure Plate In Case (.139") 2003-Up	1	
136860A	Snap Ring, 5R110W Holds Center Support To Case 2003-Up (.109" Thick) (9 1/2"OD) Beveled	1	3C3Z-7D483-EA
136868A	Snap Ring, 5R110W Holds Overdrive Ring Gear To Center Shaft (.060" Thick) 2003-Up	1	3C3Z-7G375-CA
36871A	Snap Ring, 5R110W Holds Coast Clutch Beveled Spring In (3 1/4"OD) (.060" Thick) 2003-Up	1	F81Z-7A527-AA
136874A	Snap Ring, 5R110W holds Intermediate Clutch Retainer In 2003-Up	1	3C3Z-7D483-EA
136877A	Snap Ring, 5R110W Forward Clutch Retainer (.056" Thick) 2003-Up	1	
36878	Snap Ring, 5R110W Coast, Forward & Direct Clutch Pressure Plate (.058") 2003-Up	3	E9TZ-7D483-A
36878A	Snap Ring, 5R110W Coast, Forward & Direct Clutch Pressure Plate (.067") 2003-Up	3	E9TZ-7D483-B
36878B	Snap Ring, 5R110W Coast, Forward & Direct Clutch Pressure Plate (.076") 2003-Up	3	E9TZ-7D483-C
36878C	Snap Ring, 5R110W Coast, Forward & Direct Clutch Pressure Plate (.085") 2003-Up	3	
36878D	Snap Ring, 5R110W Coast, Forward & Direct Clutch Pressure Plate (.094") 2003-Up	3	

© Whatever It Takes Transmission Parts. Inc.

PART #	HARD PARTS (Continued)	QTY	REFERENCE #
36878F	Snap Ring, 5R110W Coast, Forward & Direct Clutch Pressure Plate (.112") 2003-Up	3	
36879	Snap Ring, 5R110W Holds Retainer In Direct Drum 2003-Up	1	E9TZ-7C122-A
36881	Snap Ring, 5R110W Holds Forward Clutch Hub In Forward Ring Gear 2003-04 (For Small Planet)	1	377132-S
136881C	Snap Ring, 5R110W Holds Forward Clutch Hub In Forward Ring Gear (.060" Thick) (5.185"OD) (For Large Planet) 2005-Up	1	
136889A	Snap Ring, 5R110W Holds Hub To Rear Ring Gear 2003-Up (.060") (6 1/4"OD)	1	3C3Z-7G375-AA
36892	Snap Ring, 5R110W Holds Low Diode In Case (.075" Thick) 2003-04	1	E9TZ-7D483-J
136892A	Snap Ring, 5R110W Holds Low Diode In Case (.097")(Flat)(Diesel) 2005-Up (Retro Fits 03-04)	1	
S136892A-1	Snap Ring, 5R110W Holds Low Diode In Case (.090" Thick) 2003-Up	1	
136892AA	Snap Ring, 5R110W Holds Low Diode In Case (.080")(Waved)(Gas) 2005-Up (Retro Fits 03-04)	1	
136893A	Snap Ring, 5R110W Holds Low/Reverse Retainer In 2003-Up	1	3C3Z-7D483-CA
136897A	Snap Ring, 5R110W Holds Ball Bearing In Extention Housing (4x4) 2003-Up	1	
136960A	Piston, 5R110W Overdrive Brake Clutch (Bonded)(8 3/16"OD) 2003-Up	1	3C3Z-7A262-DA
136960AK	Piston Kit, 5R110W (Bonded) 2003-Up (8 Pistons)	1	
136960AHP	Piston, 5R110W Overdrive Clutch (Bonded Rubber) 1996-Up (Hi-Per Blue)	1	
136960AHPK	Piston Kit, 5R110W Overdrive Clutch(Bonded) 2003-Up (8 Pistons)(Hi-Per Blue)		
136962A	Piston, 5R110W Intermediate Clutch (Bonded) (7 1/2"OD)(.645"Thick) 2003-Up	1	3C3Z-7E005-AA
136962AHP	Piston, 5R110W Intermediate Clutch (Bonded)(7 1/2"OD)(.645" Thick)(Hi-Per Blue)	1	
136964A	Piston, 5R110W Forward Clutch (Bonded) (6 5/16"OD)(1.125" Thick) 2003-Up (Cast # 3C3P-7A262-AH)	1	3C3Z-7A262-AA
136964AHP	Piston, 5R110W Direct Clutch (Bonded)(6 5/16"OD)(1.00" Thick) 2003-10	1	
136964B	Piston/Retainer, 5R110W Forward Clutch (Bonded)(5 13/16"OD)(2.870"ID) (.420" Thick) 2003-Up	1	3C3Z-7H360-AA
136964BHP	Piston/Retainer, 5R110W Forward Clutch (Bonded)(5 13/16"OD)(Hi-Per Blue)	1	
136965A	Piston, 5R110W Direct Clutch (6 5/16"OD) Bonded (1.005" Thick) 2003-Up	1	3C3Z-7A262-BA
136965AHD	Piston, 5R110W Direct Clutch (.790" Thick)(Modified Powerpack Component) 2003-10	1	
136965AHP	Piston, 5R110W Direct Clutch (Bonded)(6 5/16"OD)(1.005" Thick)(Hi-Per Blue)	1	
136965B	Piston/Retainer, 5R110W Direct Clutch (3.355"ID)(Bonded)(1.335" Thick) 2003-Up	1	3C3Z-7H359-AA
136965BHP	Piston/Retainer, 5R110W Direct Clutch (3.355"ID)(Bonded)(1.335" Thick) 2003-Up (Hi-Per Blue)	1	
136967A	Piston, 5R110W Low/Reverse Clutch (Bonded)(2.645" Thick) 2003-Up	1	3C3Z-7D402-AA
136967AHP	Piston, 5R110W Low/Reverse Clutch (Bonded)(2.645" Thick) 2003-Up (Hi-Per Blue)	1	
136969A	Piston, 5R110W Coast Clutch (Bonded)(.751"Thick) 2003-Up	1	3C3Z-7A262-CA
136969AHP	Piston, 5R110W Coast Clutch (Bonded)(.751" Thick) 2003-Up (Hi-Per Blue)	1	
136970A	Retainer W/Springs, 5R110W Overdrive Brake Clutch Piston 2003-Up	1	3C3Z-7A222-BB
136972A	Spring & Retainer, 5R110W Intermediate Clutch (24 Springs) 2003-Up	1	3C3Z-7F222-BA
136974A	Spring, 5R110W Forward Clutch Return (Beveled) 2003-04 (5.775"OD) (3.670"ID) (.086" Thick)	1	3C3Z-7B070-AA
136975A	Spring, 5R110W Direct Clutch (Beveled) .085" (5.775"OD) (4.324"ID) 2003-Up	1	
136977A	Spring/Retainer, 5R110W Low/Reverse Clutch (26 Springs) 2003-04	1	3C3Z-7D406-AA
136979A	Retainer W/Springs, 5R110W Coast Clutch Piston 2003-Up	1	3C3Z-7G299-AA
136991A	Linkage Assembly, 5R110W Internal 2003-Up	1	
136992A	Shift Lever, 5R110W External (1 Piece Type) 2003-Up	1	3C3Z-7A256-BA
36994E	Park Rod Actuator, 5R110W (10 3/8" Long) 2003-Up	1	
36995E	Park Pawl Assembly, 5R110W 2003-Up	1	
136996A	Fitting, 5R110W Case (For Cooler Lines) (Front & Rear) 2003-Up (Takes 2)	2	3C3Z-7D273-AA

© Whatever It Takes Transmission Parts. Inc.

REBUILD ESSENTIALS
for Ford 5R110W 2003-on

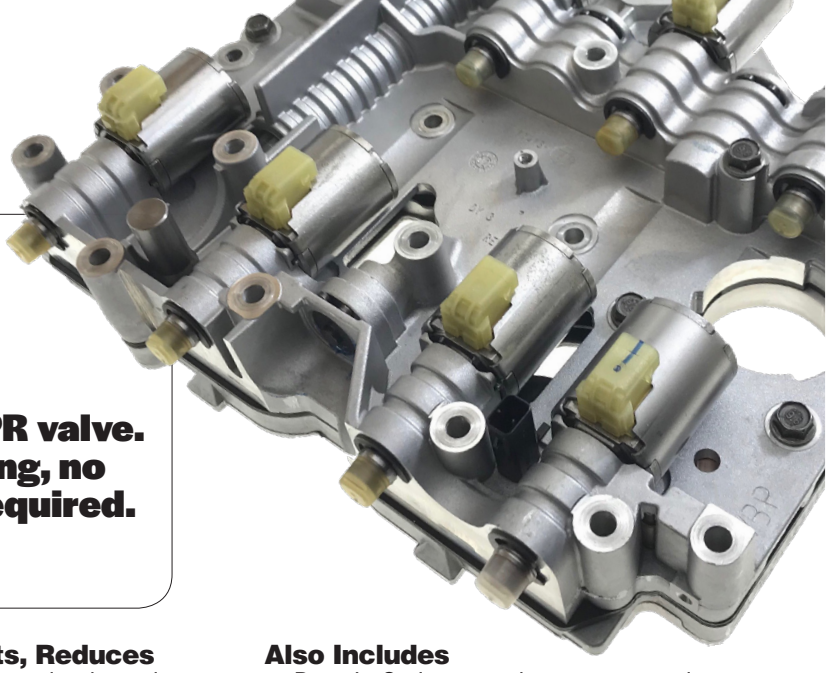

This is a Must Have Timesaver

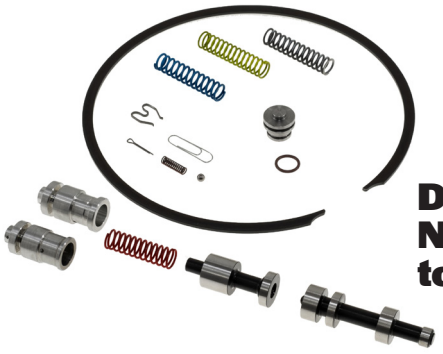

Drop-in PR valve. No reaming, no tooling required.

5R110W Valve Body Repair Kit #T136165A

Reduce the risk of the PR valve sticking in a warped pump stator. A drop-in patented 2-piece PR valve features lengthened lands to renew circuit integrity. No reaming, no special tooling required.

Corrects, Prevents, Reduces
- Insufficient converter clutch apply pressure
- Case lugs blow out
- Runaway reverse pressure-slips and/or no reverse
- Neutral at a stop- low sprag failure
- No engagement after reverse
- No move on start-up

Also Includes
- Drop-in 2 piece steel pressure regulator valve for standard size bore
- (2) EPC Pressure relief assemblies
  - (1) OEM size
  - (1) Aftermarket oversized (for reamed bores)
- Heavy-duty low reverse snap ring for added durability/case saver

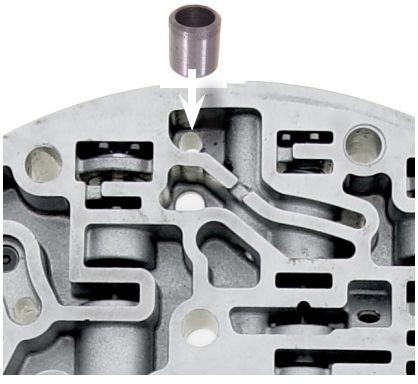

Pump Vent Stop Leak Kit #A136507B-6

This is a Must Have Timesaver

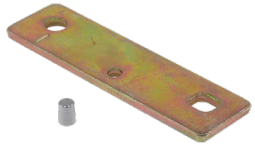

Designed to relocate the vent away from the normal cross leaks within the pump while still allowing for a functional vent. Time and heat are the usual culprits for warped pumps.

Corrects, Prevents, Reduces
- Pump warpage causing cross leaks that force oil out the vent



Pump Alignment Tool #T-5R1-PMP-ALIGN

This is a Must Have Timesaver



Corrects, Prevents, Reduces
- Severe damage from misaligned pump

Also Includes
- Tools to properly align pump
- Tech data to assist in reducing pump failure, a must on this unit!

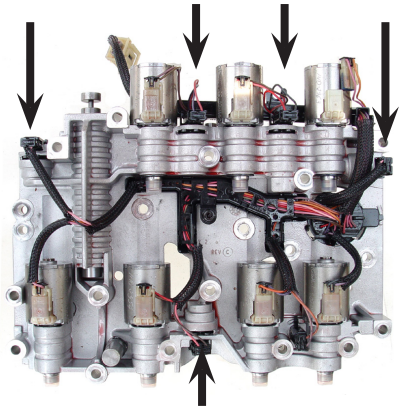

Pressure Switch Plugs #A136741A-6K



Corrects, Prevents, Reduces
- No 3-5 up shift
- Repeat direct friction failure
- Replaces broken/blown-out dummy plugs or pressure switches

Also Includes
- (5) Steel pressure switch plugs
- (5) O-rings

Technical data ©TransGo. All rights reserved. TransGo®, Shift Kit®, SK® and Reprogramming Kit™ are registered and licensed trademarks.

PART #	PAPER & RUBBER KIT	QTY.	REFERENCE #
146000	Paper & Rubber Kit, Ford 2 Speed 1959-64	1	

PART #	OVERHAUL KITS	QTY.	REFERENCE #
146002	Overhaul Kit, Ford 2 Speed 1959-64	1	

PART #	MASTER L/STEEL KIT	QTY.	REFERENCE #
146004	Master L/Steels Kit, Ford 2 Speed 1959-64	1	

PART #	MASTER W/STEEL KIT	QTY.	REFERENCE #
146006	Master W/Steels Kit, Ford 2 Speed 1959-64	1	

PART #	FILTER	QTY.	REFERENCE #
146010	Filter, Ford 2 Speed 1959-64	1	

PART #	FILTER KIT	QTY.	REFERENCE #
146011	Filter Kit, Ford 2 Speed 1959-64	1	

PART #	BANDS	QTY.	REFERENCE #
146022	Band, Ford 2 Speed (Front) 1959-64	1	
146024	Band, Ford 2 Speed (Rear) 1956-64	1	

PART #	BUSHINGS	QTY.	REFERENCE #
146030	Bushing Kit, Ford 2 Speed	1	

PART #	METAL CLAD SEALS	QTY.	REFERENCE #
36070	Seal, Ford 2 Speed Front Pump 1959-64	1	
44074	Seal, Ford 2 Speed Rear W/Out Boot 1960-64	1	
36074	Seal, Ford 2 Speed Rear W/Out Boot 1959	1	

PART #	FRICTION CLUTCH	QTY.	REFERENCE #
146106	Friction, Ford 2 Speed Direct Clutch (Alto) 1959-64	2-5	

PART #	STEEL CLUTCH	QTY.	REFERENCE #
146126	Steel, Ford 2 Speed Direct Clutch 1959-64	3-5	

PART #	MODULATORS	QTY	REFERENCE #
106160	Modulator, Ford 2 Speed Green Stripe (Single)	1	D5AZ-7A377-A
146160	Modulator, Ford 2 Speed Blue Stripe (Single)	1	C1AZ-7A377-B

PART #	OIL SEALING RINGS	QTY.	REFERENCE #
146175	Ring Kit, Ford 2 Speed 1959-64	1	
146177	Ring, Ford 2 Speed Input Shaft 1959-64	1	
146179	Ring, Ford 2 Speed Direct Clutch 1959-64	2	
146180	Ring, Ford 2 Speed Output Shaft 1959-64	2	

PART #	GASKETS	QTY.	REFERENCE #
146300	Gasket, Ford 2 Speed Bottom Pan	1	

© Whatever It Takes Transmission Parts. Inc.

© Whatever It Takes Transmission Parts. Inc.

002 Overhaul Kit

004 Master L/Steels Kit

006 Master W/Steels Kit

030 Bushing Kit

119 Friction Module

175 Ring Kit

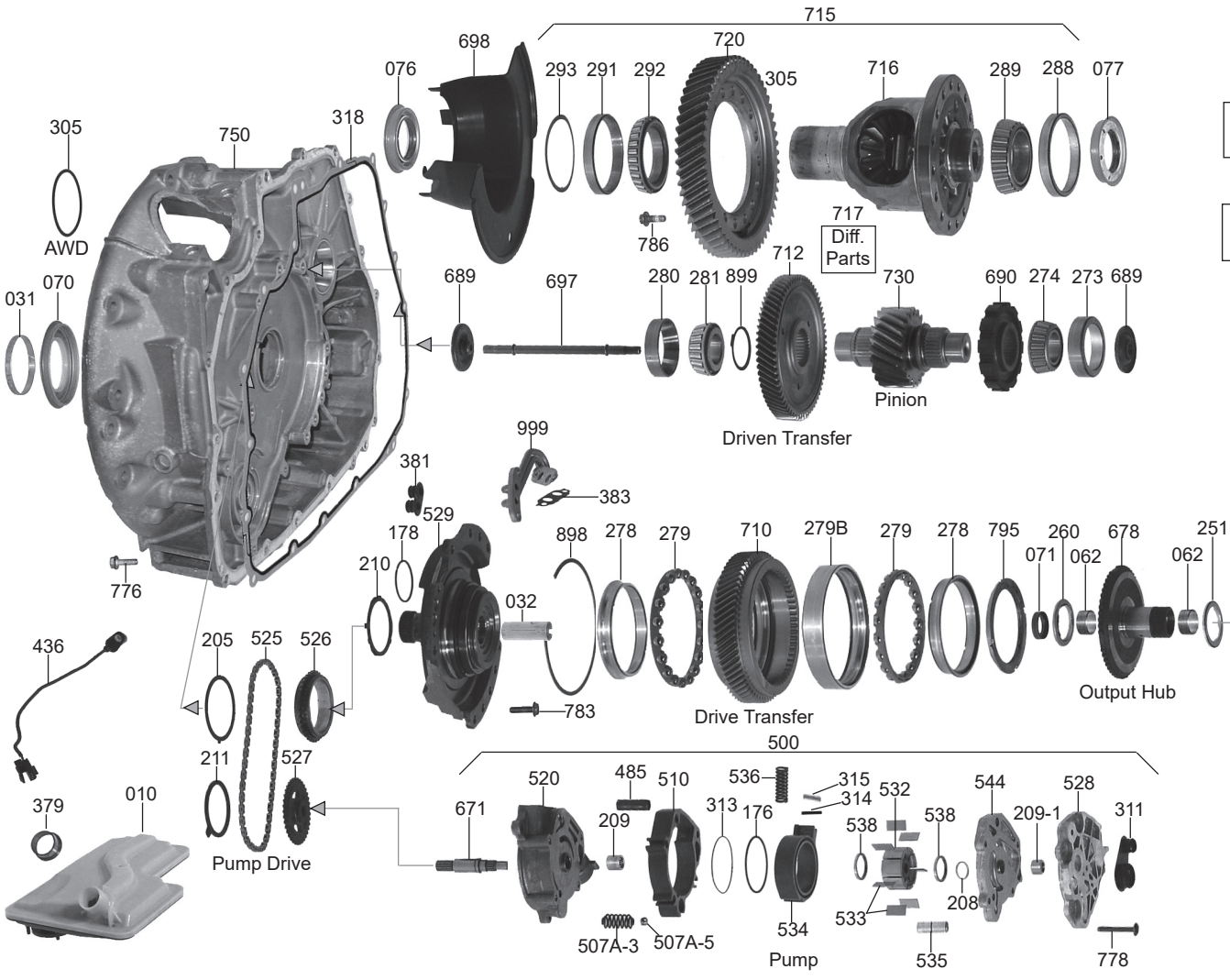

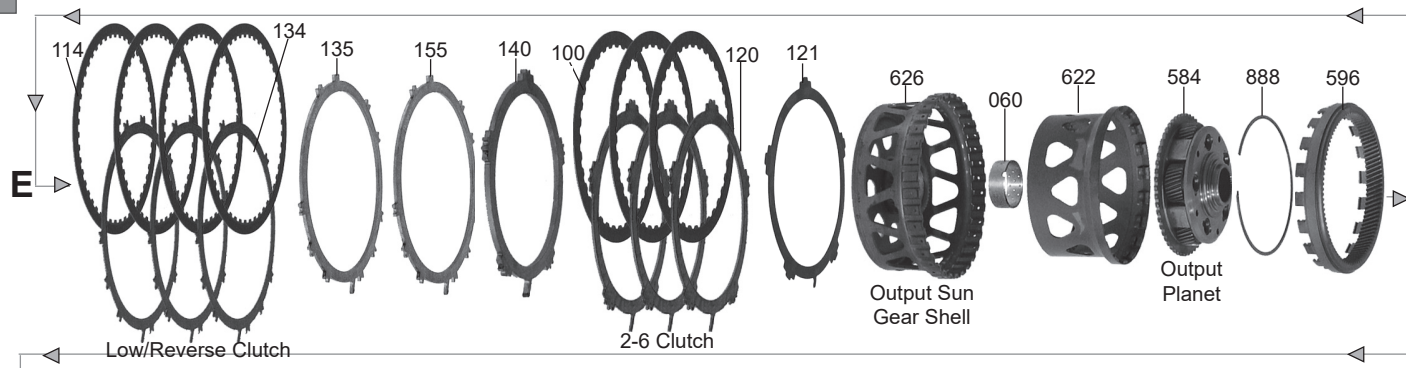

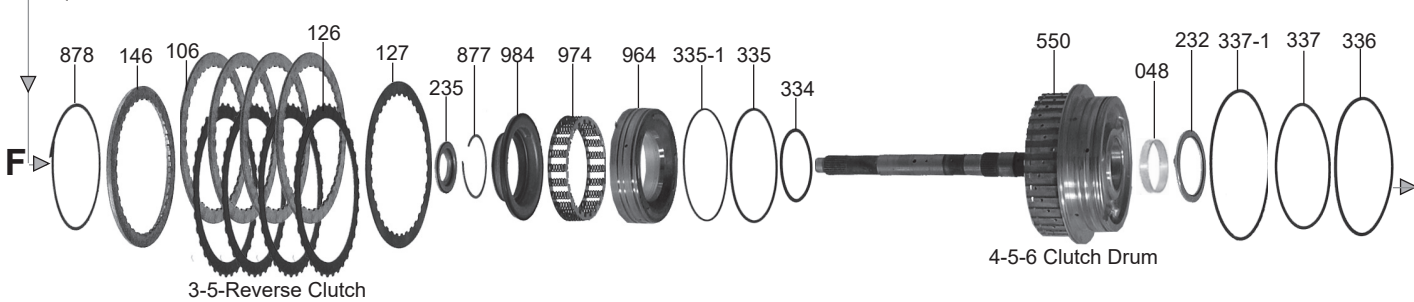

FORD

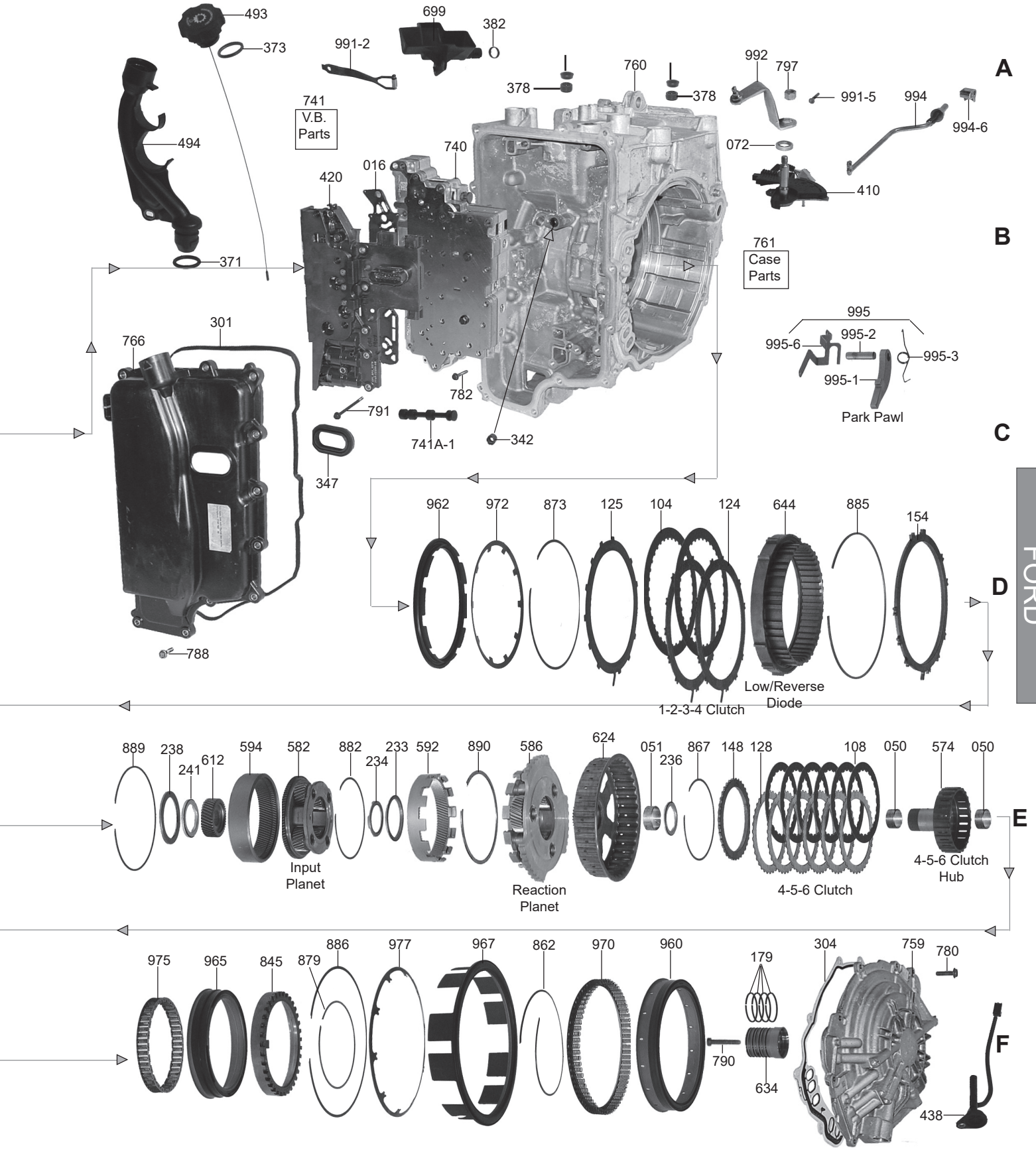

FORD

© Whatever It Takes Transmission Parts. Inc.

PART #	OVERHAUL KITS	QTY	REFERENCE #
25002A	Overhaul Kit, 6F50/6F55 6 Speed FWD 2007-14 (For Bonded Pistons Sell A25960AK)	1	
25002AP	Overhaul Kit, 6F50/6F55 (With Bonded Pistons) 2007-Up	1	
25002B	Overhaul Kit, 6T70/6T75 2007-12 (For Bonded Pistons Sell A25960AK)	1	
25002BA	Overhaul Kit, 6T70 (GENII) 2013-Up	1	
25002BP	Overhaul KIt, 6T70/6T75 (With Bonded Pistons) 2007-12	1	

PART #	MASTER L/STEELS KIT	QTY	REFERENCE #
25004A	Master L/Steels Kit, 6F50/6F55 6 Speed FWD 2007-12 (For Bonded Pistons Sell A25960AK)	1	
25004AA	Master L/Steels Kit, 6F50/55 6 Spd FWD (Gen2) 2013-Up (For Bonded Pistons Sell A25960AK)	1	
25004B	Master L/Steels Kit, 6T70/6T75 2007-12 (For Bonded Pistons Sell A25960AK)	1	

PART #	MASTER W/STEELS KIT	QTY	REFERENCE #
25006A	Master W/Steels Kit, 6F50/6F55 (6 Speed FWD) 2007-12 (For Bonded Pistons Sell A25960AK)	1	
25006AP	Master W/Steels Kit, 6F50/55 2007-12 (W/Bonded Pistons)	1	
25006B	Master W/Steels Kit, 6T70 2007-12 (For Bonded Pistons Sell A25960AK)	1	
25006BP	Master W/Steels Kit, 6T70/75 2007-12 (W/Bonded Pistons)	1	

PART #	FILTERS	QTY	REFERENCE #
25010A	Filter, 6F50/6F55/6T70/6T75 (5/8"Tall Oval Pick-Up) 2007-Up	1	
25016A	Filter Plate, 6F50/6F55/6T70/6T75 Solenoid Assembly To Valve Body (Plastic Beaded) 2007-Up	1	

PART #	BUSHINGS	QTY	REFERENCE #
25030A	Bushing Kit, 6F50/6F55/6T70/6T75 2007-Up	1	
S25031A	Bushing, 6F50/6F55/6T70/6T75 Converter Hub (1.740"OD)(1.622"ID)(.610"Wide)(2 ID Grooves) 2007-Up	1	
25032A	Bushing, 6F50/6F55/6T70/6T75 Converter Reactor (Rear)(.870"ID)(1.000"OD)(2.441" Long) 2007-Up	1	
25034A	Bushing, 6F50/55 6T70/75 Pump Shaft To Cover And Pump Shaft To Plate (Bronze)(Coated) (Replaces Both Needle Bearings In Pump #209 & 209-1)	1	
25048A	Bushing, 6F50/6F55/6T70/6T75 4-5-6 Clutch Drum (Rear)(.450"Wide)(1.970"OD)(1.830"ID) 2007-Up	1	
25050A	Bushing, 6F50/6F55/6T70/6T75 4-5-6 Clutch Hub (Front, Splined Side)(.370"Wide)(1.129"OD) (1.005"ID) 2007-Up	2	
25050B	Bushing, 6T70/6T75 4-5-6 Clutch Hub (.400"Wide)(1.125"OD)(1.005"ID)	2	
25051A	Bushing, 6F50/6F55/6T70/6T75 Reaction Sun Gear & Shell (.670"Wide)(1.510"OD)(1.380"ID) 2007-Up	1	
25060A	Bushing, 6F50/6F55/6T70/6T75 Output Sun Gear & Shell (.745"Wide)(1.545"OD)(1.425"ID) 2007-Up	1	
25062A	Bushing, 6F50/6F55/6T70/6T75 Output Hub (Front)(.320"Wide)(.985"OD)(.870"ID) 2007-Up	1	
25062B	Bushing, 6F50/6F55/6T70/6T75 Output Hub (Rear, Splined Side)(.485" Wide)(.985"OD) 2007-Up	1	

PART #	METAL CLAD SEALS	QTY	REFERENCE #
25070A	Seal, 6F50/6F55/6T70/6T75 Front (Converter) (2.845"OD) 2007-Up	1	
25071A	Seal, 6F50/6F556T70/6T75 Converter Reactor (Rear)(Inner)(.302"Thick)(1.185"OD) 2007-Up	1	
25072A	Seal, 6F50/6F55/6T70/6T75 Shift Lever (.350"Thick)(.755"OD)(.467"ID)(Rubber) 2007-Up	1	
25074A	Seal, 6T70 AWD Transfer Case 2007-Up	1	
25074B	Seal, 6F50 AWD Transfer Case (1.825"ID) 2007-Up	1	
25076A	Seal, 6F50/6F55/6T70/6T75 Axle (No Lip) (Bell Housing Side)(2.810"OD) 2007-Up (All Wheel Drive May Not Need One)	1	
25077A	Seal, 6F50/6F55/6T70/6T75 Axle (With Lip)(Case Side) (.540"Thick)(2.810"OD) 2007-Up	1	

PART #	FRICTION CLUTCHS	QTY	REFERENCE #
25100A	Friction, 6F50/6F55 2-6 Clutch (.064") (36 Teeth)(8 1/4"OD) 2007-Up	3	
25100AA	Friction, 6F50 2-6 Clutch (Generation 2)(Waved) 2012-Up	3	
25100B	Friction, 6T70/6T75 2-6 Clutch (.064")(36 Teeth)(8 1/4"OD)(Smooth) 2007-Up (Use 25100A)	3	
25100C	Friction, 6T70/6T75/6T80 (Generation 2) 2-6 Clutch (Waved) 2013-Up	3	
25104A	Friction, 6F50/6F55 1-2-3-4 Clutch (.065")(36 Teeth)(8 1/4"OD)(Straight Grooves) 2007-Up	2	
25104AA	Friction, 6F55 1-2-3-4 Clutch (Generation 2)(Waved) 2012-Up	2	
25104B	Friction, 6T70/6T75 1-2-3-4 Clutch (.065")(36 Teeth)(8 1/4"OD)(Smooth) 2007-Up (Use 25104A)	2	
25104C	Friction, 6T70/6T75/6T80 (Generation 2) 1-2-3-4 Clutch (Waved) 2013-Up	2	
25106A	Friction, 6F50/6F55 3-5-Reverse Clutch (.063")(36 Outer Teeth)(5.630"ID)(Grooved) 2007-Up	4	

© Whatever It Takes Transmission Parts. Inc.

25106AA.....Friction, 6F55 3-5-Rev Clutch (Generation 2)(Waved) 2012-Up.....4 .....
25106B .....Friction, 6T70/6T75 3-5 Reverse Clutch (.063")(36 Outer Teeth)(5.630"ID)(Smooth) 2007-Up
.....(Use 25106A) 2007-Up .....1 .....
25106C .....Friction, 6T70/6T75/6T80 (Generation 2) 3-5-Reverse Clutch (Waved) 2013-Up .....4 .....
25108A .....Friction, 6F50/6F55/6T70/6T75 4-5-6 Clutch (.063")(24 Teeth)(4.760"OD) 2007-Up .....6 .....
25108AA.....Frictioni, 6F55 4-5-6 Clutch (Generation 2)(Waved) 2012-Up .....6 .....
25108C .....Friction, 6T70/6T75/6T80 (Generation 2) 4-5-6 Clutch 2013-Up .....6 .....
25114A.....Friction, 6F50/6F55/6T70/6T75 Low/Reverse Clutch (.065")(48 Teeth)(8 5/8"OD) 2007-Up.....4 .....
25114AA .....Friction, 6F55 Low/Rev Clutch (Generation 2)(Waved) 2012-Up.....4 .....
25114C .....Friction, 6T70/6T75/6T80 (Generation 2) Low/Reverse Clutch (Waved) 2013-Up .....4 .....
25119A.....Friction Module, 6F50/6F55 6T70/6T75 2007-12.....1 1
25119B .....Friction Module 6T70/6T75 2007-Up .....1 .....
25119AA .....Friction Module, 6F55 (Generation 2) 2012-Up .....1 .....

PART #	STEEL CLUTCHS	QTY	REFERENCE #

25120A .....Steel, 6F50/6F55/6T70/6T75 2-6 Clutch (.115")(6 Teeth)(7 3/16"ID) 2007-Up .....3 .....
25121A .....Steel, 6F50/6F55 2-6 Clutch (.045")(6 Teeth)(Waved)(7 1/4"ID) 2007-Up.....1 .....
25121B .....Steel, 6T70/6T75 2-6 Clutch (.058")(6 Teeth)(Waved)(7 1/4"ID) 2007-Up.....1 .....
25124A .....Steel, 6F50/6F55/6T701/6T75 1-2-3-4 Clutch (.085")(13 Teeth)(6 15/16"ID) 2007-Up.....2 .....
25125A .....Steel, 6F50/6F55 1-2-3-4 Clutch (.065")(13 Teeth)(6 15/16"ID)(Wavy) 2007-Up.....1 .....
25125B .....Steel, 6T70/6T75 1-2-3-4 Clutch (.046")(13 Teeth)(6 15/16"ID)(Wavy) 2007-Up.....1 .....
25126A .....Steel, 6F50/6F55/6T70/6T75 3-5-Reverse Clutch (.115")(36 Inner Teeth)(6 9/16"OD) 2007-Up....4 .....
25127A .....Steel, 6F50/6F55/6T70 3-5-Reverse Clutch (.030")(36 Inner Teeth)(Waved)(6 9/16"OD) 07-Up ...1 .....
25127AR.....Drum Fix, 6T70/6T75 4-5-6 Clutch (Fixes Damage On The 3-5 Side Of The Drum When #127
.....Wavy Steel Breaks And Damages The Splines)(Contains Repair Plate & Wavy Steel) .....1 .....
25127B .....Steel, 6T70/6T75 3-5 Reverse Clutch (.050") (36 Inner Teeth)(6 9/16"OD) 2007-Up (More Wavy
.....Than 25127A) .....1 .....
25128A .....Steel, 6F50/6F55/6T70/6T75 4-5-6 Clutch (.068") (36 Teeth)(3.925"ID) 2007-Up.....6 .....
25134A .....Steel, 6F50/6F55/6T70/6T75 Low/Reverse Clutch (.070")(11 Teeth)(7 3/4"ID) 2007-Up.....3 .....
25139A .....Steel Module, 6F50/6F55/6T70/6T75 2007-Up.....1 .....

PART #	PRESSURE PLATES	QTY	REFERENCE #

25140A .....Pressure Plate, 6F50/6F55 2-6 Clutch (.260")(6 Teeth)(7 3/16"ID) 2007-Up .....1 .....
25140B .....Pressure Plate, 6T70/6T75 2-6 Clutch (.255")(6 Teeth)(7 3/16"ID) 2007-Up .....1 .....
25146A .....Pressure Plate, 6F50/6F55/6T70/6T75 3-5-Reverse Clutch (.125")(36 Internal Teeth)(Stepped)
.....(6 9/16"OD) 2007-Up .....1 .....
25148A .....Pressure Plate, 6F50/6F55/6T70/6T75 4-5-6 Clutch (.155")(36 Teeth)(Stepped)(3.925"ID)
.....2007-Up .....1 .....
25154A .....Pressure Plate, 6F50/6F55 Low/Reverse Clutch (.196")(11 Teeth)(Stepped)(7 3/4"ID)
.....(One Solid Tooth)(Cast # 7T4P-7D408-AC) 2007-Up .....1 .....
25154B .....Pressure Plate, 6T70/6T75 Low/Reverse Clutch (.150")(11 Teeth)(7 3/4"ID)
.....(No Cast #)(All Teeth Are Dipped).....1 .....
25155A .....Apply Plate, 6F50/6F55 Low/Reverse Clutch (.153")(11 Teeth)(7 3/4"ID)(Cast # 7T4P-7G486-AA)
.....(Flat)(No Step) 2007-Up.....1 .....
25155B .....Apply Plate, 6T70/6T75 Low/Reverse Clutch (.116")(11 Teeth)(7 3/4"ID)(Waved)(No Cast #)
.....2007-Up .....1 .....

PART #	VALVE BODY KITS	QTY	REFERENCE #

T25165A .....Shift Kit, 6F50 2007-Up (Transgo) .....1 .....
T25165B .....Shift Kit, 6T70 For Generation 1 2007-Up (Transgo) .....1 .....
T25165BA.....Shift Kit, 6T70 For Generation 2 (TEHCM No PS) 2013-17 (Must use w/AFL-G2-TK)(Transgo) ...1 .....
T-AFL-G2-TK ..Tool Kit, 6T70 AFL reamer and guide - must use with TransGo SK 6T70-G2.....1 .....

PART #	OIL SEALING RINGS	QTY	REFERENCE #

25175A .....Ring Kit, 6F50/6F55/6T70/6T75 (Teflon) 2007-Up .....1 .....
25176A .....Ring, 6F50/6F55/6T70/6T75 Pump Slide (.076" Thick)(2.543"OD) 2007-Up.....1 .....
25178A .....Ring, 6F50/6F55/6T70/6T75 Converter Reactor Shaft (.078" Thick)(Solid, Teflon) 2007-Up .....1 .....
25179A .....Ring, 6F50/6F55/6T70/6T75 3-5-Reverse & 4-5-6 Clutch (.093"Thick)(1.835"OD)(Solid, Teflon)
.....2007-Up .....4 .....

PART #	WASHERS & BEARINGS	QTY	REFERENCE #

25205A .....Washer, 6F50/6F55/6T70/6T75 Bell Housing To Pump Drive Sprocket (1 Outer Tab)(.063"Thick)
.....(2.485"OD)(2.135"ID)(Black Plastic) 2007-Up .....1 .....
25208A .....Shim, 6F50/6F55 Pump Shaft To Pump Plate (.037"Thick)(.733"OD)(.586"ID) 2007-Up .....1 .....

© Whatever It Takes Transmission Parts. Inc.

PART #	WASHERS & BEARINGS (Continued)	QTY	REFERENCE #
25209A	Caged Needle Bearing, 6F50/6F55/6T70/6T75 Pump Shaft To Cover (W/Seal)(.820"OD)(.583"ID) (Cast # F-554549 USA INA) 2007-Up	1	
25209A-1	Caged Needle Brg, 6F50/6F55 Pump Shaft To Plate (.425"Thick)(.605"OD)(.308"ID) 2007-Up	1	
25210A	Washer, 6F50/6F55/6T70/6T75 Bell Housing To Converter Reactor Shaft (4 Tabs, 3 Slots) (.097"Thick)(2.130"ID)(Plastic) 2007-Up	1	
25211A	Washer, 6F50/6F55/6T70/6T75 Bell Housing To Driven Pump Sprocket (1 Outer Tab)(.117"Thick) (2.240"OD)(1.890"ID)(Black Plastic) 2007-Up	1	
25232A	Brg W/Races, 6F50/6F55/6T70/6T75 4-5-6 Clutch Drum To Rear Cover (.126" Thick)(2.863"OD) (2.215"ID) 2007-Up	1	
25233A	Brg W/Races, 6F50/6F55/6T70/6T75 Input Planet To Reaction Planet (.112" Thick)(2.900"OD) (2.380"ID) 2007-Up	1	
25234A	Brg W/Races, 6F50/6F55/6T70/6T75 Input Sun Gear To Reaction Planet (.175" Thick)(2.310"OD) (1.638"ID) 2007-Up	1	
25235A	Brg W/Races, 6F50/6F55/6T70/6T75 4-5-6 Clutch Hub To Drum (.131" Thick)(2.030"OD) (1.098"ID) 2007-Up	1	
25236A	Use U25260A	1	
25238A	Brg W/Races, 6F50/6F55/6T70/6T75 Output Planet To Input Planet (.180" Thick)(3.340"OD) (2.530"ID) 2007-Up	1	
25241A	Brg W/Races, 6F50/6F55/6T701/6T75 Output Planet To Input Sun Gear (.115" Thick)(2.195"OD) (1.660"ID) 2007-Up	1	
25251A	Use U25260A	1	
25260A	Brg W/Races, 6F50/6F55/6T70/6T75 Converter Reactor To Output Hub (.125" Thick)(2.035"OD) (1.468"ID) 2007-Up (Also Fits 6F50/6F55/6T70/6T75 Output Hub To Output Sun Gear Shell) (Also Fits 6F50/6F55/6T70/6T75 Reaction Sun Gear Shell To 4-5-6 Clutch Hub #236)	1-3	
25273A	Use U25280A	1	
25274A	Use U25281A	1	
25278A	Inner Race, 6F50/6F55/6T70/6T75 Drive Transfer Gear To Converter Reactor (.590" Thick) (4.295"OD)(3.740"ID) 2007-Up	2	
25279A	Ball Brg, 6F50/6F55/6T70/6T75 Drive Transfer Gear To Converter Reactor (19 Balls W/Plastic Cage)(4.905"ID) 2007-Up	2	
25279B	Outer Race, 6F50/6F55/6T70/6T75 Goes In Transfer Drive Gear (DoubleSided)(.925" Thick) (5.315"OD) 2007-Up	1	
25280A	Cup Race, 6F50/6F55/6T70/6T75 Pinion To Bell Housing (HTF 322/329)(.707" Thick)(2.559"OD) 2007-Up (Also Fits 6F50/6F55/6T70/6T75 Pinion To Case # 273)	1-2	
25281A	Cone Bearing, 6F50/6F55/6T70/6T75 Pinion To Bell Housing (17 Rollers)(Cast #HTF 322/329) (.891" Thick)(1.262"ID) 2007-Up (Also Fits 6F50/6F55 Pinion To Case # 274)	1-2	
25288A	Cup Race, 6F50/6F55/6T70/6T75 Differential To Case (NP 417060)(.724" Thick)(3.545"OD) 2007-Up	1	
25289A	Cone Brg, 6F50/6F55/6T70/6T75 Differential To Case (22 Rollers)(NP 327312)(.913" Thick) (2.162"ID) 2007-Up	1	
25291A	Cup Race, 6F50/6F55/6T70/6T75 Differential Bearing To Bell Housing (NP26679 P900 555R) (.490" Thick)(3.545"OD) 2007-Up	1	
25292A	Cone Brg, 6F50/6F55/6T70/6T75 Differential To Bell Housing (28 Rollers)(NP 266799)(.672" Thick) (2.350"ID) 2007-Up	1	
25293A	Shim, 6F50/6F55/6T70/6T75 Differential Cup Race To Bell Housing (.028" Thick)(3.530"OD) (3.075"ID) 2007-Up	1	

PART #	GASKETS & RUBBER COMPONENTS	QTY	REFERENCE #
25301A	Gasket, 6F50/6F55/6T70/6T75 Side Pan (Molded Rubber) 2007-Up	1	
25304A	Gasket, 6F50/6F55/6T70/6T75 Rear Cover (Metal, Beaded) 2007-Up	1	
25311A	Seal, 6F50/6F55/6T70/6T75 Pump Assembly To Case (Twin Boots On Oval Base)(.460" Tall) (2.420" Long)(1.285" Wide) 2007-Up	1	
25313A	O-Ring, 6F50/6F55 Pump Slide (Under Ring # 176) 2007-Up	1	
25314A	Seal, 6F50/6F55/6T70/6T75 Pump Slide (Rubber)(.102"OD)(.863"Long) 2007-Up	1	
25315A	Seal, 6F50/6F55/6T70/6T75 Pump Slide (Teflon)(.093" Thick)(.863"Long) 2007-Up	1	
25318BW	Gasket, 6T70/6T75 Bell Housing To Case (Metal W/Bonded Rubber) 2007-Up	1	
25342A	Boot, 6F50/6F55/6T70/6T75 Valve Body To Case (Round Fluted)(.495" Tall)(.510"OD)(.325"ID) 2007-Up	1	
25347A	Boot, 6F50/6F55/6T701/6T75 Solenoid Assembly To Side Pan (Orange) 2007-Up	1	
25371A	O-Ring, 6F50/6F55 Filler Tube (.205" Thick)(1.545"OD) 2007-Up	1	
25373A	O-Ring, 6F50/6F55 Dipstick (.190" Thick)(1.500"OD) 2007-Up	1	
25376BK	Pressure Switch Fix, 6T70 Fixes Leaks On Solenoids (Fixes 4 Switches) 2007-Up (Transgo)	1	
S45376AK	Pressure Switch Kit, 6T70/6T75 Generation 1 Rebuild Kit (Contains: 5 Discs, 5 Seals, Laminate Installation Tool, Seal Installer, Piston, Seal Plunger)(Sonnax)	1	
S45376AK-1	Pressure Switch Fix, 6T70/6T75 Generation 1 Rebiuild Master Pack (Contains: 40 Discs, 40 Seals, Laminate Installation Tool, Seal Installer, Piston, Seal Plunger)(Sonnax)	1	

FORD

© Whatever It Takes Transmission Parts. Inc.

S45376A-RK... Pressure Switch Refill Kit, 6T70/6T75 Generation 1 Refills Fo rS45376AK And S45376AK-1 (Contains: 5 Discs And 5 Seals)(Sonnax) 1
25379A ..... Seal, 6F50/6F55/6T70/6T75 Filter To Pump (1.270"OD)(.974"ID) 2007-Up 1
25381A ..... Seal, 6F50/6F55/6T70/6T75 Converter Reactor To Case (Twin Boots On Oval Base)(.460" Tall) (1.350" Long)(.750" Wide) 2007-Up 1
25383A ..... Gasket, 6F50/6F55/6T70/6T75 Converter Reactor To Tube Set (Metal)(4 Holes) 2007-Up 1

PART #	TECHNICAL MANUALS	QTY	REFERENCE #

25400A ..... Technical Manual, 6F50/6F55 (ATRA) 1
25400B ..... Technical Manual, 6T70/6T75 (ATSG) 1

PART #	ELECTRICAL COMPONENTS	QTY	REFERENCE #

25410A ..... Switch, 6F50/6F55 PRNDL (6 Wire Connector)(4" Wire Harness)(2 1/2" Long Shaft W/Rooster Comb)(Cast # 7T4P-7H557-AG) 2007-Up 1
25410B ..... Switch, 6T70/6T75 PRNDL (6 Wire Connector)(13 1/2" Wire Harness)(2 1/2" Long Shaft) (Cast # 7T4P-7H557-AG) 2007-Up 1
25420A ..... Solenoid Assembly, 6F50/6F55 (19 Pin Connector)(Cast # 7T4P-7Z369-AE) 2007-Up (No Chip) 1
25420B ..... Solenoid Assembly, 6T70/6T75 (17 Pin Connector)(Metal Chip)(THESE ITEMS NEED TO BE VERIFIED BY THE VIN NUMBER!!) 1
25420BA..... Solenoid Assembly, 6T70/6T75 (17 Pin Connector)(Metal Chip) 2010-14 (THESE ITEMS NEED TO BE VERIFIED BY THE VIN NUMBER!!) 1
25420BB..... Solenoid Assembly, 6T70/6T75 (17 Pin Connector)(Metal Chip) 2013-15 (THESE ITEMS NEED TO BE VERIFIED BY THE VIN NUMBER!!)(These Must Be Flashed) 1
25436A ..... Sensor, 6F50/6F55 Output Speed (3 Prong Connector & Wire Harness 12 1/2" Long) 2007-Up... 1
25436B ..... Sensor, 6T70/6T75 Output Speed (2 Prong Connector & Wire Harness Is 11 5/8" Long) (.455"OD) 2007-Up 1
25438A ..... Sensor, 6F50/6F55 Input Speed (3 Prong Connector & Wire Harness Is 11 3/4" Long) 2007-Up.. 1
25438B ..... Sensor, 6T70/6T75 Input Speed (2 Prong Connector & Wire Harness Is 24"Long) 2007-Up..... 1

PART #	MISCELLANEOUS PARTS	QTY	REFERENCE #

25493A ..... Dipstick, 6F50/6F55 (24 3/4" Long Round Cable Type) 2007-Up 1
25494A ..... Filler Tube, 6F50/6F55 (Plastic)(11" Tall) 2007-Up..... 1

PART #	HARDPARTS	QTY	REFERENCE #

25500A ..... Pump Assembly, 6F50/6F55/6T70/6T75 (7 Vane) (Has No Hole In The Center Of The Top Cover) (Bushing Type) 2007-Up 1
25500AA..... Pump Assembly, 6F50/6F55/6T70/6T75 (7 Vane)(Has A .220"ID Hole In Center Of Top Cover) (Bearing Type) 2007-Up 1
25507A-3..... Spring, 6F50/6F55/6T70/6T75 Pump Line Overpressure Blow-Off (W/Tapered Ends)(1.380" Long) (.595"OD) 2007-Up 1
25507A-5..... Ball, 6F50/6F55/6T70/6T75 Pump Overpressure Blow-Off (.312"OD) 2007-Up..... 1
25525A ..... Chain, 6F50/6F55/6T70/6T75 Pump Drive (42 Links)(84 Pins)(.240" Thick At Pins) 2007-Up..... 1
25525AK..... Chain Kit, 6F50/6F55/6T70/6T75 Pump Drive (Contains: Chain, Pump Drive & Driven Sprocket) 2007-Up 1
25526A ..... Sprocket, 6F50/6F55/6T70/6T75 Pump Drive (W/2 ID Flats For Converter Hub)(37 Teeth) (.602" Thick)(2.058"ID) 2007-Up 1
25527A ..... Sprocket, 6F50/6F55/6T70/6T75 Pump Driven (W/14 ID Splines For Shaft)(37 Teeth)(.595" Thick) (2.847"OD) 2007-Up (Dot Faces Up) 1
25529A ..... Converter Reactor, 6F50/6F55/6T70/6T75 (10 Bolts To Bell Housing)(This Is Also Called The Drive Transfer Gear Support) 2007-Up 1
25529AA..... Converter Reactor, 6F50/6F55 (9 Bolts To Bell Housing)(This Is Also Called The Drive Tansfer Gear Support) 2007-Up 1
25529AB..... Converter Reactor, 6F50/55 6T70/75 (9 Bolts To Bell Housing 19 Roller Ball Bearing)(It Is Also Called The Drive Transfer Gear Support) 2007-Up (69 Tooth #710 Gear)(1.150 Thick Gear Teeth) (Includes #529 To #795) 1
25529AC..... Convertor Reactor, 6F50/55 (10 Bolts To Bell Housing)(Is Also Called The Drive Transfer Gear Support) 2007-Up (Includes #529 To #710 Gear .960" Thick Gear Teeth)..... 1
25532A ..... Rotor, 6F50/6F55/6T70/6T75 Pump (7 Vane)(.865" Thick)(1.800"OD)(14 Spline) 2007-Up..... 1
25533A ..... Vane, 6F506F55/6T70/6T75 Pump (.078" Thick)(.865" Long)(.466"Wide) 2007-Up..... 7
25534A ..... Slide, 6F50/6F55/6T70/6T75 Pump Outer (.868" Thick)(2.120"OD) 2007-Up 1
25535A ..... Pivot Pin, 6F50/6F55/6T70/6T75 Pump Slide (.312"OD)(1.112" Long) 2007-Up..... 1
25536A ..... Use U64536 1
64536..... Spring, 6F50/6F55/6T70/6T75 Pump Slide 2007-Up 1
25538A ..... Ring, 6F50/6F55/6T70/6T75 Pump Vane (.106" Thick)(1.185"OD)(.955"ID) 2007-Up 2

© Whatever It Takes Transmission Parts. Inc.

PART #	HARDPARTS (Continued)	QTY	REFERENCE #
25550A	Drum W/Shaft, 6F50/6F55 4-5-6 Clutch (6 Clutch)(12 11/16" Tall) 2007-Up (Aluminum) (Snap Ring Groove On Outer .235" From End)	1	
25550B	Drum W/Shaft, 6T70/6T75 4-5-6 Clutch (6 Clutch)(12 11/16" Tall) 2007-Some 2013 (Aluminum) (Snap Ring Groove On Outer .160" From End)(9 Holes In Bore)	1	
25550C	Drum W/Shaft, 6T70/6T75 4-5-6 Clutch (6 Clutch)(15 Holes In Bore) Some 2013-Up	1	
25550CK	Drum W/Shaft, 6T70/6T75 4-5-6 Clutch (6 Clutch)(15 Holes In Bore)(Includes # 574 Thru # 845) Some 2013-Up (Retro Fit For The 25550B)	1	
25574A	Hub, 6F50/6F55/6T70/6T75 4-5-6 Clutch (3.120" Tall)(3.830"OD) 2007-Up	1	
25582A	Planet. 6F50/6F55 Input (4 Gear)(Steel)(24 Teeth Pinions) 2007-Up (Cast # 07807 053672)	1	
25582B	Planet, 6T70/6T75 Input (4 Gear)(Steel)(24 Teeth Pinions) 2007-Up (Cast # 30306-1299-02)	1	
25584A	Planet, 6F50/6F55 Output (5 Gear)(Steel)(29 Teeth Pinions)(54 Lugs) 2007-Up (Cast # 10807 071971)	1	
25584B	Planet, 6T70/6T75 Output (5 Gear)(Steel)(29 Teeth Pinions)(54 Lugs) 2007-Up (Cast # 30406-1261-02)	1	
25586A	Planet, 6F50/6F55 Reaction (3 Gear)(Steel)(32 Teeth Pinions)(12 Lugs) 2007-Up (Cast # 11707 094950)	1	
25586B	Planet, 6T70/6T75 Reaction (3 Gear)(Steel)(32 Teeth Pinions)(12 Lugs) 2007-Up (Cast # 29806-1262-02)	1	
25586BA	Planet, 6T70/6T75 Reaction (4 Gear)(Steel)(32 Teeth Pinions)(12 Lugs) 2007-Up (Cast # 11107-1262-01)	1	
25592A	Ring Gear, 6F50/6F55/6T70/6T75 Input Planet (99 Teeth)(12 Lugs)(1.125" Thick)(5.475"OD) (Locks Onto The Reaction Planet) 2007-Up	1	
25594A	Ring Gear, 6F50/6F55/6T70/6T75 Output Planet (99 Teeth)(1.355" Thick)(5.470"OD)(Locks Onto The Input Planet) 2007-Up	1	
25596A	Ring Gear, 6F50/6F55/6T70/6T75 Reaction Planet (98 Teeth)(18 Lugs)(1.090" Thick) 6 9/16"OD)(Locks Onto The Output Shell) 2007-Up	1	
25612A	Sun Gear, 6F50/6F55/6T70/6T75 Input Planet (41 Teeth)(.750" Thick)(2.320"OD) 2007-Up	1	
25622A	Shell, 6F50/6F55/6T70/6T75 Output Planet (6 3/8"OD)(12 Triangle Holes In The OD)(18 Wide Lugs Inside The Big End) 2007-Up	1	
25624A	Sun Gear & Shell, 6F50/6F55/6T70/6T75 Reaction (34 Teeth)(2.135"OD Sun Gear)(36 Teeth Clutch Hub)(7 9/16"OD) 2007-Up	1	
25626A	Sun Gear & Shell, 6F50/6F55/6T70/6T75 Output (41 Teeth Sun Gear)(36 Teeth Clutch Hub) (6 3/4"OD)(16 Triangle Holes In OD) 2007-Up	1	
25634A	Ring Tower, 6F50/6F55/6T70/6T75 4-5-6 Clutch (Bolts To Ring Cover)(4 Ring)(3 Bolt) (2.067" Long) 2007-Up	1	
25644A	Diode, 6F50/6F55 Low/Reverse (10 Lug)(W/30 Teeth Clutch Hub)(1.673" Thick) 2007-Up	1	
25644B	Diode, 6T70/6T75 Low/Reverse (10 Lug)(W/36 Teeth Clutch Hub)(1.750" Thick) 2007-Up	1	
25671A	Shaft, 6F50/6F55/6T70/6T75 Pump (3.150" Long)(14 Splines On Each End) 2007-Up	1	
25678A	Hub, 6F50/6F55/6T70/6T75 Output (48 Teeth)(2.400" Tall)(1.425"OD Neck) 2007-Up	1	
25689A	Seal, 6F50/6F55/6T70/6T75 Pinion Shaft Lube Tube (Both Sides)(.595" Thick)(2.040"OD) 2007-Up	2	
25690A	Park Gear, 6F50/6F55/6T70/6T75 (12 Lugs)(.627" Wide At Lugs)(3.960"OD) 2007-Up	1	
25690A-1K	Shim Kit, 6F50/6F55/6T70/6T75 Park Gear "Anti-Rattle" (3 Shims) 2007-Up	1	
25697A	Lube Tube, 6F50/6F55/6T70/6T75 Pinion Shaft (7" Long) 2007-Up	1	
25698A	Oil Baffle, 6F50/6F55 Differential (1 Bolt To Bell)(Black Plastic)(Cast # 7F4P-7F409-AB) (3 Inner Tabs) 2007-Up	1	
25698B	Oil Baffle, 6T70/6T75 Differential (1 Bolt To Bell)(Black Plastic)(Outer Shape Differential) (5 Inner Tabs) 2007-Up	1	
25699A	Oil Baffle, 6F50/6F55/6T70/6T75 Differential (2 Bolt To Case)(W/Check Ball)(Near Park Assembly) 2007-Up	1	
25710A	Gear, 6F50/6F55/6T70/6T75 Drive Transfer (69 Teeth)(1.490" Thick)(.988" Wide Gear)(6 9/16"OD) (5.310"ID) 2007-Up	1	
25712A	Transfer Gear, 6F50/6F55/6T70/6T75 Drive (68 Teeth)(.896" Thick)(6 1/2"OD) 2007-Up	1	
25716A	Differential Housing, 6F50/6F55/6T70/6T75 4x4 (7 3/4" Tall)(16 Bolt)(2.320"OD Of Neck On Bell Housing Side)(28 Roller Bearing #292) 2007-Up	1	
25716AA	Differential Housing, 6F50/6F55/6T70/6T75 4x4 (7 3/4" Tall)(16 Bolt)(2.320"OD Of Neck On Bell Housing Side)(30 Roller Bearing #292) 2007-Up	1	
25716AB	Differential Housing, 6F50/6F55/6T70/6T75 4x4 (8 1/8" Tall)(16 Bolt)(2.320"OD Of Neck On Bell Housing Side)(28 Roller Bearing #292) 2007-Up	1	
25716B	Differential Housing, 6F50/6F55/6T70/6T75 2WD (6 1/2" Tall)(16 Bolt)(28 Roller Bearing #292) 2007-Up	1	
25716BA	Differential Housing, 6F50/6F55/6T70/6T75 2WD (6 11/16" Tall)(16 Bolt)(28 Roller Bearing #292) 2007-Up	1	
25720A	Ring Gear, 6F50/6F55 (59 Teeth)(1 Groove Away From Housing)(16 Bolt)(1.265" Thick) 07-Up	1	
25720AA	Ring Gear, 6F50/6F55 (61 Teeth)(3 Groove Away From Housing)(16 Bolt)(1.265" Thick) 07-Up	1	
25720AB	Ring Gear, 6F50/6F55 (62 Teeth)(3 Groove, 1 By Housing & 2 Away From Housing)(16 Bolt) (1.590" Thick) 2007-Up	1	

© Whatever It Takes Transmission Parts. Inc.

25720B ..... Ring Gear, 6T70/6T75 (59 Teeth)(2 Groove, 1 By Housing & 1 Away From Housing)(16 Bolt) (1.260" Thick) 2007-Up 1
25720BA ..... Ring Gear, 6T70/6T75 (61 Teeth)(2 Groove Away From Housing)(16 Bolt)(1.260" Thick) 07-Up 1
25720BAA ..... Ring Gear, 6T70/6T75 (61 Teeth)(2 Groove Away From Housing)(16 Bolt)(1.590" Thick) 07-Up 1
25720BB ..... Ring Gear, 6T70/6T75 (62 Teeth)(1 Groove Away From Housing)(16 Bolt)(1.260" Thick) 07-Up 1
25720BC ..... Ring Gear, 6T70/6T75 (61 Teeth)(No Groove)(16 Bolt)(1.260" Thick) 2007-Up 1
25730A ..... Pinion Gear, 6F50/6F55 (21 Teeth)(1 Groove By Park Gear)(1.445" Wide At Gear)(5.700" Long) 2007-Up 1
25730AA ..... Pinion Gear, 6F50/6F55 (19 Teeth)(3 Groove By Park Gear)(1.445" Wide At Gear)(5.700" Long) 2007-Up 1
25730AB ..... Pinion Gear, 6F50/6F55 (18 Teeth)(3 Groove, 2 By Park Gear & 1 By Driven Transfer Gear) (1.740" Wide At Gear)(5.700" Long) 2000-Up 1
25730B ..... Pinion Gear, 6T70/6T75 (21 Teeth)(2 Groove)(1.445" Wide At Gear, Driven Transfer Gear) (1.445" Wide At Gear)(5.700" Long) 2007-Up 1
25730BA ..... Pinion Gear, 6T70/6T75 (19 Teeth)(2 Groove By Park Gear)(1.445" Wide At Gear)(5.700" Long) 2007-Up 1
25730BAA ..... Pinion Gear, 6T70/6T75 (19 Teeth)(2 Groove By Park Gear)(1.740" Wide At Gear)(5.700" Long) 2007-Up 1
25730BB ..... Pinion Gear, 6T70/6T75 (18 Teeth)(1 Groove By Park Gear)(1.445" Wide At Gear)(5.700" Long) 2007-Up 1
25740BC ..... Pinion Gear, 6T70/6T75 (19 Teeth)(No Groove)(1.445" Wide At Gear)(5.700" Long) 2007-Up 1
25740A ..... Valve Body, 6F50/6F55 (Cast # 7T4P-7H195-AF) 2007-Up (Does Not Come With Solenoid Assembly) 1
25740B ..... Valve Body, 6T70/6T75 (Cast # RF7T4P-7A092-AC, 24223910 009)(Does Not Come With Solenoid Assembly)(Without Manual Valve) 1
25740BA ..... Valve Body, 670/6T75 (Cast # 24257449 Or 24257452)(Does Not Come With Solenoid Assembly)(Without Manuel Valve) 1

PART #	VALVE BODY PARTS	QTY	REFERENCE #

S25741-6K ..... O-Ringed End Plug Kit, 6F50/6F55/6T70/6T75 (Gen1)(Contains: 9 End Plugs & 14 O-Rings) 1
S25741A-ZK ..... Zip Kit, 6F50/6F55 2007-Up (Sonnax) 1
S25741ACAK ..... Valve Kit, 6F50/6F55/6T70/6T75 TCC Regulator (Oversized)(Contains: TCC Valve, Spring, Shuttle Valve & End Plug)(Sonnax)(Must Use T-F-124740-TL24) 1
T-F-124740-TL24 ..... Tool For S25741ACAK 1
S25741ACDK ..... Valve Kit, 6F50/6F55/6T70/6T75 TCC Control (Oversize)(Contains Valve & Spring)(Sonnax) (Must Use T-F-124740-TL14) 1
T-F-12740-TL14 ..... Tool For S25741ACDK 1
S25741AD-1 ..... Valve, 6F50/6F55/6T70/6T75 Clutch Boost Valve (Oversized)(Sonnax)(Must Use T-F-144740-TL22) 1
T-F-144740-TL22 ..... Tool For S25741AD-1 1
S25741AN-3 ..... Spring, 6F50/6F55/6T70/6T75 Isolator Valve (Sonnax)(5 Per Pack) 1
S25741ANK ..... Valve Kit, 6F50/6F55 Isolator (Also Fits 6T70/6T75 Generation 1) 1
S25741APAK ..... Valve Kit, 6F50/6F55/6T70/6T75 Pressure Regulator (Oversized)(Contains: Oversized Valve, Spring, & End Plug)(Sonnax)(Must Use T-F-124740-TL12) 1
T-F-124740-TL12 ..... Tool For S25741APAK 1
S25741B-EK ..... Piston Set, 6T70/6T75 4-5-6 Accumulator (Contains: O-Ringed Piston, Small Spring, Large Spring & 2 O-Rings)(Sonnax) 1
S25741B-ZK ..... Zip Kit, 6T70 (With Pressure Switches)(Generation 1) (Sonnax) 1
S25741F-1 ..... Valve, 6F50/6F55/6T70/6T75 Actuator Feed Limit (Oversized)(Requires T-F-104740-TL12 And T-VB-Fix) 1
T-F-104740-TL12 Tool Kit For S25741F-1 (Requires T-VB-Fix) 1
S25741QK ..... Valve Kit, 6F50/55 & 6T70/75 2-6 Clutch Regulator (Oversized)(Contains: Regulator Valve, Gain Valve, Spring End Plug) (Must Use T-F-124740-TL17) 1
T-F-124740-TL17 ..... Tool For S25741QK 1

PART #	HARDPARTS (Continued)	QTY	REFERENCE #

25750A ..... Bell Housing, 6F50/6F55 AWD (Cast # RF7T4P-7976-BD)(2 3/4" Top Bolts)(2.805"OD Axle Seal Hole)(9 Holes For Transfer Case)(12:30 Starter Location)(10 Bolts Hold The Converter Reactor In) 1
25750AA ..... Bell Housing, 6F50/6F55 AWD (Cast # RFAA5P-7976-BA)(2 3/4" Top Bolts)(2.805"OD Axle Seal Hole)(9 Holes For Transfer Case)(12:30 Starter Location)(9 Bolts Hold The Converter Reactor In) 1
25750AB ..... Bell Housing, 6F50 AWD (Cast # RF-7T4P-7976-CA)(2.805"OD Axle Seal Hole)(9 Holes For Transfer Case)(12:30 Starter Location)(9 Bolts Hold Converter Reactor In) 1
25750B ..... Bell Housing, 6T70/6T75 2WD (Cast # 24237405)(5 3/8" Top Bolts)(2.805"OD Axle Seal Hole) (2:30 Starter Location) 1
25750BA ..... Bell Housing, 6T70/6T75 2WD (Cast # 24237404)(5 3/8" Top Bolts)(2.805 Axle Seal Hole) (2:30 Starter Location) 1

© Whatever It Takes Transmission Parts. Inc.

PART #	HARDPARTS (Continued)	QTY	REFERENCE #
25750C	Bell Housing, 6T70 (Chevy/Saturn) AWD (Cast # 24242367)(5" Top Bolts)(Starter At 2:30)(2.880"Axle Seal)	1	
25750D	Bell Housing, 6T70/6T75 (AWD)(5 1/4" Top Bolts)(Starter At 2:30)(2.880" Axle Seal)(Cast # 24264615)	1	
25759A	Rear Cover, 6F50/6F55/6T70/6T75 (10 Bolt)(Cast # RF8A8P-7B332-AA or 24236696 or 24258978)(.935"ID Sensor Hole) 2007-Up	1	
25760A	Case, 6F50/6F55 (Ford)(Cast # RF7T4P-7006-BE)(14 Pan Bolts)(18 Threaded Holes To Bell)(4 Threaded Bosses On Top) 2007-Up	1	
25760B	Case, 6T70/6T75 (Chevy)(Cast # 24237212)(14 Pan Bolts)(17 Threaded Holes To Bell)(4 Threaded Bosses On Top) 2007-Up	1	
25760BA	Case, 6T70/6T75 (Chevy)(Cast # 24237211) 2007-Up	1	
25760BB	Case, 6T70/6T75 (Chevy)(Cast # 24237917)(14 Pan Bolts) 2007-Up	1	
25760BC	Case, 6T70/6T75 (Chevy AWD)(Cast # 24242358) 2007-Up	1	
25760BD	Case, 6T70/6T75 (Chevy) (Cast #24242353) 2007-Up	1	
25760D	Case, 6T70/6T75 (Chevy)(Cast # 24273511)		
25766A	Pan, 6F50/6F55/6T70/6T75 Side (14 Bolt) (Plastic) 2007-Up	1	
25776AK	Bolt Set, 6F50/6F55 Case To Bell Housing (19 Pieces) 2007-Up	1	
25776BK	Bolt Set, 6T70/6T75 Case To Bell Housing (17 Pieces) (1.675" Long) 2007-Up	1	
25777AK	Bolt Set, 6F50/6F55/6T70/6T75 Pump To Bell Housing (3 Pieces)(1.185" Long) 2007-Up	1	
25778AK	Bolt Set, 6F50/6F55/6T70/6T75 Pump Assembly (2.287" Long)(5 Pieces) 2007-Up	1	
25780AK	Bolt Set, 6F50/6F55/6T70/6T75 Rear Cover To Case (10 Pieces) 2007-Up	1	
25782AK	Bolt Set, 6F50/6F55 Valve Body To Case (10 Pieces) 2007-Up (10mm x 2.718" Long)	1	
25782BK	Bolt Set, 6T70/6T75 Valve Body To Case (10 Pieces)(8 Pcs 10mm x 2.718" And 2 Pcs 10mm x 2.383") 2007-Up	1	
25783AK	Bolt Set, 6F50/6F55/6T70/6T75 Converter Reactor To Bell Housing (10 Pieces) 2007-Up	1	
25784AK	Bolt Set, 6F50/6F55/6T70/6T75 Converter Reactor Tubes (4 Pieces) 2007-Up	1	
25786AK	Bolt Set, 6F50/6F55/6T70/6T75 Differential Ring Gear (16 Pieces) 2007-Up(13mm Hex Head x 1.310" Long)	1	
25788AK	Bolt Set, 6F50/6F55 Side Pan To Case (14 Pieces) 2007-Up (4 Studs 13mm x 2.170" And 10 Pieces 10mm x 1.410")	1	
25788BK	Bolt Set, 6T701/6T75 Side Pan To Case (14 Pieces) 2007-Up (2 Studs 10mm x 1.910" And 12 Pieces 10mm x 1.430")	1	
25790AK	Bolt Set, 6F50/6F55/6T70/6T75 Rear Support To Rear Cover (3 Pieces) 2007-Up	1	
25791AK	Bolt Set, 6F50/6F55 Solenoid Assemby To Case (13 Pieces) 2007-Up (3 Pcs 10mm x 3.980", 4 Pcs 10mm x 3.980", 2 Pcs 10mm x 2.705", 1 Pc 10mm x 1.865")	1	
25791BK	Bolt Set, 6T70/6T75 Solenoid Assembly To Case (11 Pieces) 2007-Up (3 Pcs 10mm x 3.980", 4 Pcs 8mm x 3.423", 2 Pcs 10mm x 2.777", 1 Pc 10mm x 2.382", 1 Pc 10mm x 1.850")	1	
25795A	Nut, 6F50/6F55/6T70/6T75 Holds Drive Transfer Gear To Converter Reactor (Stepped W/4 Notches)(.275" Thick)(4.255"OD)(3.270"ID) 2007-Up	1	
25797A	Nut, 6F50/6F55 External Linkage (Holds Shift Lever On) 2007-Up (15mm)(.410" Thick)	1	
25797B	Nut, 6T70/6T75 External Linkage (Holds Shift Lever On) 2007-Up (15mm)(.385" Thick)	1	
25845A	Reluctor, 6F50/6F55/6T70/6T75 3-5-Reverse Clutch (Steel)(36 Outer Lugs,1 Inner Lug)(.805" Thick)(6 5/16"OD) 2007-Up	1	
25862A	Snap Ring, 6F50/6F55/6T70/6T75 Holds 2-6 Clutch Retainer In Rear Cover (.059" Thick)(7"OD) 2007-Up	1	
25867A	Snap Ring, 6F50/6F55/6T70/6T75 Holds 4-5-6 Clutch Pressure Plate In Drum (.060" Thick)(5.210"OD) 2007-Up	1	
25873A	Snap Ring, 6F50/6F55/6T70/6T75 Holds 1-2-3-4 Clutch Return Spring In Case (8 5/8"OD) 2007-Up	1	
25877A	Snap Ring, 6F50/6F55/6T70/6T75 Holds 4-5-6 Clutch Retainer In Drum (.059" Thick)(2.670"OD) 2007-Up	1	
25878A	Snap Ring, 6F50/6F55/6T70/6T75 Holds 3-5-Reverse Pressure Plate On 4-5-6 Clutch Drum (.060" Thick)(5 1/5"OD) 2007-Up	1	
25879A	Snap Ring, 6F50/6F55 Holds 3-5-Reverse Clutch Housing To 4-5-6 Clutch Drum (.060" Thick)(5.010"OD) 2007-Up	1	
25882A	Snap Ring, 6F50/6F55/6T70/6T75 Holds Output Planet Ring Gear To The Input Planet (.068" Thick)(5.240"OD) 2007-Up	1	
25885A	Snap Ring, 6F50/6F55 Holds Diode In Case (.117" Thick)(9 1/4"OD) 2007-Up	1	
25885B	Snap Ring, 6T70/6T75 Holds Diode In Case (.080" Thick)(.200" Wide)9 1/4"OD)(Hooked On One End) 2007-Up	1	
25886A	Snap Ring, 6F50/6F55/6T70/6T75 Holds Low/Reverse Clutch Spring In Rear Cover (.059" Thick)(9 7/8"OD) 2007-Up	1	
25888A	Snap Ring, 6F50/6F55/6T70/6T75 Holds Shell To Output Planet (.068" Thick)(5.710"OD) 2007-Up	1	
25889A	Snap Ring, 6F50/6F55/6T70/6T75 Holds Reaction Planet Ring Gear To Output Shell (.079"OD)(6 3/8"OD) 2007-Up	1	

FORD

© Whatever It Takes Transmission Parts. Inc.

25890A ..... Snap Ring, 6F50/6F55/6T70/6T75 Holds Input Planet Ring Gear To Reaction Planet (.080" Thick)(5.460"OD) 2007-Up 1
25898A ..... Snap Ring, 6F50/6F55/6T70/6T75 Holds Outer Race # 279B In Transfer Gear (Tapered) (.083" Thick)(5.910"OD) 2007-Up 1
25899A ..... Snap Ring, 6F50/6F55/6T70/6T75 Holds Drive Transfer Gear On Pinion Shaft (.062" Thick) (1.848"OD) 2007-Up 1
25960A ..... Piston, 6F50/6F55/6T70/6T75 2-6 Clutch (Bonded)(1.250" Tall)(8 1/8"OD)(6 7/8"ID) 2007-Up 1
25960AK ..... Piston Kit, 6F50/6F55/6T70/6T75 (Bonded)(Contains: 5 Pistons) 2007-12 1
25960ABK ..... Piston Kit, 6F50/6F55 (Bonded)(Contains: 5 Pistons) 2010-Up 1
25960BK ..... Piston Kit, 6T70/75 (Bonded)(Contains 5 Pistons) 2012-Up 1
25962A ..... Piston, 6F50/6F55/6T70/6T75 1-2-3-4 Clutch (Bonded)(.640" Thick)(8"OD)(6 3/4"ID) 2007-L12 1
25962AA ..... Piston, 6F50/6F55 1-2-3-4 Clutch (Bonded)(.625" Thick)(8"OD)(6 3/4"ID) 2010-Up 1
25962B ..... Piston, 6T70/6T75 1-2 & 3-4 (Bonded)(.655"Thick)(8"OD)(6 3/4"ID) Late 2012-Up 1
25964A ..... Piston, 6F50/6F55/6T70/6T75 4-5-6 Clutch (Aluminum)(1.125" Thick)(4.585"OD)(2.735"ID) 2007-Up 1
25965A ..... Piston, 6F50/6F55/6T70/6T70E 3-5-Reverse Clutch (Bonded)(1.150" Thick)(6 5/16"OD) (5.130"ID) 2007-Up 1
25967A ..... Piston, 6F50/6F55/6T70/6T75 Low/Reverse Clutch (Bonded)(1.815" Thick)(9 3/8"OD) 2007-Up 1
25970A ..... Spring/Retainer, 6F50/6F55/6T70/6T75 2-6 Clutch Return (72 Springs)(7"OD) 2007-Up 1
25970AK ..... Spring/Retainer With Snap Ring, 6F50/6F55/6T70/6T75 2-6 Clutch Return 2007-Up 1
25972A ..... Spring, 6F50/6F55/6T70/6T75 1-2-3-4 Clutch Return (10 Lugs)(.064" Thick)(8 1/4"OD) 2007-Up 1
25974A ..... Spring, 6F50/6F55/6T70/6T75 4-5-6 Clutch Return (22 Springs)(.750" Thick)(4.120"OD)(3.445"ID) 2007-Up 1
25975A ..... Spring/Retainer, 6F50/6F55 3-5-Reverse Clutch Return (50 Springs)(.750" Thick)(5.855"OD) 2007-Up 1
25975B ..... Spring/Retainer, 6T70/6T75 3-5-Reverse Clutch Return 2007-Up 1
25977A ..... Spring, 6F50/6F55 Low/Reverse Clutch Return (.063" Thick)(9 3/8"OD) 2007-Up (10 Forked Inner Lugs) 1
25977B ..... Spring, 6T70/6T75 Low/Reverse Clutch Return (.057" Thick)(9 3/8"OD) 2007-Up (10 Square Inner Lugs) 1
25977BK ..... Spring W/Snap Ring, 6T70/6T75 Low/Reverse Clutch Return 2007-Up 1
25984A ..... Retainer/Piston, 6F50/6F55/6T70/6T75 4-5-6 Clutch (Bonded)(.845" Thick)(4.315"OD)(2.610"ID) 2007-Up 1
25991A-2 ..... Detent Spring, 6F50/6F55/6T70/6T75 Valve Body (1 Bolt)(.950" Wide)(4.340" Long) 2007-Up 1
25991A-5 ..... Nail, 6F50/6F55/6T70/6T75 Holds PRNDL Switch In Case (1 1/4"Long) 2007-Up 1
25992A-1 ..... Shift Lever, 6F50/6F55 External (L-Shaped)(.902" Wide)(Has A .277"OD Ball) 2007-Up 1
25992B-1 ..... Shift Lever, 6T70/6T75 External (Straight)(.936" Wide)(.238"OD Ball)(3.010" Long) 2007-Up 1
25994A ..... Park Rod Actuator, 6F50/6F55/6T70/6T75 (11 1/2" Long)("Z" Shaped)(.835"OD Ball) 2007-Up 1
25994A-6 ..... Guide, 6F50/6F55/6T70/6T75 Park Rod Actuator (Held In Case By 2 Pins) 2007-Up (1.860" Long) (.860" Thick)(.310"OD) 1
25995A ..... Park Pawl Assembly, 6F50/6F55 (3 Pieces) 2007-Up (Park Pawl Has .896" Hole And Is 4.213" Long)(Pin Is .890" x 1.803")(Spring Has "L" End) 1
25995A-6 ..... Bracket, 6F50/6F55/6T70/6T75 Park Rod (2 Bolt To Case)(Cast #7T4P-7D419-AC) 2007-Up 1
25995B ..... Park Pawl Assembly, 6T70/6T75 (3 Pieces) 2007-Up (Park Pawl Has .896" Hole And Is 4.213" Long)(Pin Is .890" x 1.803")(Spring Is Hooked On The End) 1
25999A ..... Tube Set, 6F50/6F55/6T70/6T75 Converter Reactor (4 Bolt)(6" Long) 2007-Up 1

© Whatever It Takes Transmission Parts. Inc.

002 Overhaul Kit

004 Master L/Steels Kit

006 Master W/Steels Kit

119 Friction Module

139 Steel Module

175 Ring Kits

400 Technical Manuals

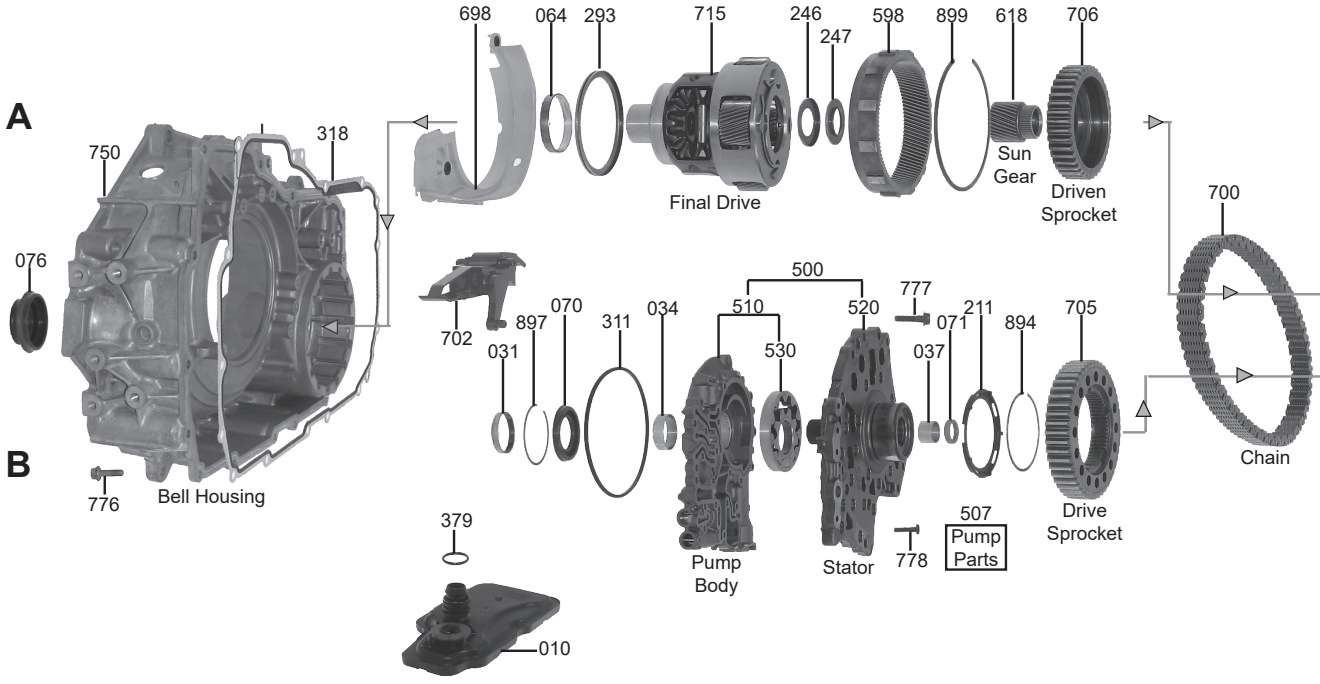

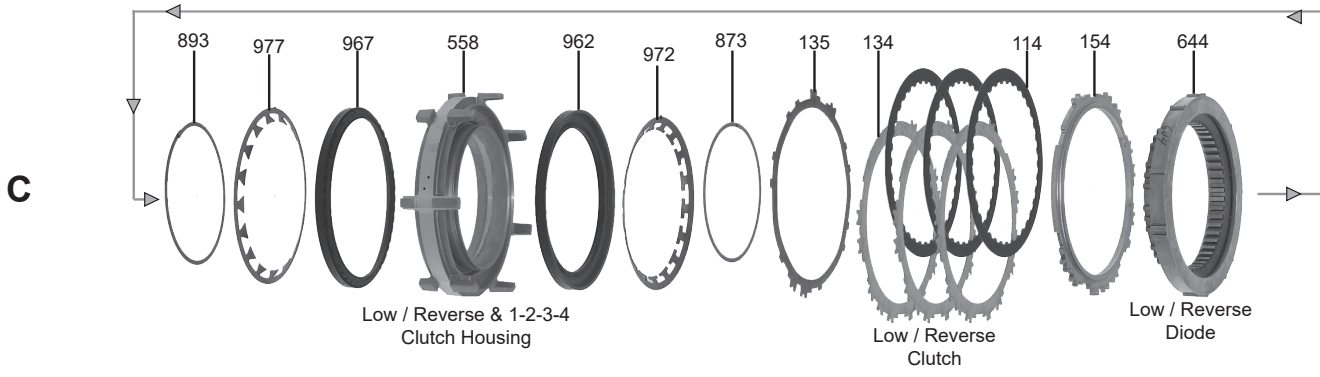

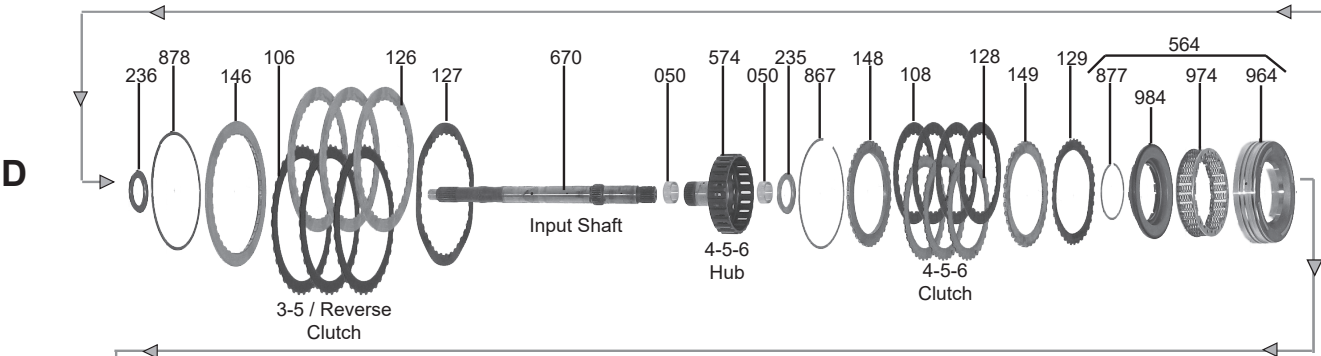

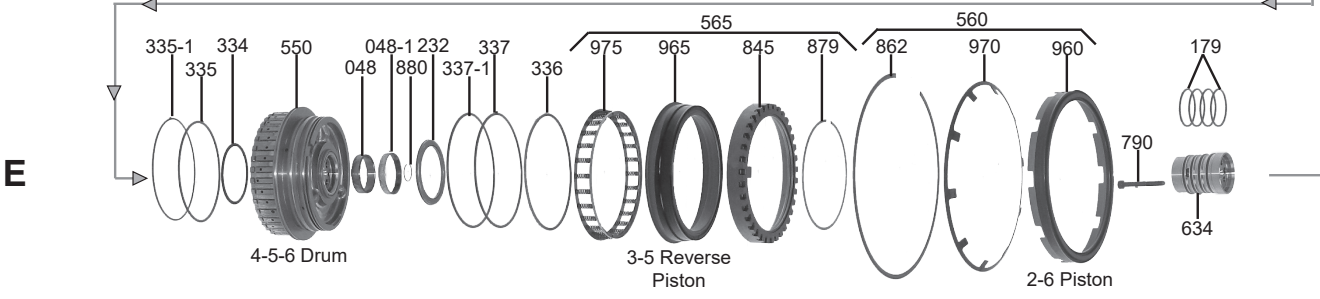

FORD

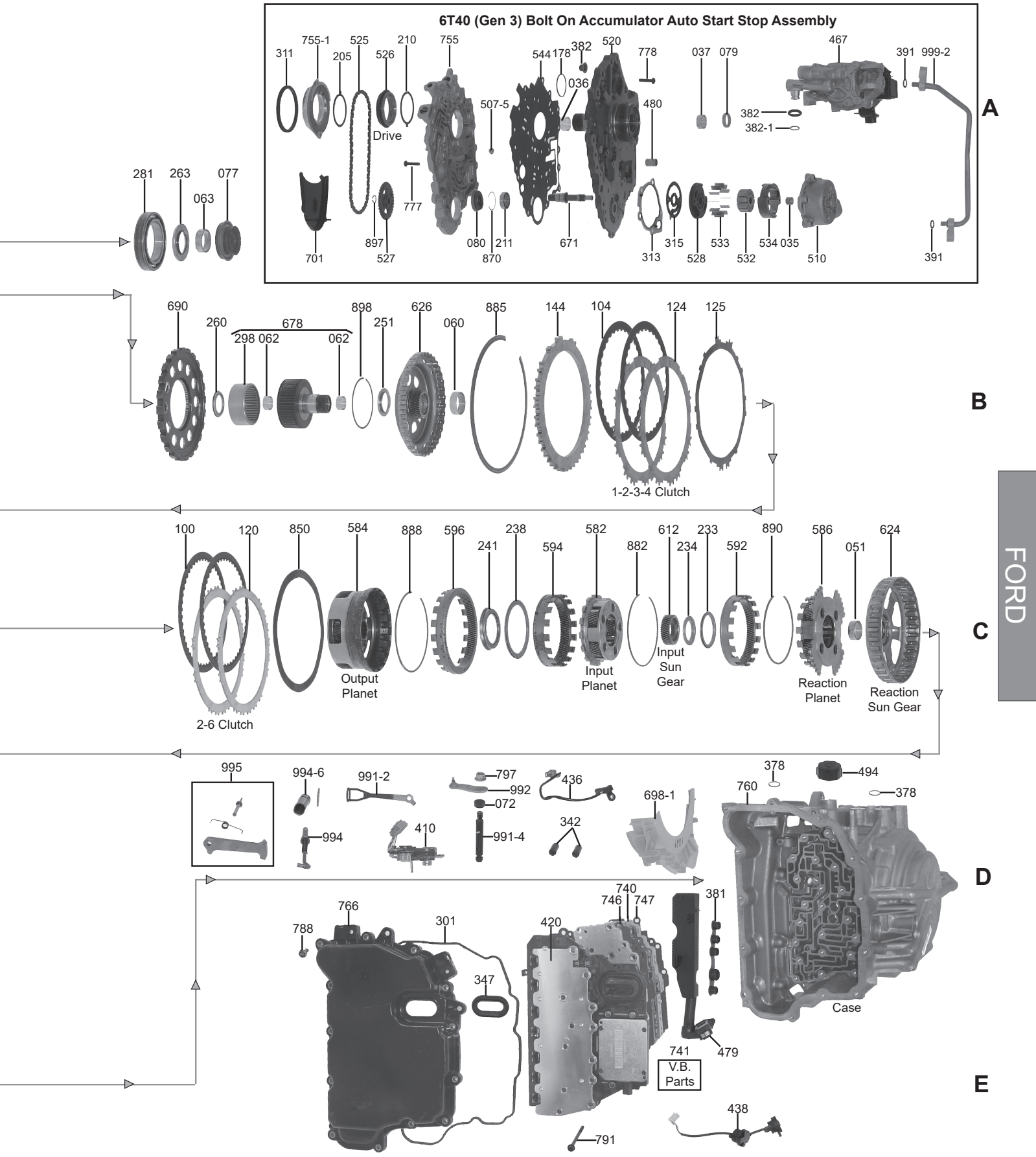

© Whatever It Takes Transmission Parts. Inc.

PART #	OVERHAUL KITS	QTY	REFERENCE #
46002AW	Overhaul Kit, 6T40/6T45/6T50 (W/Molded Rubber Pan Gasket) 2008-13 (For Bonded Pistons Sell A46960AK)	1	KP52900ZX
46002ABW	Overhaul Kit, 6T40/6T45 (Gen II) 2012-Up (With Molded Rubber Pan Gasket)	1	
46002B	Overhaul Kit, 6F35 2009-Some 13 (For Bonded Pistons Sell A46960BK)(Front Seal Has No Snap Ring)	1	KP59900ZX
46002BA	Overhaul Kit, 6F35 Some 2013-Up (Front Seal Held In By Snap Ring)	1	
46002CW	Overhaul Kit, 6T30 2009-Up (With Molded Rubber Pan Gasket)(For Bonded Pistons Sell 46960CK)	1	

PART #	MASTER L/STEELS KITS	QTY	REFERENCE #
46004AW	Master L/Steels Kit, 6T40/6T45/6T50 (W/Molded Rubber Pan Gasket) 2008-11 (For Bonded Pistons Sell A46960AK)	1	
46004B	Master L/Steels Kit, 6F35 2009-Some 13(For Bonded Pistons Sell A46960BK) (Front Seal Has No Snap Ring)	1	
46004BA	Master L/Steels Kit, 6F35 Some 2013-Up (Front Seal Held In By Snap Ring)	1	
46004CW	Master L/Steels Kit, 6T30 2009-Up (With Molded Rubber Pan Gasket)(For Bonded Pistons Sell A46960CK)	1	

PART #	MASTER W/STEELS KITS	QTY	REFERENCE #
46006AW	Master W/Steels Kit, 6T40/6T45/6T50 (W/Molded Rubber Pan Gasket) 2008-11 (For Bonded Pistons Sell A46960AK)	1	
46006B	Master W/Steels Kit, 6F35 2009-Some 13 (For Bonded Pistons Sell 46960BK) (Front Seal Has No Snap Ring)	1	
46006BAP	Master W/Steels, 6F35 (With Pistons) Some 2013-Up (Front Seal Held In By Snap Ring)	1	
46006CW	Master W/Steels Kit, 6T30 2012-Up With Molded Rubber Pan Gasket (For Bonded Pistons Sell 46960CK)	1	

PART #	FILTERS	QTY	REFERENCE #
46010A	Filter, 6T40/6T45 (9 5/8”Long)(5”Wide)(All Plastic) 2008-Up	1	.24230708
46010B	Filter, 6F35 (9 13/8”Long)(7 1/8” Wide)(1/2 Plastic, 1/2 Metal) 2009-Some 13	1	.9L8Z-7A098-B
46010BA	Filter, 6F35 (Plastic With .562” Inlet Height) Some 2013-Up (9 1/2”Long)(7 1/2”Wide)	1	.BB5Z-7A098B
46010C	Filter, 6T30 (10” Long)(5 3/8” Wide)(All Plastic) 2009-Up	1	.24237508
46010H	Filter, 6T40 (Generation 3) (5 1/2”Wide x 7 3/4”Long) 2012-Up	1	
46016A	Filter Plate, 6T30/6T40 Solenoid Assembly To Valve Body (Plastic Beaded)(Cast #Z02) (22 Filter Sections) 2008-Up	1	.24242274
46016H	Filter Plate, 6T40 Hybrid Solenoid Assembly To Valve Body (Plastic Beaded)(Cast # Z03) (3 Filter Sections) 2012-Up	1	

PART #	BUSHINGS	QTY	REFERENCE #
46030A	Bushing Kit, 6T40/6T45/6T50 2008-Up (13 Bushings)	1	
46030B	Bushing Kit, 6F35 2009-Up (9 Bushings)(Also Fits 6T40/6T45)	1	
46030C	Bushing Kit, 6T30 2008-Up (12 Bushings)	1	
46034A	Bushing, 6T40/6T45/6T50 (Generation 1) Pump Body (.700”Wide) 2008-11 (Also Fits 6F35 2009-Up (Also Fits 6T30 2009-Up)	1	
46034B	Bushing, 6T40/6T45/6T50 (Generation 2) Pump Body (.590” Wide) 2012-Up	1	
46034BT	Bushing, 6T40/6T45/6T50 (Generation 2) Pump Body (.590” Wide) 2012-Up	1	
46035H	Bushing, 6T40 (Generation 3) Pump Shaft To Body (.372”ID)(Babbitt) 2012-Up	1	
46036H	Bushing, 6T40 (Generation 3) Stator To Input Shaft (Front)(.793”ID) 2012-E14	1	
46037A	Bushing, 6T40 Stator (Rear) (.755”Wide)(.792”ID) 2008-Up	1	
46037B	Bushing, 6F35 Stator (Rear)(.829”Wide)(.792”ID) 2009-Up	1	
46037C	Bushing, 6T30 Stator (Rear)(.720”ID)(.870”OD) 2008-Up	1	
46048-1A	Bushing, 6T40/6F35 4-5-6 Clutch Drum (Rear)(.324”Wide)(1.841”ID) 2008-Up	1	
46048-1C	Bushing, 6T30 4-5-6 Clutch Drum (Rear)(1.840”ID) 2008-Up	1	
46048A	Bushing, 6T40 4-5-6 Clutch Drum (Front)(.415”Wide)(1.637”ID) 2008-Up	1	
46048B	Bushing, 6F35 4-5-6 Clutch Drum (Front)(.360”Wide)(1.637”ID) 2009-Up	1	
46048C	Bushing, 6T30 4-5-6 Clutch Drum (Front)(1.637”ID) 2008-Up	1	
46050A	Bushing, 6T40/6F35 4-5-6 Clutch Hub (.302”Wide)(.824”ID) 2008-Up		
46050C	Bushing, 6T30 4-5-6 Clutch Hub (.820”OD)(.725”ID)(Font & Rear) 2008-Up	2	
46051A	Bushing, 6T40/6F35 Reaction Sun Gear (.553”Wide)(1.184”ID) 2008-Up	1	
46051C	Bushing, 6T30 Reaction Sun Gear (.550”Wide)(1.080”ID) 2008-Up	1	
46060A	Bushing, 6T40 Output Planet Sun Gear (.545”Wide)(1.365”ID) 2008-Up	1	
46060B	Bushing, 6F35 Output Planet Sun Gear (.558”Wide)(1.365”ID) 2009-Up	1	
46060C	Bushing, 6T30 Output Planet Sun Gear (1.155”ID)(1.280”OD)(W/Grooves) 2008-Up	1	
46062A	Bushing, 6T40/6F35 Drive Sprocket Hub (.377”Wide)(.794”ID) 2008-Up	2	

© Whatever It Takes Transmission Parts. Inc.

46062C ..... Bushing, 6T30 Drive Sprocket Hub (.725”ID)(.812”OD) 2008-Up ..... 2 .....
46063A ..... Bushing, 6T40 Axle To Case (.625”Wide)(1.384”ID) 2008-Up ..... 1 .....
46063AK ..... Kit, Ford 6F35 Bushing & Seal Refill (For T-46063K)(Contains: [1] Teflon
..... Coated Bushing & [1] Premium Seal) 2014-Up (Thick Wall Bushing) ..... 1 .....
46063B ..... Bushing, 6F35 Axle To Case (.615”Wide)(1.378”ID) 2009-Up ..... 1 .....
46063K ..... Kit, Ford 6F35 Bushing & Seal Refill (For T-46063K)(Contains: [1] Teflon Coated Bushing &
..... [1] Premium Seal)(Thin Wall Bushing) ..... 1 .....
T-46063K ..... Kit, Ford 6F35 Case Bushing/Axle Seal SuperTuff Solution By Superior
..... (Contains: 3 Piece Tool Set, (5) Axle Seals & (5) SuperTuff Teflon Coated Bushings) ..... 1 .....
46064A ..... Bushing, 6T40 Bell Housing To Differential (.420”Wide)(2.552”ID) 2008-Up ..... 1 .....
46064B ..... Bushing, 6F35 Bell Housing To Differential (.450”Wide)(3.744”ID) 2009-Up ..... 1 .....

PART #	METAL CLAD SEALS	QTY	REFERENCE #

46070A ..... Seal, 6T30/6T40/6T45/6T50 Pump (.300”Thick)(2.556”OD)(1.560”ID)(W/Short Flange) 2006-13
..... (Fits Gen 1 & Gen 2) 1 24266675
..... (Pressed In) ..... 1 ..... 9L8Z-7A248-D
46070BA ..... Seal, 6F35 Pump (.418”Thick)(2.660”OD)(1.490”ID) Some 2013-Up (Held In By Snap Ring) ..... 1 .....
46070H ..... Seal, 6T40 (Generation 3)(Front)(.440”Thick)(2.905”OD)(1.850”ID)(W/Short Flange) 2012-Up .... 1 .....
46071A ..... Seal, 6T40/6F35 Input Shaft (In Stator, Rear)(.800”ID)(1.105”OD) 2008-Up ..... 1 ..... 9L8Z-7048-A
46071B ..... Seal, 6T40/6F35 Pump Stator To Input Shaft (.269”Thick)(1.100”OD) 2008-Up ..... 1 .....
46071C ..... Seal, 6T30 Input Shaft (In Stator, Rear)(.720”ID)(1.105”OD) 2008-Up ..... 1 .....
46072A ..... Seal, 6T30/6T40 Manual Shaft (With Flange)(.765”OD) 2008-Up ..... 1 .....
46072B ..... Seal, 6F35 Manual Shaft 2009-Up ..... 1 .....
46076A ..... Seal, 6T30/6T40 Axle (Bell Housing Side) (.410”Thick)(2.610”OD)(W/Boot) 2008-Up 1 24230682
46076B ..... Seal, 6F35 Axle (Bell Housing Side)(.546”Thick)(2.833”OD)(W/Out Boot) 2009-Some 2013-Up... 1 ..... 9L8Z-1177-BA
46076BA ..... Seal, 6F35 Axle (Bell Housing Side)(AWD)(2.845”OD)(.325”Thick) 2009-Some 2013-Up ..... 1 ..... 9L8Z-1177-A
46076BB ..... Seal, 6F35 Axle (Bell Housing Side)(2.835”OD)(1.65”ID)(.550”Thick) Some 2013-Up ..... 1 .....
46077A ..... Seal, 6T40 Axle (Case Side) (2.400”OD)(W/Boot) 2008-Up (Can Use 46077B) ..... 1 .....
46077B ..... Seal, 6F35 Axle (Case Side) (2.400”OD)(W/Out Boot) 2009-Up (Also Fits
..... 6T30/6T40/6T45/6T50 2008-Up)(Also Fits 6T45/6T50 (AWD) Bell Housing Seal) ..... 1-3 ..... 9L8Z-1177-A
46079H ..... Seal, 6T40 (Generation 3) Stator To Input Shaft (1.110”OD)(.795”ID)(.207”Thick) 2012-Up ..... 1 .....
46080H ..... Seal, 6T40 (Generation 3) Pump Shaft To Pump Plate (Bonded Rubber)(Cast # 24262245)
..... 2012-Up ..... 1 .....
46081B ..... Seal, 6F35 Transfer Case 2009-Up ..... 1 .....

PART #	FRICTIONS	QTY	REFERENCE #

46100A ..... Friction, 6T40 2-6 Clutch (.058”)(36 Teeth) (8 9/16”OD)(Smooth) 2008-Up
..... (Also Fits 6T40 1-2-3-4 Clutch # 104 2008-Up) 2-4 24248898
46100AA ..... Friction, 6T40/6T45 (Generation 2 & 3) 2-6 Clu 2012-Up ..... 2-4 .....
46100AB ..... Friction, 6T40 (Generation 2) 2-6 Clu (48 Radial Grooves) 2014-Up ..... 2-4 .....
46100B ..... Friction, 6F35 2-6 Clutch (.073”)(36 Teeth)(8 9/16”OD)(Grooved) 2009-Some 13
..... (Also Fits 6F35 1-2-3-4 Clutch # 104 2009-Up) ..... 2-4 ..... 9L8Z-7B164B
46100BA ..... Friction, 6F35 2-6 Clutch Some 2013-Up ..... 2 .....
46100C ..... Friction, 6T30 2-6 Clutch (Waved)(.065”Thick)(30 Teeth)(7 3/4”OD) 2008-Up ..... 2 .....
46100CA ..... Friction, 6T30 2-6 Clutch (Generation 2 & 3)(Waved) 2012-Up ..... 2 .....
46104A ..... Use 46100A ..... 1 .....
46104AA ..... Friction, 6T40/6T45 (Generation 2 & 3) 1-2-3-4 Clu (Waved) 2012-Up ..... 1 .....
46104B ..... Use 46100B ..... 1 .....
46104BA ..... Friction, 6F35 1-2-3-4 Clutch Some 2013-Up ..... 2 .....
46104C ..... Friction, 6T30 1-2-3-4 Clutch (7 5/8”OD)(36 Teeth)(.060”Thick) 2008-11 ..... 2 .....
46104CA ..... Friction, 6T30 1-2-3-4 Clutch (Generation 2 & 3)(Waved) 2012-Up ..... 2 .....
46106A ..... Friction, 6T40 3-5 Reverse Clutch (.063”)(36 Outer Teeth)(5.710”ID)(Smooth) 2008-Up 3 24247997
46106AA ..... Friction, 6T40/6T45 (Generation 2 & 3) 3-5-Reverse Clutch 2012-Up ..... 3 .....
46106B ..... Friction, 6F35 3-5 Reverse Clutch (.063”)(36 Outer Teeth)(5.710”ID)(Grooved) 2009-Some 13.... 3 ..... 9L8Z-7B164C
46106BA ..... Friction, 6F35 3-5 Reverse Clutch Some 2013-Up ..... 3 .....
46106C ..... Friction, 6T30 3-5 Reverse Clutch (Waved)(.062”) 2012-Up ..... 3 .....
46106CA ..... Friction, 6T30 3-5-Reverse Clutch (Generation 2 & 3)(Waved) 2012-Up ..... 3 .....
46108A ..... Friction, 6F35/6T40 4-5-6 Clutch (.063”)(24 Teeth)(4.800”OD) 2008-Up 4-5 24230754
46108AA ..... Friction, 6T40/6T45 (Generation 2 & 3) 4-5-6 Clu 2012-Up ..... 4 .....
46108BA ..... Friction, 6F35 4-5-6 Clutch Some 2013-Up ..... 5 .....
46108C ..... Friction, 6T30 4-5-6 Clutch (.062”)(24 Teeth)(4.334”OD)(Waved) 2012-Up 5 24230754
46108CA ..... Friction, 6T30 4-5-6 Clutch (Generation 2 & 3)(Waved) 2012-Up ..... 5 .....
46114A ..... Friction, 6T40 Low/Reverse Clutch (.065”) (48 Teeth)(8 1/2”OD)(W/Grooves) 2008-Up 3 24232157
46114AA ..... Friction, 6T40/6T45 (Generation 2 & 3) 2012-Up ..... 3 .....
46114B ..... Friction, 6F35 Low/Reverse Clutch (.061”)(48 Teeth)(8 9/16”OD)(W/Segments) 2009-Some 13... 3 ..... 9L8Z-7B164A
46114BA ..... Friction, 6F35 Low/Reverse Clutch Some 2013-Up ..... 3 .....
46114C ..... Friction, 6T30 Low/Reverse Clutch (.065”Thick)(48 Teeth)(7 9/16”OD) 2008-Up ..... 3 .....
46114CA ..... Friction, 6T30 Low/Reverse Clutch (Generation 2)(Waved) 2012-14 ..... 3 .....

© Whatever It Takes Transmission Parts. Inc.

PART #	Frictions (Continued)	QTY	REFERENCE #
46114CB	Friction, 6T30 Low/Reverse Clutch (Generation 3)(Waved) 2015-Up	3	
46119A	Friction Module, 6T40/Hybrid/6T45 2008-Up (Also Fits 6T50)	1	
46119AB	Friction Module, 6T40/Hybrid/6T45/6T50 (Generation 2) 2012-15	1	
46119AC	Friction Module, 6T40/Hybrid/6T45/6T50 (Generation 3) 2015-Up	1	
46119B	Friction Module, 6F35 2009-Some 13 Up (For Pressed In Seal)	1	
46119BA	Friction Module, 6F35 Some 2013-Up (Goes With Snap RIng Held Seal)	1	
46119C	Friction Module, 6T30 (Generation 1) 2008-11	1	
46119CA	Friction Module, 6T30 (Generation 2) 2012-14	1	
46119CB	Friction Module, 6T30 (Generation 3) 2015-Up	1	

PART #	STEELS	QTY	REFERENCE #
46120A	Steel, 6T40 2-6 Clutch (.114") (15 Teeth)(7 3/8"ID) 2008-Up	2	24230731
46120B	Steel, 6F35 2-6 Clutch (.132") (15 Teeth)(7 3/8"ID) 2009-Up	2	9L8Z-7B442-B
46120C	Steel, 6T30 2-6 Clutch (.097"Thick)(15 Teeth)(6 12/16"ID) 2008-Up	2	
46124A	Steel, 6T40 1-2-3-4 Clutch (.067") (11 Teeth W/Half Moon Notches)(7 3/8"ID) 2008-Up	2	24231263
46124B	Steel, 6F35 1-2-3-4 Clutch (.067") (12 Teeth W/Half Moon Notches)(7 3/8"ID) 2009-Up	2	9L8Z-7B442-A
46124C	Steel, 6T30 1-2-3-4 Clutch (.067")(11 Teeth)(6 3/4"ID) 2008-Up	2	
46125A	Steel, 6T40 1-2-3-4 Clutch (.035") (4 Teeth W/Half Moon Notches)(7 1/2"ID)(Waved) 2008-Up	2	24230818
46125B	Steel, 6F35 1-2-3-4 Clutch (.035") (4 Teeth W/Half Moon Notches & 1 Square Tooth)(7 1/2"ID) (Waved) 2009-Up	2	9L8Z-7B070-B
46125C	Steel, 6T30 1-2-3-4 Clutch (.043"Thick)(14 Teeth)(6 3/4"ID)(Waved) 2008-Up	2	
46126A	Steel, 6T40 3-5 Reverse Clutch (.114") (36 Internal Teeth)(6 3/4"OD) 2008-Up	3	24230758
46126B	Steel, 6F35 3-5 Reverse Clutch (.133") (24 Internal Teeth)(6 3/4"OD) 2009-Up	3	9L8Z-7B442-D
46126C	Steel, 6T30 3-5 Reverse Cluthc (.098"Thick)(36 Teeth)(6.162"OD) 2008-Up	3	
46127A	Steel, 6T40 3-5 Reverse Clutch (.035") (36 Internal Teeth)(Wavy) 2008-Up	3	24230757
46127AR	Drum Fix Kit, 6T40 4-5-6 Clutch (Fixes Damage On The 3-5 Side Of The Drum When The #127 Wavy Steel Breaks And Damages The Splines)(Contains Repair Plate And Wavy Steel)	1	
46127B	Steel, 6F35 3-5 Reverse Clutch (.035") (24 Internal Teeth)(6 3/4"OD)(Wavy) 2009-Up	3	9L8Z-7B070-E
46127BR	Drum Saver, 6T30/6T35 4-5-6 Clutch & 3rd (Please Read Instruction Of When To Use It)	1	
46127C	Steel, 6T30 3-5 Reverse Clutch (.035")(36 Teeth)(6.143"OD)(Waved) 2008-Up	1	
46128A	Steel, 6T40 4-5-6 Clutch (.067") (36 Teeth)(3.780"ID) 2008-Up	3	24231255
46128B	Steel, 6F35 4-5-6 Clutch (.067") (24 Teeth)(3.777"ID) 2009-Up	5	9L8Z-7B442-E
46128C	Steel, 6T30 4-5-6 Clutch (.070"Thick)(36 Teeth)(3.602"ID) 2008-Up	5	
46129A	Steel, 6T30/6T40/6T45/6T50 4-5-6 Clutch (.051") (36 Teeth)(3.860"ID)(Waved) 2008-Up	3	24230753
46134A	Steel, 6T40 Low/Reverse Clutch (.067") (12 Teeth W/Half Moon Notches) (7 9/16"ID) 2008-Up	3	24231258
46134B	Steel, 6F35 Low/Reverse Clutch (.067") (12 Teeth With V Notches)(7 9/16") 2009-Up	3	9L8Z-7B442-C
46134C	Steel, 6T30 Low/Reverse Clutch (.068")(11 Teeth)(6 3/4"ID) 2008-Up	3	
46135A	Steel, 6T40 Low/Reverse Clutch (.075") (4 Teeth W/Half Moon Notches)(7 3/4"ID) (Waved) 2008-Up	3	24230812
46135B	Steel, 6F35 Low/Reverse Clutch (.038") (5 Teeth W/V Notches)(7 9/16"ID)(Waved) 2009-Up	3	9L8Z-7E085-B
46135C	Steel, 6T30 Low/Reverse Clutch (6 3/4"ID)(14 Teeth)(Waved) 2008-Up	1	
46139A	Steel Module, 6T40/6T45 2008-Up	1	
46139B	Steel Module, 6F35 2009-Up (Early & Late)	1	
46139C	Steel Module, 6T30 2012-Up	1	

PART #	PRESSURE PLATES	QTY	REFERENCE #
46144A	Pressure Plate, 6T40/6F35 1-2-3-4 Clutch (.315")(18 Teeth W/Half Moon Notches) (7 3/8"ID) 2008-Up	1	9L8Z-7B066-D
46144C	Pressure Plate, 6T30 1-2-3-4 Clutch (.310"Thick)(19 Teeth)(6.721"ID) 2008-Up	1	
46146	Pressure Plate, 6T40 3-5 Reverse Clutch (5.573"ID)(36 Internal Teeth)(.121"Thick)(1st Design) 2008-09	1	
46146A	Pressure Plate, 6T40 3-5 Reverse Clutch (.121")(36 Internal Teeth)(6 3/4"OD) 2008-Up	1	24230760
46146B	Pressure Plate, 6F35 3-5 Reverse Clutch (.137")(24 Internal Teeth)(6 3/4"OD) 2009-Up	1	
46146C	Pressure Plate, 6T30 3-5 Reverse Clutch (.271"Thick)(36 Teeth)(6.168"OD) 2008-Up	1	
46148A	Pressure Plate, 6T40 4-5-6 Clutch (.120") (36 Teeth)(3.782"ID) 2008-Up	1	24230755
46148B	Pressure Plate, 6F35 4-5-6 Clutch (.103") (24 Teeth)(3.779"ID) 2009-Up	1	9L8Z-7B066-C
46148C	Pressure Plate, 6T30 4-5-6 Clutch (.120"/.248"Thick)(3.576"ID) 2008-Up	1	
46149A	Apply Plate, 6T40 4-5-6 Clutch (.114")(36 Teeth)(3.782"ID) 2008-Up	1	24233864
46154A	Pressure Plate, 6T40 Low/Reverse Clutch (.216")(12 Teeth)(7 9/16"ID) 2008-Up	1	24232635
46154AA	Pressure Plate, 6T40Low/Reverse (.215")(12 Teeth)(7 9/16"ID) 2008-Up	1	
46154B	Pressure Plate, 6F35 Low/Reverse Clutch (.205")(12 Teeth)(7 9/16"ID) 2009-Up	1	9L8Z-7B066-A
46154C	Pressure Plate, 6T30 Low/Reverse Clutch (.298"Thick)(11 Teeth)(6 7/8"OD) 2008-Up	1	

© Whatever It Takes Transmission Parts. Inc.

PART #	VALVE BODY KITS	QTY	REFERENCE #
T46165A	Shift Kit, 6T40 (Generation 1 Only) 2008-11	1	
T46165AB	Shift Kit, 6T40 (Generation 2 Only)(TEHCM No PS) Drop-In 2012-14	1	
T-AFL-G2-TK	Tool Kit, AFL Reamer And Guide (Must Use With T46165AB & T46165 BA)	1	
T46165B	Shift Kit, 6F35 2009-Up (Transgo)	1	
T46165BA	Shift Kit, 6F35 Generation 2 units (Must use w/AFL-G2-TK)(Drop-in) 2013.5-Up (TransGo)	1	

PART #	OIL SEALING RINGS	QTY	REFERENCE #
46175AT	Ring Kit, 6F35/6T30/6T40/6T45/6T50 2008-Up	1	
46178HT	Ring, 6T40 (Generation 3) Stator To Torq Converter (1.650"OD)(.079"Thick)(Teflon) 2012-Up	1	
25179A	Ring, 6T40/6T40/6F35 3-5 Reverse & 4-5-6 Clutch (.093"Thick)(1.835"OD) 2008-Up	4	
46179CT	Ring, 6T30 3-5 Reverse & 4-5-6 Clutch Ring Tower (.096"Thick)(1.756"OD) 2008-Up	3	

PART #	WASHERS & BEARINGS	QTY	REFERENCE #
46205H	Washer, 6T40 (Generation 3)Seal Retainer To Drive Sprocket 1 Outer Tab (.078"Thick)(2.325"OD) (1.968"ID) 2012-Up	1	
46210H	Washer, 6T40 (Generation 3) Drive Sprocket To Pump Plate (Can Use Use U46205H) 2012-Up	1	
46211A	Washer, 6T40 Stator To Drive Sprocket (Black Plastic W/5Tabs)(4.044"OD) 2008-Up	1	24234072
46211B	Washer, 6F35 Stator To Drive Sprocket (Black Plastic W/3Tabs)(Cast # 9L8P-7G099-BA) 2009-Up	1	9L8Z-7G099-A
46211H	Ball Bearing, 6T40 (Generation 3) Pump Input Shaft To Stator (11 Balls)(1.180"OD)(.270"Thick) (Cast # 6903X2C4) 2012-Up	1	
46232A	Bearing W/Races, 6T40/6F35 4-5-6 Clutch Drum To Case (.149"Thick)(2.960"OD) (2.315"ID) 2008-Up	1	24231205
46232C	Bearing W/Races, 6T30 4-5-6 Clutch To Case (.150"Thick)(2.962"OD)(2.301"ID) 2008-Up	1	
46233A	Bearing W/Races, 6T40 Input Planet To Reaction Planet (.115"Thick)(2.610"OD) (2.072"ID)(W/Inner Shoulder) 2008-Up	1	24230782
46233B	Bearing W/Races, 6F35 Input Planet To Reaction Planet (.119"Thick)(2.602"OD)(2.078"ID) (No Inner Shoulder) 2009-Up	1	9L8Z-7G177-A
46233C	Bearing W/Races, 6T30 Input Planet To Reaction Planet (.118"Thick)(2.466"OD)(1.913"ID) 2008-Up	1	
46234A	Bearing W/Races, 6T40 Input Sun Gear To Reaction Planet (.137")(2.055"OD)(1.409"ID) 2008-Up	1	
46234B	Bearing W/Races, 6F35 Input Sun Gear To Reaction Planet (.157"Thick)(2.021"OD)(1.344"ID) 2009-Up	1	9L8Z-7C096-D
46234C	Bearing W/Races, 6T30 Input Sun Gear To Reaction Planet (.144"Thick)(1.840"OD)(1.256"ID) 2008-Up	1	
46235A	Bearing W/Races, 6T40 4-5-6 Clutch Hub To 4-5-6 Clutch Drum (.149"Thick)(1.959"OD) (1.257"ID) 2008-Up (Also Fits 6T40 4-5-6 Clutch Hub To Reaction Sun Gear # 236)	1-2	24230762
46235B	Bearing W/Races, 6F35 4-5-6 Clutch Hub To 4-5-6 Clutch Drum (.151"Thick)(1.964"OD) (1.266"ID) 2009-Up (Also Fits 6F35 4-5-6 Clu Hub To Reaction Sun Gear # 236)	1-2	9L8Z-7F242-A
46235C	Bearing W/Races, 6T30 4-5-6 Clu Hub To 4-5-6 Clu Drum (.135"Thick)(1.807"OD) 2008-Up (Can Use For U46236C)	1	
46236A	Use U46235A	1	
46236B	Use U46235B	1	
46236C	Use U46235C		
46238A	Bearing W/Races, 6T40 Output Planet To Input Planet (.137"Thick)(4.166"OD)(3.353"ID) 2008-Up	1	24230795
46238B	Bearing W/Races, 6F35 Output Planet To Input Planet (.137"Thick)(4.244"OD)(3.445"ID) 2009-Up	1	9L8Z-7C096-A
46238C	Bearing W/Races, 6T30 Output Planet To Input Planet (.135"Thick)(3.755"OD) 2008-Up	1	
46241A	Bearing W/Races, 6T40 Output Planet To Input Sun Gear (.260"Thick W/Shoulder) (1.581"ID) 2008-Up	1	
46241B	Bearing W/Races, 6F35 Output Planet To Input Sun Gear (.210"Thick W/Shoulder)(1.581"ID) 2009-Up	1	9L8Z-7C096-B
46241C	Bearing W/Races, 6T30 Output Planet To Input Sun Gear (.206"Thick)(2.150"OD) 2008-Up	1	
46246H	Race, 6T40 (Generation 3) Differential To Sungear (2.008"OD)(1.130"ID)(.180Thick) 2012-Up	1	
46247H	Bearing, 6T40 Hybrid Differential To Sun Gear (.134"/.261"Thick)(1.890"OD) 2012-Up	1	
46251A	Bearing W/Races, 6T40 Drive Sprocket Hub To Output Sun Gear (.154"Thick)(2.018"OD) (1.382"ID) 2008-Up	1	24237665
46251B	Bearing W/Races, 6F35 Drive Sprocket Hub To Output Sun Gear (.138"Thick)(2.021"OD) (1.430"ID) 2009-Up	1	9L8Z-7D234-A
46251C	Bearing W/Races, 6T30 Drive Sprocket Hub To Output Sun Gear (.129"/.243"Thick) (1.840"OD)(1.221"ID) 2008-Up	1	
46260A	Bearing W/Races, 6T40 Stator To Drive Sprocket Hub (.148"Thick)(1.958"OD)(1.256"ID) 2008-Up	1	24230762

© Whatever It Takes Transmission Parts. Inc.

PART #	WASHERS & BEARINGS (Continued)	QTY	REFERENCE #
46260B	Bearing W/Races, 6F35 Stator To Drive Sprocket Hub (.150"Thick)(1.964"OD)(1.266"ID) 2009-Up	1	9L8Z-7D234-B
46263A	Brearing W/Races, 6T40 Driven Sprocket To Case (.193"Thick)(2.628"OD) (1.575"ID) 2008-Up	1	24237523
46263B	Brearing W/Races, 6F35 Driven Sprocket To Case (.190"Thick)(2.628"OD)(1.613"ID) 2009-Up	1	9L8Z-7G355-A
46263C	Bearing W/Races, 6T30 Driven Sprocket To Case (.306"Thick)(2.630"OD) 2008-Up	1	
46281A	Ball Bearing, 6T40/6F35 Driven Sprocket (Inner)(.746"Thick)(4.131"OD)(2.755"ID) (Cast # F-845910) 2008-Up	1	
46281C	Ball Bearing, 6T30 Driven Sprocket (Inner)(2.710"ID)(13 Balls) 2008-Up	1	
46293A	Bearing W/Races, 6T40 Bell Housing To Differential (.300"Thick W/Shoulder)(4.798"OD) (4.113"ID) 2008-Up	1	
46293B	Bearing W/Races, 6F35 Bell Housing To Differential (.150"Thick)(2.806"OD)(2.174"ID) 2009-Up	1	9L8Z-7G112-A
46293C	Bearing W/Races, 6T30 Bell Housing To Differential (.201"Thick)(4.549"OD)(3.917"ID) 2008-Up	1	
46298A	Caged Needle Bearing, 6T40 Drive Sprocket Hub (.970"Wide)(3.010"OD) (Cast # 24231457) 2008-Up	1	
46298AB	Caged Needle Bearing, 6T40 Drive Sprocket Hub (2.945"OD)(.715"Wide)(INA) (Cast # 242291850,F-55339-01)	1	
46298B	Caged Needle Bearing, 6F35 Drive Sprocket Hub (.975"Wide)(3.010"OD)(Cast # F-39344Z02) 2009-Up	1	
46298C	Caged Needle Bearing, 6T30 Drive Sprocket Hub (2.945"OD)(.475"Wide)(Cast # F-557439.01) 2008-Up	1	

PART #	GASKETS AND RUBBER COMPONENTS	QTY	REFERENCE #
46301AW	Gasket, 6T40/6T45 Side Pan (Molded Rubber) 2008-Up	1	24234281
46301BW	Gasket, 6F35 Side Pan (15 Holes)(2 Dowel Pin Holes & 13 Pan Bolt Holes) 2009-Some 13	1	
46301BAW	Gasket, 6F35 Side Pan (Molded Rubber) Some 2013-Up	1	
46311A	Seal, 6T30/6T40/6T45 Pump To Converter Housing 2008-Up (Also Fits 6F35 2009-Up)	1	24231187
46311H	Seal, 6T40 (Generation 3) Pump To Converter Housing (2.905"ID)(3.385"OD) 2012-Up	1	
46313H	Gasket, 6T40 (Generation 3) Pump Housing To Converter Reactor (5 Bolt Holes)(1 Oval Hole) (2 Dial Pins) 2012-Up	1	
46315H	Gasket, 6T40 (Generation 3) Stator To Pump Cover (2.265"OD)(.560"ID)(3 Round Holes/3 Slots) 2012-Up	1	
46318A	Gasket, 6T40 Bell Housing To Case (15 Bolt)(Metal W/Bonded Rubber) 2008-Up	1	24231188
46318CW	Gasket, 6T30 Bell Housing To Case (16 Holes)(Metal W/Bonded Rubber) 2008-Up	1	24231613
S46376AK	Pressure Switch Fix, 6T40/6T45/6T50 (Generation1) Fixes Leakes On Solenoids 2008-Up	1	
46382-1H	O-Ring, 6T40 (Generation 3) External Pump To Bell Housing (.660"OD)(.102"Thick) 2012-Up	1	
46382H	O-Ring, 6T40 (Generation 3) External Pump To Bell Housing (1.010"OD)(.230"Thick) 2012-Up	1	
46391H	Washer, 6T40 (Generation 3) External Pump To Line & Line To Case (.625"OD)(.345"ID) (.100"Thick) 2012-Up	2	

PART #	TECHNICAL MANUALS	QTY	REFERENCE #
46400A	Technical Manual, 6T40/6T30/6T45/6T50 (ATSG)	1	
46400B	Technical Manual, 6F35 (Generation 1 & 2)	1	

PART #	ELECTRICAL COMPONENTS	QTY	REFERENCE #
46410A	Switch, 6T40 Neutral Safety W/Rooster Comb (W/6 Wire Harness)(W/6 Prong Female Connector)(Cast # 24230719) 2008-Up	1	24230719
46410B	Switch, 6F35 Neutral Safety W/Rooster Comb (W/3 Prong Connector)(Cast # C1080) 2009-Up	1	9L8Z-7H557-A
46420A	Solenoid Assembly, 6T40/6T45 (7 Solenoid) (14 Pin Connector)(Cast # 24252871 On Metal Plate) 2008-Up (These Must Be Flashed)(THESE ITEMS NEED TO BE VERIFIED BY THE VIN NUMBER!!)	1	24256524
46420AA	Solenoid Assembly, 6T40/6T45 (7 Solenoids)(14 Pin Connector)(Cast # 24256523 On Metal Plate) 2008-10 (These Must Be Flashed)(THESE ITEMS NEED TO BE VERIFIED BY THE VIN NUMBER!!)	1	24256523
46420AB	Solenoid Assembly, 6T30/6T40/6T45/6T50 (7 Solenoid) 2012-14 (These Must Be Flashed)(THESE ITEMS NEED TO BE VERIFIED BY THE VIN NUMBER!!)	1	24265367
46420AC	Solenoid Assembly, 6T30/6T40/6T45/6T50 2014 (RPO Codes: MH7/MH8/MH9/MHB/MHH/MHK) (These Must Be Flashed) (THESE ITEMS NEED TO BE VERIFIED BY THE VIN NUMBER!!)	1	24267723
46420AD	Solenoid Assembly, 6T30/6T40/6T45/6T50 2014 (RPO Codes: MH7/MNH)(These Must Be Flashed)(THESE ITEMS NEED TO BE VERIFIED BY THE VIN NUMBER!!)	1	24267724
46420B	Solenoid Assembly, 6F35 (7 Solenoid In Top Aluminum Housing Of Valve Body) (Cast #9L8P-7A092-CA) 2009-Some 13 (Goes With Pressed In Seal)	1	9L8P-7G391-A
46420BA	Solenoid Assembly, 6F35 Some 2013-Up (Goes With Snap Ring Held Seal)	1	

FORD

© Whatever It Takes Transmission Parts. Inc.

46436A	Sensor, 6T30/6T40 OSS (W/2 Wire Harness W/2 Prong Female Connector) 2008-Up	1	24259852
46436B	Sensor, 6F35 OSS (W/3 Wire Harness W/4 Prong Female Connector) 2009-Up	1	9L8Z-7H103-A
46436C	Sensor, 6T30 OSS (Output Speed) 2009-Up	1	24259852
46438A	Sensor, 6T40 ISS (W/2 Wire Harness W/2 Prong Female Connector) 2008-Up (Use D46438C)	1	
46438B	Sensor, 6F35 ISS (W/3 Prong Connector)(Cast # 279101472) 2009-Up	1	9L8Z-7M101-B
46438C	Sensor, 6T30 ISS (Input Speed)(With 2 Wire Harness W/2 Prong Female Connector) 2009-Up (Also Fits 6T40 2008-Up)	1	24245045
46446B	Circuit Board, 6F35 (14 Pin Connector)(Cast # 9L8P-7G276-CA On Back Side) 2009-Up	1	9L8P-7G276-A
46467H	External Accumulator, 6T40 (Generation 3) 12 Volt Bolts On Top Of Case (3 Bolts) 2012-Up	1	

PART #	PUMP COMPONENTS	QTY	REFERENCE #
46479A	Valve, 6T40 Fluid Level Control (Black Plastic)(Goes Beside Valve Body) 2008-Up	1	24243351
46480H	Ball & Capsule, 6T40 (Generation 3) Case Under Pump Gasket (.725"Long)(.550"OD) 2012-Up	1	
46494A	Fill Cap, 6T30/6T40 (Top Of Case)(Black) 2008-Up	1	
46507-5H	Check Ball, 6T40 (Generation 3) Pump Plate To Stator (Steel)(.373"OD) 2012-Up	1	
S46507AAPK	Valve Kit, 6T30 & (Gen 2) 6T40/6T45/6T50 Pressure Regulator (Oversized)(Valve, Spring & End Plug)(Requires T-F-144510-TL12C Sold Seperately)		
S46507ACAK	Valve Kit, 6T40/6T45/6T50 TCC Control (Oversize)(Contains: Valve & Spring)(Sonnax) (Must Use T-F-144510-TL5C)	1	
T-F-144510-TL5C	Tool For S46507ACAK	1	
S46507APK	Valve Kit, 6T40/6T45/6T50 (Gen 1) Pressure Regulator (Oversized) (Requires T-F-144540-TLC)	1	
T-F-144510-TLC	Tool For S46507APK	1	
S46507BCAK	Valve Kit, 6F35 TCC (Oversized)(Contains: Valve & Spring)(Sonnax) (Must Use T-F-144510-TL7C)	1	
T-F-144510-TL7C	Tool For S46507BCAK	1	
S46507BPK-1	Valve Kit, 6F35 (Gen 1&2) Pressure Regulator (Oversized) (Contains: Valve, Spring & End Plug)	1	

PART #	HARDPARTS	QTY	REFERENCE #
46510A	Pump Body, 6T40 W/Gears (Aluminum) (Cast # 24245547 On Front) 2008-Up	1	
46510B	Pump Body, 6F35 W/Gears (Aluminum) (Cast # 7A103 EXXDA On Front)(23 Threaded Holes) 2009-Some 13	1	
46510BA	Pump Body, 6F35 W/Gears (Aluminum)(Cast # 7A105)(22 Threaded Holes) Some 2013-Up	1	
46510C	Pump Body, 6T30 W/Gears (Aluminum)(Less Spring Tention)(Cast 12111069) 2008-Up	1	
46510H	Pump Body 6T40 Hybrid (5 Bolt Aluminum)(.985"ID Filter Neck Hole) 2012-Up	1	
46520A	Stator, 6T40 (Cast Iron)(No Cast #)(.802" Tall) 2008-Up(*Measure From Flat Edge At Rear Of Stator To Washer Area)	1	
46520AA	Stator, 6T40 (Cast Iron)(No Cast #)(1.030" Tall) 2008-Up(*Measure From Flat Edge At Rear Of Stator To Washer Area)	1	
46520AB	Stator, 6T40 (Cast Iron)(No Cast #)(1.278" Tall) 2008-Up(*Measure From Flat Edge At Rear Of Stator To Washer Area)	1	
46520B	Stator, 6F35 (Cast Iron) (Cast # EXXDA)(1.147" Tall)(8 Bolts To Bell Housing)(37 Holes On Rear Of Stator)(Fits B Body)2009-Some 13 (*Measure From Flat Edge At Rear Of Stator To Washer Area)	1	
46520BA	Stator, 6F35 Cast Iron (1.147"Tall)(7 Bolts To Bell Housing)(35 Holes On Rear Of Stator)(Fits BA Body) Some 13-Up (*Measure From Flat Edge At Rear Of Stator To Washer Area)	1	
46520C	Stator, 6T30 (Cast Iron)(.770"Tall)(.720"ID) 2008-Up(*Measure From Flat Edge At Rear Of Stator To Washer Area)	1	
46520H	Stator, 6T40 (Generation 3) (Cast Iron)(2.785"Stator Tub Length)(42 Splines) 2012-Up(*Measure From Flat Edge At Rear Of Stator To Washer Area)	1	
46525H	Pump Drive Chain, 6T40 (Generation 3) (41 Links)(.240 Thick At Pins) 2012-Up	1	
46526H	Drive Sprocket, 6T40 (Generation 3)(2 Converter Flats)(35 Teeth)(.575 Thick)(1.905"OD) 2012-Up	1	
46527H	Gear, 6T40 (Generation 3) Driven Pump (.200"/.425"Thick)(35 Teeth) 2012-Up	1	
46528H	Cover, 6T40 (Generation 3) Pump (2.520"OD)(.660"ID)(.320"Thick) 2012-Up	1	
46530A	Pump Gear Set, 6T40/Hybrid (.497"Thick) (9 Teeth On Inner Gear)(11 Teeth On Outer Gear) (W/2 Flats For Convertor Hub) 2008-Up	1	
46530B	Pump Gear Set, 6F35 (.496"Thick) (7 Teeth On Inner Gear)(8 Teeth On Outer Gear)(W/2 Flats For Convertor Hub) 2009-Up	1	
46532H	Rotor, 6T40 (Generation 3) Pump (12 Vane)(15 Splines)(.706"Thick)(1.597"OD) 2012-Up	1	
46533H	Vane, 6T40 (Generation 3) Pump Rotor (.707"Length)(.047"Thick)(.340"Wide) 2012-Up	12	
46534H	Slide, 6T40 (Generation 3) Pump (Outer)(.704"Thick)(2.436"OD) 2012-Up	1	
46544H	Plate, 6T40 (Generation 3) Pump Plate To Stator (Bonded)(#2730)(41 Round Holes) 2012-Up	1	
46550A	Drum, 6T40 4-5-6 Clutch (Aluminum)(4 Clutch)(36 Outer Lugs For 3-5 Reverse Clutch) (With No O-Ring Groove Inside For The 4-5-6 Clutch Piston)(Piston #964 Has 2 Outer O-Ring Grooves)(1st Design) 2008-11 (Use 46550AA)	1	24230736

© Whatever It Takes Transmission Parts. Inc.

PART #	HARDPARTS (Continued)	QTY	REFERENCE #
46550AA	Drum, 6T40 4-5-6 Clutch (Aluminum)(4 Clutch)(36 Outer Lugs For 3-5 Reverse Clutch) (With No O-Ring Groove Inside For The 4-5-6 Clutch Piston)(Piston #964 Has 2 Outer O-Ring Groove)(2nd Design) 2012-16	1	
46550AAK	Drum Kit, 6T40/6T45/6T50 4-5-6 Clutch (4 Clutch)(36 Outer Lugs For 3-4 Reverse Clutch) 2010-Up (2nd Design Updated)(Will Retro Fit To 2008)(Contains: Updated Drum, Backing Plate & Snap Ring)	1	.24255992
46550AB	Drum, 6T40 4-5-6 Clutch (Aluminum)(4 Clutch)(36 Outer Lugs For 3-5 Reverse Clutch) (With 1 O-Ring Groove Inside For The 4-5-6 Clutch Piston)(Piston #964 Has 1 Outer O-Ring Groove) 2012-Up	1	.24263527
46550B	Drum, 6F35 4-5-6 Clutch (Aluminum)(5 Clutch)(24 Outer Lugs For 3-5 Reverse Clutch) 2009-Up	1	.9L8Z-7G384-A
46550C	Drum, 6T30 4-5-6 Clutch (Aluminum)(36 Outer Lugs)(4 Clutch)(No O-RIng Groove Inside)(Piston 964 Has 2 O-Ring Groove) 2009-12 (1st Design)	1	.24263508
46550CA	Drum, 6T30 4-5-6 Clutch (Aluminum)(36 Outer Lugs)(4 Clutch)(1 O-Ring Groove Inside)(Piston 964 Has 1 O-Ring Groove) 2012-Up (2nd Design)	1	
46127AR	Drum Fix Kit, 6T40 4-5-6 Clutch (Fixes Damage On The 3-5 Side Of The Drum When The #127 Wavy Steel Breaks And Damages The Splines)(Contains Repair Plate And Wavy Steel)	1	
46558A	Housing, 6T40 Low/Reverse & 1-2-3-4 Clutch (Aluminum)(Cast # CH6-A Under Low/Reverse Clutch Piston) 2008-Up	1	
46558B	Housing, 6F35 Low/Reverse & 1-2-3-4 Clutch (Aluminum)(Cast # 9L8P-7G033 On Back Side) (2nd Design) 2009-Up	1	.9L8Z-7L328-A
46558C	Housing, 6T30 Low/Reverse & 1-2-3-4 Clutch (Aluminum)(Cast 24252568) 2008-Up	1	
46560A	Piston Kit, 6T40/Hybrid 2-6 Clutch (Bonded)(3 Pieces) 2008-Up	1	
46560B	Piston Kit, 6F35 2-6 Clutch (Bonded)(4 Pieces) 2009-Up	1	
46560C	Piston Kit, 6T30 2-6 Clutch (Bonded)(3 Pieces) 2008-Up	1	
46562A	Piston Kit, 6T40 1-2-3-4 Clutch (Bonded Piston Cast # 24230816) 2008-Up	1	
46562B	Piston Kit, 6F35 1-2-3-4 Clutch (Bonded Piston Cast #9L8P-7A262-AC) 2009-Up	1	
46564A	Piston Kit, 6T40 4-5-6 Clutch (Bonded)(4 Pieces) 2008-Up	1	
46564B	Piston Kit, 6F35 4-5-6 Clutch (Bonded)(4 Pieces) 2009-Up	1	
46564C	Piston Kit, 6T30 4-5-6 Clu (Bonded)(4 Pcs) 2008-Up	1	
46565A	Piston Kit, 6T40 3-5 Reverse Clutch (Bonded)(4 Pieces) 2008-Up	1	
46565B	Piston Kit, 6F35 3-5 Reverse Clutch (Bonded)(4 Pieces) 2009-Up	1	
46565C	Piston Kit, 6T30 3-5 Rev Clu (Bonded)(4 Pcs) 2008-Up	1	
46574A	Hub, 6T40 4-5-6 Clutch (24 Teeth Clutch Hub)(2.602” Overall Height) 2008-Up	1	.24230763
46574AK	Hub, 6T40 4-5-6 Clutch (24 Teeth Clutch Hub)(2.610” Overall Height)(Comes W/ Hub, Dam & Snap Rings) 2008-Up	1	.24230763
46574B	Hub, 6F35 4-5-6 Clutch (24 Teeth Clutch Hub)(2.729” Overall Height) 2009-Up	1	.9L8Z-7H351-A
46574C	Hub, 6T30 4-5-6 Clutch (24 Teeth)(3.493”OD)(2.498” Overall Height)(Cast 24252240) 2008-Up	1	
46574H	Hub, 6T40 (Generation 3) 4-5-6 Clutch (24 Teeth Clutch Hub)(2.692” Overall Height) 2012-Up	1	.24230763
46576A	Piston Kit, 6T40 Low/Reverse Clutch (Bonded Piston Is .450”Thick On Outer Edge) 2008-Up	1	
46576B	Piston Kit, 6F35 Low/Reverse Clutch (Bonded Piston Is .415”Thick On Outer Edge) 2009-Up	1	
46582A	Planet, 6T40 Input (5 Gear) (Uses 41 Teeth, 1 Groove Sun Gear)(1.339” Overall Thickness) 2008-Up	1	.24233630
46582AB	Planet, 6T40 Input (4 Gear)(Uses 41 Teeth , 1 Groove Sun Gear) (1.339” Overall Thickness) 2008-Up	1	.24250885
46582B	Planet, 6F35 Input (5 Gear) (Uses 41 Teeth, No Groove Sun Gear)(1.409” Overall Thickness) 2009-Up	1	.9L8Z-7D491-B
46582C	Planet, 6T30 Input (4 Gear)(Usese 39 Teeth, 2 Groove Sun Gear)(1.294”Overall Thickness) 2008-Up	1	
46583A	Planet Kit, 6T40 2008-Up (Includes: 626A, 584A, 596A, 594A, 582A, 612A, 592A, 586A, 624A)(Can Use 46583AA & 46583AB)	1	
46583AA	Planet Kit, 6T40 2008-Up (Includes: 626A, 584AB, 596A, 594A, 582AB, 612A, 592A, 586AA,624A)(Can Use 46583A & 46583AB)	1	
46583AB	Planet Kit, 6T40 2008-Up (Includes: 626A, 584A, 596A, 594A, 582A, 612A, 592A, 586AA,624A)(Can USe 46583A & 46583AA)	1	
46583B	Planet Kit, 6F35 2009-Up (Includes: 626B, 584B, 596B, 594B, 582B, 612B, 592B, 586B, 624B)	1	
46583BA	Planet Kit, 6F35 2009-Up (Includes: 626B, 584B, 596B, 594B, 582B, 612B, 592B,586BA,624B)	1	
46583C	Planet Kit, 6T30 2009-Up (Includes 626C, 584C, 596C, 594C, 592C, 582C, 612C, 586C, 624C)	1	
46584A	Planet, 6T40 Output (5 Gear) (Uses 37 Teeth, 1 Groove Sun Gear)(2.553” Overall Thickness) 2008-Up	1	.24233635
46584AB	Planet, 6T40 Output (4 Gear)(Uses 37 Teeth, 1 Groove Sun Gear)(2.553” Overall Thickness) 2008-Up	1	
46584AC	Planet, 6T40 (4 Gears)(Uses 37 Teeth, No Groove Sun Gear)(2.553”Overall Thickness) 2008-Up	1	
46584B	Planet, 6F35 Output (5 Gear) (Uses 37 Teeth, No Groove Sun Gear)(2.673” Overall Thickness) 2009-Up	1	.9L8Z-7D491-A

© Whatever It Takes Transmission Parts. Inc.

46584C	Planet, 6T30 Output (4 Gear)(37 Teeth, No Groove)(5.395"OD)(2.266" Overall Thickness) 2008-Up	1	
46586A	Planet, 6T40 Reaction (4 Gear) (34 Teeth, 1 Groove Pinions) 2008-Up	1	24233625
46586AA	Planet, 6T40 Reaction (3 Gear) (34 Teeth, 1 Groove Pinions) 2008-Up	1	
46586B	Planet, 6F35 Reaction (4 Gear) (34 Teeth, No Groove Pinions)(Cast # 102810000818) 2009-Up	1	9L8Z-7D491-C
46586BA	Planet, 6F35 Reaction (3 Gear) (34 Teeth, No Groove Pinions)(Cast # 11166001664) 2009-Up	1	
46586C	Planet, 6T30 Reaction (3 Gear)(29 Teeth, 2 Grooves)(1.336"Thick) 2008-Up	1	
46592A	Ring Gear, 6T40 Input Planet (5.015"OD W/1 Groove On OD) 2008-Up	1	
46592B	Ring Gear, 6F35 Input Planet (5.139"OD No Groove On OD) 2009-Up	1	
46592C	Ring Gear, 6T40 Output Planet (5.017"OD W/ 1 Groove On OD)(1.206"Thick) 2008-Up	1	
46594A	Ring Gear, 6T40 Output Planet (5.017"OD W/1 Groove On OD)(1.206"Thick) 2008-Up	1	
46594B	Ring Gear, 6F35 Output Planet (5.144"OD W/No Groove On OD)(1.323"Thick) 2009-Up	1	
46594C	Ring Gear, 6T30 Output Planet (4.489"OD W/2 Grooves On OD)(1.224"Thick)(13 Lug) 2008-Up	1	
46596A	Ring Gear, 6T40 Reaction Planet (1.051"Thick)(5.985"OD W/1 Groove On OD) 2008-Up	1	24229582
46596B	Ring Gear, 6F35 Reaction Planet (1.044"Thick)(5.945"OD W/No Groove On OD) 2009-Up	1	
46596C	Ring Gear, 6T30 Reaction Planet (.990"Thick)(5.405"OD)(16 Lug W/2 Grooves On OD) (90 Teeth Left Angle) 2008-Up	1	
46598A	Ring Gear, 6T40/Hybrid Differential (1.359" Thick)(89 Teeth, 1 Groove On Outer Lugs)(15 Lug) 2008-Up	1	
46598B	Ring Gear, 6F35 Differential (1.336" Thick)(101 Teeth)(12 Lugs) 2009-Up	1	9L8Z-7F343-A
46598BA	Ring Gear, 6F35 Differential (1.359" Thick)(101 Teeth)(12 Lugs) 2009-Up	1	
46598C	Ring Gear, 6T30 Differential (1.127"Thick)(80 Teeth W/2 Grooves On Outer Lugs) 2008-Up	1	
46612A	Sun Gear, 6T40 Input Planet (41 Teeth, 1 Groove)(.630"Thick)(2.105"OD) 2008-Up	1	24230784
46612B	Sun Gear, 6F35 Input Planet (41 Teeth, No Groove)(.750"Thick)(2.185"OD) 2009-Up	1	9L8Z-7D063-A
46612C	Sun Gear, 6T30 Input Planet (39 Teeth, 2 Grooves)(1.981"OD) 2008-Up	1	
46618A	Sun Gear, 6T40 Differential (31 Teeth, 1 Groove)(1.845"OD) 2008-Up	1	
46618AE	Sun Gear, 6T40 Differential (41 Teeth, 1 Groove)(2.350"OD) 2008-Up	1	
46618B	Sun Gear, 6F35 Differential (39 Teeth, No Groove)(2.345"OD) 2009-Up	1	9L8Z-7F342-A
46618C	Sun Gear, 6T30 Differential (28 Teeth, W/2 Grooves)(1.782"OD) 2008-Up	1	
46624A	Sun Gear, 6T40 Reaction W/Hub (35 Teeth, 1 Groove)(2.350"Overall Height) 2008-Up	1	24231247
46624AA	Sun Gear, 6T40 Reaction W/Hub (35 Teeth, No Groove)(2.350"Overall Height) 2009-Up	1	
46624B	Sun Gear, 6T35 Reaction W/Hub (35 Teeth, No Groove)(2.300"Overall Height) 2009-Up	1	9L8Z-7A019-B
46624C	Sun Gear, 6T30 Reaction W/Hub (31 Teeth, No Groove)(2.395"Overall Height) 2008-Up	1	
46626A	Sun Gear, 6T40 Output Planet (37 Teeth, 1 Groove)(W/36 Teeth Clutch Hub) 2008-Up	1	24241246
46626B	Sun Gear, 6F35 Output Planet (37 Teeth, No Groove)(W/36 Teeth Clutch Hub) 2009-Up	1	9L8Z-7A019-A
46626C	Sun Gear, 6T30 Output Planet (37 Teeth, No Groove)(W/36 Teeth Clutch Hub)(6 3/4"OD) 2008-Up	1	
46634A	Ring Tower, 6T40 3-5 Reverse & 4-5-6 Clutch (4 Ring)(3 Bolt)(2.322"Long) 2008-09	1	24231198
46634AA	Ring Tower, 6T40 3-5 Reverse & 4-5-6 Clutch (3 Ring)(3 Bolt)(2.080" Long) 2010-Up	1	
46634B	Ring Tower, 6F35 3-5 Reverse & 4-5-6 Clutch (4 Ring)(3 Bolt)(2.283" Long) 2009-Up	1	
46634CA	Ring Tower, 6T30 4-5-6 Clutch (Bolts To Ring Cover) 2009-Up	1	24249634
46644A	Diode, 6T40 Low/Reverse (.710"Thick Outer Race)(48 Inner Teeth On Inner Race) (9 1/4"OD) 2008-Up	1	24242021
46644B	Diode, 6F35 Low/Reverse (.792"Thick Outer Race)(32 Inner Teeth On Inner Race) 2009-Up	1	9L8Z-7A089-A
46644H	Diode, 6T40 (Generation 3) Low/Reverse (48 Inner Teeth)(.710"Outer Race)(Aluminum Inner) (48 Out Teeth) 2012-Up	1	
46670A	Shaft, 6T40 Input (10 9/16" Long) 2008-Up	1	24235179
46670AB	Shaft, 6T40 Input (10 5/16" Long) 2010-Up	1	24235179
46670AC	Shaft, 6T40 (Generation 3) Input (10 3/8"Long)(Converter Spline Is 1 1/16" Long)(2nd Design) E2014-Up	1	
46670B	Shaft, 6F35 Input (10 11/16" Long) 2009-Up	1	9L8Z-7F213-A
46670C	Shaft, 6T30 Input (10 1/4' Long)(Cast TV524231696) 2008-Up	1	
46671H	Shaft, 6T40 Pump Input (3.220"Long)(.370"Tip)(2 Sets Of Splines)(15/15 Splines On Each End) 2012-Up	1	
46678A	Hub, 6T40 Drive Sprocket (59 Sprocket Splines)(43 Splines To Output Planet) (Sprocket Spline Is 1.155" Long) 2008-Up	1	24233647
46678AA	Hub, 6T40 Drive Sprocket (59 Sprocket Splines)(43 Splines To Output Planet)(Sprocket Spline Is 1.385" Long) 2008-Up	1	
46678C	Hub, 6T30 Drive Sprocket (37 Sprocket Splines)(2.530"Tall) 2008-Up	1	24233647
46690A	Park Gear, 6T40 (24 Outer Lugs)(59 Inner Splines)(8"OD) 2008-Up	1	
46690B	Park Gear, 6F35 W/Drive Sprocket Hub (24 Outer Lugs)(8"OD) 2009-Up	1	9L8Z-7060-A
46690C	Park Gear, 6T30 (22 Lugs)(7 1/8"OD) 2008-Up	1	
46698-1A	Oil Baffle, 6T40 Chain (2 Bolts To Case)(Cast # 24239618)(Plastic) 2008-Up	1	
46698-1B	Oil Baffle, 6F35 Chain (2 Bolts To Case)(Metal) 2009-Up	1	9L8Z-7978-A
46698-1C	Oil Baffle, 6T30 Chain (2 Bolts To Case)(Cast # 24247894)(Plastic) 2008-Up	1	
46698-1H	Oil Baffle, 6T40 (Generation 3) Chain (2 Bolts To Cast)(Plastic)(Cast # 24262100) 2012-Up	1	
46698A	Oil Baffle, 6T40 Chain (2 Bolts To Bell)(Cast # 24246165)(Plastic) 2008-Up	1	
46698B	Oil Baffle, 6F35 Chain (2 Bolts To Bell)(Cast # 9L8P-7H245-AE)(Plastic) 2009-Up	1	9L8Z-7H245-A
46698C	Oil Baffle, 6T30 Chain (2 Bolts To Bell)(Cast # 24239619)(Plastic) 2008-Up	1	
46698H	Oil Baffle, 6T40 (Generation 3)(2 Bolt Holes To Bell)(Black)(Cast # 24262101) 2012-Up	1	

© Whatever It Takes Transmission Parts. Inc.

PART #	HARDPARTS (Continued)	QTY	REFERENCE #
46700A	Chain, 6T40 (1"Wide)(40 Links) 2008-Up	1	.24238173
46700AB	Chain, 6T40 (1.105" Wide)(38 Links) 2008-Up	1	.24238173
46700B	Chain, 6F35 (1"Wide)(41 Links) 2009-Up	1	9L8Z-7G249-C
46700C	Chain, 6T30 (.863" Wide)(37 Links) 2008-Up	1	
46700D	Chain, 6T45/6T50 (1.25" Wide) 2008-Up	1	
46700H	Chain, 6T40 (Generation 3)(1.106"Thick)(41 Links) 2012-Up	1	
46701H	Oil Snubber, 6T40 (Generation 3) Pump (Black)(Cast # 24262298) 2012-Up	1	
46702A	Oil Scoop, 6T40 Chain (8"Long) (Black Plastic) 2008-Up	1	.24237594
46702B	Oil Scoop, 6F35 Chain (5 1/4" Long)(White Plastic)(Cast #BB5P-7J387-AA) 2009-Up	1	.9L8Z-7J387-A
46702C	Oil Scoop, 6T30 Chain (8" Long)(Plastic)(Cast # 24248479) 2008-Up	1	.24237594
46702H	Oil Scoop, 6T40 (Generation 3) Chain (8 1/4" Long)(Plastic) 2012-Up	1	
46705A	Sprocket, 6T40 Drive (48 Teeth)(59 Inner Splines)(1.170"Thick) 2008-Up	1	.24231312
46705AB	Sprocket, 6T40 Drive (40 Teeth)(.922"Thick) 2008-Up	1	
46705B	Sprocket, 6F35 Drive (45 Teeth)(.922"Thick) 2009-Up	1	9L8Z-7G132-D
46705BC	Sprocket, 6F35 Drive (48 Teeth)(.922" Thick) 2009-Up	1	
46705C	Sprocket, 6T30 Drive (40 Teeth)(.682"Thick) 2008-Up	1	
46705H	Sprocket, 6T40 (Generation 3) Drive (46 Teeth)(.922") 2012-Up	1	
46706A	Sprocket, 6T40 Driven (40 Teeth) (1.162"Wide Teeth) 2008-Up	1	.24232286
46706B	Sprocket, 6F35 Driven (44 Teeth) (.922" Wide Teeth) 2009-Up	1	9L8Z-7G132-B
46706BA	Sprocket, 6F35 Driven (41 Teeth) (.922" Wide Teeth) 2009-Up	1	
46706BB	Sprocket, 6F35 Driven (42 Teeth) (.922" Wide Teeth) 2009-Up	1	
46706C	Sprocket, 6T30 Driven (40 Teeth) (.688" Wide Teeth)(5.205"OD) 2008-Up	1	
46715	Differential, 6T30 (2WD)(5 1/4" Tall)(4 Gear Planet)(Uses 37 Teeth Sun Gear) 2008-Up	1	
46715A	Differential, 6T40 (5 3/4" Tall)(4 Gear Planet)(Uses 31 Teeth Sun Gear) 2008-Up	1	
46715AE	Differential, 6T40 (5 3/4" Tall)(4 Gear Planet)(Uses 41 Teeth Sun Gear) 2008-Up	1	
46715B	Differential, 6F35 (2WD)(7" Tall)(4 Gear Planet)(Uses 39 Teeth Sun Gear) 2009-Up	1	.9L8Z-7F465-B
46715BA	Differential, 6F35 (AWD)(7" Tall)(4 Gear Planet)(Uses 39 Teeth Sun Gear) 2009-Up	1	
46715C	Differential, 6T30 (5 1/4" Tall)(4 Gear Planet)(Uses 29 Teeth Sun Gear) 2008-Up	1	
46715D	Differential, 6T45/6T50 (AWD)(6 7/8"Long)(2.120"Nose)(31 Teeth)(4 Gear Planet) 2008-Up	1	
46715H	Differential, 6T40 (Generation 3)(5 7/8" Tall)(Uses 41 Teeth Sungear)(4 Gear Planet) 2012-Up	1	
46740A	Valve Body, 6T40/6T45/6T50 (Gen 1)(Cast # 24248223 On Bottom Side) 2008-Up	1	
46740AA	Valve Body, 6T40/6T45/6T50 (Gen 2)(Cast # 24249322 On Bottom Side) 2008-Up	1	
46740B	Valve Body, 6F35 (Cast # EBJZA On Bottom Side) 2008-Up	1	.9L8Z-7A100-A
46740C	Valve Body, 6T30 (Cast # 24249522 On Bottom)(Aluminum)(W/Top Housing) 2008-Up	1	
46740H	Valve Body, 6T40 (Generation 3)(Aluminum Top Housing)(Cast 24286446) 2012-Up	1	

PART #	VALVE BODY COMPONENTS	QTY	REFERENCE #
S46741-6K	End Plug Kit, 6T40/6T45/6T50 (Generation 1)(Contains: 6 End Plugs And 9 O-Rings, 3 Are Extra)(Sonnax)	1	
S746741-6BK	End Plug Kit, 6T30 & 6T40/6T45/6T50 (Gen 2)(Contains: 6 End Plugs & 9 O-Rings, 3 Are Extra)(Sonnax)	1	
S46741A-ZK	Zip Kit, 6T40/6T45/6T50 (Gen 1) 2008-11 (Sonnax)(Gen 1 Has Pressure Switches On TECUM Unit)	1	
S46741AA-ZK	Zip Kit, 6T30/6T40/6T45/ 6T50 (Gen 2) 2012-Up (Sonnax) (Contains: 5 End Plugs, 7 O-Rings, 6 Checkballs, TCC Reg Apply Valve, Spring, Shuttle Valve, End Plug & O-Ring, AFL Valve, Spring, Sleeve & Retainer Clip, Drill Bit (.062" Dia.), 2 Aluminum Plugs (.062" Dia.))	1	
S46741AL-1	Valve, 6T40/6T45 Solenoid Regulator (Oversize) 2008-Up (Sonnax)(Must Use Reamer # T-144740-TL)	1	
S46741BL-1	Valve, 6F35 Solenoid Regulator (Oversize) 2009-Up (Sonnax)(Must Use Reamer #T-144740-TL)	1	
T-144740-TL	Reamer For S46741AL-1	1	
S46741A-ZK	Zip Kit, 6T40 2008-Up (Sonnax)	1	
S46741B-ZK	Zip Kit, 6F35 (Gen 1 & Gen 2) (Sonnax)	1	
S46741BCK	Valve Kit, 6F35 TCC Regulator (Oversized)(Requires T-F-144740-TL19)	1	
T-F-144740-TL19	Tool Kit For S46741BCK	1	

PART #	HARDPARTS (Continued)	QTY	REFERENCE #
46746A	Seperator Plate, 6T40 Valve Body To Aluminum Housing (W/Bonded Gaskets) 2008-Up	1	
46746B	Seperator Plate, 6F35 Valve Body To Solenoid Plate (W/Bonded Gaskets)(Cast # BW28000032 MA) 2009-Up	1	.9L8Z-7Z490-A
46746C	Seperator Plate, 6T30/6T40 (Generation 3)(W/Bonded Gaskets) 2008-Up	1	
46747A	Seperator Plate, 6T40 Valve Body To Case (W/Bonded Gaskets) 2009-Up	1	
46747B	Seperator Plate, 6F35 Valve Body To Case (W/Bonded Gaskets)(Cast # DV6P-7Z490-AA) 2009-Up	1	.9L8Z-7Z490-B
46747C	Seperator Plate, 6T30/6T40 (Generation 3) Valve Body To Case (W/Bonded Gasket)(1 Notch On Plate) 2008-Up	1	

© Whatever It Takes Transmission Parts. Inc.

46750A	Bell Housing, 6T40 (6" Top Bolts) (Starter At 3:00)(Cast #CAV. 3.1) 2008-Up	1		
46750AB	Bell Housing, 6T40 (5" Top Bolts) (Starter At 3:00) 2008-Up	1		
46750AE	Bell Housing 6T40 (5" Top Bolts)(Starter At 10:00) 2008-Up	1		
46750B	Bell Housing, 6F35 (2.5L)(6 3/8" Top Bolts)(Starter At 2:00)(Cast # RFBB5P-7976-BB) 2009-Up	1		9L8Z-7005-V
46750BA	Bell Housing, 6F35 (5 1/2" Top Bolts)(Starter At 2:00)(Cast # RF9E5P-7976-GD)	1		
46750C	Bell Housing, 6T30 (5" Top Bolts)(14 Bolts To Case)(Cast # 24262946)(Start At 10:00) 2008-Up	1		
46750D	Bell Housing, 6T45/6T50 (AWD)(Starter At 4:00)(2.595 Axle Seal OD & Needle Brg) (Cast 24243282) 2008-Up	1		
46750H	Bell Housing, 6T40 (Generation 3) (5 1/8" Top Bolts)(15 Bolts To Case)(Cast # 24262219) (3" Pump Hole)(Starter At 10:00) 2012-Up	1		
46755-1H	Seal Retainer, 6T40 (Generation 3) Front Seal To Pump Plate (Aluminum)(3.673"OD)(1.935"ID) (Cast # 24262293) 2012-Up	1		
46755H	Pump Plate, 6T40 (Generation 3)(Aluminum)(4 Valves)(15 Bolts Holes To Stator)(Cast # 24262222) (14 Threaded Holes Stator To Plate) 2012-Up	1		
46760A	Case, 6T40 (15 Bolts To Bell)(Tag # 24252534) 2008-Up	1		
46760AA	Case, 6T40 (15 Bolts To Bell)(Tag # 24231893) 2008-Up	1		
46760AB	Case, 6T40 (15 Bolts to Bell)(Tag # 24250636) 2008-Up	1		
46760AC	Case, 6T40 (15 Bolts To Bell)(Tag # 24242247)2008-Up	1		
46760AD	Case, 6T40 (15 Bolts To Bell)(Tag # 24272513) 2008-Up	1		
46760B	Case, 6F35 (17 Bolts To Bell)(Cast # RFCV6P-7006-CC) 2009-Up (Uses A Plastic Side Pan)	1		9L8Z-7005-A
46760BB	Case, 6F35 (17 Bolts To Bell)(Cast # RF9L8P-7006-CA) 2009-Up (Uses A Metal Side Pan)	1		
46760C	Case, 6T30 (14 Bolts To Bell)(Cast # 24264700) 2008-Up	1		
46760H	Case, 6T40 (Generation 3)(15 Bolts To Bell Housing)(Cast # 24261856) 2012-Up	1		
46766A	Side Pan, 6T40 (13 Bolt)(Connector Hole Is Horizonal)(Plastic) 2008-Up	1		24243517
46766B	Side Pan, 6F35 (13 Bolt)(Connector Hole Is Vertical)(Plastic)(Cast # CV6P-7G004-AA) (Uses A Molded Rubber Gasket) 2009-Up	1		9L8Z-7G004-A
46766BB	Side Pan, 6F35 (13 Bolt)(Connector Hole Is Vertical)(Metal)(Cast # 9L8P-78004-BC)(Does Not Use A Molded Rubber Gasket) 2009-Up	1		
46776AK	Bolt Set, 6T30/6T40 Bell Housing To Case (15 Pieces) 2008-Up	1		
46776BK	Bolt Set, 6F35 Bell Housing To Case (17 Pieces) 2009-Up	1		
46777AK	Bolt Set, 6T30/6T40 Stator To Bell Housing (13mm Head)(8 Pieces) 2008-Up	1		
46777BK	Bolt Set, 6F35 Stator To Bell Housing (10mm Head)(8 Pieces) 2009-Up	1		
46777HK	Bolt Set, 6T40 (Generation 3) Pump Plate To Stator (15 Pieces) 2012-Up	1		
46778AK	Bolt Set, 6T30/6T40/6F35 Stator To Body (23 Pieces) 2008-Up	1		
46778HK	Bolt Set, 6T40 (Generation 3) Stator To Pump Plate (19 Pieces) 2012-Up	1		
46788AK	Bolt Set, 6T30/6T40/Hybrid Side Pan To Case (8mm Head)(13 Pieces) 2008-Up	1		
46788BK	Bolt Set, 6F35 Side Pan To Case (Four 8mm Head & Nine 13mm Head (13 Pieces) 2009-Up	1		
46790AK	Bolt Set, 6T40/6F35 Ring Tower To Case (3 Pieces) 2008-Up	1		
46790CK	Bolt Set, 6T30 Ring Tower To Case (3 Pieces)(T25 x 2.208"Long) 2008-Up	1		
46791AK	Bolt Set, 6T40 Valve Body To Case (23 Pieces) 2008-Up	1		
46791BK	Bolt Set, 6F35 Valve Body To Case (22 Pieces) 2009-Up	1		
46791CK	Bolt Set, 6T30 Valve Body To Case (23 Pieces) 2008-Up	1		
46797A	Nut, 6T40 Shift Lever (W/Shoulder) 2008-Up	1		
46797B	Nut, 6F35 Shift Lever (No Shoulder) 2009-Up	1		
46845A	Housing, 6T40 3-5 Reverse Clutch Piston (.708"Thick At Outer Lugs)(6 1/4"OD) 2008-Up	1		24230743
46845B	Housing, 6F35 3-5 Reverse Clutch Piston (.784"Thick At Outer Lugs)(6 1/4"OD) 2009-Up	1		9L8Z-7F283-A
46845C	Housing, 6T30 3-5 Reverse Clutch Piston (.815"Thick)(5.840"OD)(4.645"ID) 2008-Up	1		
46850A	Cushion, 6T40 2-6 Clutch (.058"Thick)(8 5/8"OD)(Waved) 2008-Up	1		24230729
46850B	Cushion, 6F35 2-6 Clutch (.035"Thick)(8 5/8"OD)(Waved) 2009-Up	1		9L8Z-7E085-A
46850C	Cushion, 6T30 2-6 Clutch (.062"Thick)(6 3/4"ID)(Waved) 2008-Up	1		
46862A	Snap Ring, 6T40 Holds 2-6 Clutch Return Spring In (.058"Thick)(9 9/16"OD) 2008-Up	1		24230730
46862B	Snap Ring, 6F35 Holds 2-6 Clutch Return Spring In (.084"Thick)(9 7/16"OD) 2009-Up	1		9L8Z-7D483-A
46862C	Snap Ring, 6T30 Holds 2-6 Clutch Return Spring In (.060"Thick)(8 3/8"OD) 2008-Up	1		
46867A	Snap Ring, 6T40 Holds 4-5-6 Clutch Pressure Plate In (.057"Thick)(5.200"OD) 2008-Up	1		24230756
46867B	Snap Ring, 6F35 Holds 4-5-6 Clutch Pressure Plate In (.059"Thick)(5.015"OD) 2009-Up	1		9L8Z-7B066C
46867C	Snap Ring, 6T30 Holds 4-5-6 Clutch Pressure Plate In (.060"Thick)(4.689"OD) 2008-Up	1		
46870H	Snap Ring, 6T40 (Generation 3) Holds Pump Input Shaft To Stator (1.315"OD)(.025"Thick)	1		
46873A	Use U46893A	1		
46873B	Snap Ring, 6F35 Holds 1-2-3-4 Clutch Return Spring In (.057"Thick)(6 9/16"OD) 2009-Up	1		9L8Z-7H365-A
46873C	Snap Ring, 6T30 Holds 1-2-3-4 Clutch Return Spring In (.066"Thick)(6 3/16"OD) 2008-Up (Can Use For U46893C)	1		
46877A	Snap Ring, 6T40 Holds 4-5-6 Clutch Spring Retainer In Drum (.045"Thick)(1.843"OD) 2008-09	1		24230752
46877B	Snap Ring, 6F35 Holds 4-5-6 Clutch Spring Retainer In Drum (.059"Thick)(2.660"OD) 2008-Up (Also Fits 6T40 #877 2010-Up	1-2		
46877C	Snap Ring, 6T30 Holds 4-5-6 Clutch Spring Retainer In Drum (.046"Thick)(1.838"OD) 2008-Up	1		24230752
46878	Snap Ring, 6T40 Holds 3-5 Reverse Clutch Pressure Plate In (.059"Thick)(4.880"OD) (1st Design) 2008	1		
46878A	Snap Ring, 6T40 Holds 3-5 Reverse Clutch Pressure Plate In (.062"Thick)(5.490"OD) 2008-Up	1		24253298

© Whatever It Takes Transmission Parts. Inc.

PART #	HARDPARTS (Continued)	QTY	REFERENCE #
46878B	Snap Ring, 6F35 Holds 3-5 Reverse Clutch Pressure Plate In (.059"Thick)(6.030"OD) 2009-Up	1	
46878C	Snap Ring, 6T30 Holds 3-5 Reverse Clutch Pressure Plare In (.061"Thick)(5.095"OD) 2008-Up	1	
46879A	Snap Ring, 6T40 Holds 3-5 Reverse Piston Housing To 4-5-6 Clutch Drum (.057"Thick)(5.040"OD) 2008-Up	1	
46879AB	Snap Ring, 6T40 Holds 3-5 Reverse Piston Housing To 4-5-6 Drum (5.090"OD) 2008-Up	1	
46879B	Snap Ring, 6F35 Holds 3-5 Reverse Piston Housing To 4-5-6 Clutch Drum (.059"Thick)(5.200"OD) 2009-Up	1	9L8Z-7C122-E
46879C	Snap Ring, 6T30 Holds 3-5 Reverse Piston Housing To 4-5-6 Clutch Drum (4.690"OD)	1	
46880A	Snap Ring, 6T40/6F35 Holds Input Shaft To 4-5-6 Clutch Drum (.039"Thick)(.818"OD) 2008-Up	1	24231268
46880C	Snap Ring, 6T30 Holds Input Shaft To 4-5-6 Clutch Drum (.700"OD)(.030"Thick) 2008-Up	1	
46882A	Snap Ring, 6T40/6F35 Holds Output Planet Ring Gear To Input Planet (.097"Thick)(5.285"OD) 2008-Up	1	
46882C	Snap Ring, 6T30 Holds Output Planet Ring Gear To Input Planet (.097"Thick)(4.717"OD) 2008-Up	1	
46885A	Snap Ring, 6T40 Holds 1-2-3-4 Clu Pressure Plate In (.130"Thick)(9 3/4"OD)(W/Square Ends) 2008-Up	1	24231265
46885B	Snap Ring, 6F35 Holds 1-2-3-4 Clutch Pressure Plate In (.128"Thick)(9 3/4"OD)(W/Hooked Ends) 2009-Up	1	9L8Z-7D483-A
46885C	Snap Ring, 6T30 Holds 1-2-3-4 Clutch Pressure Plate In (.130 Thick)(8 3/4"OD) 2008-Up	1	
46888A	Snap Ring, 6T40 6F35 Holds Reaction Planer Ring Gear To Output Planet (.079"Thick)(5.763"OD) 2008-Up	1	
46888C	Snap Ring, 6T30 Holds Reaction Planet Ring Gear To Output Planet (.078"Thick)(5.374"OD) 2008-Up	1	
46890A	Snap Ring, 6T40 Holds Input Planet Ring Gear To Reaction Planet (.099"Thick)(5.118"OD)(.160"Wide ID To OD) 2008-Up	1	
46890B	Snap Ring, 6F35 Holds Input Planet Ring Gear To Reaction Planet (.099"Thick)(5.110"OD)(.156"Wide ID To OD) 2009-Up	1	
46890C	Snap Ring, 6T30 Holds Input Planet Ring Gear To Reaction Planet (.098"Thick)(4.479"OD) 2008-Up	1	
46893A	Snap Ring, 6T40 Holds Low/Revere Clutch Return Spring In (.060"Thick)(6 3/8"OD) 2008-Up	1	24252792
46893B	Snap Ring, 6F35 Holds Low/Reverse Clutch Return Spring In (.057"Thick)(6 1/2"OD) 2009-Up	1	9L8Z-7C122-A
46893C	Snap Ring, 6T30 (Same As U46873C)	1	24230815
46894A	Use U46898A	1	
46894B	Snap Ring, 6T35 Holds Drive Sprocket To Hub (.058"Thick)(3.684"OD) 2009-Up	1	9L8Z-7C122-B
46897A	Snap Ring, 6T40 Holds Pump Seal In (.059"Thick)(2.846"OD) 2008-Up (Also Fits Mid 2013-Up 6F35)	1	
46897H	Snap Ring, 6T40 (Generation 3) Holds Gear To Pump Plate (.038"Thick)(2 Eyelets)(.575"OD) 2012-Up	1	
46898A	Snap Ring, 6T40 Holds Park Gear To Drive Sprocket Hub (.058"Thick)(3.642"OD) 2008-Up (Also Fits 6T40 Drive Sprocket To Hub # 894)	1-2	24231278
46899A	Snap Ring, 6T40 Holds Ring Gear To Bell Housing (.114"Thick)(6 1/4"OD)(W/Square Ends) 2008-Up	1	
46899B	Snap Ring, 6F35 Holds Ring Gear To Bell Housing (.111"Thick)(7"OD)(W/Hooked Ends) 2009-Up	1	9L8Z-7C122-A
46899C	Snap Ring, 6T30 Holds Ring Gear To Bell Housing (.120"Thick)(5.705"OD) 2008-Up	1	
46960-1B	Apply Ring, 6F35 2-6 Clutch (Snaps Onto Bonded Piston)(Steel)(.635"Thick)(8 1/8"OD) 2009-Up	1	9L8Z-7E005-B
46960A	Piston, 6T40 (Generation 1,2 & 3) 2-6 Clutch (Bonded)(.870"Thick)(7 3/4"OD) 2008-Up	1	24230727
46960ABK	Piston Kit, 6T40/6T45/6T50 (Generation 2) 2012-Up	1	
46960AK	Piston Kit, 6T40/6T45/6T50 (Generation 1)(Bonded)(Contains 5 Pistons) 2008-11	1	
46960B	Piston, 6F35 2-6 Clutch (Bonded) (.630"Thick)(7 3/4"OD) 2009-Up	1	9L8Z-7E005-A
46960BK	Piston Kit, 6F35 2009-Up	1	
46960C	Pistion, 6T30 2-6 Clutch (Bonded)(.927"Thick)(7 1/8"OD)(Cast # 24259908) 2008-Up	1	
46960CK	Piston Kit, 6T30 2011-Up	1	
46962A	Piston, 6T40 1-2-3-4 Clutch (Bonded)(8 1/16"OD)(6 1/2"ID)(.460" Thick On Outer Edge)(Cast # 20150131) 2008-Up	1	2425106
46962B	Piston, 6F35 1-2-3-4 Clutch (Bonded)(8 1/16"OD)(7 1/8"ID)(.550"Thick On Outer Edge)(Bonded)(Cast #9L8P-7A262-AC) 2009-Up	1	9L8Z-7A262-A
46962C	Piston, 6T30 1-2-3-4 Clutch (Bonded)(7 7/16"OD)(6 1/2"ID) 2008-Up	1	
46964A	Piston, 6T40 4-5-6 Clutch (Aluminum) (1.076"Thick)(4.622"OD)(Has 2 O-Ring Grooves On The OD) 2008-09	1	2423125
46964AA	Piston, 6T40 4-5-6 Clutch (Aluminum)(1.076" Thick)(4.622"OD)(Has 1 O-Ring Groove On The OD) 2010-Up	1	
46964B	Piston, 6F35 4-5-6 Clutch (Aluminum) (1.101"Thick)(4.622"OD) 2009-Up	1	9L8Z-7A262-C

FORD

© Whatever It Takes Transmission Parts. Inc.

46964C	Piston, 6T30 4-5-6 Clutch (Aluminum)(1.062"Thick)(2.712"ID)(1 O-Ring Groove On OD) 2008-Up	1	
46965	Piston, 6T40 3-5 Reverse Clutch (Bonded)(6.340"OD)(5.165"ID)(1.105"Thk)(3 Notches) (Cast # 24230742) 2008-09	1	
46965A	Piston, 6T40 3-5 Reverse Clutch (Bonded)(Cast # 24230742) 2008-Up	1	.24266145
46965B	Piston, 6F35 3-5 Reverse Clutch (Bonded)(Cast # 9L8P-7F254-AC) 2009-Up	1	.9L8Z-7A262B
46965C	Piston, 6T30 3-5 Reverse Clutch (Bonded)(5.915"OD)(4.700"ID)(Cast # 24259910) 2008-Up	1	
46967A	Piston, 6T40 Low/Reverse Clutch (Bonded)(8 1/8"OD)(6 1/2"ID)(.480" Thick On Outer Edge) 2008-Up	1	.24230813
46967B	Piston, 6F35 Low/Reverse Clutch (Bonded)(8 3/16"OD)(6 1/2"ID)(.430" Thick On Outer Edge) 2009-Up	1	.9L8Z-7D402-A
46967C	Piston, 6T30 (Same As U46962C)	1	
46970A	Spring, 6T40 2-6 Clutch Return (10 Fingers)(8 5/8"OD) 2008-Up	1	.24230728
46970B	Spring, 6F35 2-6 Clutch Return (11 Fingers)(8 5/8"OD) 2009-Up	1	.9L8Z-7B070-A
46970C	Spring, 6T30 2-6 CLutch Return (10 Fingers)(7 13/16"OD)(.053"Thick) 2008-Up	1	
46972A	Spring, 6T40 1-2-3-4 Clutch Return (16 Triangle Fingers)(7 7/8"OD) 2008-Up	1	.24230817
46972B	Spring, 6F35 1-2-3-4 Clutch Return)(16 Square Fingers)(7 7/8"OD) 2009-Up	1	.9L8Z-7B070-D
46972C	Spring, 6T30 1-2-3-4 Clutch Retun (16 Triangle Fingers)(7 2/8"OD)(.051"Thick) 2008-Up	1	
46972H	Spring, 6T40 1-2-3-4 Clutch Return (18 Triangle Fingers)(7 13/16"OD)(.066"Thick) 2012-Up	1	
46974A	Spring/Retainer, 6T40 4-5-6 Clutch Return (28 Springs) 2008-09	1	
46974AA	Spring/Retainer, 6T40 4-5-6 Clutch Return (25 Springs) 2010-Up	1	
46974B	Spring/Retainer, 6F35 4-5-6 Clutch Return (30 Springs)(.670"Thick)(4.232"OD) 2009-Up	1	.9L8Z-7F222-A
46974C	Spring/Retainer, 6T30 4-5-6 Clutch Return (30 Springs) 2008-Up	1	
46975A	Spring/Retainer, 6T40 3-5 Reverse Clutch Return (27 Springs)(5 3/4"OD) 2008-Up	1	.24230741
46975B	Spring/Retainer, 6F35 3-5 Reverse Clutch Return (26 Springs)(5 15/16"OD) 2009-Up	1	.9L8Z-7F235-A
46975C	Spring/Retainer, 6T30 3-5 Reverse Clutch Return (41 Springs)(5.370"OD)(.790"Thick) 2008-Up	1	
46975H	Spring/Retainer, 6T40 Hybrid 3-5 Reverse Clutch Return (58 Springs)(5 3/4"OD) 2012-Up	1	
46977A	Spring, 6T40 Low/Reverse Clutch Return (18 Fingers)(7 3/4"OD) 2008-Up	1	.24230814
46977AA	Spring, 6T40 Low/Reverse Clutch Return (16 Fingers)(7 7/8"OD) 2008-Up	1	
46977B	Spring, 6F35 Low/Reverse Clutch Return (16 Fingers)(7 11/16"OD) 2009-Up	1	.9L8Z-7B070-C
46977C	Spring, 6T30 (Same As U46972C)	1	
46984A	Retainer/Piston, 6T40 4-5-6 Clutch (Bonded)(2.628"ID Where Snap Ring #877 Rides) (Gen 1) 2008-11	1	.24243624
46984AA	Retainer/Piston, 6T40 4-5-6 Clutch (Bonded)(1.788"ID Where Snap Ring #877 Rides) (Gen 2 & 3) 2012-Up	1	.24261299
46984B	Retainer/Piston, 6F35 4-5-6 Clutch (Bonded)(Cast #9L8P-7J029-AA) 2009-Up	1	.9L8Z-7H360-A
46984C	Retainer/Piston, 6T30 4-5-6 Clutch (Bonded)(1.785"ID Where Snap Ring Rides) 2008-Up	1	
46991-2A	Detent Spring, 6T40 Rooster Comb (Roller Is .543"Long) 2008-Up	1	.24231174
46991-2B	Detent Spring, 6F35 Rooster Comb (Roller Is .645"Long) 2009-Up	1	.9L8Z-7E332-A
46991-4A	Manual Shaft, 6T40 (3.387" Long)(Uses 2 Roll Pins To Hold Shaft To Case & A Roll Pin To Neutral Safety Switch) 2008-Up	1	.24231168
46991-4AA	Manual Shaft, 6T40 (3.590"Long)(Uses 2 Roll Pins To Hold Shaft To Case & A Roll Pin To Neutral Safety Switch) 2008-Up	1	
46991-4B	Manual Shaft, 6F35 (3.387" Long)(Uses 1 Roll Pin To Hold Shaft To Neutral Safety Switch) 2009-Up	1	.9L8Z-7A256-A
46991-4C	Manuel Shaft, 6T30 (4.617"Long)(Uses 2 Pins)(1 Holds Shaft To Case & 1 To Neutral Switch) 2008-Up	1	
46991-4H	Manuel Shaft, 6T40 (Generation 3) (3.601"Long) 2012-Up	1	
46992A	Manual Lever, 6T40 (2.812"Long With 1/8" Bend) 2008-Up	1	
46992B	Manual Lever, 6F35 (3.055"Long With 1/2" Bend)(Cast # 26T) 2009-Up	1	
46992C	Manuel Lever, 6T30 (2.275"Long W/ 1/2" Bend) 2008-Up	1	
46992H	Manuel Lever, 6T40 (Generation 3) (2.820"Long)(1/2"bend)(Round Ball Tip) 2012-Up	1	
46994A	Actuator, 6T40/6F35 Park Rod (6 1/4"Long) 2008-Up	1	2423072
46994C	Actuator, 6T30 Park Rod (5.816"Long) 2008-Up	1	
46995A	Park Pawl Assembly, 6T40 (5 Pieces) 2008-Up	1	
46995B	Park Pawl Assembly, 6F35 (4 Pieces) (Cast # 9L8P-7A441-AD On Park Pawl) 2009-Up	1	
46995C	Park Pawl Assembly, 6T40 (5 Pieces) 2008-Up	1	
46998B	Cooler, 6F35 (Aluminum)(2 Bolt) (Mounts On Top Of Case)(Cast # CV6P-7869-AD) 2009-Up	1	
46999-2H	Oil Delivery Tube, 6T40 (Generation 3) 12 Volt Pump To Case 2012-Up	1	

© Whatever It Takes Transmission Parts. Inc.

AWTF80SC / 81SC (AF21/AF40-6)

FWD 6 Speed

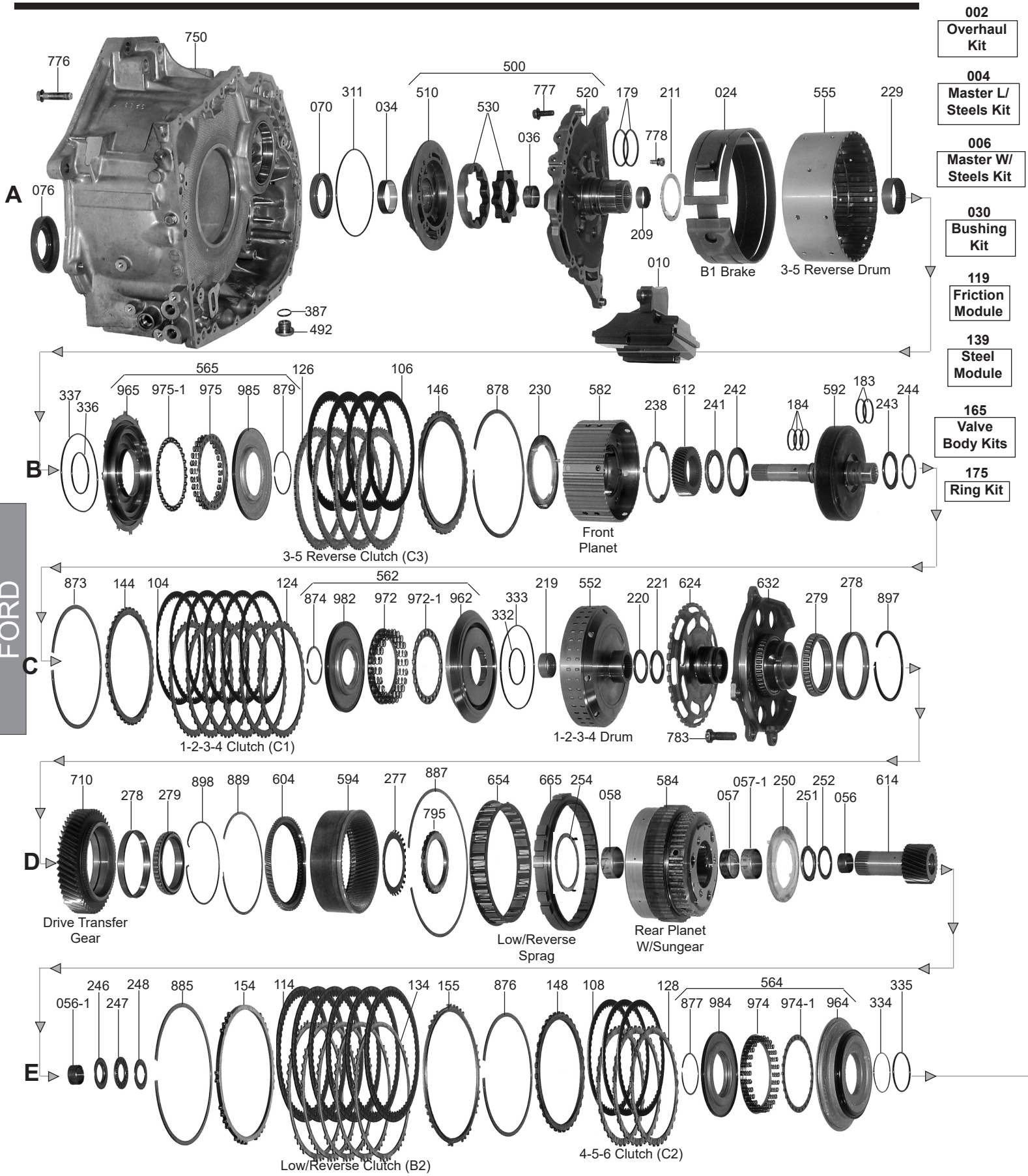

FORD

© Whatever It Takes Transmission Parts. Inc.

AWTF80SC / 81SC (AF21/AF40-6)

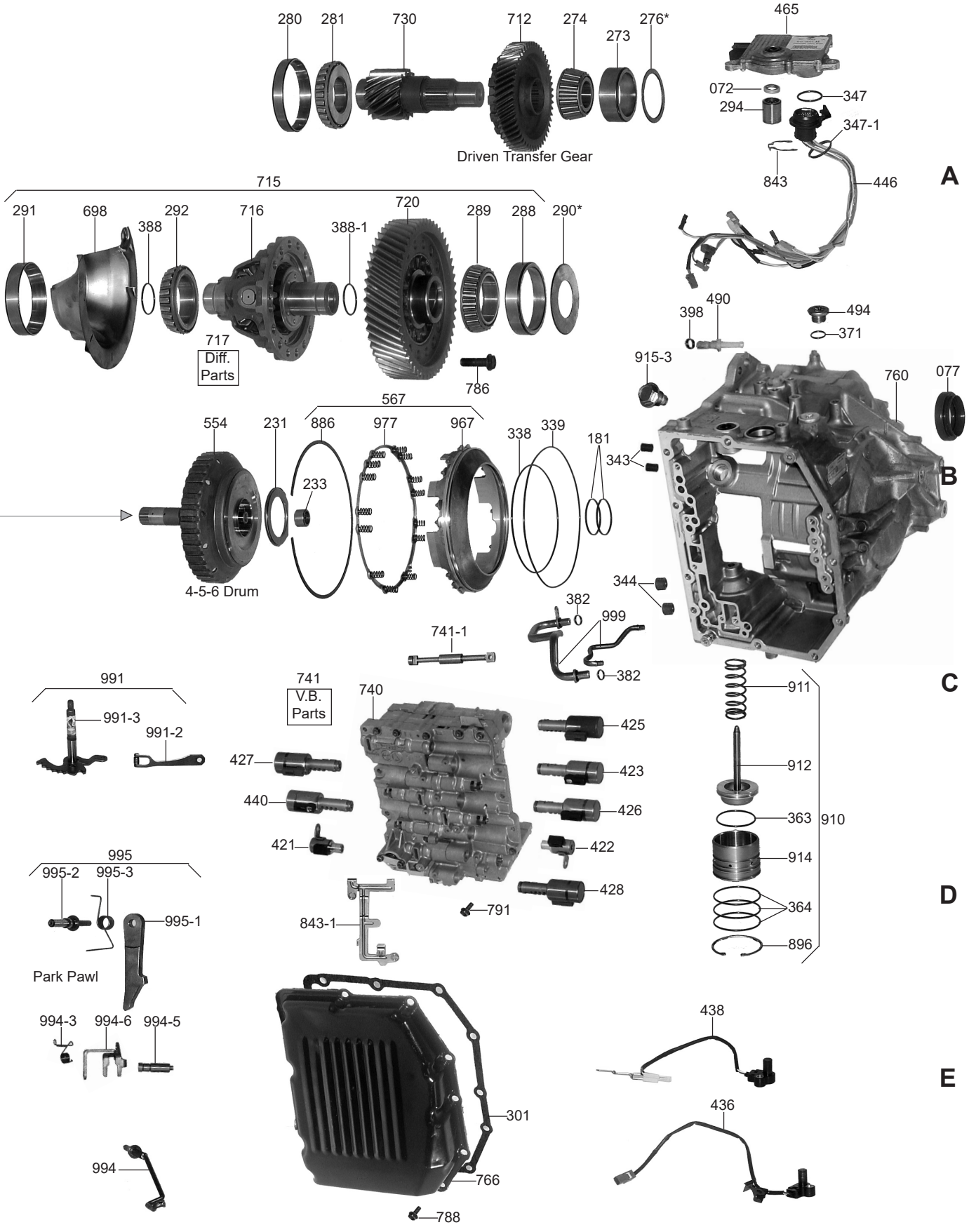

1-800-940-0197

© Whatever It Takes Transmission Parts. Inc.

PART #	OVERHAUL KITS	QTY	REFERENCE #
255002A	Overhaul Kit, AWTF80SC (AF40) 2006-Up (Duraprene) (For Bonded Pistons Sell 255964AK)	1	
255002AX	Overhaul Kit, AWTF80SC (AF40) 2006-Up (Without Pan Gasket)(For Bonded Pistons Sell 255964AK)	1	
255002B	Overhaul Kit, AWTF81SC (AF21) 2005-Up (Duraprene) (For Bonded Pistons Sell 255964AK)	1	
255002C	OHK, AWTF80SD (AF40) 2011-Up	1	

PART #	MASTER L/STEELS KIT	QTY	REFERENCE #
255004A	Master L/Steels Kit, AWTF81SC 2005-Up (For Bonded Pistons Sell 255964AK)	1	
255004B	Master L/Steels Kit, AWTF80SC 2006-Up (For Bonded Pistons Sell 255964AK)	1	

PART #	MASTER W/STEELS KIT	QTY	REFERENCE #
255006A	Master W/Steels Kit, AWTF81SC 2005-Up (For Bonded Pistons Sell 255964AK)	1	
255006B	Master W/Steels Kit, AWTF80SC 2006-Up (For Bonded Pistons Sell 255964AK)	1	

PART #	FILTERS	QTY	REFERENCE #
255010A	Filter, TF-80SC/TF-81SC (Ford) 2005-Up	1	

PART #	BANDS	QTY	REFERENCE #
255024A	Band, TF-80SC/TF-81SC(AF40) B1 Brake (2 3/8" Wide) (Split) 2005-Up	1	

PART #	BUSHINGS	QTY	REFERENCE #
255030A	Bushing Kit, TF-81SC 2005-Up	1	
255034A	Bushing, TF-81SC Pump Body (1.850"ID)(W/Oil Pockets) 2005-Up	1	
255036A	Bushing, TF-81SC Pump Stator (Front)(.660"Wide, .990"ID) (Brass) 2005-Up	1	
255056A	Bushing, TF-81SC Rear Sun Gear (Front)(.520"Wide, 1.078"OD, .955"ID)(Brass W/Oil Pockets) 2005-Up	1	
255056A-1	Bushing, TF-81SC Rear Sun Gear (Rear)(.500"Wide, 1.078"OD, .955"ID)(Brass W/Oil Pockets) 2005-Up	1	
255057A	Bushing, TF-81SC Rear Planet Front Sun Gear (Front Bushing)(.425"Wide, 1.432"OD, 1.308"ID) (Brass W/Oil Pockets) 2005-Up	1	
255057A-1	Bushing, TF-81SC Rear Planet Front Sun Gear (Rear Bushing)(.630"Wide, 1.365"OD, 1.308"ID) (Brass W/Oil Pockets) 2005-Up	1	
255058A	Bushing, TF-81SC Rear Planet (Front)(.620"Wide, 1.875"OD, 1.721"ID)(Brass W/Oil Pockets) 2005-Up	1	

PART #	METAL CLAD SEALS	QTY	REFERENCE #
255070A	Seal, TF-81SC Front (2.475"OD, 1.820"ID) 2005-Up	1	
255072A	Seal, TF-81SC Manual Lever (.280"Thick, .875"OD, .435"ID) 2005-Up	1	
255076A	Seal, TF-81SC Axle (Bell Housing Side)(3.115"OD)(1.670"ID) 2005-Up (Fits Fusion, Milan, MKX & Zephyr)	1	
255076AA	Seal, TF-81SC Axle (Bell Housing Side)(2.474"OD) 2005-09 (All Except Fusion, Milan, MKZ & Zephyr)	1	
255077A	Seal, TF-81SC Axle (Case Side) (2.485"OD)(1.645"ID) 2005-Up (Fits Fusion, Milan, MKZ & Zephyr)	1	
255077AA	Seal, TF-81SC Axle (Case Side)(2.954"OD) 2005-09 (All Except Fusion, Milan, MKZ & Zephyr)	1	
255077AB	Seal, TF-80SC Axle (Case Side) 2005-09	1	
255077AC	Seal, TF-80SC Axle (Case Side)(2.173"OD)(1.310"ID) 2005-Up (Except Volvo)	1	
255077AD	Seal, TF-80SC Axle (Case Side)(Volvo Only) 2006-Up	1	

PART #	FRICTIONS	QTY	REFERENCE #
255104A	Friction, TF-81SC 1-2-3-4 Clutch (.065")(54 Teeth)(6 3/16"OD) 2005-Up	6	
255106A	Friction, TF-81SC 3-5 Reverse Clutch (.065")(54 Teeth)(6 1/2"OD) 2005-Up	4	
255108A	Friction, TF-81SC 4-5-6 Clutch (.065")(55 Teeth)(6 5/16"OD) 2005-Up	3	
255114A	Friction, TF-81SC Low/Reverse Clutch (.063")(60 Teeth)(7 1/4"OD) 2005-Up	6	
255119A	Friction Module, TF-81SC 2005-Up	1	
255119B	Friction Module, TF-80SC(AF40) 2006-Up	1	

PART #	STEELS	QTY	REFERENCE #
255124A	Steel, TF-81SC 1-2-3-4 Clutch (.070")(40 Teeth)(5.555"ID) 2005-Up	6	
255126A	Steel, TF-81SC 3-5 Reverse Clutch (.091")(36 Teeth)(5.560"ID) 2005-Up	4	

© Whatever It Takes Transmission Parts. Inc.

255128A .....Steel, TF-81SC 4-5-6 Clutch (.070")(36 Teeth)(5.635"ID) 2005-Up .....3 .....
255134A .....Steel, TF-81SC Low/Reverse Clutch (.068")(14 Teeth)(6 13/16"ID) 2005-Up.....5 .....
255139A .....Steel Module, AWTF80SC/AWTF81SC (AF21) 2005-Up.....1 .....

PART #	PRESSURE PLATES	QTY	REFERENCE #

255144A .....Pressure Plate, TF-81SC 1-2-3-4 Clutch (.131")(40 Teeth)(5.560"ID)(Stepped) 2005-Up.....1 .....
255146A .....Pressure Plate, TF-81SC 3-5 Reverse Clutch (.121")(36 Teeth)(5 9/16"ID)(Stepped) 2005-Up.....1 .....
255148A .....Pressure Plate, TF-81SC 4-5-6 Clutch (.121")(36 Teeth)(5 5/8"ID)(Stepped) 2005-Up.....1 .....
255154A .....Pressure Plate, TF-81SC Low/Reverse Clutch (Top)(.205")(14 Teeth)(6 13/16"ID) 2005-Up.....1 .....
255155A .....Apply Plate, TF-81SC Low/Reverse Clutch (Bottom)(.141")(14 Teeth)(6 13/16"ID)(Stepped)
.....2005-Up .....1 .....

PART #	VALVE BODY KITS	QTY	REFERENCE #

T255165A.....Shift Kit, AWTF81SC (AF21) (Ford & Mazda) 2005-Up (Transgo).....1 .....

PART #	SEALING RINGS	QTY	REFERENCE #

255175AT .....Ring Kit, TF-81SC (Teflon) 2005-Up .....1 .....
255179AT .....Ring, TF-81SC 3-5 Reverse Clutch (Stator)(.090"Wide, 2.020"OD)(Teflon) 2005-Up .....1 .....
255181AT .....Ring, TF-81SC 4-5-6 Clutch (Sets In Case)(.089"Wide, 1.855"OD)(Teflon) 2005-Up .....2 .....
255183AT .....Ring, TF-81SC Input Shaft (Rear) To 1-2-3-4 Clutch Drum (.090"Wide. 1.360"OD)(Teflon)
.....2005-Up .....2 .....
255184AT .....Ring, TF-81SC Front Planet Ring Gear Input Shaft To Stator (.089"Wide, 1.140"OD)(Teflon)
.....2005-Up .....3 .....

PART #	WASHERS & BEARINGS	QTY	REFERENCE #

255209A .....Caged Needle Bearing, TF-81SC Stator (Rear)(.475"Wide, 1.340"OD)(37 Needles) 2005-Up.....1 .....
255211A.....Washer, TF-81SC Stator To 3-5 Reverse Drum (.046"Thick, 2.530"OD)(1 Tab, Plastic) 2005-Up..1 .....
255219A .....Caged Needle Bearing, TF-81SC 1-2-3-4 Clutch Drum (.500"Thick, 1.360"OD, 1.185"ID)
.....(Cast # NSK D8503020W) 2005-Up .....1 .....
255220A .....Race, TF-81SC 1-2-3-4 Clutch Drum To Drive Shell (.060"Thick, 1.845"OD, 1.390"ID) 2005-Up ..1 .....
255221A .....Bearing W/Race, TF-81SC 1-2-3-4 Clutch Drum To Drive Shell (.110"Thick, 1.790"OD, 1.310"ID)
.....2005-Up .....1 .....
255229A .....Caged Needle Bearing, TF-81SC 3-5 Reverse Drum (.630"Wide)(Cast # NSK 00504607WA)
.....2005-Up .....1 .....
255230A .....Washer, TF-81SC 3-5 Reverse Clutch Drum To Front Planet (.166"Thick, 3.980"OD, 2.965"ID)
.....(3 Hollow Legs)(Plastic) 2005-Up .....1 .....
255231A .....Bearing W/Races, TF-81SC 4-5-6 Clutch Drum To Case (.160"Thick, 2.945"OD, 1.990"ID)
.....2005-Up .....1 .....
255233A .....Caged Needle Bearing, TF-81SC 4-5-6 Clutch Drum Pilot To Case (.525"Thick, .865"OD)
.....(Presses Into Case)(Cast # DB501608W) 2005-Up .....1 .....
255238A .....Washer, TF-81SC Front Planet To Front Ring Gear (.047"Thick, 3.345"OD, 2.875"ID)(3 Tab)
.....2005-Up .....1 .....
255241A .....Bearing W/Race, TF-81SC Front Planet Sun Gear To Ring Gear (.170"Thick, 2.400"OD, 1.730"ID)
.....2005-Up .....1 .....
255242A .....Race, TF-81SC Bearing # 241 To Front Planet Ring Gear (2.703"OD, 1.850"ID) 2005-Up.....1 .....
255243A .....Bearing W/Race, TF-81SC Front Planet Ring Gear To 1-2-3-4 Clutch Drum (.110"Thick,
.....2.065"OD, 1.545"ID) 2005-Up.....1 .....
255244A .....Race, TF-81SC Bearing # 243 To 1-2-3-4 Clutch Drum (.032"Thick, 1.905"OD, 1.508"ID)
.....2005-Up .....1 .....
255246A .....Race, TF-81SC Rear Sun Gear To 4-5-6 Clutch Drum (Front)(.031"Thick, 1.712"OD, 1.015"ID)
.....2005-Up .....1 .....
255247A .....Bearing, TF-81SC Rear Sun Gear To 4-5-6 Clutch Drum (.137"Thick, 1.715"OD, .960"ID)
.....(19 Rollers) 2005-Up.....1 .....
255248A .....Race, TF-81SC Rear Sun Gear To 4-5-6 Clutch Drum (Rear)(.032"Thick, 1.635"OD, .960"ID)
.....2005-Up .....1 .....
255250A .....Washer, TF-81SC Rear Planet To 4-5-6 Clutch Drum (.230"Thick, 4.105"OD, 2.638"ID)(6 Hollow
.....Legs)(Plastic) 2005-Up .....1 .....
255251A .....Bearing W/Race, TF-81SC Rear Planet To Rear Sun Gear (.130"Thick, 1.910"OD, 1.383"ID)
.....2005-Up .....1 .....
255252A .....Race, TF-81SC Rear Planet To Rear Sun Gear (.032"Thick, 1.790"OD, 1.315"ID) 2005-Up.....1 .....
255254A .....Washer, TF-81SC Support To Rear Planet (.049"Thick)(3.142"OD)(2.685"ID)(3 Tab, Brass)
.....2005-Up .....1 .....
255273A .....Cup Race, TF-81SC Pinion Shaft To Case (.940"Thick, 2.780"OD) (Cast # NSK NTF-R33-5g)
.....2005-Up .....1 .....
255274A .....Cone Bearing, TF-81SC Pinion Shaft To Case (1.300"ID)(19 Rollers) (Cast # NSK NTF R33-5g)
.....2005-Up .....1 .....

© Whatever It Takes Transmission Parts. Inc.

PART #	WASHERS & BEARINGS (Continued)	QTY	REFERENCE #
255276A	Shim, TF-81SC Pinion Brg To Case (Selective)(2.755"OD, 2.245"ID) 2005-Up	1	
255277A	Lock Washer, TF-81SC Under # 795 Nut (.039"Thick, 2.585"OD) 2005-Up	1	
255278A	Cup Race, TF-81SC Support To Drive Transfer Gear (Both Sides)(.382"Thick, 3.665"OD) (Cast # NSK R68-2) 2005-Up	2	
255279A	Cone Bearing, TF-81SC Support To Drive Transfer Gear (Both Sides)(2.675"ID)(41 Rollers) (Cast # NSK R68-1) 2005-Up	2	
255280A	Cup Race, TF-81SC Bell Housing To Pinion (.590"Thick, 3.700"OD) (Cast # NSK NTF R41Z-24g) 2005-Up	1	
255281A	Cone Bearing, TF-81SC Bell Housing To Pinion (25 Rollers)(1.640"ID) (Cast # NSK NTF R41Z-24Aag) 2005-Up	1	
255288A	Cup Race, TF-81SC Differential To Case (.745"Thick, 3.625"OD) (Cast # KOYO ST6292) 2005-Up	1	
255289A	Cone Bearing, TF-81SC Differential To Case (2.420"ID)(29 Rollers) (Cast # KOYO ST6292) 2005-Up	1	
255290A	Shim, TF-81SC Differential Bearing To Case (Selective) (3.590"OD, 1.895"ID) 2005-Up	1	
255291A	Cup Race, TF-81SC Bell Housing To Differential (.740"Thick, 3.700"OD) (Cast # KOYO ST 5994) 2005-Up	1	
255292A	Cone Bearing, TF-81SC Bell Housing To Differential (2.320"ID)(24 Rollers) (Cast # KOYO ST 5994) 2005-Up	1	
255294A	Caged Needle Bearing, TF-81SC Manual Shaft (.925"Long, .785"OD)(11 Needles) 2005-Up	1	

PART #	GASKETS & RUBBER COMPONENTS	QTY	REFERENCE #
255301A	Gasket, TF-81SC Side Pan (12 Bolt Holes) 2005-Up	1	
255347A	Lathe Cut Seal, TF-81SC Case Connector To Case (.150"Thick, 1.370"OD) 2005-Up	1	
255347A-1	O-Ring, TF-81SC Case Connector To TCM (.095"Thick, 1.295"OD, 1.095"ID) 2005-Up	1	

PART #	ELECTRICAL COMPONENTS	QTY	REFERENCE #
255421A	Solenoid, TF-81SC Shift A (1.630"Long)(Black Connector) 2005-Up (Also Fits Shift B # 422 2005-Up)	1-2	
255422A	Use U255421A	1	
255423A	Solenoid, TF-81SC Shift C (3.330"Long)(Black Connector) (Cast # 11BN4M08960) 2005-Up	1	
255425A	Solenoid, TF-81SC TCC (3.255" Long)(Grey Connector)(Cast # 12CJ4M04741) 2005-Up	1	
S21425A-4	Retainer, AWTF80SC/AWTF81SC Solenoid Connector (Use On Broken Connectors To Hold The Wire Harness On)(Sonnax)	1	
255426A	Solenoid, TF-81SC Shift E (3.330"Long)(Black Connector) (Cast # 10C44M07211) 2005-Up	1	
255427A	Solenoid, TF-81SC Shift D (3.340"Long)(Grey Connector) (Cast # 14BM4M15382) 2005-Up	1	
255428A	Solenoid, TF-81SC Line Pressure (3.330"Long)(Grey Connector)(Cast # 14BM4L11834) 2005-Up	1	
255436A	Sensor, TF-81SC Output (2 Blade Brown Connector)(13" Wire Harness) 2005-Up	1	
255438A	Sensor, TF-81SC Input (2 Blade White Connector)(11" Wire Harness) 2005-Up	1	
255440A	Solenoid, TF-81SC Shift F (3.320"Long)(Black Connector) (Cast # 14CD4L12494) 2005-Up	1	
255446A	Wire Harness, TF-81SC Internal (20 Pin TCM Connector, With 10 Two Prong Connectors & 1 Temp Sensor) 2005-Up	1	
255465A	TCM, TF-81SC W/Neutral Safety Switch (20 Pin Round Connector To Case)(12 Pin W/4 Blade Rectangle Connector To External Wire Harness)(3 Bolts To Case) 2005-Up	1	

PART #	MISCELLANEOUS COMPONENTS	QTY	REFERENCE #
255490A	Vent, TF-81SC Case (Plastic, Push-In)(2"Long) 2005-Up	1	
255492A	Drain Plug, TF-81SC On Bottom Of Bell Housing (Allen Head, 1.005"OD, .605"Tall)(W/Magnet Inside) 2005-Up	1	
255494A	Filler Plug, TF-81SC On Top Of The Case (Torx Head, 1.005"OD, .620"Tall) 2005-Up	1	

PART #	HARDPARTS	QTY	REFERENCE #
255500A	Pump Assembly, TF-81SC (9 Lobes On Inner Gear, .437"Thick) 2005-Up	1	
255510A	Pump Body W/Gears, TF-81SC (9 Lobes On Inner Gear W/2 Inner lugs, .437"Thick) 2005-Up	1	
255520A	Stator, TF-81SC (4 1/2"Long Shaft) 2005-Up	1	
255530A	Pump Gears, TF-81SC (9 Lobes On Inner Gear With 2 Inner) 2005-Up	1	
255552A	Drum, TF-81SC 1-2-3-4 Clutch (6 9/16"OD, 2.470"Tall) (1.750"OD Hub)(No Notches Around OD Of Hub On The Clutch Side) 2005-Up	1	
255552AA	Drum, TF-81SC 1-2-3-4 Clutch (6 9/16"OD, 2.470"Tall) (1.750"OD Hub)(No Notches Around OD Of Hub On The Clutch Side) 2005-Up	1	
255552AAK	Drum Kit, TF-80SC/TF-81SC 1-2-3-4 (K1) 2005-Up (Contains: 550AA, 962, 972, & 972-1)	1	
255554A	Drum With Shaft, TF-81SC 4-5-6 Clutch (.952"OD Of Shaft)(3 Clutch) 2005-Up	1	
255554AA	Drum W/Shaft, TF-81SC 4-5-6 Clutch (.952"OD Of Shaft)(4 Clutch) 2005-Up	1	

© Whatever It Takes Transmission Parts. Inc.

255555A.....Drum, TF-81SC 3-5 Reverse Clutch (4 Clutch)(3.050"Tall)(6 15/16"OD)(2.010"ID Ring Bore)
.....(Uses A Piston Without Spring Pockets) 2005-Up .....1 .....
255555AA.....Drum, TF-81SC 3-5 Reverse Clutch (4 Clutch)(3.050" Tall)(6 15/16"OD)(2.010"ID Ring Bore)
.....(Uses A Piston With Spring Pockets) 2005-Up .....1 .....
255562A.....Piston Kit, TF-81SC 1-2-3-4 Clutch (Bonded) (Piston Does Not Have Spring Pockets For
.....Springs) 2005-Up .....1 .....
255562AA.....Piston Kit, TF-81SC 1-2-3-4 Clutch (Bonded)(Piston Has Spring Pockets For Springs) 2005-Up .1 .....
255564A.....Piston Kit, TF-81SC 4-5-6 Clutch (Bonded) 2005-Up .....1 .....
255565A.....Piston Kit, TF-81SC 3-5 Reverse Clutch (Bonded Retainer)(Piston Does Not Have Spring
.....Pockets) 2005-Up .....1 .....
255565AA.....Piston Kit, TF-81SC 3-5 Reverse Clutch (Bonded Retainer)(Piston Has Spring Pockets)
.....2005-Up .....1 .....
255567A.....Piston Kit, TF-81SC Low/Reverse Clutch 2005-Up .....1 .....
255582A.....Planet, TF-81SC Front (3 Gear, Steel)(Uses A 45 Teeth Sun Gear) (2 1/4"Wide, 5 1/2"OD)
.....2005-Up .....1 .....
255582AB.....Planet, TF-81SC Front (5 Gear, Steel)(Uses A 45 Teeth Sun Gear) 2005-Up .....1 .....
255584A.....Planet, TF-81SC Rear (W/33 Teeth Sun Gear)(2.180"Wide, 2.495"OD) (1.720"OD Hub) 2005-Up
.....(The 33 Teeth Sun Gear Stays In Planet) .....1 .....
255592A.....Ring Gear W/Input Shaft, TF-81SC Front Planet (81 Teeth)(5.165"OD)(7 1/4"Long Shaft,
.....W/23 Splines) 2005-Up .....1 .....
255594A.....Ring Gear, TF-81SC Rear Planet (72 Teeth)(1.725"Wide, 5.530"OD) 2005-Up .....1 .....
255604A.....Hub, TF-81SC Rear Planet Ring Gear (.470"Thick, 5.110"OD) 2005-Up .....1 .....
255612A.....Sun Gear, TF-81SC Front Planet (45 Teeth)(.708"Thick, 2.705"OD) 2005-Up .....1 .....
255614A.....Sun Gear, TF-81SC Rear Planet (Rear)(27 Teeth)(4.145"Long, 2.065"OD) 2005-Up .....1 .....
255624A.....Drive Shell, TF-81SC (1.710"Thick, 6 13/16"OD)(2.045"OD Hub)(36 Outer Teeth) 2005-Up.....1 .....
255632A.....Support, TF-81SC Drive Transfer Gear (1.657"Tall, 2.095"ID)(6 Bolt, Cast Iron) 2005-Up.....1 .....

PART #	SPRAGS	QTY	REFERENCE #

255654A.....Sprag, TF-81SC Low/Reverse (20 Rollers, W/Plastic Cage, W/5 Brass Spacers)(6 7/8"OD)
.....2005-Up .....1 .....
255665A.....Outer Race, TF-81SC Low/Reverse Sprag (.805"Thick, 7 3/4"OD, 6 1/2"ID)(13 Outer Lugs)
.....2005-Up .....1 .....

PART #	HARDPARTS (Continued)	QTY	REFERENCE #

255698A.....Oil Baffle, TF-81SC Bell Housing To Differential (3 Bolt Tin) 2005-Up .....1 .....
255710A.....Gear, TF-81SC Drive Transfer (51 Teeth)(1.327"Thick, 5.620"OD, 3.655"ID) 2005-Up.....1 .....
255712A.....Gear, TF-81SC Driven Transfer (50 Teeth)(15 Park Lugs) 2005-Up .....1 .....
255715A.....Differential Assembly, TF-81SC (W/53 Teeth Ring Gear)(7 1/8" Tall)(24 Roller Bearing On Bell
.....Housing Side & 29 Roller Bearing On Case Side)(FWD) 2005-Up.....1 .....
255715AA.....Differential Assembly, TF-81SC (With 53 Teeth Ring Gear)(7 1/8" Tall)(27 Roller Bearing On Bell
.....Housing Side & 29 Roller Bearing On Case Side)(FWD) 2005-Up.....1 .....
255715B.....Differential Assembly, TF-80SC/TF81SC (W/53 Teeth Ring Gear)(7 1/2" Tall)(AWD) 2005-Up.....1 .....
255716A.....Differential Housing, TF-81SC (Less Ring Gear)(16 Bolt Holes)(7"Tall)(24 Roller Bearing On
.....Bell Housing Side & 29 Roller On Case Side)(FWD) 2005-Up .....1 .....
255716AA.....Differential Housing, TF-81SC (Less Ring Gear)(16 Bolt Holes)(7" Tall)(27 Roller Bearing On
.....Bell Housing Side & 29 Roller On Case Side)(FWD) 2005-Up .....1 .....
255716B.....Differential Housing, TF-80SC/TF81SC (Less Ring Gear)(16 Bolt Holes)(AWD) 2005-Up .....1 .....
255720A.....Ring Gear, TF-81SC Differential (53 Teeth)(1.715"Thick, 8 1/8"OD) 2005-Up .....1 .....
255730A.....Pinion, TF-81SC (15 Teeth)(6 1/2" Long) 2005-Up .....1 .....
255740A.....Valve Body, TF-81SC (Ford/Mazda) 8 Solenoid (Cast # 5G13-7Z488-8A)(Cast # A1, A2, Or A3
.....On Separator Plate) .....1 .....
255740AA.....Valve Body, TF-81SC (Ford/Mazda) 8 Solenoid (Cast # 5G13-7Z488-AA)(Cast # A4 Or A5 On
.....The Separator Plate).....1 .....
255740C.....Valve Body, TF-80SC (Volvo) .....1 .....

PART #	VALVE BODY PARTS	QTY	REFERENCE #

255741A-1.....Manual Valve, TF-81SC (4.500" Long)(3 Lands) 2005-Up .....1 .....
S255741R.....Boost Valve Kit, TF-80SC/TF-81SC (Contains Valve & Sleeve)(Sonnax).....1 .....

PART #	HARDPARTS (Continued)	QTY	REFERENCE #

255750A.....Bell Housing, TF-81SC (3 1/4" Top Bolts)(Starter At 11:00)(5 1/2"Thick) 2005-Up.....1 .....
255750AA.....Bell Housing, TF-81SC (3 1/4" Top Bolts)(Starter At 11:00)(Has 4 Non Threaded Bosses Around
.....Seal)(2.950" Seal OD)(Cast # 9253).....1 .....
255750B.....Bell Housing, TF-81SC (2 3/4" Top Bolts)(Square Starter Hole At 11:00) Round Bell
.....(Cast # TFE19 Inside Bell)(AWD)(With 3 Threaded Bosses And 2 Smooth Bolt Holes).....1 .....

© Whatever It Takes Transmission Parts. Inc.

PART #	HARDPARTS (Continued)	QTY	REFERENCE #
255760A	Case, TF-81SC (Ford) 2WD (Metal Tag # TF-81SC)(4 Non Threaded Bosses Around Seal) (Seal OD Is 2.950") 2005-Up	1	
255760AA	Case, TF81SC (Ford) 2WD (Metal Tag #TS81-SC)(No Bosses Around Seal)(Seal OD Is 2.482") 2005-Up		
255766A	Pan, TF-81SC Side (12 Bolt) 2005-Up	1	
255776AK	Bolt Set, TF-81SC Bell Housing To Case (23 Pieces) 2005-Up	1	
255777AK	Bolt Set, TF-81SC Pump To Case (7 Pieces) 2005-Up	1	
255778AK	Bolt Set, TF-81SC Pump Body To Stator (8 Pieces) 2005-Up	1	
255783AK	Bolt Set, TF-81SC Drive Transfer Gear Support To Case (6 Pieces) 2005-Up	1	
255786AK	Bolt Set, TF-81SC Differential Ring Gear (12 Pieces) 2005-Up	1	
255791AK	Bolt Set, TF-81SC Valve Body To Case (8 Pieces) 2005-Up	1	
255795A	Nut, TF-81SC Holds Drive Transfer Gear To Support (2.500"ID)(24 Outer Notches) 2005-Up	1	
255843A	Clip, TF-81SC Holds Internal Wire Harness To Case (1.275"Wide)(W/2 Eyelets) 2005-Up	1	
255843A-1	Bracket, TF-81SC Holds Solenoid Retaining Pins In Valve Body (2 Bolt) 2005-Up	1	
255873A	Snap Ring, TF-81SC Holds 1-2-3-4 Clutch Pressure Plate In Drum (.062"Thick, 6 11/16"OD) 2005-Up	1	
255874A	Snap Ring, TF-81SC Holds 1-2-3-4 Clutch Return Spring In (.059"Thick, 2.085"OD) 2005-Up	1	
255876A	Snap Ring, TF-81SC Holds 4-5-6 Clutch Pressure Plate In Drum (.062"Thick, 6 3/4"OD) 2005-Up	1	
255877A	Snap Ring, TF-81SC Holds 4-5-6 Clutch Retainer In (.048"Thick, 2.270"OD) 2005-Up	1	
255878A	Snap Ring, TF-81SC Holds 3-5 Reverse Clutch Pressue Plate In (.063"Thick, 7"OD) 2005-Up	1	
255879A	Snap Ring, TF-81SC Holds 3-5 Reverse Clutch Retainer/Piston In (.058"Thick, 2.360"OD) 2005-Up	1	
255885A	Snap Ring, TF-81SC Holds Low/Reverse Clutch Pressure Plate In Case (.079"Thick, 7 11/16"OD) 2005-Up	1	
255886A	Snap Ring, TF-81SC Holds Low/Reverse Clutch Spring Retainer In Case (.048"Thick, 7 7/8"OD) 2005-Up	1	
255887A	Snap Ring, TF-81SC Holds Low/Reverse Sprag Outer Race To Case (.048"Thick, 7 3/4"OD) 2005-Up	1	
255889A	Snap Ring, TF-81SC Holds Rear Planet Ring Gear Hub To Ring Gear (.047"Thick, 5.520"OD) 2005-Up	1	
255896A	Snap Ring, TF-81SC Holds B1 Brake Servo In Case (.072"Thick, 2.590"OD)(W/2 Eyelets) 2005-Up	1	
255897A	Snap Ring, TF-81SC Holds # 278 Outer Races Apart (.098"Thick, 3.855"OD) 2005-Up	1	
255898A	Snap Ring, TF-81SC Holds Rear Planet Ring Gear Hub # 604 To Drive Transfer Gear (.054"Thick, 4.435"OD)(Curved Ends) 2005-Up	1	
255910A	Servo Assembly, TF-81SC B1 Brake (3 Groove Pin) 2005-Up	1	
255911A	Spring, TF-81SC B1 Brake Servo (2.885"Long, 1.030"OD) 2005-Up	1	
255912A	Piston, TF-81SC B1 Brake Servo (2.080"OD)(W/3 Groove Pin, 4.087"Long) 2005-Up	1	
255914A	Cover, TF-81SC B1 Brake Servo (2.415"OD, 2.085"ID, 1.960"Tall) 2005-Up	1	
255915A-3	Band Anchor, TF-81SC (Screw-In, 1.440"Long) 2005-Up	1	
255962A	Piston, TF-80SC/TF-81SC 1-2-3-4 (K1) Clutch (.815"Thick, 6 1/8"OD, 2.085"ID) 2005-Up	1	
255964A	Piston, TF-81SC 4-5-6 Clutch (Bonded)(1.065"Tall, 6 3/16"OD 2.250"ID) 2005-Up	1	
255964AK	Piston Kit, TF-80SC/TF-81SC (Bonded) 2005-Up (Contains: # 964, 982A, 984A & 985A)	1	
255965A	Piston, TF-81SC 3-5 Reverse Clutch (.720"Thick)(2.385"ID)(Steel)(12 Outer Lugs) Does Not Have Spring Pockets 2005-Up	1	
255965AA	Piston, TF-81SC Reverse Clutch (.720" Thick)(2.385"ID)(Steel)(12 Outer Lugs) Has Spring Pocket 2005-Up	1	
255967A	Piston, TF-81SC Low/Reverse Clutch (Aluminum)(1.850"Thick, 5.480"ID) 2005-Up	1	
255972A	Spring W/Retainer, TF-81SC 1-2-3-4 Clutch Return (4.060"OD, 3.065"ID)(22 Springs) 2005-Up	1	
255972A-1	Retainer, TF-81SC 1-2-3-4 Clutch Return Spring (4.060"OD, 3.155"ID)(22 Holes) 2005-Up	1	
255972AK	Spring W/Retainer Kit, TF-80SC/TF-81SC 1-2-3-4 (K1) Clutch Return 2005-Up (Contains: 972A & 972A-1)	1	
255974A	Spring W/Retainer, TF-81SC 4-5-6 Clutch Return (4.330"OD, 3.495"ID)(28 Springs) 2005-Up	1	
255974A-1	Retainer, TF-81SC 4-5-6 Clutch Return Spring (4.195"OD, 3.595"ID)(28 Holes) 2005-Up	1	
255975A	Spring/Retainer, TF-81SC 3-5 Reverse Clutch Return (28 Springs)(4.155"OD, 3.300"ID) 2005-Up	1	
255975A-1	Retainer Plate, TF-81SC 3-4 Reverse Clutch Return Spring (28 Holes)(4.100"OD, 3.380"ID) 2005-Up	1	
255977A	Spring W/Retainer, TF-81SC Low/Reverse Clutch Return (.750"Thick, 7 5/8"OD, 6 3/4"ID) (14 Springs) 2005-Up	1	
255982A	Retainer/Piston, TF-81SC 1-2-3-4 Clutch (Bonded)(.420"Thick, 4.925"OD, 1.905"ID) 2005-Up	1	
255984A	Retainer/Piston, TF-81SC 4-5-6 Clutch Spring (Bonded)(4.660"OD, 2.215"ID) 2005-Up	1	
255985A	Retainer/Piston, TF-81SC 3-5 Reverse Clutch Spring (Bonded)(5.050"OD, 2.315"ID) 2005-Up	1	
255995A	Park Pawl Assembly, TF-81SC (Ford) 2005-Up	1	
255999A	Oil Tube Set, TF-81SC (2 Tubes) 2005-Up	1	

© Whatever It Takes Transmission Parts. Inc.

Technical Bulletin # 1348

Transmission: *TF-81SC/AWF-21/AW6AEL*
Subject: *Presssure Tap Identification and Specifications*
Application: *Ford, Volvo, Mazda*
Issue Date: *October, 2010*

TF-81SC/AWF-21/AW6AEL

Pressure Tap Locations and Specifications

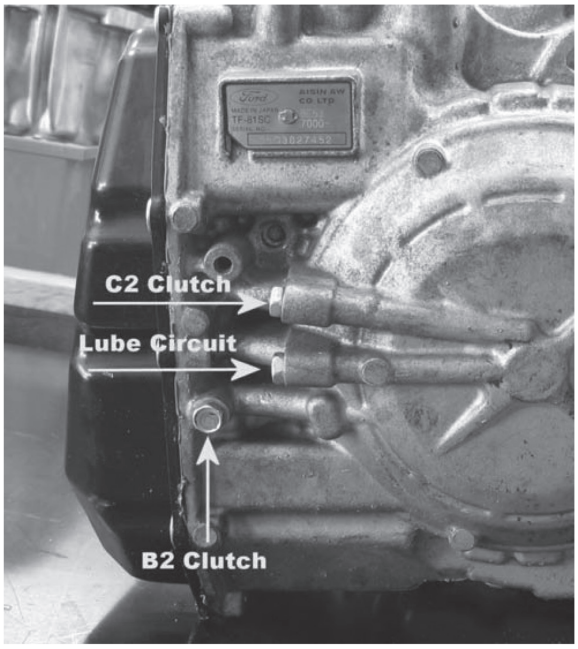

Clutch	Range	Pressure
C1	Drive (1st-4th)	28-199 psi.
C2	Drive (4th-6th)	28-199 psi.
C3	Drive (3rd-5th)	28-199 psi.
C3	Reverse	57-270 psi.
B2	Low/M1	85-199 psi.
B2	Reverse	57-270 psi.

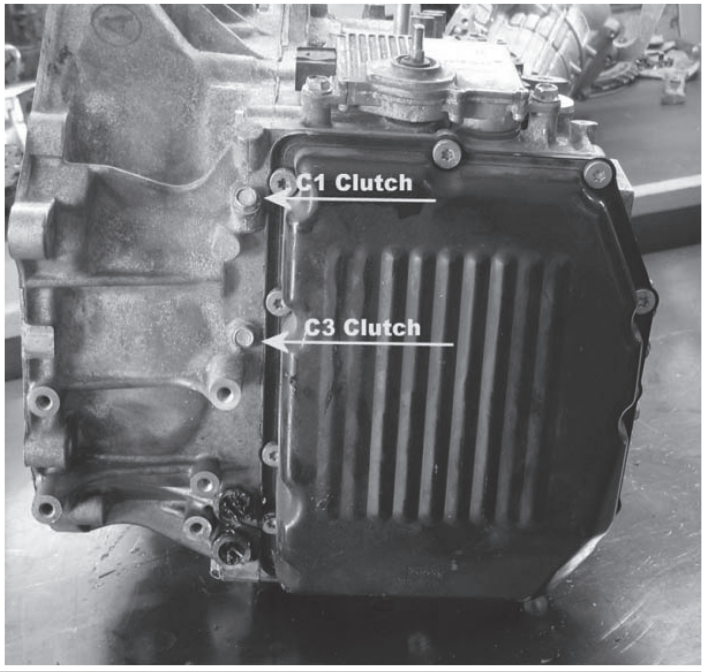

FORD

Copyright © 2010 ATRA. All Rights Reserved.

© Whatever It Takes Transmission Parts. Inc.

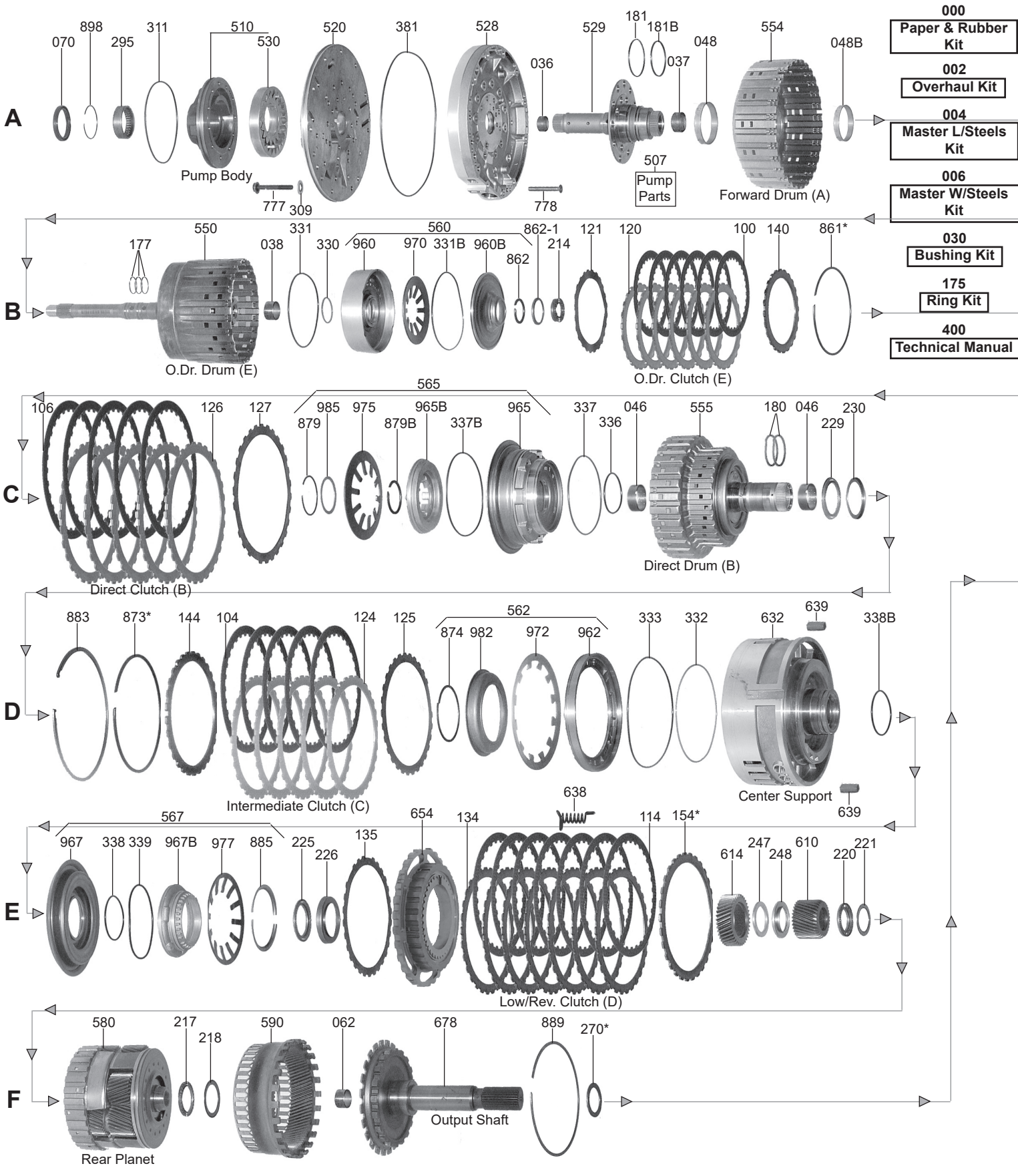

FORD

© Whatever It Takes Transmission Parts. Inc.

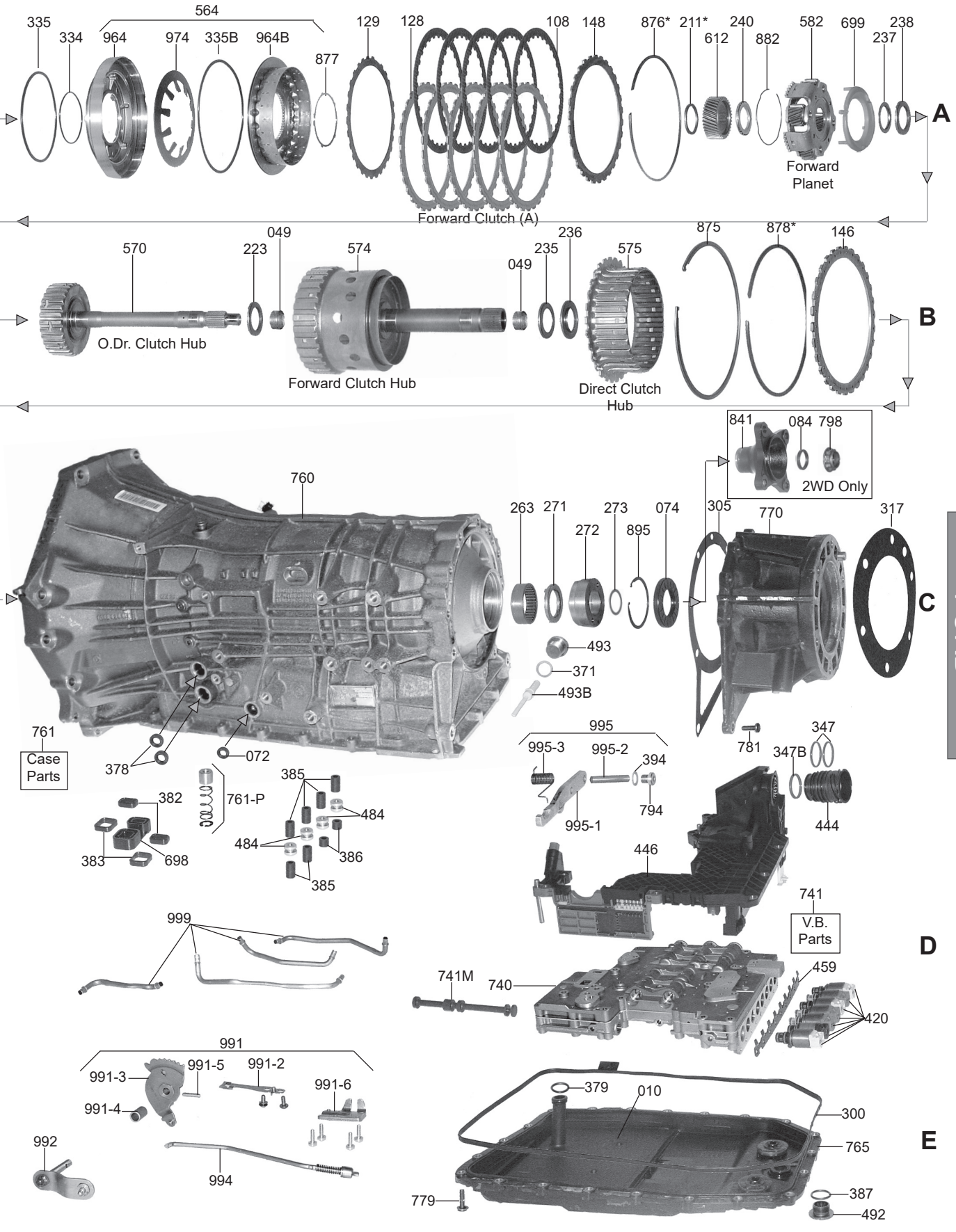

1-800-940-0197

© Whatever It Takes Transmission Parts. Inc.

PART #	PAPER & RUBBER KIT	QTY	REFERENCE #
49000A	Paper & Rubber Kit, ZF6HP26 (Ford) 2005-Up	1	

PART #	OVERHAUL KIT	QTY	REFERENCE #
49002A	Overhaul Kit, ZF6HP26 (All) 2002-Up	1	
49002B	Overhaul Kit, ZF6HP26/ZF6HP26X/ZF6HP28/ZF6HP28X (BMW/Jaguar) 2002-Up	1	
49002C	Overhaul Kit, 6R60/6R75 2006-Up	1	
49002D	Overhaul Kit, ZF6HP26A (Audi/VW) (AWD) 2004-Up	1	
49002F	Overhaul Kit, 6R80 2008-13	1	

PART #	MASTER L/STEELS KIT	QTY	REFERENCE #
49004A	Master L/Steels Kit, ZF6HP26 (Ford) 2005-Up	1	
49004B	Master L/Steels Kit, ZF6HP26/ZF6HP26X/ZF6HP28/ZF6HP28X (BMW/Jaguar) 2002-Up	1	
49004C	Master L/Steels Kit, 6R60/6R75 2006-Up	1	
49004F	Master L/Steels Kit, 6R80 2009-13	1	

PART #	MASTER W/STEELS KIT	QTY	REFERENCE #
49006A	Master W/Steels Kit, ZF6HP26 (All) 2002-Up	1	
49006B	Master W/Steels Kit, ZF6HP26/ZF6HP26X/ZF6HP28/ZF6HP28X (BMW/Jaguar) 2002-Up	1	
49006C	Master W/Steels Kit, 6R60/6R75 2006-Up	1	
49006F	Master W/Steels Kit, 6R80 2009-13	1	

PART #	FILTERS	QTY	REFERENCE #
49010A	Use 49765A	1	
49010C	Filter, 6R60 2006 (Also Fits ZF6HP26 Units Ending In 082/122/134/151/181/190/197/201/203/204/205/206/207/208)(Also Fits ZF6HP26X Units Ending In 011/014/018/039/061/068/072/074)(Also Fits ZF6HP28 Units Ending In 016)	1	6L2Z-7A098-AA
49010D	Filter, ZF6HP26A (Audi/VW)(4WD) 2004-Up (3 1/2" Long Neck)(Rectangle Pickup)	1	
49010E	Filter, 6R75/6R80 (With 1 9/16" Long Round Pick-Up Tube) 2007-Up	1	
49010EA	Filter, 6R80 (1 1/16" Long Round Pick-Up Tube) 2010-Up	1	

PART #	BUSHINGS	QTY	REFERENCE #
49030A	Bushing Kit, ZF6HP26/ZF6HP28/6R60/6R80 (All) 2002-Up (Contains: 14 Bushings)(Bronze)	1	
49030AA	Bushing Kit, ZF6HP26/6R60/6R80 (All) 2006-Up (14 Piece Combo)	1	
49030AB	Bushing Kit, ZF6HP26/6R60/ 6R80 2005-Up (12 Piece Combo)	1	
49030C	Bushing Kit, 6R60/6R80 2006-Up (11 Bushings)	1	
49030F	Bushing Kit, 6R80 2008-Up	1	
49034F	Bushing, 6R80 Pump 2008-Up	1	
49036C	Bushing, 6R60 Stator Tube (Front)(.907"ID)(Babbit) 2006-Up	1	
49037A	Bushing, ZF6HP19/6HP21 Stator Tube (Rear)(1.023"ID)(Bronze)	1	
S49037AK	Bushing, ZF6HP26/6R80 Stator Tube (Rear)(Fits 1.180" Input Shaft Only)(Sold In Packs Of 5 Only)(Sonnax)	1	
49037AT	Bushing, ZF6HP26/6R80/ZF6HP28 Stator Tube (Rear)(1.180"ID)(Teflon Coated)(.603"Long) 2005-Up	1	
S49037BK	Bushing, ZF6HP26 Stator Tube (Rear)(Fits 1.023" Input Shaft Only)(Sold In Packs Of 5 Only)(Sonnax)	1	
49037C	Bushing, 6R60/6R80 Stator Tube (Rear) (1.180"ID) (Babbit) 2006-Up	1	
49037CA	Bushing, 6R60/6R75 Stator Tube (Rear)(Bronze)(1.225"OD)(.653"Long)(.0588"Max Wall)	1	
49038A	Bushing, ZF6HP26 (Ford) Overdrive Clutch Drum (Rear) (Bronze With Oil Pockets) (.665"ID) 2005-Up (Also Fits ZF6HP26 (Ford) Output Shaft #062)	1-2	
49038C	Bushing, 6R60/6R80 Overdrive Clutch Drum (Rear) (Babbit With Oil Pockets) (.665"ID) 2006-Up (Also Fits 6R60/6R80 Output Shaft #062)	1-2	
49046A	Bushing, ZF6HP26 (Ford)/6R60 Direct Drum (B) (Babbit) (1.330"ID) 2005-Up	2	
49048A	Bushing, ZF6HP26 (Ford)/6R60 Forward Clutch Drum (Front) (2.350"ID) 2005-Up	1	
49048B	Bushing, ZF6HP26 (Ford)/6R60 Forward Clutch Drum (Rear) (1.970"ID) 2005-Up	1	
49049A	Bushing, ZF6HP26 (Ford)/6R60 Forward Clutch Hub (Bronze) (.965"ID) 2005-Up	2	
49062A	Bushing, ZF6HP26 (Ford) Output Shaft (Front)(.645"ID)(With Oil Pockets) (Bronze) 2005-Up (Can Use 49038A)	1	5L7Z-7B256-A
49062C	Bushing, 6R60 Output Shaft (Front)(.645"ID)(With Oil Pockets) (Babbit) 2006-Up (Can Use 49038C)	1	6L2Z-7B256-AA

PART #	METAL CLAD SEALS	QTY	REFERENCE #
49070A	Seal, ZF6HP26 (Ford)/6R60 Front Pump (2.280"OD) 2005-Up	1	6L2Z-7A248-AA

© Whatever It Takes Transmission Parts. Inc.

49072A	Seal, ZF6HP26 (Ford/6R60 Shift Lever 2005-Up	1	
49074A	Seal, ZF6HP26 (Ford)/6R60 Rear (4x4) 2.835"OD (1.532"ID) 2005-Up	1	5L7Z-7052-BA
49074CA	Seal, 6R60 Rear 2WD (2.835"OD) (1.730"ID) 2006-Up	1	
49074FB	Seal, 6R80 Rear (Extention Housing)(4x4)(All Metal) 2014-Up	1	
49084C	Seal, 6R60 2wd (Presses Into The Yoke, Under The Nut) 2006-Up	1	

PART #	FRICTION CLUTCH	QTY	REFERENCE #
49100A	Friction, ZF6HP26 (All)/6R60 Overdrive Clutch (E Clutch) (.061" Thick) (30 Teeth)(5.148"OD) (Waved) 2005-Up (ZF6HP26 Takes 6, 6R60 Takes 5)	5-6	6L2Z-7B164-CA
49100F	Friction, 6R80 Overdrive Clutch (E Clutch) (.077")(Waved) 2009-Up	6	
49104A	Use 49106A	4-5	5L7Z-7B164-B
49106A	Friction, ZF6HP26 (All)/6R60 Direct Clutch (C Clutch) .085" Thick (30 Teeth) (7 3/8"OD) 2002-Up (Also Fits ZF6HP26 (All) / 6R60 Intermediate Clutch (B Clutch) # 104 2002-Up)	4-5 8-10	6L2Z-7B164-BA
49108A	Friction, ZF6HP26 (All)/6R60 Forward Clutch (A Clutch) .063" Thick (30 Teeth) (7 3/8"OD) 2002-Up (Also Fits ZF6HP26 (All)/6R60 Low/Reverse Clutch #114 2002-Up)	4-12	6L2Z-7B164-AA
49114A	Use 49108A	1	
49119B	Friction Module, ZF6HP26 2002-Up (Also Fits 6R60 2006-Up)	1	
49119F	Friction Module, 6R80 2008-13	1	
49119FH	Friction Module, 6R80 2008-13 (W/GPZ Frictions	1	

PART #	STEEL CLUTCH	QTY	REFERENCE #
49120A	Steel, ZF6HP26 (All)/6R60/6R80 Overdrive Clutch (E Clutch)(.118" Thick) 24 Teeth (4.220"ID) 2002-Up	6	6L2Z-7B442-AA
49121A	Steel, ZF6HP26 (Ford)/6R60 Overdrive Clutch (.039" Thick) 4.220"ID (Wavy) 2005-Up	1	6L2Z-7E085-AA
49124A	Use 49128A		
49125A	Use 49129A	1	
49126A	Steel, ZF6HP26 (All)/6R60/6R80 Direct Clutch (B Clutch)(.082" Thick) 30 Teeth (6 7/16"ID) 2002-Up (Also Fits ZF6HP26 (All)/6R60 Low/Reverse Clutch #134)	4-12	6L2Z-7B442-BA
49127A	Use U49129A		
49128A	Steel, ZF6HP26 (All)/6R60/6R80 Overdrive Clutch (A Clutch)(.118")(30 Teeth)(6 7/16"ID) 2002-Up (Also Fits ZF6HP26 (All)/6R60/6R80 Intermediate Clutch)	4-12	6L2Z-7B442-CA
49129A	Steel, ZF6HP26 (Ford)/6R60 Forward Clutch (Bottom) .035" Thick (28 Teeth) Wavy (6 7/16"ID) 2005-Up (Also Fits ZF6HP26 (Ford)/6R60 Direct Clutch #127, Low/Reverse Clutch #135 & Intermediate Clutch #125)	1-3	6L2Z-7E085-BA
49134A	Use 49126A		
49135A	Use 49129A		
49137AHP	Friction/Steel Module, 6R80/ZF6HP26 (Stage 1)(Exedy Racing)	1	
49137AAHP	Friction/Steel Module, 6R80/ZF6HP26 (Stage 2)(Exedy Racing)	1	
49139F	Steel Module, 6R80 2007-10	1	

PART #	PRESSURE PLATES	QTY	REFERENCE #
49140A	Pressure Plate, ZF6HP26 (All)/6R60 Overdrive Clutch (E Clutch)(24 Teeth)(4.220"ID) 2002-Up	1	6L2Z-7B066-D
49144A	Pressure Plate, ZF6HP26 (All)/6R60 Intermediate Clutch (C Clutch)(.154" Thick) 30 Teeth (6 7/16"ID)(No Dimples) 2002-Up (Also Fits 6R60 Direct Clutch Pressure Plate #146 2006-Up)	1	6L2Z-7B066-BA
49146A	Pressure Plate, ZF6HP26 (All) Direct Clutch (B Clutch)(.154" Thick) 30 Teeth (6 7/16"ID) (30 Dimples) 2002-Up	1 1	5L7Z-7B066-A
49146C	Use 49144A	1	
49148A	Pressure Plate, ZF6HP26 (All) Forward Clutch (A Clutch)(Top) 2002-Up	1	
49148C	Use 49128A	1	
49154AA	Pressure Plate, ZF6HP26 (Ford)/6R60 Low/Reverse Clutch (.200") 30 Teeth 2005-Up	1	6L2Z-7B066-HA
49154AB	Pressure Plate, ZF6HP26 (Ford)/6R60 Low/Reverse Clutch (.208") 30 Teeth 2005-Up	1	6L2Z-7B066-M
49154AC	Pressure Plate, ZF6HP26 (Ford)/6R60 Low/Reverse Clutch (.212") 30 Teeth 2005-Up	1	6L2Z-7B066-JA
49154AD	Pressure Plate, ZF6HP26 (Ford)/6R60 Low/Reverse Clutch (.220") 30 Teeth 2005-Up	1	6L2Z-7B066-N
49154AE	Pressure Plate, ZF6HP26 (Ford)/6R60 Low/Reverse Clutch (.224") 30 Teeth 2005-Up	1	6L2Z-7B066-KA
49154AF	Pressure Plate, ZF6HP26 (Ford)/6R60 Low/Reverse Clutch (.232") 30 Teeth 2005-Up	1	6L2Z-7B066-P
49154AG	Pressure Plate, ZF6HP26 (Ford)/6R60 Low/Reverse Clutch (.236") 30 Teeth 2005-Up	1	6L2Z-7B066-LA

PART #	VALVE BODY KITS	QTY	REFERENCE #
49165A	Valve Body Kit, 6R60/6R75/6R80 2006-13 (Transgo)	1	
49165B	Shift Kit, 6R80 Gen2 (2014-On) & ZF6HP21/28/34 (Drop-in) TransGo	1	

PART #	SEALING RINGS	QTY	REFERENCE #
49175AT	Ring Kit, ZF6HP26 (Ford) (Teflon) 2005-Up	1	
49175CT	Ring KIt, 6R60 (Teflon & Metal) 2006-Up	1	

© Whatever It Takes Transmission Parts. Inc.

PART #	SEALING RINGS (Continued)	QTY	REFERENCE #
49177AT	Ring, ZF6HP26 (Ford) Input Shaft (Overdrive Drum W/Shaft) (1.065"OD) (Teflon) 2005-Up	3	5L7Z-7G091-A
49177CT	Ring, 6R60 Input Shaft (Overdrive Drum W/Shaft) (.985"OD) (Teflon) 2006-Up	2	6L2Z-7G091-DA
49177FT	Ring, 6R80 Input Shaft (Overdrive Drum W/Shaft) (1.125"OD) (Teflon) 2008-Up	3	
49180AT	Ring, ZF6HP26 (Ford)/6R60 Direct Drum Shaft (Teflon) 2005-Up	2	6L2Z-7D020-CA
49181AT	Ring, ZF6HP26 (Ford) Forward Clutch (Stator Tube Front Ring) (2.355"OD) (Teflon) 2005-Up	1	
49181BC	Ring, 6R60 Forward Clutch (Stator Tube Rear Ring) 2.200"OD (Metal) 2006-Up	1	6L2Z-7L323-AA
49181BT	Ring, ZF6HP26 (Ford) Forward Clutch (Stator Tube Rear Ring) (2.200"OD) (Teflon) 2005-Up	1	5L7Z-7D019-A
49181C	Ring, 6R60 Forward Clutch (Stator Tube Front Ring) 2.355"OD (Metal) 2006-Up	1	6L2Z-7D019-AA

PART #	WASHERS & BEARINGS	QTY	REFERENCE #
49211AA	Shim, ZF6HP26 (Ford)/6R60 Stator To Forward Sun Gear (.100" Thick) (1.930"OD) (1.600"ID) 2005-Up	1	6L2Z-7D014-AA
49211AB	Shim, ZF6HP26 (Ford)/6R60 Stator To Forward Sun Gear (.108" Thick) (1.930"OD) (1.600"ID) 2005-Up	1	6L2Z-7D014-BA
49211AC	Shim, ZF6HP26 (Ford)/6R60 Stator To Forward Sun Gear (.116" Thick) (1.930"OD) (1.600"ID) 2005-Up	1	6L2Z-7D014-CA
49211AD	Shim, ZF6HP26 (Ford)/6R60 Stator To Forward Sun Gear (.124" Thick) (1.930"OD) (1.600"ID) 2005-Up	1	6L2Z-7D014-DA
49211AE	Shim, ZF6HP26 (Ford)/6R60 Stator To Forward Sun Gear (.131" Thick) (1.930"OD) (1.600"ID) 2005-Up	1	6L2Z-7D014-F
49214A	Bearing W/Race, ZF6HP26 (Ford) Overdrive Drum To Overdrive Clutch Hub (.295" Thick) 1.505"OD (.835"ID) 2005-Up	1	
49214C	Bearing W/Races, 6R60 Overdrive Drum To Overdrive Clutch Hub (.285" Thick) 1.586"OD (.813"ID) 2006-Up	1	6L2Z-7C096-B
49217A	Bearing W/Race, ZF6HP26 (Ford) Rear Planet To Output Shaft (.158" Thick) 2.190"OD (1.580"ID) 2005-Up	1	
49217C	Bearing W/Races, 6R60 Rear Planet To Output Shaft (.197" Thick) 2.455"OD (1.626"ID) 2006-Up	1	6L2Z-7G178-AA
49218A	Race, ZF6HP26 (Ford) Rear Planet To Output Shaft (.038" Thick) 2.323"OD (1.710"ID) 2005-Up	1	5L7Z-7A166-A
49220A	Use 49248A.	1	
49221A	Use 49247A.	1	
49221C	Race, 6R60 Rear Sun Gear To Planet (.039" Thick) 1.900"OD (1.333"ID) 2006-Up	1	
49223A	Bearing W/Race, ZF6HP26 (Ford) Overdrive Clutch Hub To Forward Clutch (.163" Thick) 2.045"OD (1.383"ID) 2005-Up	1	5L7Z-7L495-A
49223C	Use 49240C	1	
49225A	Brg W/Race, ZF6HP26 (Ford) Center Support To Sun Gear (.144" Thick) 2.668"OD (1.860"ID) 2005-Up	1	5L7Z-7F405-A
49225C	Bearing W/Races, 6R60 Center Support To Sun Gear (2.925"OD) (1.994"ID) 2006-Up	1	6L2Z-7C041-BA
49226A	Race, ZF6HP26 (Ford) Center Support To Sun Gear (Cupped) 2.870"OD (2.010"ID) 2005-Up	1	5L7Z-7D066-A
49226CA	Race, 6R60 Center Support To Sun Gear (Flat) .058" Thick (2.434"OD) (2.015"ID) 2006-Up	1	6L2Z-7F405-A
49226CB	Race, 6R60 Center Support To Sun Gear (Flat) .066" Thick (2.434"OD) (2.015"ID) 2006-Up	1	6L2Z-7F405-B
49226CC	Race, 6R60 Center Support To Sun Gear (Flat) .073" Thick (2.434"OD) (2.015"ID) 2006-Up	1	6L2Z-7F405-C
49226CD	Race, 6R60 Center Support To Sun Gear (Flat) .081" Thick (2.434"OD) (2.015"ID) 2006-Up	1	6L2Z-7F405-D
49226CE	Race, 6R60 Center Support To Sun Gear (Flat) .089" Thick (2.434"OD) (2.015"ID) 2006-Up	1	6L2Z-7F405-E
49229A	Bearing W/Race, ZF6HP26 (Ford) Direct Drum To Center Support (.135" Thick) 2.625"OD (1.935"ID) 2005-Up	1	5L7Z-7F373-A
49229C	Bearing W/Races, 6R60 Direct Drum To Center Support (2.705"OD)(1.995"ID) 2006-Up	1	6L2Z-7F373-AA
49230A	Race, ZF6HP26 (Ford) Direct Drum To Center Support (2.624"OD) (2.075"ID) 2005-Up	1	
49235A	Race, ZF6HP26 (Ford) Forward Clutch Hub To Direct Drum (2.212"OD) (1.445"ID) 2005-Up	1	
49236A	Bearing W/Race, ZF6HP26 (Ford) Forward Clutch Hub To Direct Drum (2.256"OD) (1.385"ID) 2005-Up	1	5L7Z-7C096-A
49236C	Bearing W/Races, 6R60 Forward Clutch Hub To Direct Drum (.190" Thick) 2.190"OD (1.394"ID) 2006-Up	1	6L2Z-7C096-AA
49237A	Race, ZF6HP26 (Ford) Forward Planet To Overdrive Drum (.031" Thick) 1.903"OD (1.370"ID) 2005-Up	1	5L7Z-7072-A
49238A	Bearing W/Race, ZF6HP26 (Ford) Forward Planet To Overdrive Drum (.156" Thick) 2.040"OD (1.384"ID) 2005-Up	1	5L7Z-7L495-B
49238C	Bearing W/Races, 6R60 Forward Planet To Overdrive Drum (.192" Thick) 2.192"OD (1.364"ID) 2006-Up	1	6L2Z-7L495-AA
49240A	Bearing W/Races, ZF6HP26 (Ford) Forward Sun Gear To Planet (.186" Thick) 2.039"OD (1.308"ID) 2005-Up	1	
49240C	Bearing W/Races, 6R60 Forward Sun Gear To Planet (.190" Thick) 2.040"OD (1.247"ID) 2006-Up (Also Fits 6R60 Overdrive Clutch Hub To Forward Clutch Drum #223 2006-Up)	1	6L2Z-7H375-BA

FORD

© Whatever It Takes Transmission Parts. Inc.

49247A	Race, ZF6HP26 (Ford)/6R60 Rear Planet Front Sun Gear To Rear Sun Gear (.127" Thick) 1.970"OD (1.382"ID) 2005-Up (Also Fits ZF6HP26 (Ford) Rear Sun Gear To Planet #221) 2005-Up	2	6L2Z-7D235-AA
49248A	Bearing W/Race, ZF6HP26 (Ford)/6R60 Rear Planet Front Sun Gear To Rear Sun Gear (.156" Thick) 2.048"OD (1.345"ID) 2005-Up (Also Fits ZF6HP26 (Ford)/6R60 Rear Sun Gear To Planet #220) 2005-Up	2	6L2Z-7D234-BA
49263A	Caged Needle Bearing, ZF6HP26 (Ford) Output Shaft To Case (.778" Thick) 2.480"OD (Cast # RT F-2332851 INA) 2005-Up	1	5L7Z-7A415-A
49263C	Caged Needle Bearing, 6R60 Output Shaft To Case (.778" Thick) 2.480"OD (Cast # 7A415 FOMOCO) 2006-Up	1	
49270AA	Shim, ZF6HP26 (Ford) Output Shaft To Rear Aluminum Spacer (.047" Thick) 2.157"OD (1.550"ID) 2005-Up	1	5L7Z-7N357-A
49270AB	Shim, ZF6HP26 (Ford) Output Shaft To Rear Aluminum Spacer (.054" Thick) 2.157"OD (1.550"ID) 2005-Up	1	5L7Z-7N357-B
49270AC	Shim, ZF6HP26 (Ford) Output Shaft To Rear Aluminum Spacer (.063" Thick) 2.157"OD (1.550"ID) 2005-Up	1	5L7Z-7N357-D
49270AD	Shim, ZF6HP26 (Ford) Output Shaft To Rear Aluminum Spacer (.071" Thick) 2.157"OD (1.550"ID) 2005-Up	1	5L7Z-7N357-E
49270AE	Shim, ZF6HP26 (Ford) Output Shaft To Rear Aluminum Spacer (.078" Thick) 2.157"OD (1.550"ID) 2005-Up	1	5L7Z-7N357-F
49270AF	Shim, ZF6HP26 (Ford) Output Shaft To Rear Aluminum Spacer (.086" Thick) 2.157"OD (1.550"ID) 2005-Up	1	5L7Z-7N357-G
49270AG	Shim, ZF6HP26 (Ford) Output Shaft To Rear Aluminum Spacer (.094" Thick) 2.157"OD (1.550"ID) 2005-Up	1	5L7Z-7N357-H
49270AH	Shim, ZF6HP26 (Ford) Output Shaft To Rear Aluminum Spacer (.102" Thick) 2.157"OD (1.550"ID) 2005-Up	1	5L7Z-7N357-J
49270AJ	Shim, ZF6HP26 (Ford) Output Shaft To Rear Aluminum Spacer (.110" Thick) 2.157"OD (1.550"ID) 2005-Up	1	5L7Z-7N357-K
49271A	Bearing W/Races, ZF6HP26 (Ford) Output Shaft To Rear Aluminum Spacer (.200" Thick) 2.315"OD (1.570"ID) (With 3 Ears) 2005-Up	1	
49271C	Bearing W/Races, 6R60 Output Shaft To Rear Steel Spacer (.190" Thick) 2.352"OD (1.570"ID) (No Ears) 2006-Up	1	
49272A	Spacer, ZF6HP26 (Ford) Aluminum (1.042" Thick) 2.835"OD (1.560"ID) Stepped (With 2 Threaded Holes) 2005-Up	1	
49272C	Spacer, 6R60 4x4 (Steel) .665" Thick (2.835"OD) 1.760"ID (Stepped) (Cast # 6L2P-7A433-BA) 2006-Up	1	6L2Z-7A433-AA
49272CA	Ball Bearing, 6R60 2WD Case To Output Shaft 2006-Up	1	6L2Z-7A415-AA
49273CA	Race, 6R60 2WD Rear Ball Bearing To Yoke (.039" Thick) 1.733"OD (1.390"ID) 2006-Up	1	6L2Z-7B368-BA
49295A	Caged Needle Bearing, ZF6HP26/6R60 Pump Body (.575" Wide) (2.055"OD) 2005-Up	1	
49295F	Use 49034F	1	
49034F	Bushing, 6R80 Pump Body 2008-Up	1	

PART #	GASKETS & RUBBER COMPONENTS	QTY	REFERENCE #
49300AW	Gasket, ZF6HP26 (Ford) Bottom Pan (Rubber)(For Plastic Pan) 2005-Up	1	5L7Z-7A191-AA
49300B	Gasket, ZF6HP26/26A/28/32 (Ford) Bottom Pan (For Steel Pan)(Paper Gasket)	1	
49300BW	Gasket, ZF6HP26/28/32 (ZF) Bottom Pan (Rubber)(For Plastic Pan) 2002-Up	1	
49300CW	Gasket, 6R60/6R75/6R80 Bottom (Metal W/Bonded Rubber)(For Metal Pan) 2006-Up	1	
49300D	Gasket, ZF6HP26A (VW/Audi)(Metal Pan)(24 Bolts)(Paper Gasket)	1	
49305C	Gasket, 6R60 4x4 Extention Housing 2006-Up	1	
49309A	Seal/Washer, ZF6HP26 (Ford) Pump Bolt 2005-Up	14	
49311A	O-Ring, ZF6HP26 (Ford)/6R60/6R80 Pump Body 2005-Up	1	
49347A	O-Ring, ZF6HP26 (All) Case Connector 2005-Up	1	
49381A	Use 175381B	1	6L2Z-7A248-CA
175381B	O-Ring, ZF6HP26 (Ford)/6R60/6R80 Pump Cover To Case	1	
49385A	Seal, ZF6HP26 (Ford) Rubber Feed Tubes Valve Body To Center Support (Long Ones) 2005-Up	6	
49385C	Seal, 6R60 Rubber Feed Tube Valve Body To Center Support (1.569" Long With Blue End) 2006-Up	1	6L2Z-7G087-AA
49385CA	Seal, 6R60 Rubber Feed Tube Valve Body To Center Support (1.230" Long With Green End) 2006-Up	1	6L2Z-7G199-AA
49385CB	Seal, 6R60 Rubber Feed Tube Valve Body To Center Support (1.005" Long With Black Ends) 2006-Up	2	6L2Z-7G084-AA
49386A	Seal, ZF6HP26 (Ford) Rubber Feed Tubes Valve Body To Center Support (Short Ones) 2005-Up	2	

PART #	TECHNICAL MANUALS	QTY	REFERENCE #
49400A	Technical Manual, ZF6HP26 (Diagnostic)(ATSG)	1	
49401B	Manual, ZF6HP26 (BMW/Jaguar) Repair (CD)	1	

© Whatever It Takes Transmission Parts. Inc.

PART #	TECHNICAL MANUALS (Continued)	QTY	REFERENCE #
49400C	Technical Manual, 6R60/6R75/6R80 (ATSG)	1	
49401D	Manual, ZF6HP26A61 (Audi/VW) Repair (CD)	1	
49401DFD	Manual, ZF6HP26A61 (Audi/VW) Functional Description (CD)	1	

PART #	ELECTRICAL COMPONENTS	QTY	REFERENCE #
49420A	Solenoid Assembly, ZF6HP26 (7 Solenoids)(Fits Units Ending In 030/031/032/033/036/037/038/039/043/044/045/046/050/063/064/065/066/067/069/070/071/072/075/076/077/078/079/085/086/091/093/094/100/101/102/103/104/105/111/112/113/114/115/116/117/118/119/121/128/129/130/135/136/137/138/160/161/162/163/164/165/175/176/177/178/181/185/201/203/204/205/206/207/208/215)	1	
49420A-B	Solenoid Assembly, ZF6HP26X (7 Solenoids)(Use 49420A) (Units Ending In 002/003/004/011/014/018/020/027/029/030/034/035/036/038/043/044/045/046/047/051/052/053/054/055/057/058/059/064/065/066/068/069/070/071/072/074/075/086/088)	1	
49420A-D	Solenoid Assembly, ZF6HP26A (7 Solenoids) (Use 49420A) (Fits Units Ending In 008/010/014/017/020/021/025/026/027/028/036/039/052/053)(Also Fits 6HP26A61 Ending In 014/015/017/018/024/027/029/030/031/032/033/035/036/037/038/048/049/056/072/073/078)	1	
49420A-1	Solenoid, ZF6HP26 (Ford) Pressure Regulator (EDS)(Yellow Connector)	1	
49420A-2	Solenoid, ZF6HP26 (Ford) Pressure Regulator (EDS)(Blue Connector)	1	
49420A-3	Solenoid, ZF6HP26 (Ford) Pressure Regulator (EDS)(Orange Connector)	1	
49420A-4	Solenoid, ZF6HP26 (Ford)(MV)(Black Connector)	1	
49420A-5	Cylinder, ZF6HP26 (Ford) Park Lock 2006-Up	1	
49420AA	Solenoid Assembly, ZF6HP26/ZF6HP26X (9 Solenoids With Wire Harness & Park Cylinder)(Fits ZF6HP26 Units Ending In 026/027/028/029/034/051/052/053/054/05/059/060/061/062/074/082/083/084/087/092/096/097/098/106/123/124/125/126/127/134/152/166/167/168/169/171/173/183/191/192/193/194/209)(Fits ZF6HP26X Units Ending In 033/037/076/078/084)	1	
49420C	Solenoid Assembly, 6R60 (7 Solenoids) 2006-Up	1	6L2Z-7G484-AA
49420C-1	Solenoid, 6R60/6R75/6R80 (Pressure)(Neutral Connector)(White Snout)(6L2P-7G484-AC) 2006-Up	1	
49420C-2	Solenoid, 6R60/6R75/6R80 (Pressure)(Brown Connector)(Off White Snout) 2006-Up	3	
49420C-3	Solenoid, 6R60/6R75/6R80 (Pressure)(Black Connector)(Off White Snout) 2006-Up	3	
49420D	Solenoid Assembly, ZF6HP26A/6HP26A61 (7 Solenoids)(Fits ZF6HP26A Units Ending In 029/031/033/034/038/040/041/042/046/048/049/050/051/056/057/059/060/061)(Fits ZF6HP26A61 Units Ending In 039/040/041/043/044/058/059/060/061/067/068/069/070/075/080/081/082/083).	1	
49420G	Solenoid Assembly, ZF6HP28/A/X/A61 (7 Solenoids)(Fits ZF6HP28 Units Ending In 001/002/014/015/018/021)(Fits ZF6HP28A Units Ending In 001)(Fits ZF6HP28X Units Endind In 002/004/008/013/014/015/018/019/020/021)(Fits ZF6HP28A61 Units Ending In 001/002/004)	1	
49420GA	Solenoid Assembly, ZF6HP28/X (9 Solenoids With Wire Harness And Park Cylinder)(Fits ZF6HP28 Units Ending In 008/009/011/012/013/016/023/024)(Fits ZF6HP28X Units Ending In 001/003/007/009/010/011/012/016)	1	
49444A	Connector, ZF6HP26 (All)/6R60/6R75/6R80 Case (Plastic, Pass Through)(1.920"Long)(Includes 3 O-Rings) 2005-Up	1	5L7Z-7G276-AA
49444AK	O-Ring Kit, 6R60/6R75/6R80/ZF6HP19/ZF6HP21/ZF6HP28/ZF6HP32 For Plastic Pass Through (3 Pieces)(Used With 49444A)	1	
49444C	Connector, 6R60 Case (Plastic, Pass Through) (Cast # 6L2P-7H585-AA) 2006-Up	1	6L2Z-7G276-AA
49446A	Circuit Board, ZF6HP26 (Ford) Control Module 2005-Up	1	
49446C	Circuit Board, 6R60 Control Module (Cast # 6l2P14C247AC) 2006-Up	1	
49459A	Bracket, ZF6HP26 (Ford) Holds Solenoids On Valve Body 2005-Up	1	

PART #	MISCELLANEOUS COMPONENTS	QTY	REFERENCE #
49484A	Oil Sleeve, ZF6HP26 (Ford) Valve Body To Center Support (Aluminum)(Between The Rubber Seals) 2005-Up	4	
49492A	Drain Plug, ZF6HP26 (Ford) Plastic (With Allen Head) 2005-Up	1	
49493A	Fill Plug, ZF6HP26 (Ford) (Allen Head) 2005-Up	1	5L7Z-7A010-AA
49493BC	Dip Stick, 6R60 (Yellow) (4 15/16" Long) 2006-Up	1	
49493C	Dip Stick Cover, 6R60 (19mm Hex Head) 2006-Up	1	

PART #	HARD PARTS	QTY	REFERENCE #
49510A	Pump Body W/Gears, ZF6HP26 (Ford) (17 Teeth Inner Gear)(Bushing Type) 2005-Up	1	
49510C	Pump Body W/Gears, 6R60 (17 Teeth Inner Gear)(Bearing Type)(.550" Thick Gears) 2006-Up	1	
49510CA	Pump Body W/Gears, 6R60 (17 Teeth Inner Gear)(Bearing Type)(.590" Thick Gears) 2006-Up	1	
49520A	Pump Cover, ZF6HP26 (Ford) Aluminum (Cast # 1068) 2005-Up	1	
49520C	Pump Cover, 6R60 (Aluminum) (Cast # AL9SI1CU) 2006-Up	1	
49528A	Stator Housing, ZF6HP26 (Ford) Aluminum (Cast # 1068 410 041) 2005-Up	1	
49528C	Stator Housing, 6R60 (Aluminum) (Cast # 03 04 05 06) 2006-Up	1	

© Whatever It Takes Transmission Parts. Inc.

49529A	Stator Tube, ZF6HP26 (Ford) (7" Long)(38 Spline)(17 Bolt Holes)(1 Bushing)(Fits A 3 Ring Input Shaft)(With 1 Cut Out On The Edge Of Surface) 2005-Up	1	
49529C	Stator Tube, 6R60 (38 Splines)(2 Bushings)(Fits A 2 Ring Input Shaft) 2006-Up	1	
49529CA	Stator Tube, 6R60 (27 Splines)(2 Bushings)(Fits A 2 Ring Input Shaft) 2006-Up	1	
49529F	Stator Tube, 6R80 (38 Splines)(1 Bushing)(Fits A 3 Ring Input Shaft) 2008-Up	1	
49529FA	Stator Tube, 6R80 (27 Splines)(1 Bushing)(Fits A 3 Ring Input Shaft) 2008-Up	1	

PART #	PUMP COMPONENTS	QTY	REFERENCE #
49530A	Pump Gear Set, ZF6HP26 (Ford) 17 Teeth Inner Gear (.550" Thick) With 2 Lugs For Converter Hub 2005-Up	1	

PART #	HARD PARTS (Continued)	QTY	REFERENCE #
49550A	Drum W/Shaft, ZF6HP26 (Ford) Overdrive Clutch Drum (E Clutch) (With 71 Teeth Forward Planet Ring Gear & 3 Ring Shaft With 27 Splines, .875"OD, .665"OD Pilot)(6 Clutch) 2005-Up	1	5L7Z-7F207-A
49550C	Drum W/Shaft, 6R60 Overdrive Clutch Drum (E Clutch) (With 71 Teeth Forward Planet Ring Gear & 2 Ring Shaft With 32 Splines, .870"OD, .710"OD Pilot) (5 Clutch) 2006-Up	1	6L2Z-7F207-AA
49550F	Drum W/Shaft, 6R80 Overdrive Clutch Drum (E Clutch)(With 71 Teeth Forward Planet Ring Gear & 3 Ring Shaft With 32 Splines, 1.030"OD, .870"OD Pilot) (6 Clutch) 2008-Up	1	
49550FB	Drum w/Shaft, 6R80 Overdrive Clutch Drum E-Clutch (.078"OD Pilot)(6 Clutch)(71 Tooth Forward Planet Ring Gear)(3 Ring Shaft w/27 Splines 1.035"OD)	1	
49554A	Drum, ZF6HP26 (Ford)/6R60 Forward Clutch (A) 7 7/8"OD (3.227" Tall) Uses 30 Teeth Steels (Stamped Steel) 2005-Up	1	6L2Z-7A360-BA
49555A	Drum, ZF6HP26 (Ford)/6R60 Direct Clutch (B) Stamped Steel (7 5/8" Tall) Uses 30 Teeth Direct Steels 2005-Up	1	5L7Z-7F283-A
49560A	Piston Kit, ZF6HP26 (Ford) Overdrive Clutch 2005-Up (Piston Cast # 068 471 037)	1	
49560C	Piston Kit, 6R60 Overdrive Clutch (Piston Cast # RF7L1P-7G418-BA) 2006-Up	1	
49560F	Piston Kit, 6R80 Overdrive Clutch (Piston Cast #RF7L1P-7G418-BA) (With 10 Finger Return Spring) 2008-Up	1	
49562A	Piston Kit, ZF6HP26 (Ford) Intermediate Clutch (Piston Cast # 1068475016) 2005-Up	1	
49564A	Piston Kit, ZF6HP26 (Ford) Forward Clutch 2005-Up	1	
49564C	Piston Kit, 6R60 Forward Clutch (Cast # 6L20-7H360-AA On #964B) 2006-Up	1	
49565A	PistonKit, ZF6HP26 (Ford) Direct Clutch (6 Pieces) 2005-Up	1	
49565C	Piston Kit, 6R60 Direct Clutch (Piston Cast # RF6L2P-7C117-AA) 2006-Up	1	
49567A	Piston Kit, ZF6HP26 (Ford) Low/Reverse Clutch 2005-Up	1	
49570A	Hub W/Shaft, ZF6HP26 (Ford) Overdrive Clutch (10 7/8" Long) .670"OD Front Pilot 3/4" Long (30 Clutch Splines) 2005-Up	1	5L7Z-7F351-A
49570C	Hub W/Shaft, 6R60 Overdrive Clutch (10 7/8" Long) (.670"OD Front Pilot 1 1/4" Long) 1/2006-8/2006	1	6L2Z-7F351-D
49574A	Hub W/Shaft, ZF6HP26 (Ford)/6R60 Forward Clutch (11 1/8" Tall) 15 Round Holes (30 Clutch Splines) 2005-Up	1	6L2Z-7B067-A
49575A	Hub, ZF6HP26 (Ford)/6R60 Direct Clutch (2.235" Tall) 30 Clutch Splines 2005-06	1	6L2Z-7F236-AA
49580A	Planet, ZF6HP26 (Ford) Rear (Overdrive) Uses A 38 Teeth Front Sun Gear And 31 Teeth Rear Sun Gear (Cast # 1068 332 060 818 On Rear Oil Shield) 2005-Up	1	5L7Z-7D006-A
49580C	Planet, 6R60 Rear (Overdrive) (Uses A 38 Teeth Front Sun Gear & 31 Teeth Rear Sun Gear) (Cast # 6L2P-7H583-AA On Rear Oil Shield) 2006-Up	1	6L2Z-7D006-AA
49582A	Planet, ZF6HP26 (Ford) Forward (4 Gear) 16 Teeth Pinions, No Groove (Stamped Steel) 2005-Up	1	5L7Z-7A398-A
49582C	Planet, 6R60 Forward (3 Gear) 16 Teeth Pinions, No Groove (Stamped Steel) (Cast # 6L2P-7H356-AA) 2006-Up	1	6L2Z-7A398-BA
49582F	Planet, 6R80 Forward (4 Gears)(16 Teeth)(No Grooves)(Stamped Steel) (3 Ears With 9 Teeth) (1 Ear With 8 Teeth) 2008-Up	1	
49590A	Ring Gear, ZF6HP26 (Ford) Rear Planet (Overdrive) 2005-Up	1	5L7Z-7A153-A
49590C	Ring Gear, 6R60 Rear Planet (Overdrive) (Cast # 7G211 HB) 2006-Up	1	6L2Z-7A153-B
49610A	Sun Gear, ZF6HP26 (Ford) Rear Planet (Rear Sun Gear) 31 Teeth (No Groove) 1.595" Thick (2.372"OD) Splined ID (Flat On Front & Rear Of Gear) 2005-Up	1	
49610C	Sun Gear, 6R60 Rear Planet (Rear Sun Gear) (31 Teeth No Groove) 1.505" Thick (2.372"OD) Splined ID (With Raised Shoulder On Front & Back) 2006-Up	1	6L2Z-7D063-E
49612A	Sun Gear, ZF6HP26 (Ford)/6R60 Forward (37 Teeth) 1 Groove (.870" Thick) 2.570"OD (Splined Inside) 2005-Up	1	6L2Z-7D063-DA
49614A	Sun Gear, ZF6HP26 (Ford) Rear Planet (Front Sun Gear) 38 Teeth (3 Groove) .870" Thick (2.880"OD) Splined ID (Flat On Front & Rear Of Gear) 2005-Up	1	
49614C	Sun Gear, 6R60 Rear Planet (Front Sun Gear) 38 Teeth 3 Groove (.870" Thick) 2.880"OD (Splined ID) (With Raised Shoulder On Front & Rear) 2006-Up	1	6L2Z-7D063-CA
49632A	Center Support, ZF6HP26 (Ford) Aluminum (4 3/4" Thick) 8"OD (Uses 30 Teeth Intermediate Steels) (Cast # 1068) 2005-Up	1	5L7Z-7A130-A
49632C	Center Support, 6R60 (Aluminum) 4 3/4" Thick (8"OD) Uses 30 Teeth Intermediate Steels (Cast # 6L2P-7L328-CC) 2006-Up	1	6L2Z-7A130-A
49639A	Keyway Lug, ZF6HP26 (Ford)/6R60 Center Support To Case (.240" Thick) .472" Wide (1.175" Long) 2005-Up	2	5L7Z-7B220-A

© Whatever It Takes Transmission Parts. Inc.

PART #	HARD PARTS (Continued)	QTY	REFERENCE #
49654FK	Mechanical Diode, 6R80 2011-Up	1	
49678A	Shaft, ZF6HP26 (Ford) Output (4x4) 7 7/8" Long Shaft 2005-Up	1	5L7Z-7060-B
49678C	Shaft, 6R60 Output (4x4) 5 7/16" Long Shaft (20 Parking Lugs) 2006-Up	1	6L2Z-7060-B
49698A	Oil Sleeve, ZF6HP26 (Ford) Valve Body To Pump (Plastic, Dual Squares) 2005-Up	1	
49698C	Oil Sleeve, 6R60 Valve Body To Pump (Plastic, Dual Squares)(Cast # 6L2P-7F401-CA) 2006-Up	1	6L2Z-7F401-A
49699C	Oil Baffle, 6R60 Forward Planet (Rear) Plastic, 6 Tabs (Cast # 6L2P7H578A) 2006-Up	1	6L2Z-7L339-A
49740A	Valve Body, ZF6HP26 (Ford) (Navigator) (With 7 Solenoids) 2005-Up	1	
49740BAK	Valve Body, ZF6HP26 (Caontains Illustration #'s 420, 444,446, 698, 740 & 765) (Fits 1068 010 Units Ending In: 004/006/014/024/026/027/028/029/034/035/057/059/060/061/062)	1	
49740BBK	Valve Body, ZF6HP26 (Contains Illustration #'s 420, 444, 446, 698, 740 & 765) (Fits 1068 010 Units Ending In: 067/069/078/093/094/09 /111/112/160)	1	
49740BCK	Valve Body, ZF6HP26 (Contains Illustration #'s 420, 444, 446, 698, 740 & 765) (Fits 1068 010 Units Ending In: 051/052/053/054/083)(Also Fits ZF6HP26 Units 1070 010 Ending In 007 & 008)	1	
49740BDK	Valve Body, ZF6HP26X (Contains Illustration #'s 420, 444, 446, 698, 740 & 765) (Fits 1068 020 Units Ending In 043/044/065)	1	
49740BEK	Valve Body, ZF6HP26X (Contains Illustration #'s 420, 444, 446, 698, 740 & 765)(Fits 1068 020 Units Ending In 052/069/070)(Special Order Only)	1	
49740BFK	Valve Body, ZF6HP26X (Contains Illustration #'s 420, 444, 446, 698, 740 & 765) (Fits 1068 020 Units Ending In 051/054/064/066)(Special Order Only)	1	
49740BGK	Valve Body, ZF6HP26 (Contains Illustration #'s 420, 444, 446, 698, 740 & 765) (Fits 1068 010 Units Ending In 100/101/102)	1	
49740BHK	Valve Body, ZF6HP26 (Contains Illustration #'s 420, 444, 446, 698, 740 & 765) (Fits 1068 010 Units Ending In 043/044/045)	1	
49740BJK	Valve Body, ZF6HP26X (Contains Illustration #'s 010, 300, 420, 446, 698 & 740) (Fits 1068 020 Units Ending In 011/014/018/072)	1	
49740BKK	Valve Body, ZF6HP26 (Contains Illustration #'s 420, 444, 446, 698, 740 & 765) (Fits 1068 010 Units Ending In 010/011/084/092/096/097/09 /106)	1	
49740BLK	Valve Body, ZF6HP (Contains Illustration #'s 420, 444, 446, 698, 740 & 765) (Fits 1068 010 Units Ending In 123/124/125/126/127/152/16 /167/168/169/171/183 (Also Fits 1070 010 Units Ending In 014 & 017)	1	
49740BMK	Valve Body, ZF6HP26 (Contains Illustration #'s 420, 444, 446, 698, 740 & 765) (Fits 1068 010 Units Ending In 113/114/115)	1	
49740BNK	Valve Body, ZF6HP26 (Contains Illustration #'s 420, 444, 446, 698, 740 & 765) (Fits 1068 010 Units Ending In 151/154)	1	
49740BPK	Valve Body, ZF6HP26 (Contains Illustration #'s 420, 444, 446, 698, 740 & 765) (Fits 1068 010 Units Ending In 162/163/164)	1	
49740BQK	Valve Body, ZF6HP26 (Contains Illustration #'s 420, 444, 446, 698, 740 & 765)(Fits 1068 010 Units Ending In 036/037/063/064/065/070)	1	
49740BRK	Valve Body, ZF6HP28 (Contains Illustration #'s 420, 444, 446, 698, 740 & 765)(Fits 1068 040 Units Ending In 009)(Also Fits 1068 050 Units Ending In 009/028/036/045)	1	
49740BSK	Valve Body, ZF6HP28 (Contains Illustration #'s 420, 444, 446, 698, 740 & 765)(Fits 1068 010 Units Ending In: 075/076/077/079)	1	
49740BTK	Valve Body, ZF6HP28 (Contains Illustration #'s 420, 444, 446, 698, 740 & 765)(Fits 1068 040 Units Ending In: 009)(Fits 1068 050 Units Ending In: 028/036/045)	1	
49740BXK	Valve Body, ZF6HP28 (Contains Illustration #'s 420, 444, 446, 698, 740 & 765)(Fits 1068 050 Units Ending In 009)	1	
49740BZK	Valve Body, ZF6HP28 (Contains Illustration #'s 420, 444, 446, 698, 740 & 765)(Fits 1068 040 Units Ending In 024/032/047/057)(Also Fits 1068 050 Units Ending In 034/048)	1	
49740C	Valve Body, 6R60 (With 7 Solenoids) (Cast # RF6L2P-7A101-DA On Filter Side) (Cast # RF6L2P-7A092-DA On Case Side) 2006-Up (Seperator Plate Cast # 6L2P-7Z490-FB)	1	
49740F	Valve Body, 6R80 2009-Up (Includes Circuit Board And Both Speed Sensors)	1	
49740FA	Valve Body, 6R80 2011-14 (Includes Circuit Board)	1	
49740FD	Valve Body, 6R80 (Ford Transit 2015-17)(Mustang 2011-17) Includes Circuit Board & Both Speed Sensors)	1	

PART #	VALVE BODY PARTS	QTY	REFERENCE #
S49741ABK	Valve Kit, ZF6HP26/6R60 Bypass Clutch Control (Oversized) 2002-Up (Sonnax)(Must Use Tool T-F-95740-TL13 & T-VB-FIX)	1	
T-F-95740-TL13	Tool For S49741ABK	1	
49741AC-6K	End Plug Kit, 6R60/6R75/6R80/ZF6HP26 Valve Body (Contains: 6 Large End Plugs With O-Rings & Washer, 1 Small End Plug With O-Ring & Washer, And 1 Pressure Regulator Support Sleeve) (Superior)	1	
S49741ACK	Valve Kit, ZF6HP26/6R60 Converter Release Regulator (Oversized) 2002-Up (Must Use Tool T-F-95740-TL5 & T-VB-Fix)	1	
T-F-95740-TL5	Tool For S49741ACK	1	
S49741AD-6K	End Plug Kit, ZF6HP26/6R60 2002-Up (Sonnax)(Contains: 4 Internal Plugs With O-Rings)	1	

© Whatever It Takes Transmission Parts. Inc.

S49741AFK ....Valve Kit, ZF6HP26/6R60 Lube Control (Oversized) 2002-Up (Sonnax)(Must Use T-F-95740-TL11 & T-VB-Fix)....1
T-F-95740-TL11 Tool For S49741AFK....1
S49741AGK....Valve Kit, ZF6HP26/6R60 Clutch A control (Oversized) 2002-Up (Sonnax)(Must Use T-F-95740-TL8 & T-VB-Fix)....1
T-F-95740-TL8 ..Tool For S49741AGK....1
S49741AJK.....Valve Kit, ZF6HP26/6R60 Clutch D1 Or E Control (Oversized) 2002-Up (Sonnax)(Must Use Toll T-F-95740-TL8 & T-VB-Fix)....1
S49741ALK ....Valve Kit, ZF6HP26/6R60 Solenoid Pressure Regulator (Oversized) 2002-Up (Sonnax)(Must Use Tool T-F-95740-TL17 & T-VB-FIX)....1
T-F-95740-TL17 Tool For S49741ALK....1
S49741AP-2 ...Sleeve, ZF6HP26/6R60 Pressure Regulator 2002-Up (Sonnax)....1
S49741APK....Valve Kit, ZF6HP26/6R60 Pressure regulator (Oversized) 2002-Up (Sonnax)(Must Use Tool T-F-95740TL & T-VB-Fix)....1
T-F-95740-TL..Tool For S49741APK....1
S49741ATK ....Valve & Sleeve Kit, ZF6HP26/6R60 Clutch A Control Boost 2002-Up (Sonnax)....1
S49741B-1.....Valve Bypass, 6R60/6R75/6R80 Thermal Control....1
S49741GK.....Zip Kit, ZF6HP21/28/34 (Generation 2)(Sonnax)(Contains: Pressure Regulator Sleeve, Clutch A & E control Boost Valve & Sleeve Kit, Valve Body Accumulator Piston & Spring Kit, O-Ringed End Plug Kit, Solenoid O-Rings)....1
49741L.....Valve Kit, 6R60/6R70/6R80 Solenoid & Lube Regulator (Without Tool) (Transgo)....1
49741LK .....Valve Kit, 6R60/6R70/6R80 Solenoid & Lube Regulator (With Tool) (Transgo)....1
49741MA .....Manual Valve, ZF6HP26 (Ford) 5 3/8" Long (.590"OD) 2005-Up (With 5 Spools)....1
S49741PK .....Valve Kit, ZF6HP28 Solenoid Pressure Regulator (Oversized)(Contains: O-Ringed End Plug, 2 O-Rings, Spring & Valve)(Must Use T-F-95740-TL17 & T-VB-Fix)....1
S49741SK .....Zip Kit, ZF6H19/26/32, (Ford) 6R60/6R80 (Sonnax)(Contains S49741AP-2, S49741TK, S49741AD-6K, S49741AC-6K, S49940AK, Replacement O-Rings & Testing Parts)....1
S49741SKA....Zip Kit, ZF6HP19/26/32 (Gen 1)(With 053 Seperator Plate Only)....1

PART #	HARD PARTS (Continued)	QTY	REFERENCE #
49747A	Plate, ZF6HP26 Valve Body (Bonded) 2002-Up (Cast # 1068 327 141 With A035 & B035 Stamped On Plate)	1	
49747AA	Plate, ZF6HP26 Valve Body (Bonded) 2002-Up (Cast # 1068 327 163 With A047 & B047 Stamped On Plate)	1	
49747AB	Plate, ZF6HP26 Valve Body (Bonded) 2002-Up (Cast # 1068 327 179 With A051 & B051 Stamped On Plate)(Also Cast # 1068 327 145 With A036 & B036 Stamped On Plate)	1	
49747AC	Plate, ZF6HP26 Valve Body (Bonded) 2002-Up (Cast # 1068 327 180 With A052 & B052 Stamped On Plate) This Plate Will Replace The Plate Stamped With A046 & B046)	1	
49747AD	Plate, ZF6HP26 Valve Body (Bonded) 2002-Up (Cast # 1068 327 189 With A053 & B053 Stamped On Plate)	1	
49747AE	Plate, ZF6HP26 Valve Body (Bonded) 2002-Up (Cast # 1068 327 210 With A063 & B063 Stamped On Plate)	1	
49747AF	Plate, ZF6HP26 Valve Body (Bonded) 2002-Up (Cast # 1068 327 224 With A065 & B065 Stamped On Plate)	1	
49747AH	Plate, ZF6HP26 Valve Body (Bonded) 2002-Up (Cast # N/A With A046 & B046 Stamped On Plate)	1	
49747CA	Plate, 6R60 Valve Body (Bonded) 2006-Up (Cast # 6L2P-7Z490-FB)	1	
49760A	Case, ZF6HP26 (Ford) (Navigator) (5.4L Engine) 2005-Up	1	5L7Z-7005-A
49760C	Case, 6R60 (4.6L) 4x4 2006-Up	1	
49760CC	Case, 6R60 (4.6L) 2WD 2006-Up	1	
49761A-P	Thermal By-Pass Valve, ZF6HP26 (Ford) (Sets In Case) (Valve & Spring) 2005-Up	1	
49761C-P	Thermal By-Pass Valve, 6R60 (Sets In Case) (Valve, Spring & Sleeve) 2006-Up	1	
49765A	Pan, ZF6HP26 (Ford) Bottom (Plastic) With Filter Made Into The Pan (2005-06 Navigator)	1	5L7Z-7A194-AA
49765B	Pan, ZF6HP26 (BMW/Jaguar/Land Rover) Bottom (With Pan Gasket)(Plastic)(With Filter Made Into The Pan) 2002-Up	1	
49765BAK	Pan Kit, ZF6HP26 Metal 2007-Up (6R60 2006-Up)(Contains: Metal Pan, Filter, Pan Gasket & Pan Bolts)	1	
49765C	Pan, 6R60 Bottom (Metal) (21 Bolt) 2006-Up	1	
49770A	Extension Housing, ZF6HP26 (Ford) 4x4 (Cast Iron) 5 3/16" Long (With 2 Threaded Bosses) 2005-Up	1	
49770C	Extension Housing, 6R60 4x4 (Cast Iron) 2006-Up	1	
49777AK	Bolt Set, ZF6HP26 (Ford)/6R60 Pump To Case (14 Pieces) 2005-Up	1	
49778AK	Bolt Set, ZF6HP26 (Ford)/6R60 (10 Pieces Hold Stator Shaft To Stator Housing) (11 Pieces Hold Pump Body To Stator) (21 Pieces Total) 2005-Up	1	
49779A	Bolt, ZF6HP26 Pan To Case (For Plastic Pan) 2002-Up (Takes 21 Per Pan)	21	
49779AK	Bolt Set, ZF6HP26 (Ford) Pan To Case (21 Pieces) (For Plastic Pan) 2005-Up	1	
49779CK	Bolt Set, 6R60 Pan To Case (21 Pieces) (For Metal Pan) 2006-Up	1	
49781AK	Bolt Set, ZF6HP26 (Ford) Extension Housing To Case (11 Pieces) 2005-Up	1	
49781CK	Bolt Set, 6R60 Extension Housing To Case (9 Pieces) 2006-Up	1	

© Whatever It Takes Transmission Parts. Inc.

PART #	HARD PARTS (Continued)	QTY	REFERENCE #
49782AK	Bolt Set, ZF6HP26 (Ford) / 6R60 Valve Body To Case (8 Pieces) 2005-Up	1	
49798C	Nut, 6R60 Holds 2WD Yoke To Output Shaft (12 Point) 2006-Up	1	
49841C	Yoke, 6R60 2WD (4 Bolt) 2006-Up	1	
49861AA	Snap Ring, ZF6HP26 (Ford)/6R60 Holds Overdrive Clutch Pressure Plate In (.071” Thick) (5.470”OD) 2005-Up	1	5L7Z-7D483-Q
49861AB	Snap Ring, ZF6HP26 (Ford)/6R60 Holds Overdrive Clutch Pressure Plate In (.078” Thick) (5.470”OD) 2005-Up	1	5L7Z-7D483-R
49861AC	Snap Ring, ZF6HP26 (Ford)/6R60 Holds Overdrive Clutch Pressure Plate In (.086” Thick) (5.470”OD) 2005-Up	1	5L7Z-7D483-S
49861AD	Snap Ring, ZF6HP26 (Ford)/6R60 Holds Overdrive Clutch Pressure Plate In (.094” Thick) (5.470”OD) 2005-Up	1	5L7Z-7D483-T
49861AE	Snap Ring, ZF6HP26 (Ford)/6R60 Holds Overdrive Clutch Pressure Plate In (.102” Thick) (5.470”OD) 2005-Up	1	5L7Z-7D483-U
49861AF	Snap Ring, ZF6HP26 (Ford)/6R60 Holds Overdrive Clutch Pressure Plate In (.110” Thick) (5.470”OD) 2005-Up	1	5L7Z-7D483-V
49861AG	Snap Ring, ZF6HP26 (Ford)/6R60 Holds Overdrive Clutch Pressure Plate In (.118” Thick) (5.470”OD) 2005-Up	1	5L7Z-7D483-W
49861AH	Snap Ring, ZF6HP26 (Ford)/6R60 Holds Overdrive Clutch Pressure Plate In (.126” Thick) (5.470”OD) 2005-Up	1	5L7Z-7D483-X
49861AJ	Snap Ring, ZF6HP26 (Ford)/6R60 Holds Overdrive Clutch Pressure Plate In (.134” Thick) (5.470”OD) 2005-Up	1	5L7Z-7D483-Y
49861AK	Snap Ring, ZF6HP26 (Ford)/6R60 Holds Overdrive Clutch Pressure Plate In (.142” Thick) (5.470”OD) 2005-Up	1	5L7Z-7D483-Z
49862A	Snap Ring, ZF6HP26 (Ford)/6R60 Holds Overdrive Clutch Piston Retainer In Drum (.095” Thick) (1.618”OD) 2005-Up	1	6L2Z-7C122-C
49862A-1	Retainer/Spacer, ZF6HP26 (Ford) Set On Top Of Snap Ring #862 (1.702”OD)(1.390”ID) 2005-Up	1	5L7Z-7A527-B
49873AA	Use 49878	1	
49874A	Snap Ring, ZF6HP26 (Ford)/6R60 Holds Intermediate Clutch Piston Retainer In Center Support (.076” Thick) (3.675”OD) 2005-Up	1	6L2Z-7A577-AA
49875A	Snap Ring, ZF6HP26 (Ford) Holds Direct Clutch Hub To Forward Clutch Drum (.100” Thick) 7 5/8”OD (With Hooked Ends) 2005-Up	1	5L7Z-7C122-B
49875C	Snap Ring, 6R60 Holds Direct Clutch Hub To Forward Clutch Drum (.100” Thick) 7 5/8”OD (With Square Ends) 2006	1	6L2X-7C122-BA
49876AA	Use 49878	1	6L2Z-7D483-BA
49877A	Snap Ring, ZF6HP26 (Ford)/6R60 Holds Forward Clutch Return Spring In (.055” Thick) 2.770”ID (4 Ears, 2 Eyelets) 2005-Up	1	6L2Z-7H365-AA
49878AA	Snap Ring, ZF6HP26 (Ford)/6R60 Holds Direct Clutch Pressure Plate In (.114” Thick) (7 3/4”OD) 2005-Up (Also Fits #873 & #876)	1	6L2Z-7D483-BA
49878AB	Snap Ring, ZF6HP26 (Ford)/6R60 Holds Direct Clutch Pressure Plate In (.122” Thick) (7 3/4”OD) 2005-Up (Also Fits #873 & #876)	1	6L2Z-7D483-CA
49878AC	Snap Ring, ZF6HP26 (Ford)/6R60 Holds Direct Clutch Pressure Plate In (.130” Thick) (7 3/4”OD) 2005-Up (Also Fits #873 & #876)	1	6L2Z-7D483-DA
49878AD	Snap Ring, ZF6HP26 (Ford)/6R60 Holds Direct Clutch Pressure Plate In (.138” Thick) (7 3/4”OD) 2005-Up (Also Fits #873 & #876)	1	6L2Z-7D483-EA
49878AE	Snap Ring, ZF6HP26 (Ford)/6R60 Holds Direct Clutch Pressure Plate In (.145” Thick) (7 3/4”OD) 2005-Up (Also Fits #873 & #876)	1	6L2Z-7D483-FA
49878AF	Snap Ring, ZF6HP26 (Ford)/6R60 Holds Direct Clutch Pressure Plate In (.153” Thick) (7 3/4”OD) 2005-Up (Also Fits #873 & #876)	1	6L2Z-7D483-GA
49878AG	Snap Ring, ZF6HP26 (Ford)/6R60 Holds Direct Clutch Pressure Plate In (.161” Thick) (7 3/4”OD) 2005-Up (Also Fits #873 & #876)	1	6L2Z-7D483-HA
49879A	Snap Ring, ZF6HP26 (Ford)/6R60 Holds Direct Clutch Piston Retainer In (.055” Thick) (2.545”OD) 2005-Up	1	6L2Z-7H363-AA
49879B	Snap Ring, ZF6HP26 (Ford)/6R60 Holds Direct Clutch Inner Piston In (.098” Thick) (2.140”OD) 2005-Up	1	5L7Z-7A577-A
49882A	Snap Ring, ZF6HP26 (Ford)/6R60 Holds Forward Planet To Forward Clutch Drum (.038” Thick) 2.875”OD (With 3 Bends) 2005-Up	1	6L2Z-7D483-J
49883A	Snap Ring, ZF6HP26 (Ford)/6R60 Holds Center Support To Case (.172” Thick) 8 3/8”OD (Beveled) 2005-Up	1	6L2Z-7D483-K
49885A	Horse Shoe Clips, ZF6HP26 (Ford) Holds Low/Reverse Clutch Piston (.132” Thick) (2 Per Pack) 2005-Up	1	5L7Z-7C122-A
49885C	Snap Ring, 6R60 Holds Low/Reverse Clutch Piston (.078” Thick) (2.670”OD) 2006-Up	1	6L2Z-7D483-L
49889A	Snap Ring, ZF6HP26 (Ford)/6R60 Holds Output Shaft To Rear Ring Gear (.076” Thick) (7 1/8”OD) 2005-Up	1	6L2Z-7C122-AA
49895A	Snap Ring, ZF6HP26 (Ford)/6R60 Holds #272 In Case (.099” Thick) (3.050”OD) 2005-Up	1	6L2Z-7030-BA
49898A	Snap Ring, ZF6HP26 (Ford) Holds Bearing In Pump Body (.058” Thick) (2.140”OD) 2005-Up	1	
49898C	Snap Ring, 6R60 Holds Bearing In Pump Body (.059” Thick) (2.105”OD) 2006-Up	1	

FORD

© Whatever It Takes Transmission Parts. Inc.

49940A	Piston, ZF6HP26 (6R60) Valve Body Accumulator 2002-Up	1	
S49940AK	Piston & Spring Kit, ZF6HP26/6R60 Valve Body Accumulator 2002-Up (Sonnax)(6 Sets)	1	
49960A	Piston, ZF6HP26 (Ford) Overdrive Clutch (Aluminum) (1.345" Thick) (5.100"OD)(1.485"ID) (Cast # 1 068 471 037) 2005-Up	1	5L7Z-7A262-E
49960B	Piston/Retainer, ZF6HP26 (Ford) Overdrive Clutch Inner (Steel) (4.812"OD) (1.385"ID) (Smooth Where Snap Ring #862 Sets) 2005-Up	1	5L7Z-7H360-B
49960BC	Piston/Retainer, 6R60/6R80 Overdrive Clutch Inner (Steel) (4.812"OD) (1.385"ID) (With 4 Humps Where Snap Ring #862 Sets) 2006-Up	1	6L2Z-7H360-BA
49960C	Piston, 6R60/6R80 Overdrive Clutch (Aluminum) (1.330" Thick) (5.100"OD) (1.485"ID) (Cast # RF7L1P-7G418-BA) 2006-Up	1	6L2Z-7A262-A
49962A	Piston, ZF6HP26 (Ford) Intermediate Clutch (Aluminum) .686" Thick (7 3/8"OD)(5.645"ID) (Cast # 1068475016) 2005-Up	1	5L7Z-7E005-A
49962C	Piston, 6R60 Intermediate Clutch (Aluminum) .910" Thick (7 5/16"OD) (5.634"ID) (Cast # RF6L2P-7J015-BA) 2006-Up	1	6L2Z-7E005-BA
49964A	Piston, ZF6HP26 (Ford) Forward Clutch (Aluminum) (7 5/16"OD) (3.040"ID) (Cast # 1068 470 044) 2005-Up	1	5L7Z-7A262-D
49964B	Housing, ZF6HP26 (Ford) Forward Clutch Piston (7 1/16"OD) (1.355" Tall)(Splined ID) (Used With 4 Gear Planet #582) 2005-Up	1	5L7Z-7H360-C
49964BC	Housing, 6R60 Forward Clutch Piston (7 1/16"OD) 1.355" Tall (Splined ID) (Cast # 6L2P-7H360-AA) (Used With 3 Gear Planet #582) 2006-Up	1	6L2Z-7H360-AA
49964C	Piston, 6R60 Forward Clutch (Aluminum) 7 5/16"OD (3.040"ID) (Cast # RF6L2P-7L140-AA) 2006-Up	1	6L2Z-7A262-EA
49965A	Piston, ZF6HP26 (Ford) Direct Clutch (Outer) Aluminum & Steel (8 Square Holes) 2 3/4" Thick (7 3/16"OD) (1.995"ID) 2005-Up (Cast # 1068 472 041)	1	5L7Z-7A262-C
49965B	Inner Piston, ZF6HP26 (Ford) Direct Clutch (Aluminum) 10 Lugs In The Center (4.635"OD) (1.940"ID) (Cast # 1068 472 035) 2005-Up	1	5L7Z-7H360-A
49965BC	Inner Piston, 6R60 Direct Clutch (Aluminum) 10 Lugs In The Center (4.635"OD) 1.940"ID (Cast # RF6l2P-7H359-AA) 2006-Up	1	6L2Z-7H359-AA
49965C	Piston, 6R60 Direct Clutch (Outer) Aluminum & Steel (8 Square Holes) 2 3/4" Thick (7 3/16"OD) 1.995"ID (Cast # RF6L29-7C117-AA) 2006-Up	1	6L2Z-7A262-DA
49967A	Piston, ZF6HP26 (Ford) Low/Reverse Clutch (Steel) .970" Thick (7 3/16"OD) (2.450"ID) 2005-Up	1	5L7Z-7A262-B
49967B	Inner Piston, ZF6HP26 (Ford) Low/Reverse Clutch (Aluminum) 1.055" Thick (3.848"OD) (2.390"ID) 2005-Up	1	5L7Z-7A262-A
49967C	Piston, 6R60 Low/Reverse Clutch (Aluminum) .856" Thick (7 3/16"OD) 2.465"ID (Cast # RF6L2P-7D343-CA) 2006-Up	1	6L2Z-7A262-CA
49970A	Spring, ZF6HP26 (Ford)/6R60 Overdrive Clutch Piston Return (.079" Thick) (4.480"OD) (19 Fingers) 2005-Up	1	6L2Z-7B070-AA
49970F	Spring, 6R80 Overdrive Clutch Piston Return (.079" Thick)(4.475"OD)(10 Fingers) 2008-Up	1	
49972A	Spring, ZF6HP26 (Ford) / 6R60 Intermediate Clutch Return (.080" Thick) 7"OD (12 Fingers) 2005-Up	1	5L7Z-7B070-E
49974A	Spring, ZF6HP26 (Ford)/6R60 Forward Clutch Return (10 Fingers) .082" Thick (5.625"OD) 2005-Up	1	6L2Z-7A480-AA
49975A	Spring, ZF6HP26 (Ford)/6R60 Direct Clutch Piston Return (.098" Thick) (2.140"OD) 2005-Up	1	6L2Z-7B488-AA
49977A	Spring, ZF6HP26 (Ford) Low/Reverse Clutch Piston Return (.062" Thick) 5.700"OD (12 Fingers) 2005-Up	1	5L7Z-7B070-B
49977C	Spring, 6R60 Low/Reverse Clutch Piston Return (.078" Thick) 5.630"OD (12 Fingers) 2006-Up	1	6L2Z-7B070-BA
49982A	Retainer, ZF6HP26 (Ford)/6R60 Intermediate Clutch Piston (Steel) .700" Thick (5.463"OD) (3.550"ID) 2005-Up	1	6L2Z-7B043-AA
49985A	Spacer, ZF6HP26 (Ford)/6R60 Under Snap Ring #879 (.083" Thick Stepped To .052" Thick) (2.350"OD) (1.982"ID) 2005-Up	1	6L2Z-7A527-AA
49991A	Linkage Assembly, ZF6HP26 (Ford) / 6R60 Internal 2005-Up	1	
49992A	Manual Shaft, ZF6HP26 (Ford) With External Lever 2005-Up (External Lever Is Welded Onto The Shaft)	1	5L7Z-7A256-A
49992C	Manual Shaft, 6R60 With External Lever 2006-Up (External Lever Bolts Onto The Shaft)	1	6L2Z-7C493-AA
49995A	Park Pawl Assembly, ZF6HP26 (Ford) (4 Pieces) 2005-Up	1	
49995C	Park Pawl Assembly, 6R60 (4 Pieces) (Cast # 6L2P-7A441-BA) 2006-Up	1	
49999A	Oil Tube Set, ZF6HP26 (Ford) (4 Pieces) 2005-Up	1	

© Whatever It Takes Transmission Parts. Inc.

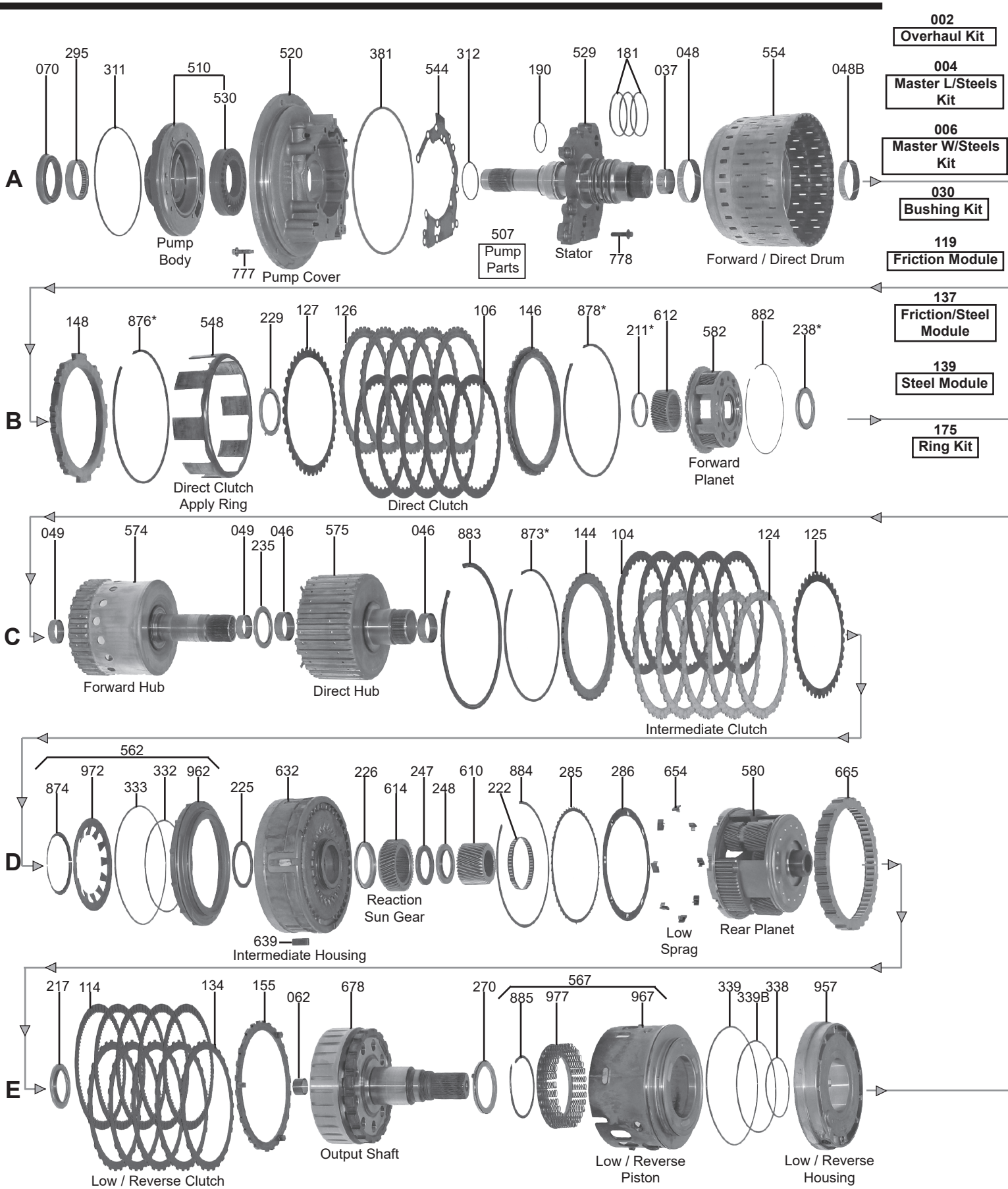

FORD

© Whatever It Takes Transmission Parts. Inc.

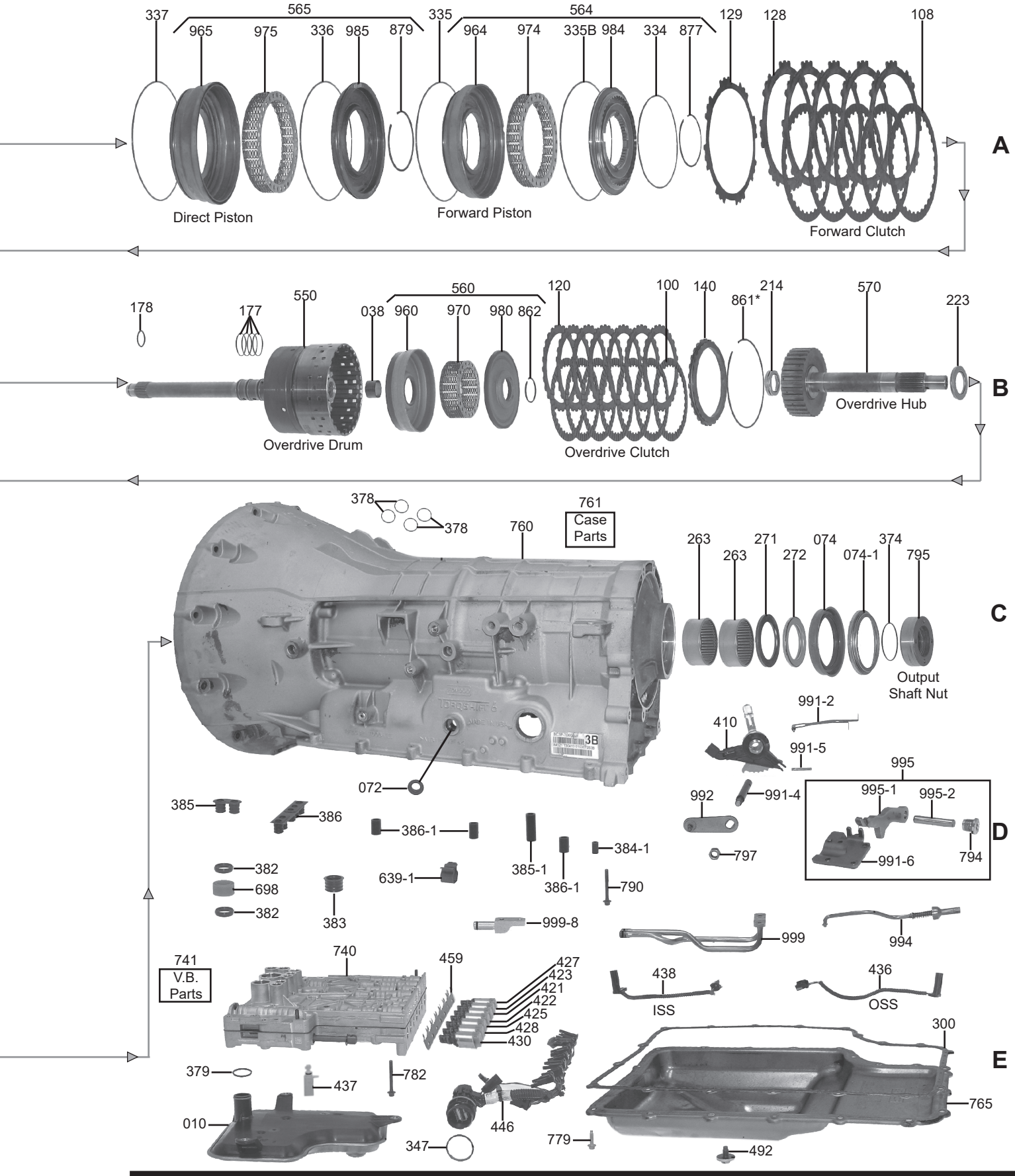

© Whatever It Takes Transmission Parts. Inc.

FORD

PART #	OVERHAUL KITS	QTY	REFERENCE #
236002A	Overhaul Kit, 6R140 2011-Up	1	
236002AW	Overhaul Kit, 6R140 2011-Up (For Bonded Pistons Sell A236960AK)	1	

PART #	MASTER L/STEELS KIT	QTY	REFERENCE #
236004A	Master L/Steels Kit, 6R140 2011-Up	1	
236004AW	Master L/Steels Kit, 6R140 (Gas Engine) 2011-Up (For Bonded Pistons Sell A236960AK)	1	
236004AAW	Master L/Steels Kit, 6R140 (Diesel Engine) 2011-Up (For Bonded Pistons Sell A236960AK)	1	

PART #	MASTER W/STEELS KIT	QTY	REFERENCE #
236006A	Master W/Steels Kit, 6R140 2011-Up	1	
236006AW	Master W/Steels Kit, 6R140 (Gas Engine) 2011-Up (For Bonded Pistons Sell A236960AK)	1	
236006AAW	Master W/Steels Kit, 6R140 (Diesel Engine) 2011-Up (For Bonded Pistons Sell A236960AK)	1	

PART #	FILTERS	QTY	REFERENCE #
236010A	Filter, 6R140 4X4 (3 Bolt)(Cast # BC3P-7G185-BE) 2011-Up	1	

PART #	BUSHINGS	QTY	REFERENCE #
236030A	Bushing Kit, 6R140 2011-Up (9 Bushings)	1	
236037A	Bushing, 6R140 Stator (Rear) (.790”Thick)(1.588”ID)(Babbit) 2011-Up	1	
236038A	Bushing, 6R140 Overdrive Clutch Drum (Rear)(.786”Wide)(.920”ID) 2011-Up	1	
236046A	Bushing, 6R140 Direct Clutch Hub (Front & Rear)(.605”Wide)(1.857”ID)(Babbit) 2011-Up	2	
236048A	Bushing, 6R140 Forward/Direct Drum (Front)(.550”Thick)(3.100”ID)(Babbit) 2011-Up	1	
236048B	Bushing, 6R140 Forward/Direct Drum (Rear)(.650”Thick)(2.640”ID)(Babbit) 2011-Up	1	
236049A	Bushing, 6R140 Forward Clutch Hub (Front & Rear)(.613”Wide)(1.336”ID)(Babbit) 2011-Up	2	
236062A	Bushing, 6R140 Output Shaft (Front)(.800”Wide)(.918”ID)(Babbit) 2011-Up	1	

PART #	METAL CLAD SEALS	QTY	REFERENCE #
236070A	Seal, 6R140 Front Pump Body (.470”Thick)(3.265”OD)(2.505”ID) 2011-Up	1	
236074-1A	Dust Shield, 6R140 4X4 Rear Seal (Cast # BC3P-7085 F956) 2011-Up	1	
236074A	Seal, 6R140 4X4 Rear (.632”Thick)(4.126”OD)(3.108”ID) 2011-Up	1	
236074AA	Seal, 6R140 Rear (W/Bolt On Yolk) 2011-Up	1	

PART #	FRICTION CLUTCH	QTY	REFERENCE #
236100A	Friction, 6R140 Overdrive Clutch (.080”)(32 Teeth)(5.733”OD) 2011-Up	7	
236100AH	Friction, 6R140 Overdrive Clutch (.080”)(32 Teeth)(5.733”OD) 2011-Up (GPZ)	7	
236100BH	Friction, 6R140 Overdrive Clutch (.064”)(32 Teeth)(5.733”OD) 2011-Up (GPZ)	7	
236104A	Friction, 6R140 Intermediate Clutch (.086”)(32 Teeth)(8 1/2”OD)(72 Slots) 2011-13	5	
236104B	Friiction, 6R140 Intermediate Clutch (C)(.064”)(32 Teeth)(8.53”OD)(6.97”ID)(Tan)(Waved) 2014-On	5	
236106A	Friction, 6R140 Direct Clutch (.087”)(32 Teeth)(8 1/2”OD)(48 Slots) 2011-13	5	
236106B	Friction, 6R140 Direct (B) Clutch (Gas & Diesel)(.064”Thick)(32 Teeth)(Hi Energy)(8.53”OD) 2014-Up (Also Fits 6R140 Intermediate (C) Clutch (Gas Only) 2014-Up	5	
236106AAH	Friction, 6R140 Direct Clutch (.066”)(32 Teeth)(8 1/2”OD) 2011-Up	5	
236108A	Friction, 6R140 Forward Clutch (.063”) (32 Teeth)(8 1/8”OD) 2011-Up	5	
236114A	Friction, 6R140 Low/Reverse Clutch (.067”) (96 Teeth)(8 3/4”OD) 2011-Up	5	
236119A	Friction Module, 6R140 (Gas Engine) 2011-13	1	
236119AA	Friction Module, 6R140 (Diesel Engine) 2011-13	1	
236119B	Friction Module, 6R140 (OE Gas)(Heavy Duty Diesel) 2014-On	1	

PART #	STEEL CLUTCH	QTY	REFERENCE #
236120A	Steel, 6R140 Overdrive Clutch (.082”)(28 Teeth)(4.703”ID) 2011-Up	7	
236120B	Steel, 6R140 Overdrive Clutch (.062”)(28 Teeth)(4.703”ID) 2011-Up	7	
236124A	Steel, 6R140 Intermediate Clutch (.119”) (40 Teeth)(7 5/16”ID) 2011-Up (Also Fits 6R140 (Gas) Direct Clutch #126)	5-9	
236125A	Use 236127A	1	
236126A	Steel, 6R140 (Diesel) Direct Clutch (.083”) (40 Teeth)(7 5/16”ID) 2011-Up	5	BC3Z-7A098B
236127A	Steel, 6R140 Direct Clutch (.029”) (40 Teeth)(7 3/8”ID)(Waved) 2011-Up (Also Fits 6R140 Intermediate Clutch # 125)	1-2	
236128A	Steel, 6R140 Forward Clutch (.080”)(24 Teeth)(7”ID) 2011-Up	5	
236129A	Steel, 6R140 Forward Clutch (.033”)(24 Teeth)(7 1/8”ID)(Waved) 2011-Up	1	31484-41X00
236134A	Steel, 6R140 Low/Reverse Clutch (.078”) (27 Teeth)(7 3/4”ID) 2011-Up	5	BC3Z-7G276-A

© Whatever It Takes Transmission Parts. Inc.

236137AHP ....Friction/Steel Module, 6R140 2011-Up (With G3 Hi-Performance Direct, Overdrive And Intermediate Power Packs)(Alto) 1
236139A ....Steel Module, 6R140 (Gas Engine) 2011-Up 1
236139AA....Steel Module, 6R140 (Diesel Engine) 2011-Up 1

PART #	CLUTCH PRESSURE PLATES	QTY	REFERENCE #

236140A ....Pressure Plate, 6R140 Overdrive Clutch (.343") (28 Teeth)(4.700"ID) 2011-Up....1
236144A ....Pressure Plate, 6R140 Intermediate Clutch (.335")(40 Teeth)(7 5/16"ID) 2011-Up 1
236146A ....Pressure Plate, 6R140 Direct Clutch (.414")(40 Teeth)(7 5/16"ID) 2011-Up....1
236148A ....Pressure Plate, 6R140 Forward Clutch (.555")(24 Teeth)(7"ID) 2011-Up 1
236155A ....Apply Plate, 6R140 Low/Reverse Clutch (.199")(27 Teeth)(7 3/4"ID)(3 Lugs) (Cast # BC3P-7D408) 2011-Up....1

PART #	OIL SEALING RINGS	QTY	REFERENCE #

236175AT ....Ring Kit, 6R140 (Teflon) 2011-Up 1
236177AT ....Sealing Ring, 6R140 Turbine Shaft (Rear) To Stator (.089"Thick)(1.560"OD)(Teflon, Solid) 2011-Up 4
236178AT ....Sealing Ring, 6R140 Turbine Shaft (Front) To Convertor (.069"Thick)(1.050"OD)(Teflon, Solid) 2011-Up....1
236181AT ....Sealing Ring, 6R140 Stator To Forward/Direct Drum (.102"Thick)(Teflon, Solid) 2011-Up 3
236190AT ....Sealing Ring, 6R140 Pump Stator To Pump Cover (.077"Thick)(2.112"OD)(Teflon, Solid) 2011-Up....1

PART #	WASHERS & BEARINGS	QTY	REFERENCE #

236211AA ....Spacer, 6R140 Stator To Forward Sun Gear (.200"Thick)(2.413"OD) 2011-Up....1
236211AB ....Spacer, 6R140 Stator To Forward Sun Gear (.208"Thick)(2.413"OD) 2011-Up....1
236211AC ....Spacer, 6R140 Stator To Forward Sun Gear (.220"Thick)(2.413"OD) 2011-Up....1
236211AD ....Spacer, 6R140 Stator To Forward Sun Gear (.228"Thick)(2.413"OD) 2011-Up....1
236214A ....Bearing W/Races, 6R140 Overdrive Clutch Drum To Overdrive Clutch Hub (.370"Thick) (1.754"OD)(1.099"ID) 2011-Up....1
236217A ....Bearing W/Races, 6R140 Rear Planet To Output Shaft (.255"Thick)(3.000"OD)(1.944"ID) 2011-Up....1
236222A ....Caged Needle Bearing, 6R140 Rear Planet (Front)(.388"Thick)(3.704"OD)(Plastic Cage) 2011-Up....1
236223A ....Bearing W/Races, 6R140 Overdrive Clutch Hub To Forward Clutch Hub (.267"Thick) (2.337"OD)(1.423"ID) 2011-Up....1
236225A ....Race, 6R140 Direct Clutch Hub To Intermediate Clutch Housing (.122"Thick)(3.263"OD) (2.670"ID) 2011-Up....1
236226A ....Bearing W/Races, 6R140 Intermediate Clutch Housing To Reaction Sun Gear (.286"Thick) (3.305"OD)(2.550"ID) 2011-Up....1
236229A ....Bearing W/Races, 6R140 Direct Clutch Hub To Intermediate Clutch Housing (.157"Thick) (3.305"OD)(2.555"ID)(W/2 Tabs) 2011-Up 1
236235A ....Bearing W/Races, 6R140 Forward Cluych Hub To Direct Clutch Hub (.184"Thick)(2.910"OD) (2.023"ID) 2011-Up....1
236238AA....Bearing W/Races, 6R140 Forward Planet To Overdrive Drum (.114"Thick)(2.910"OD)(2.028"ID) 2011-Up....1
236238AB....Bearing W/Races, 6R140 Forward Planet To Overdrive Drum (.124"Thick)(2.910"OD)(2.028"ID) 2011-Up....1
236238AC....Bearing W/Races, 6R140 Forward Planet To Overdrive Drum (.132"Thick)(2.910"OD)(2.028"ID) 2011-Up....1
236238AD....Bearing W/Races, 6R140 Forward Planet To Overdrive Drum (.140"Thick)(2.910"OD)(2.028"ID) 2011-Up....1
236238AE....Bearing W/Races, 6R140 Forward Planet To Overdrive Drum (.148"Thick)(2.910"OD)(2.028"ID) 2011-Up....1
236247A ....Race, 6R140 Reaction Sun Gear To Rear Sun Gear (.214"Thick)(2.760"OD)(1.925"ID) 2011-Up.1
236248A ....Bearing W/Race, 6R140 Reaction Sun Gear To Rear Sun Gear (.215"Thick)(2.814"OD) (1.885"ID) 2011-Up....1
236263A ....Caged Needle Bearing, 6R140 Case To Output Shaft (1.156"Thick)(2.907"OD)(Cast # F505999) 2011-Up....2
236270A ....Bearing W/Races, 6R140 Output Shaft To Case (.253"Thick)(3.732"OD)(2.825"ID)(2 Outer Tabs) 2011-Up....1
236271A ....Spacer, 6R140 Case (Rear) To Output Shaft Nut (.192"Thick)(3.300"OD)(2.321"ID) 2011-Up 1
236272A ....Bearing W/Races, 6R140 Case (Rear) To Output Shaft Nut (.230"Thick)(3.144"OD)(2.217"ID) 2011-Up....1
236285-1A....Seal, 6R140 Valve Body To Low/Reverse Housing (Rubber Feed Tubes)(1.607"Long)(.585"OD) 2011-Up....1
236285A ....Retainer, 6R140 Snap Ring To Low Sprag (50 Teeth)(.042"Thick)(7 3/8"ID) 2011-Up 1

FORD

© Whatever It Takes Transmission Parts. Inc.

PART #	WASHERS & BEARINGS (Continued)	QTY	REFERENCE #
236286A	Retainer/Race, 6R140 Low Sprag (8 Tabs)(.036”Thick)(7 7/8”OD) 2011-Up	1	
236295A	Caged Needle Bearing, 6R140 Pump Body (.546”Thick)(2.780”OD)(2.505”ID) 2011-Up	1	

PART #	GASKETS & RUBBER COMPONENTS	QTY	REFERENCE #
236300AW	Gasket, 6R140 Bottom Pan (Bonded Rubber)(19 Bolt) 2011-Up	1	
236381A	Seal, 6R140 Valve Body To Pump Cover (Metal Clad)(.727”Thick)(1.156”OD) 2011-Up	1	
236382A	Seal, 6R140 Valve Body To Pump Cover (Rubber) 2011-Up	2	
236383A	Seal, 6R140 Valve Body To Pump Cover (Metal Clad)(.727” Thick)(1.156”OD) 2011-Up	1	
236384-1A	Seal, 6R140 Valve Body To Low/Reverse Housing (Rubber Feed Tube)(.641”Long)(.388”OD) 2011-Up	1	
236385-1A	Seal, 6R140 Valve Body To Low/Reverse Housing (Rubber Feed Tube)(1.607”Long)(.585”OD) 2011-Up	1	
236385A	Seal, 6R140 Valve Body To Pump Cover (2 Rubber Seals) 2011-Up	1	
236386-1A	Seal, 6R140 Valve Body (Rubber Feed Tubes)(.885”Long)(.585”OD) 2011-Up	3	
236386A	Seal, 6R140 Valve Body To Stator (5 Rubber Seals)(Cast #BC3P-7N265-B) 2011-Up	1	

PART #	ELECTRICAL COMPONENTS	QTY	REFERENCE #
236400A	Technical Manual, 6R140	1	
236410A	Neutral Safety Switch, 6R140 (W/Rooster Comb)(3 Blade Connector)(Cast # BC3P-7H557-DA) 2011-Up	1	
236420AA	Solenoid, 6R140 EPC (High)(Black)(#1) 2011-16	1	
236420AB	Solenoid, 6R140 EPC (High)(Black)(#2) 2011-16	1	
236420AC	Solenoid, 6R140 EPC (High)(Black)(#3) 2011-16	1	
236420AD	Solenoid, 6R140 EPC (High)(Black)(#4) 2011-16	1	
236420AE	Solenoid, 6R140 EPC (High)(Black)(#5) 2011-16	1	
236420BA	Solenoid, 6R140 EPC (Low)(Brown)(#1) 2011-16	1	
236420BB	Solenoid, 6R140 EPC (Low)(Brown)(#2) 2011-16	1	
236420BC	Solenoid, 6R140 EPC (Low)(Brown)(#3) 2011-16	1	
236420BD	Solenoid, 6R140 EPC (Low)(Brown)(#4) 2011-16	1	
236420BE	Solenoid, 6R140 EPC (Low)(Brown)(#5) 2011-16	1	
236436A	Sensor, 6R140 OSS (3 Prong Connector)(White Ink # 087101652) 2011-Up	1	
236437A	Sensor, 6R140 Temperature (2 Prong Connector)(Cast # BC3P-7H141-AA)(On Bottom Of Valve Body) 2011-Up	1	
236438A	Sensor, 6R140 ISS (3 Prong Connector)(White Ink # 087102698) 2011-Up	1	
236446A	Wire Harness, 6R140 Internal (16 Blade Case Connector)(Seven, 2 Blade Solenoid Connectors) (Three, 3 Prong Connector & One, 2 Prong Connector) 2011-Up	2	

PART #	MISCELLANEOUS COMPONENTS	QTY	REFERENCE #
236459A	Bracket, 6R140 Holds Solenoids On Valve Body 2011-Up	1	
236492A	Drain Plug, 6R140 Bottom Pan (13mm)(Bonded Rubber) 2011-Up	1	
236507A-2	Sleeve, 6R140 STator Tube (2 Ring Grooves)(Case Hardened)	1	

PART #	HARDPARTS	QTY	REFERENCE #
236510A	Pump Body, 6R140 W/Gears (Cast # RFBC3P-7A105-AD) 2011-Up	1	
236520A	Pump Cover, 6R140 (Aluminum)(Cast # BC3P-7A103-AF On Front Of Cover)(Non-PTO Type) 2011-Up	1	
236529A	Stator, 6R140 (Cast Iron)(Cast # RFBC3P-7N062-AD)(Non-PTO Type) 2011-Up	1	
236530A	Pump Gear Set, 6R140 (.737”Thick) (W/Inner Splines On Inner Gear) 2011-Up	1	
236544A	Plate, 6R140 Pump Cover To Stator (Metal)(Non-PTO Type) 2011-Up	1	
236548A	Apply Ring, 6R140 Direct Clutch (8 Legs)(2.400”Thick)(8 3/8”OD) 2011-Up	1	
236550A	Drum, 6R140 Overdrive Clutch (7 Clutch) (W/Turbine Shaft)(W/Forward Planet Ring Gear) 2011-Up	1	
236554A	Drum, 6R140 Forward/Direct Clutch (6 1/4”Tall)(5 Forward Clutch & 5 Direct Clutch) (With Bleed Hole) 2011-Up	1	
236554AA	Drum, 6R140 Forward/Direct Clutch (6 1/4”Tall)(5 Forward Clutch & 5 Direct Clutch) (Without Bleed Hole) 2011-Up	1	
236560A	Piston Kit, 6R140 O.Dr. Clu (Bonded)(Piston Cast #BC3P-7G418-AD)2011-Up	1	
236564A	Piston Kit, 6R140 Forward Clutch (Piston Cast # RFBC3P-7L140-AA) 2011-Up	1	
236565A	Piston Kit, 6R140 Direct Clutch (Piston Cast # RFCB3P-7C117-AB) 2011-Up	1	
236567A	Piston Kit, 6R140 Low/Reverse Clutch (Piston Cast # 7D402) 2011-Up	1	
236570A	Hub W/Shaft, 6R140 Overdrive Clutch (.918”OD Front Pilot)(.918”OD Rear Pilot) 2011-Up	1	
236574A	Hub, 6R140 Forward Clutch W/Hollow Shaft 2011-Up	1	
236575A	Hub, 6R140 Direct Clutch (W/4 Tabs)(Cast # BC3P-7H351-AC) 2011-Up	1	
236580A	Planet, 6R140 Rear (W/Sprag) (6 Gear)(W/Low/Reverse Clutch Hub) 2011-Up	1	

FORD

© Whatever It Takes Transmission Parts. Inc.

236582A	Forward Planet, 6R140 (4 Gear, Steel)(Uses 49 Teeth Sun Gear) 2011-Up	1
236610A	Sun Gear, 6R140 Rear Planet (37 Teeth, No Groove)(1.836”Thick) 2011-Up	1
236612A	Sun Gear, 6R140 Forward Planet (49 Teeth, No Groove)(1.107”Thick) 2011-Up	1
236614A	Sun Gear, 6R140 Reaction (47 Teeth, No Groove)(1.269”Thick) 2011-Up	1
236632A	Intermediate Clutch Housing, 6R140 (Aluminum)(5 Clutch)(Cast # RFBC3P-7L328-AE) 2011-Up	1
236639-1A	Support Spring, 6R140 Low Sprag Outer Race (Sets In Case)(Metal) 2011-Up	1
236639A	Keyway Lug, 6R140 Intermediate Clutch Housing To Case (.237”Thick)(.472”Wide)(1.168”Long) 2011-Up	2
236654A	Sprag Set, 6R140 Low (Contains: 8 Lugs & 8 Accordion Springs) 2011-Up	1
236665A	Outer Race, 6R140 Low Sprag (.893”Thick)(9 1/8”OD)(27 Outer Lugs) 2011-Up	1
236678A	Output Shaft, 6R140 4X4 (W/Ring Gear)(9 1/2” Overall Length)(20 Parking Lugs) 2011-Up	1
236698A	Oil Sleeve, 6R140 Valve Body To Pump Cover (Plastic)(1.285”OD) 2011-Up	1
236740A	Valve Body Assembly, 6R140 (Diesel) (7 Solenoid)(Metal Tag # 180A4789 & 1006243163828) 2011-Up	1

PART #	VALVE BODY COMPONENTS	QTY	REFERENCE #
S236741-6K	End Plug kit, 6R140 (Contains 5 Regulator End Plugs, 1 LPC End Plug, Eight 18mm O-Rings, Two 20mm O-Rings)(Sonnax)	1	
S236741-6CK	End Plug kit, 6R140 Internal O-Ringed (Contains Six End Plugs & Ten O-Rings)(Sonnax)	1	
S236741A-ZK	Zip Kit, 6R140 2011-Up (Sonnax)	1	
S236741CBK	Valve Kit, 6R140 TCC Apply Boost (Contains Valve & Sleeve)(Sonnax)	1	
S236741CCK	Valve Kit, 6R140 TCC Apply Regulator & Boost Valve (Contains TCC Apply Regulator Valve, Spring, Boost Valve & Boost Sleeve)(Must Use T-F-126740-TL15 & T-VB-Fix)(Sonnax)	1	
T-F-126740-TL15	Tool For S236741CCK	1	
T-VB-Fix	Valve Body Reaming Fixture (Sonnax)	1	
S236741CFK	Valve Kit, 6R140 TCC Charge Limit Valve (Oversized)(Contains Valve & Spring)(Must Use T-F-126740-TL & T-VB-Fix)(Sonnax)	1	
T-F-126740-TL	Tool Kit For S236741CFK	1	
S236741DK	Valve Kit, 6R140 Direct Clutch (Oversized)(Contains Valve & Spring)(Sonnax)(Must Use T-F-126740-TL11)	1	
T-F-126740-TL11	Tool Fo rS236741DK	1	
S236741FK	Valve Kit, 6R40 Converter Limit (Oversized)(Contains Valve, Spring, End Plug)(Must Use T-F-126740-TL19 & T-VB-Fix)(Sonnax)	1	
T-F-126740-TL19	Tool Fo rS236741FK	1	
S236741GK	Valve Kit, 6R140 Forward Clutch Regulator (Oversized)(Contains Valve, Spring, End Plug, Two O-Rings)(Must Use T-F-126740-TL13 & T-VB-Fix)(Sonnax)	1	
T-F-126740-TL13	Tool Kit For S236741GK	1	
S236741PK	Valve Kit, 6R140 Line Pressure Control (Oversized)(Contains Valve, Spring, End Plug, Two O-Rings)(Must Use T-F-126740-TL8 & T-VB-Fix)(Sonnax)	1	
T-F-126740-TL8	Tool Kit For S236741PK	1	

PART #	HARDPARTS (Continued)	QTY	REFERENCE #
236760A	Case, 6R140 (Diesel)(Cast # RFBC3P-7006-EE) 2011-Up	1	
236760B	Case, 6R140 (Diesel)(Cast # RFBC3P-7006-FF)(With PTO)(Top Bolts 4 3/4”)(Starter At 9:00) 2011-Up	1	
236765A	Pan, 6R140 4X4 Bottom (3 1/2” Deep In Center)(19 Bolt) 2011-Up	1	
236777AK	Bolt Set, 6R140 Pump Cover To Case (8 Pieces) 2011-Up	1	
236778AK	Bolt Set, 6R140 Stator To Body & Cover (13 Pieces) 2011-Up	1	
236779AK	Bolt Set, 6R140 Bottom Pan (19 Pieces) 2011-Up	1	
236790A	Bolt, 6R140 Holds Low/Reverse Clutch Housing In Case 2011-Up	1	
236795A	Nut, 6R140 Output Shaft (4 Holes)(.943”Thick)(3.108”OD) 2011-Up	1	
236797A	Nut, 6R140 Manual Lever (15mm) 2011-Up	1	
236861AA	Snap Ring, 6R140 Holds Overdrive Clutch Pressure Plate In (.080”Thick)(6 1/16”OD) 2011-Up	1	
236861AB	Snap Ring, 6R140 Holds Overdrive Clutch Pressure Plate In (.092”Thick)(6 1/16”OD) 2011-Up	1	
236861AC	Snap Ring, 6R140 Holds Overdrive Clutch Pressure Plate In (.104”Thick)(6 1/16”OD) 2011-Up	1	
236861AD	Snap Ring, 6R140 Holds Overdrive Clutch Pressure Plate In (.116”Thick)(6 1/16”OD) 2011-Up	1	
236861AE	Snap Ring, 6R140 Holds Overdrive Clutch Pressure Plate In (.128”Thick)(6 1/16”OD) 2011-Up	1	
236862A	Snap Ring, 6R140 Holds Overdrive Clutch Spring Retainer In Drum (.097”Thick)(1.688”OD) 2011-Up	1	
236873AA	Use U236876	1	
236874A	Retainer, 6R140 Holds Intermediate Clutch Return Spring In (4.208”OD)(2 Per Pack) 2011-Up	1	
236876AA	Snap Ring, 6R140 Holds Forward Clutch Pressure Plate In (.118”Thick)(9 1/8”OD) 2011-Up (Also Fits 6R140 Direct Clutch # 878)(Also Fits 6R140 Intermediate Clutch # 873)	1-3	
236876AB	Snap Ring, 6R140 Holds Forward Clutch Pressure Plate In (.126”Thick)(9 1/8”OD) 2011-Up (Also Fits 6R140 Direct Clutch # 878)(Also Fits 6R140 Intermediate Clutch # 873)	1-3	
236876AC	Snap Ring, 6R140 Holds Forward Clutch Pressure Plate In (.134”Thick)(9 1/8”OD) 2011-Up (Also Fits 6R140 Direct Clutch # 878)(Also Fits 6R140 Intermediate Clutch # 873)	1-3	

© Whatever It Takes Transmission Parts. Inc.

PART #	HARDPARTS (Continued)	QTY	REFERENCE #
236876AD	Snap Ring, 6R140 Holds Forward Clutch Pressure Plate In (.142”Thick)(9 1/8”OD) 2011-Up (Also Fits 6R140 Direct Clutch # 878)(Also Fits 6R140 Intermediate Clutch # 873)	1-3	
236876AE	Snap Ring, 6R140 Holds Forward Clutch Pressure Plate In (.150”Thick)(9 1/8”OD) 2011-Up (Also Fits 6R140 Direct Clutch # 878)(Also Fits 6R140 Intermediate Clutch # 873)	1-3	
236876AF	Snap Ring, 6R140 Holds Forward Clutch Pressure Plate In (.158”Thick)(9 1/8”OD) 2011-Up (Also Fits 6R140 Direct Clutch # 878)(Also Fits 6R140 Intermediate Clutch # 873)	1-3	
236876AG	Snap Ring, 6R140 Holds Forward Clutch Pressure Plate In (.166”Thick)(9 1/8”OD) 2011-Up (Also Fits 6R140 Direct Clutch # 878)(Also Fits 6R140 Intermediate Clutch # 873)	1-3	
236876AH	Snap Ring, 6R140 Holds Forward Clutch Pressure Plate In (.174”Thick)(9 1/8”OD) 2011-Up (Also Fits 6R140 Direct Clutch # 878)(Also Fits 6R140 Intermediate Clutch # 873)	1-3	
236877A	Snap Ring, 6R140 Holds Forward Clutch Support/Retainer In Drum (.056”Thick)(3.580”OD) 2011-Up	1	
236878AA	Use U236876	1	
236879A	Snap Ring, 6R140 Holds Direct Clutch Spring Retainer In Drum (.099”Thick)(Oval Shaped) 2011-Up	1	
236882A	Snap Ring, 6R140 Holds Forward Planet To Forward/Direct Drum Support (.037”Thick) (6 1/4”OD) 2011-Up	1	
236883A	Snap Ring, 6R140 Holds Intermediate Clutch Housing To Case (.173”Thick)(10 3/16”OD) 2011-Up	1	
236884A	Snap Ring, 6R140 Holds Low Sprag To Rear Planet (.063”Thick)(8 11/16”OD) 2011-Up	1	
236885A	Snap Ring, 6R140 Holds Low/Reverse Clutch Piston Retainer In (.079”Thick)(4.366”OD) 2011-Up	1	
236957A	Low/Reverse Housing, 6R140 (Aluminum)(Cast # 7F341) 2011-Up	1	
236960A	Piston, 6R140 Overdrive Clutch (Bonded)(Cast # BC3P-7G418-AD) 2011-Up	1	
236960AK	Piston Set, 6R140 TorqShift 2011-Up	1	
236962A	Piston, 6R140 Intermediate Clutch (Aluminum) (8 5/8”OD)(Cast #RFBC3P-7J015-AB) 2011-Up	1	
236964A	Piston, 6R140 Forward Clutch (Aluminum)(7 3/4”OD)(Cast #RFCB-7L140-AA) 2011-Up	1	
236965A	Piston, 6R140 Direct Clutch (Aluminum) (Cast # RFBC3P-7C117-AB) 2011-Up	1	
236967A	Piston, 6R140 Low/Reverse Clutch (Aluminum)(4 Clutch)(Cast # 7D402) 2011-Up	1	
236970A	Spring Retainer, 6R140 Overdrive Clutch Return (3 7/8”OD)(20 Spring) 2011-Up	1	
236972A	Spring, 6R140 Intermediate Clutch Return (6 1/2”OD)(12 Fingers) 2011-Up	1	
236974A	Spring Retainer, 6R140 Forward Clutch Return (6 1/2”OD)(28 Springs) 2011-Up	1	
236975A	Spring Retainer, 6R140 Direct Clutch Return (6 7/8”OD)(32 Springs) 2011-Up	1	
236977A	Spring/Retainer, 6R140 Low/Reverse Clutch Return (5 7/8”OD)(30 Springs) 2011-Up	1	
236980A	Retainer/Piston, 6R140 Overdrive Clutch Spring (Bonded)(Cast #BC3P-AH) 2011-Up	1	
236984A	Support/Retainer, 6R140 Forward Clutch Spring (Also The Forward Planet Support)(7 3/8”OD) (Steel) 2011-Up	1	
236985A	Retainer, 6R140 Direct Clutch Spring (Aluminum)(7 7/8”OD)(Cast #RFBC3P-7H359-AB) 2011-Up	1	
236991-4A	Manual Shaft, 6R140 Manual Lever To Rooster Comb (.499”OD)(3.951”Long) 2011-Up	1	
236992A	Manual Lever, 6R140 (Cast # BC3P-7G354-CA) 2011-Up	1	
236994A	Park Rod Actuator, 6R140 (9” Long) 2011-Up	1	
236995A	Park Pawl Assembly, 6R140 (5 Pieces) 2011-Up	1	
236999-8A	Oil Tube, 6R140 Valve Body To Intermediate Clutch Housing (Aluminum)(1 Bolt)(2.985”Long) 2011-Up	1	
236999A	Oil Tubes, 6R140 Valve Body To Low/Reverse Housing (Steel, 2 Tubes) 2011-Up	1	

FORD

© Whatever It Takes Transmission Parts. Inc.

Raybestos POWERTRAIN

IT'S OE DEDICATION THAT DRIVES AFTERMARKET INNOVATION



INTRODUCING THE MAXPAK

Stage-1 friction and steel clutch plates increase performance beyond OE clutch pack designs with added capacity packaged in one convienent module. Stage-1 Performance frictions handle the demands that stock tan or high energy plates can't by increasing holding capacity, while withstanding higher temperatures.

MAXPAK

FORD 5R110W PERFORMANCE CLUTCH PACKS

LOW, REVERSE STAGE-1 MAXPAK 2003-2007 | 136110AMPK
COAST STAGE-1 MAXPAK 2003-ON | 136112AMPK
DIRECT GPZ TORQKIT 2003-ON | 136106AHPK
FORWARD GPZ TORQKIT 2003-2004 | 136108AHPK
FORWARD GPZ TORQKIT 2005-2010 | 136108AAHPK
OVERDRIVE GPZ TORQKIT 2003-ON | 136100AHPK

MADE IN THE USA | OE SUPPLIER

RaybestosPowertrain | RaybestosPower
1.800.686.4729 | RaybestosPowertrain.com

002
Overhaul Kit

004
Master L/ Steels Kit

006
Master W/ Steels Kit

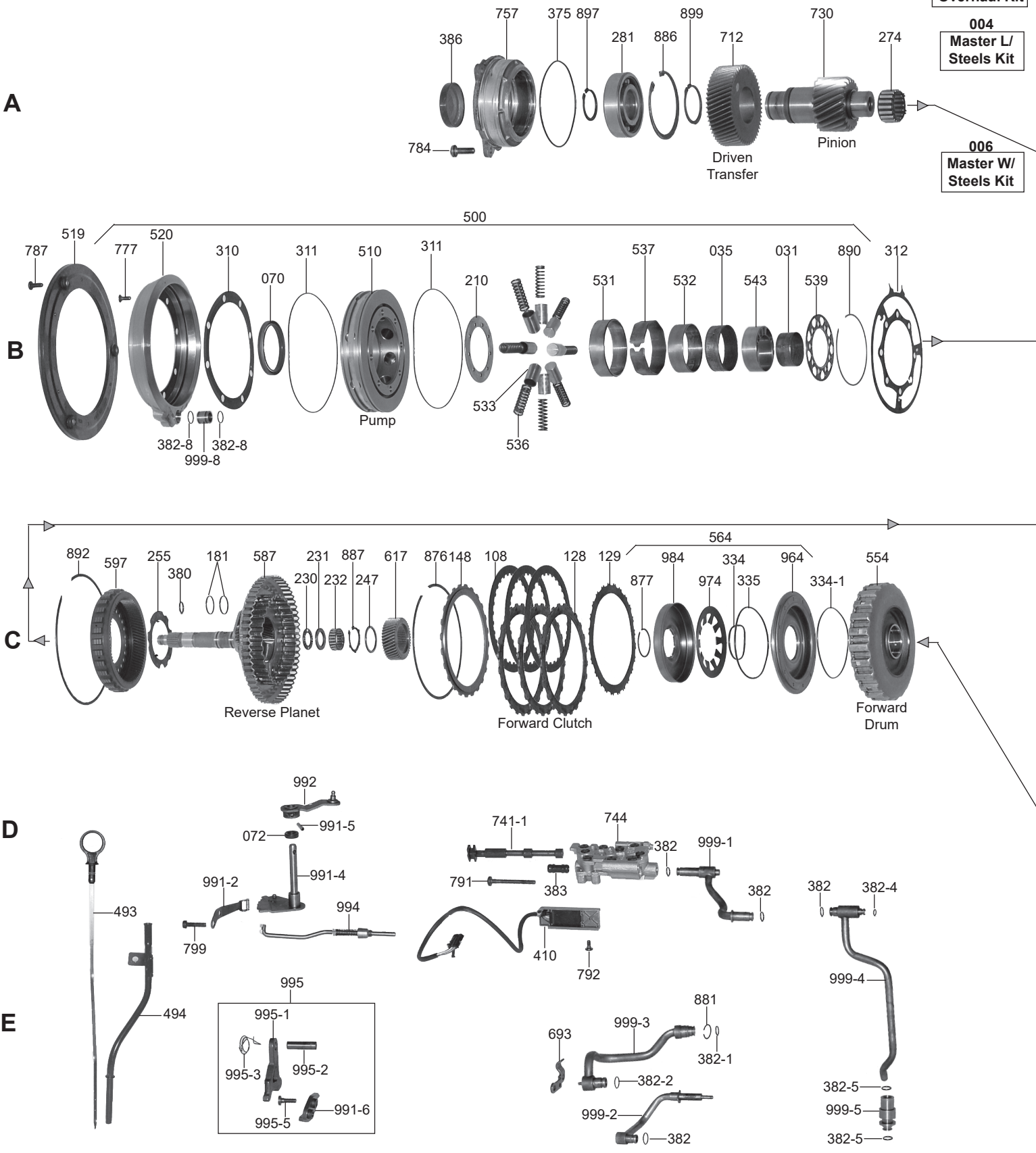

© Whatever It Takes Transmission Parts. Inc.

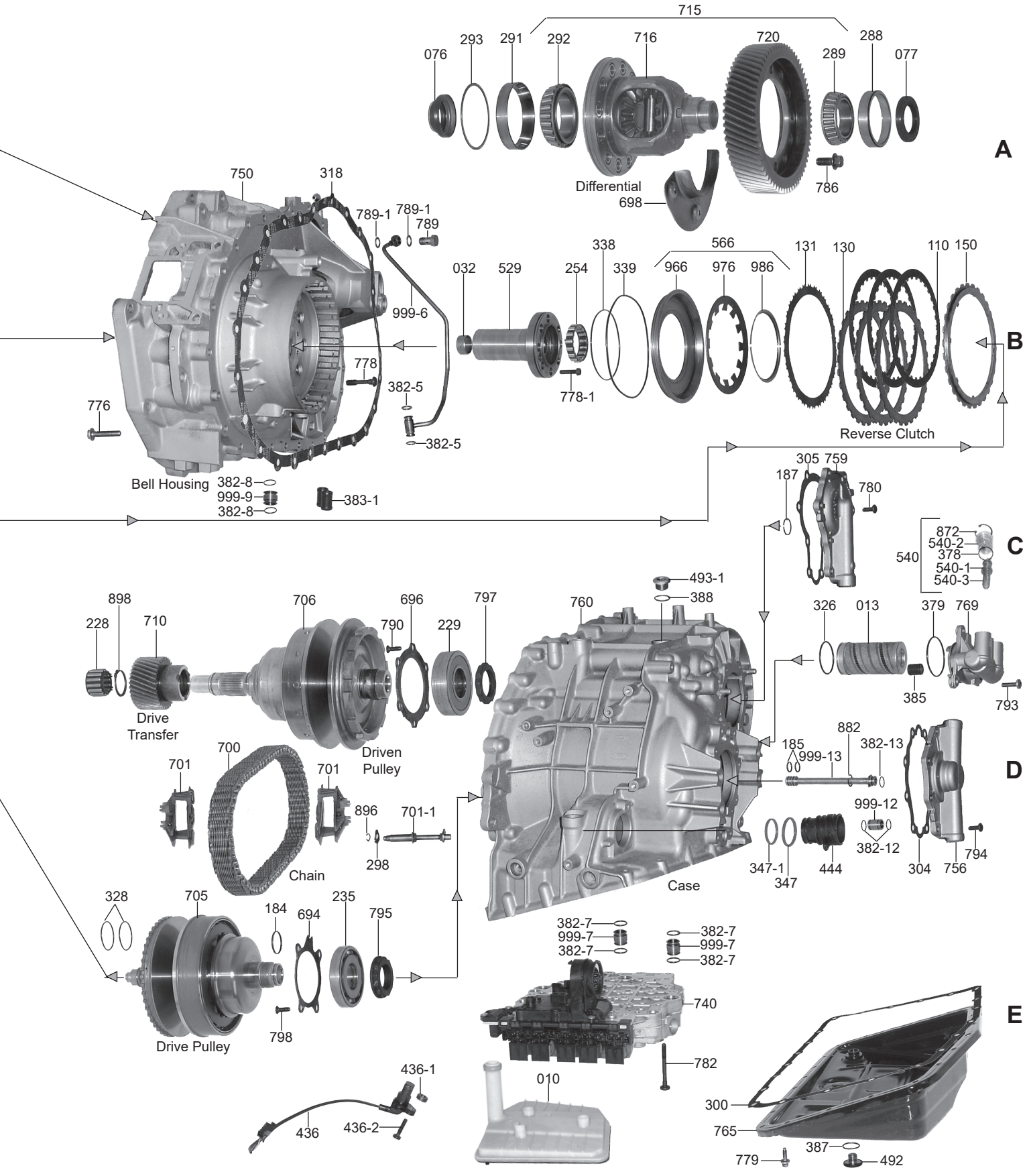

FORD

© Whatever It Takes Transmission Parts. Inc.

PART #	OVERHAUL KITS	QTY	REFERENCE #
206002A	Overhaul Kit, CFT30 2005-Up	1	

PART #	MASTER L/STEELS KIT	QTY	REFERENCE #
206004A	Master L/Steels Kit, CFT30 2005-Up	1	

PART #	MASTER W/STEELS KIT	QTY	REFERENCE #
206006A	Master W/Steels Kit, CFT30 2005-Up	1	

PART #	FILTERS	QTY	REFERENCE #
206010A	Filter, CFT30 (ZF, CVT) Main 2005-Up	1	
206013A	Filter, CFT30 (ZF, CVT) Cartridge 2005-Up	1	

PART #	BUSHINGS	QTY	REFERENCE #
206032A	Bushing, CFT30 Convertor Reactor (Inner, Front)(.985”OD)(.888”ID) 2005-Up	1	

PART #	METAL CLAD SEALS	QTY	REFERENCE #
206070A	Seal, CFT30 Front Pump (2.955”OD)(2.390”ID) 2005-Up	1	
206076A	Seal, CFT30 Axle (Bell Housing Side) 2WD (.785”Thick)(2.380”OD)(1.550”ID) 2005-Up	1	
206076AB	Seal, CFT30 Axle (Bell Housing Side) AWD (3.000”OD) 2005-Up	1	

PART #	FRICTIONS	QTY	REFERENCE #
206108A	Friction, CFT30 Forward Cluych (.076”(30 Teeth)(5.780”OD)(Hi-Energy) 2005-Up	3	
206110A	Friction, CFT30 Reverse Clutch (.062”)(30 Teeth)(6.555”OD)(Hi-Energy) 2005-Up	3	

PART #	STEELS	QTY	REFERENCE #
206128A	Steel, CFT30 (ZF, CVT) Forward Clutch (.071”)(24 Teeth)(4.885”ID) 2005-Up	3	
206129A	Cushion, CFT30 Forward Clutch (.038”)(24 Teeth)(4.930”ID)(Waved) 2005-Up	1	
206130A	Steel, CFT30 (ZF, CVT) Reverse Clutch (.069”)(30 Teeth)(5.625”ID) 2005-Up	3	
206131A	Cushion, CFT30 Reverse Clutch (.034”)(30 Teeth)(5.640”ID)(Wavy) 2005-Up	1	

PART #	PRESSURE PLATES	QTY	REFERENCE #
206148A	Pressure Plate, CFT30 Forward Clutch (.138”)(24 Teeth)(4.885”ID)(Stepped) 2005-Up	1	
206150A	Pressure Plate, CFT30 Reverse Clutch (.197”)(30 Teeth)(5.630”ID)(Stepped) 2005-Up	1	

PART #	SEALING RINGS	QTY	REFERENCE #
206181AT	Sealing Ring, CFT30 Input Shaft To Convertor Reactor (.075”Wide)(.985”OD)(Teflon) 2005-Up	2	
206184A	Sealing Ring, CFT30 Drive Pulley (Rear) (.097”Thick)(1.270”OD) (Lock-Joint)(Metal) 2005-Up	1	
206185AT	Sealing, Ring, CFT30 Driven Pulley Oil Tube (Front)(.075”Thick)(.555”OD)(Teflon) 2005-Up	2	
206187AT	Sealing Ring, CFT30 Drive Pulley Shaft To Rear Cover (.070”Thick)(.925”OD)(1 Tab)(Teflon) 2005-Up	1	

PART #	WASHERS & BEARINGS	QTY	REFERENCE #
206210A	Washer, CFT30 Pump Body To Rotor (.074”Thick)(3.655”OD)(2.385”ID)(9 Round Holes) 2005-Up	1	
206228A	Caged Needle Bearing, CFT30 Driven Pulley Shaft To Bell Housing (1.055”Thick)(1.470”OD) (14 Roller With Plastic Cage) 2005-Up	1	
206229A	Ball Bearing, CFT30 Driven Pulley Shaft To Case (.905”Thick)(3.545”OD)(1.575”ID) (Cast # NSK 40TM16A) 2005-Up	1	
206230A	Bearing, CFT30 Reverse Planet (Rear) To Drive Pulley (.079”Thick)(1.170”OD)(.675”ID) 2005-Up	1	
206231A	Race, CFT30 Reverse Planet (Rear) To Drive Pulley (.086”Thick)(1.165”OD)(.735”ID) 2005-Up	1	
206232A	Caged Needle Bearing, CFT30 Reverse Planet To Drive Pulley (.420”Thick)(1.170”OD) 2005-Up	1	
206235A	Ball Bearing, CFT30 Drive Pulley Shaft To Case (.707”Thick)(3.345”OD)(1.435”ID) (Cast # NSK B35-181) 2005-Up	1	
206247A	Shim, CFT30 Snap Ring # 887 To Reverse Sun Gear (.079”Thick)(1.455”OD)(1.180”ID) 2005-Up	1	

FORD

© Whatever It Takes Transmission Parts. Inc.

206254A ..... Caged Roller Bearing, CFT30 Converter Reactor To Reverse Planet (15 Rollers)(With Plastic Cage)(1.560”ID) 2005-Up 1
206255A ..... Washer, CFT30 Reverse Clutch Hub To Reverse Planet (3 Inner Tabs)(3.123”OD)(2.115”ID) 2005-Up 1
206274A ..... Caged Needle Bearing, CFT30 Pinion Shaft To Bell Housing (.972”Thick)(1.785”OD)(With 10 Legs On Plastic Cage) 2005-Up 1
206281A ..... Ball Bearing, CFT30 Pinion Shaft To Pinion Cover (.905”Thick)(3.545”OD)(1.575”ID) (Cast # SKF 6308 TN9/C3h) 2005-Up 1
206288A ..... Cup Race, CFT30 Differential To Case (3.150”OD)(Cast # SKF 32010X/Q) 2005-Up 1
206289A ..... Cone Bearing, CFT30 Differential To Case (25 Rollers)(1.865”ID) (Cast # SKF 32010X/Q 17 138B) 2005-Up 1
206291A ..... Cup Race, CFT30 Differential To Bell Housing (.688”Thick)(3.740”OD)(3.190”ID) (Cast # SKF 32012X7QCL7C) 2005-Up 1
206292A ..... Cone Bearing, CFT30 Differential To Bell Housing (26 Rollers)(2.360”ID) (Cast # SKF 32012X7QCL7C) 2005-Up 1
206293AA ..... Shim, CFT30 Differential Bearing Cup Race To Bell Housing (Selective)(3.685”OD)(3.355”ID) 2005-Up 1
206298A ..... Spacer, CFT30 Goes On Belt Guide Adjusting Rod (.059”Thick)(Triangle Shaped) 2005-Up 1

PART #	GASKETS & RUBBER COMPONENTS	QTY	REFERENCE #

206300A ..... Pan Gasket, CFT30 Bottom Pan (22 Bolt) 2005-Up 1
206304A ..... Gasket, CFT30 Driven Pulley Rear Cover To Case (8 Bolt) 2005-Up 1
206305A ..... Gasket, CFT30 Driven Pulley Rear Cover To Case (8 Bolt Holes) 2005-Up 1
206310A ..... Gasket, CFT30 Pump Outer Housing To Pump Body (Metal) (8 Bolt Holes) (6 1/2”OD)(5 1/8”ID) 2005-Up 1
206311A ..... O-Ring, CFT30 Pump Body To Outer Pump Housing (Takes 2) 2005-Up 2
206312A ..... Gasket, CFT30 Pump Body To Bell Housing (Metal) (8 Bolt Holes)(6 5/8”OD)(3.555”ID) 2005-Up 1
206318A ..... Gasket, CFT30 Bell Housing To Case (26 Bolt Holes) 2005-Up 1
206338A ..... O-Ring, CFT30 Reverse Clutch Piston (Inner) (3.580”ID) 2005-Up 1
206339A ..... O-Ring, CFT30 Reverse Clutch Piston (Outer) (5.880”OD) 2005-Up 1
206347-1A ..... O-Ring, CFT30 Case Connector (Small) (.079”Thick)(1.430”OD) (Ribbed) 2005-Up 1
206347A ..... O-Ring, CFT30 Case Connector (Large) (.079”Thick)(1.575”OD) (Ribbed) 2005-Up 1
206375A ..... O-Ring, CFT30 Pinion Cover To Case (.098”Thick)(4.820”OD) 2005-Up 1
206378A ..... O-Ring, CFT30 By-Pass Valve Plug (.076”Thick)(.880”OD) 2005-Up 1
206379A ..... O-Ring, CFT30 Cartridge Filter Cover (.102”Thick)(2.300”OD) 2005-Up 1
206380A ..... O-Ring, CFT30 Input Shaft (Reverse Planet Shaft) To Converter 2005-Up 1
206382-12A ..... O-Ring, CFT30 Driven Pulley Cover To Sleeve To Case (.062”Thick)(.598”OD) 2005-Up 2
206382-13A ..... O-Ring, CFT30 Driven Pulley Tube (Rear)(.082”Thick)(.555”OD) 2005-Up 1
206382-1A ..... O-Ring, CFT30 Case Tube # 999-3 (Drive Pulley Cover End)(.061”Thick)(.575”OD) 2005-Up 1
206382-2A ..... O-Ring, CFT30 Case Tube # 999-3 (Case End)(.059”Thick)(.592”OD) 2005-Up 1
206382-4A ..... O-Ring, CFT30 Case/Auxillary Valve Body Tube # 999-4 (Case End)(.056”Thick)(.350”OD) 2005-Up 1
206382-5A ..... O-Ring, CFT30 Valve Body Tube Sleeve (.077”Thick)(.525”OD) (Takes 2) 2005-Up (Also Fits CFT30 Valve Body Tube # 999-6 (Takes 2) 2005-Up) 2-4
206382-7A ..... O-Ring, CFT30 Valve Body To Sleeve To Case (.078”Thick)(.720”OD) 2005-Up 4
206382-8A ..... O-Ring, CFT30 Valve Body To Sleeve To Bell (.077”Thick)(.708”OD) 2005-Up (Also Fits CFT30 Pump To Sleeve To Bell 2005-Up) 2-4
206382A ..... O-Ring, CFT30 Auxillary Valve Body Tube # 999-1 (Both Ends)(.058”Thick)(.475”OD) 2005-Up (Also Fits CFT30 Case Tube # 999-2 (Case End) (Also Fits CFT30 Case Tube # 999-4 (Auxillary Valve Body End) 1-4
206383-1A ..... Twin Rubber Sleeves, CFT30 Valve Body To Bell (.870”Long)(.535”OD)(.310”OD) 2005-Up 1
206383A ..... Tube/Seal, CFT30 Auxillary Valve Body (Bonded)(1.085”Long)(.455”OD)(.225”ID) 2005-Up 1
206385A ..... Tube/Seal, CFT30 Filter Cover To Case (Bonded)(.720”Long)(.600”OD)(.395”ID) 2005-Up 1
206386A ..... Seal Cap, CFT30 Pinion Cover (Bonded)(.505”Thick)(2.371”OD) 2005-Up 1
206387A ..... O-Ring, CFT30 Drain Plug (.066”Thick)(1.002”OD) 2005-Up 1

PART #	ELECTRICAL COMPONENTS	QTY	REFERENCE #

206410A ..... Sensor, CFT30 Transmission Range (Reads Off The Manual Valve) (2 Bolt) (6 Pin Connector) (Cast # 0501213485) 2005-Up 1
206420A ..... Solenoid Assembly, CFT30 (5 Solenoids) (16 Pin Connector) (11 Brass Rivits) (Cast # 0501 213 789) 2005-Up 1
206436-1A ..... Spacer, CFT30 Output Speed Sensor Bolt (.227”Thick)(.630”OD)(.260”ID) 2005-Up 1
206436A ..... Sensor, CFT30 Output Speed (12 7/8”Long Wire Harness W/4 Pin Connector) 2005-Up 1

© Whatever It Takes Transmission Parts. Inc.

PART #	MISCELLANEOUS COMPONENTS	QTY	REFERENCE #
206444A	Case Connector, CFT30 (1 Bolt) (2.033"Long)(Plastic) 2005-Up	1	
206492A	Plug, CFT30 Drain (6mm Allen Head) 2005-Up	1	

PART #	HARDPARTS	QTY	REFERENCE #
206500A	Pump Assembly, CFT30 (8 Piston & Spring Type)(Cast # 8645501200C On Pump Body # 510) 2005-Up	1	
206519A	Plate, CFT30 Front Seal Pump (Bonded)(9 5/8"OD)(6 15/16"ID) (Cast # 5F97-7B325AA) 2005-Up	1	
206529A	Converter Reactor, CFT30 (4.390" Long) 2005-Up	1	
206540AK	By-Pass Valve Assembly, CFT30 In The Cartridge Filter Cover 2005-Up	1	
206554A	Drum, CFT30 Forward Clutch (3 Clutch) (24 Teeth Steels) (6 5/16"OD) (Stamped Steel, W/Cast Iron Center) 2005-Up	1	
206564A	Piston Kit, CFT30 Forward Clutch (Steel Piston, .700"Thick, 5.560"OD, 1.815"ID) 2005-Up	1	
206566A	Piston Kit, CFT30 Reverse Clutch (Steel Piston, 6 1/4"OD) 2005-Up	1	
206587A	Planet, CFT30 Reverse (With Input Shaft) (6 Gear)(7 5/8"Long)(30 Teeth Clutch Hub)(27 Input Splines) 2005-Up	1	
206597A	Hub, CFT30 Reverse Clutch (30 Teeth Hub) (84 Teeth Ring Gear) 2005-Up	1	
206617A	Sun Gear, CFT30 Reverse Planet (42 Teeth, 1 Groove) 2005-Up	1	
206693A	Bracket, CFT30 Holds The 2 Case Tubes In (2 Bolt) 2005-Up	1	
206694A	Retainer, CFT30 Holds Bearing # 235 To Case (4 Bolt) 2005-Up	1	
206696A	Retainer, CFT30 Driven Pulley Bearing To Case (6 Bolt) 2005-Up	1	
206698A	Oil Deflector, CFT30 Differential (3 Bolt, Tin) 2005-Up	1	
206700A	Drive Chain, CFT30 Pulley (1.350"Wide) (75 Pins) 2005-Up	1	
206701-1A	Adjusting Rod, CFT30 Belt (3.625"Long)(Goes Into Case) 2005-Up	1	
206701AK	Guide Set, CFT30 Pulley Belt (Plastic, 2 Pieces Snap Together)(Upper & Lower)(Takes 2 Sets Per Transmission) 2005-Up	2	
206705A	Drive Pulley, CFT30 (With 9 1/2" Long Shaft) 2005-Up	1	
206706A	Driven Pulley, CFT30 (With 11 3/4" Long Shaft) 2005-Up	1	
T-CFT30AC	Tool, CFT30 Socket To Take Drive & Driven Pulley Nuts Off	1	
206710A	Gear, CFT30 Drive Transfer (34 Teeth, 2 Groove)(2.625"Long)(2.850"OD) 2005-Up	1	
206712A	Driven Transfer Gear, CFT30 (54 Teeth, 2 Groove)(1.415"Thick)(4.380"OD)(1.960"ID) 2005-Up	1	
206715A	Differential, CFT30 2WD (69 Teeth, 12 Bolt) (25 & 26 Roller Bearing)(7 1/8" Tall Housing) (Cast # 4481 415 003) 2005-Up	1	
206715AB	Differential, CFT30 AWD (69 Teeth, 12 Bolt) (25 & 26 Roller Bearing)(8 3/16" Tall Housing) (Cast # 4481 415 003) 2005-Up	1	
206730A	Pinion Gear, CFT30 (22 Teeth, 2.895"OD)(5.712" Long Shaft) 2005-Up	1	
206740A	Valve Body, CFT30 With 5 Solenoids (Cast # 1072-427-048 Or 1072-427-059) 2005-Up	1	
206741M-1	Valve, CFT30 Manual (Aluminum) (4.840" Long) 2005-Up	1	
206744A	Auxillary Valve Body, CFT30 (2 Bolts To Case) (Cast # 1072 427 043) 2005-Up	1	
206750A	Bell Housing, CFT30 2WD (3 1/4" Top Bolts)(Square Open Starter At 2:00) (Cast # 1072,422,033 ZF On Top)(Has No Threaded Bosses By Axle Seal) 2005-Up	1	
206750AB	Bell Housing, CFT30 AWD (3.000"OD Axle Seal)(Has 4 Threaded Bosses By The Axle Seal) 2005-Up	1	
206756A	Rear Cover, CFT30 Driven Pulley (Aluminum, 8 Bolt)(Cast # 1972-401-104) 2005-Up	1	
206757A	Cover, CFT30 Pinion (Aluminum, 4 Bolt)(Cast # 1072 414 027) 2005-Up	1	
206759A	Rear Cover, CFT30 Drive Pulley (Aluminum, 8 Bolt)(Cast # 1672-401-095) 2005-Up	1	
206760A	Case, CFT30 (Cast # 1072 401 109) 2005-Up	1	
206765A	Pan, CFT30 Bottom (22 Bolts) (4" Deep To 7/8" Deep) 2005-Up	1	
206769A	Cover, CFT30 Cartridge Filter (Aluminum, 3 Bolt) 2005-Up	1	
206776AK	Bolt Set, CFT30 Bell Housing To Case (26 Pieces) 2005-Up	1	
206777AK	Bolt Set, CFT30 Outer Pump Housing To Pump Body (8 Pieces) 2005-Up	1	
206778-1AK	Bolt Set, CFT30 Converter Reactor To Bell Houisng (7 Pieces) 2005-Up	1	
206778AK	Bolt Set, CFT30 Pump To Bell Housing (8 Pieces) 2005-Up	1	
206779AK	Bolt Set, CFT30 Bottom Pan (22 Pieces) 2005-Up	1	
206780AK	Bolt Set, CFT30 Drive Pulley Rear Cover (8 Pieces) 2005-Up (Also Fits CFT30 Driven Pulley Rear Cover (8 Pieces) 2005-Up)	1-2	
206782AK	Bolt Set, CFT30 Valve Body To Case (17 Pieces) 2005-Up	1	
206784AK	Bolt Set, CFT30 Pinion Cover To Bell Housing (4 Pieces) 2005-up	1	
206786AK	Bolt Set, CFT30 Differential Ring Gear (12 Pieces) 2005-Up	1	
206787AK	Bolt Set, CFT30 Front Bonded Seal Plate (3 Pieces) 2005-Up	1	
206789-1A	Washer, CFT30 Bolt To Tube # 999-6 To Bell (Aluminum) (.046" Thick)(.583"OD)(.405"ID) 2005-Up	2	
206789A	Bolt, CFT30 Tube # 999-6 To Bell (Hollow)(.985"Long) 2005-Up	1	
206790AK	Bolt Set, CFT30 Driven Pulley Bearing Retainer (6 Pieces) 2005-Up	1	
206791AK	Bolt Set, CFT30 Auxillary Valve Body To Case (2 Pieces) 2005-Up	1	
206792AK	Bolt Set, CFT30 Transmission Range Sensor (2 Pieces) 2005-Up	1	
206793AK	Bolt Set, CFT30 Cartridge Filter Cover (3 Pieces) 2005-Up	1	

© Whatever It Takes Transmission Parts. Inc.

206794AK.....Use U206780AK .....1 .....
206795A.....Nut, CFT30 Drive Pulley Shaft (12 Point)(50mm Head) 2005-Up.....1 .....
206797A.....Nut, CFT30 Driven Pulley Shaft (50mm Head) 2005-Up .....1 .....
206798AK.....Bolt Set, CFT30 Drive Pulley Bearing Retainer (4 Pieces) 2005-Up .....1 .....
206799AK.....Bolt Set, CFT30 Detent Spring (2 Pieces) 2005-Up.....1 .....
206872A.....Snap Ring, CFT30 Holds By-Pass Valve In (.050”Thick)(1.092”OD) 2005-Up .....1 .....
206876A.....Snap Ring, CFT30 Holds Forward Clutch Pressure Plate In (.053”Thick) (6 5/16”OD) 2005-Up ...1 .....
206877A.....Snap Ring, CFT30 Holds Forward Drum & Retainer To The Drive Pulley Shaft (.058”Thick)
.....(1.548”OD) 2005-Up .....1 .....
206881A.....Snap Ring, CFT30 Holds Tube # 999-3 To Case (.045”Thick)(.766”OD) 2005-Up.....1 .....
206882A.....Snap Ring, CFT30 Holds Tube # 999-13 To Rear Cover (.045”Thick)(.655”OD) 2005-Up.....1 .....
206886A.....Snap Ring, CFT30 Holds Brg # 281 To Pinion Cover (.116”Thick)(3.775”OD)(W/2 Eyelets)
.....2005-Up .....1 .....
206887A.....Snap Ring, CFT30 Holds Reverse Sun Gear To Drive Pulley (.060”Thick)(1.100”ID)(2 Eyelets,
.....With 4 Outer Tabs) 2005-Up.....1 .....
206890A.....Snap Ring, CFT30 Holds Rotor Assembly In Pump Body (.055”Thick)(3.920”OD) 2005-Up .....1 .....
206892A.....Snap Ring, CFT30 Holds Reverse Clutch Pressure Plate In (.053”Thick)(7 1/8”OD) 2005-Up.....1 .....
206896A.....Snap Ring, CFT30 Holds Spacer # 298 On Adjusting Rod (.038”Thick)(.407”OD) 2005-Up.....1 .....
206897A.....Snap Ring, CFT30 Holds Bearing # 281 To Pinion Shaft # 730 2005-Up.....1 .....
206898A.....Snap Ring, CFT30 Holds Drive Transfer Gear To Driven Pulley Shaft (.093”Thick)(1.460”OD)
.....(W/2 Eyelets) 2005-Up.....1 .....
206899A.....Snap Ring, CFT30 Holds Driven Transfer Gear To Pinion Shaft (.097”Thick)(2.093”OD)
.....(W/2 Eyelets) 2005-Up.....1 .....
206964A.....Piston, CFT30 Forward Clutch (Steel)(.700”Thick)(5.560”OD)(1.815”ID) 2005-Up .....1 .....
206966A.....Piston, CFT30 Reverse Clutch (Steel) (1.865”Thick)(6 1/4”OD)(3.595”ID) 2005-Up.....1 .....
206974A.....Spring, CFT30 Forward Clutch Return (.059”Thick)(3.895”OD)(10 Fingers) 2005-Up .....1 .....
206976A.....Spring, CFT30 Reverse Clutch Return (.069”Thick)(5.400”OD)(12 Fingers) 2005-Up .....1 .....
206984A.....Retainer, CFT30 Forward Clutch Return Spring (.715”Thick)(4.315”OD)(1.485”ID) 2005-Up .....1 .....
206986A.....C Clips, CFT30 Holds Reverse Clutch Piston Return Spring In (.160”Thick)(2 Pieces) 2005-Up ..1 .....
206991-2A.....Spring, CFT30 Rooster Comb Detent (3.555”Long)(2 Bolt) 2005-Up .....1 .....
206991-4A.....Rooster Comb, CFT30 (3.385”Long Shaft) 2005-Up .....1 .....
206991-5A.....Roll Pin, CFT30 Holds Shift Lever To Manual Shaft (.880”Long)(.203”OD) 2005-Up .....1 .....
206992A.....Shift Lever, CFT30 External (3.100”Long)(With Ball) 2005-Up .....1 .....
206994A.....Park Rod Actuator, CFT30 (7” Long) 2005-Up.....1 .....
206995A.....Park Pawl Assembly, CFT30 (6 Pieces) 2005-Up.....1 .....
206999-12A....Oil Sleeve, CFT30 Driven Pulley Cover To Case (.700”Long)(.570”OD)(.398”ID)
.....(Uses 2 O-Rings) 2005-Up.....1 .....
206999-13A....Tube, CFT30 Driven Pulley To Rear Cover (5.325”Long)(Uses 2 Sealing Rings & 1 O-Ring)
.....2005-Up .....1 .....
206999-1A.....Tube, CFT30 Auxillary Valve Body To Case (2.260”Long At T End) 2005-Up.....1 .....
206999-2A.....Tube, CFT30 Case To Belt Oiler (With T Connector On Case End) 2005-Up.....1 .....
206999-3A.....Tube, CFT30 Case To Drive Pulley Rear Cover (With T Connector On Case End) 2005-Up.....1 .....
206999-4A.....Tube, CFT30 Valve Body To Case & To Auxillary Valve Body (With 2 O-Rings On The T)
.....2005-Up .....1 .....
206999-5A.....Tube Sleeve, CFT30 Valve Body To Tube # 999-4 (1.770”Long)(Uses 2 O-Rings) 2005-Up .....1 .....
206999-6A.....Tube, CFT30 Valve Body To Bell (With T On Valve Body End & A Banjo Fitting On The Other
.....End) 2005-Up.....1 .....
206999-7A.....Oil Sleeve, CFT30 Valve Body To Case (.663”Long)(.705”OD)(.515”ID) (Uses 2 O-Rings)
.....2005-Up .....2 .....
206999-8A.....Oil Sleeve, CFT30 Pump Housing To Bell (.625”Long)(.675”OD)(.515”ID)(Uses 2 O-Rings)
.....2005-Up .....1 .....
206999-9A.....Oil Sleeve, CFT30 Valve Body To Case (.580”Long)(.705”OD)(.515”ID) (Uses 2 O-Rings)
.....2005-Up .....1 .....

© Whatever It Takes Transmission Parts. Inc.

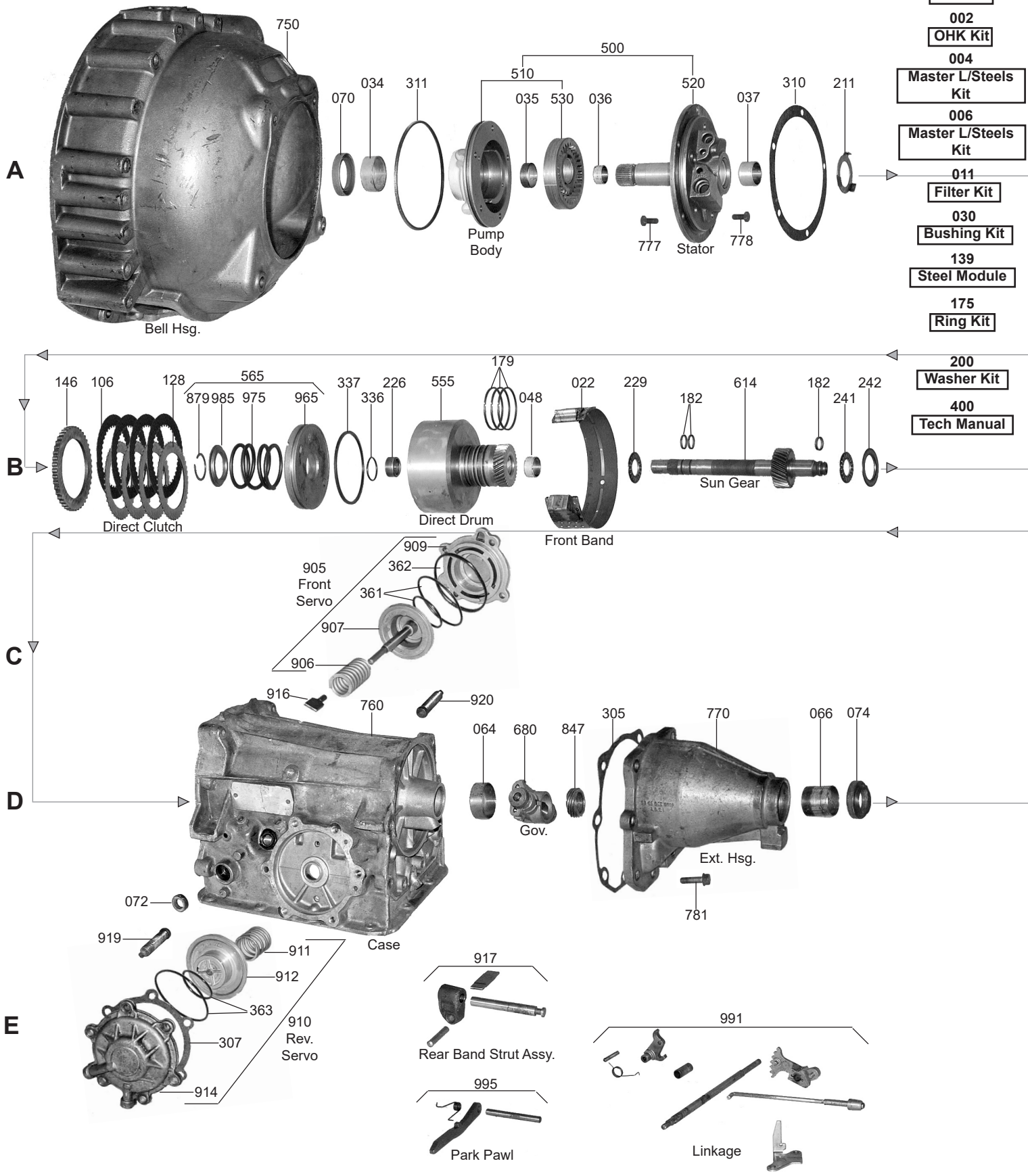

000 P&R Kit

002 OHK Kit

004 Master L/Steels Kit

006 Master L/Steels Kit

011 Filter Kit

030 Bushing Kit

139 Steel Module

175 Ring Kit

200 Washer Kit

400 Tech Manual

BORG WARNER

© Whatever It Takes Transmission Parts. Inc.

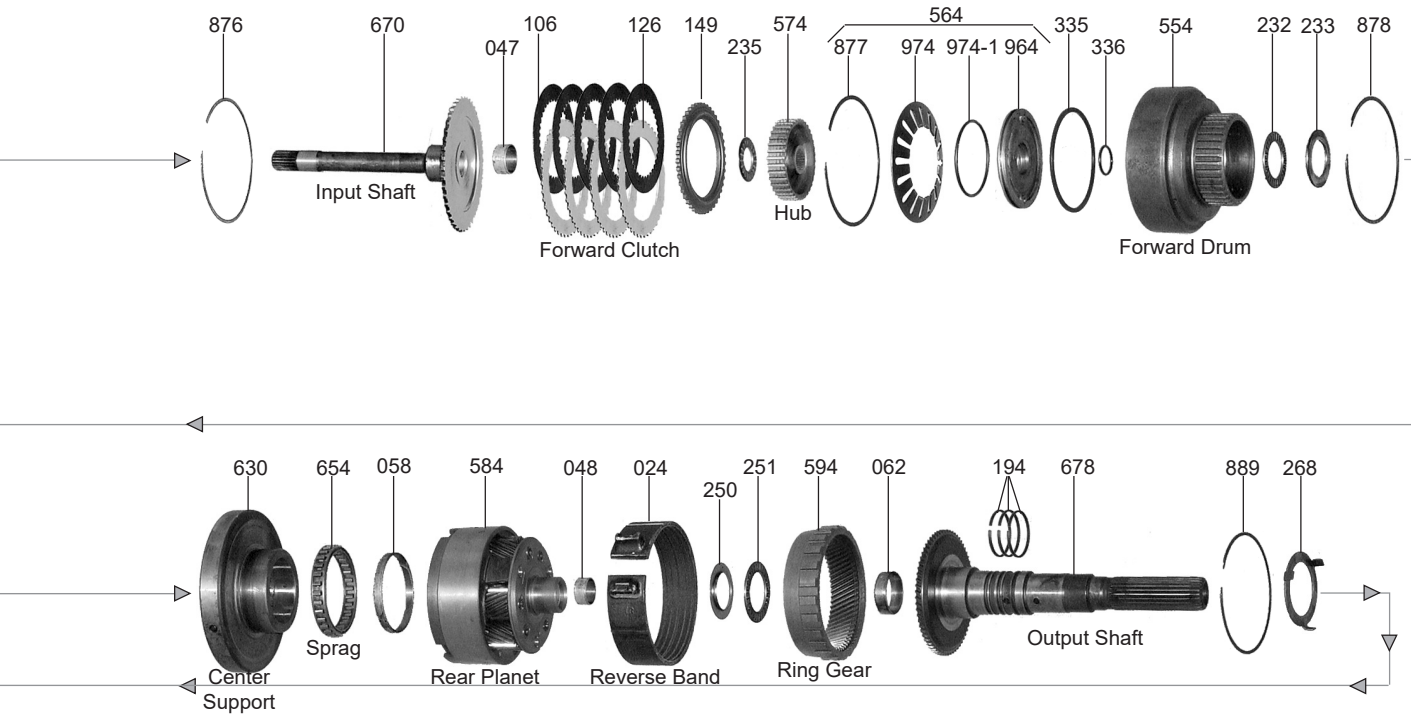

BORG WARNER

© Whatever It Takes Transmission Parts. Inc.

PART #	PAPER & RUBBER KIT	QTY.	REFERENCE #
29000	Paper & Rubber Kit, T-65/T-66 1971-Up	1	

PART #	OVERHAUL KITS	QTY.	REFERENCE #
29002	Overhaul Kit, T-65/T-66 1971-Up	1	

PART #	MASTER L/STEEL KIT	QTY.	REFERENCE #
29004	Master L/Steels Kit, T-65/T-66 1971-Up	1	

PART #	MASTER W/STEEL KIT	QTY.	REFERENCE #
29006	Master W/Steels Kit, T-65/T-66 1971-Up	1	

PART #	FILTER	QTY.	REFERENCE #
119010A	Filter, T-65/T-66 1971-Up	1	3188896

PART #	FILTER KIT	QTY.	REFERENCE #
29011	Filter Kit, T-65/T-66 1971-Up	1	

PART #	BANDS	QTY.	REFERENCE #
119022	Band, T-65/T-66 Front (Flex)	1	
119024	Band, T-65/T-66 Rear	1	

PART #	BUSHINGS	QTY.	REFERENCE #
119030	Bushing Kit, T-65/T-66	1	
119034	Bushing, T-65/T-66 Pump Body	1	
119035	Bushing, T-65/T-66 Inner Pump Gear	1	
119036	Bushing, T-65 Stator (Front) 23 Spline Input Shaft	1	
119036A	Bushing, T-65 Stator (Front) 26 Spline Input Shaft	1	
119037	Bushing, T-65/T-66 Stator (Rear)	1	
119047	Bushing, T-65/T-66 Input Shaft	1	
119048	Bushing, T-65/T-66 Sun Gear & Planet (Rear)	2	
119058	Bushing, T-65/T-66 Planet (Front, Large)	1	
119062	Bushing, T-65/T-66 Output Shaft	1	
119064	Bushing, T-65/T-66 Case	1	
119066	Bushing, T-65/T-66 Extension Housing (1.510”OD)(1.380”ID)(1.210” Long)(Babbit)	1	

PART #	METAL CLAD SEALS	QTY.	REFERENCE #
119070	Seal, T-65/T-66 Front (Except BMW)	1	3183886
29070	Seal, T-65/T-66 Front (BMW) 1973-Up	1	046-504-4001
29072	Seal, T-65/T-66 Linkage	1	
29074	Seal, T-65/T-66 Rear (Jaguar, Range Rover) (36 x 49.5 x 11mm)	1	
69074	Seal, T-65/T-66 Rear (BMW)	1	
29078	Seal, T-65/T-66 Speed-O Shaft	1	

PART #	FRICTION CLUTCH	QTY.	REFERENCE #
119106	Friction, T-65/T-66 Front & Rear Clutch (.061”) 1971-Up	8-10	

PART #	STEEL CLUTCH	QTY.	REFERENCE #
119126	Steel, T-65/T-66 Forward Clutch (.068”) Flat	3-4	3164873
119128	Steel, T-65/T-66 Direct Clutch (.068”) (Dished)	4-5	3164863
119128X	Steel, T-65/T-66 Direct Clutch (.090”) (Dished) Oversized	AR	
119139	Steel Module, T-65/T-66	1	

PART #	CLUTCH PRESSURE PLATES	QTY.	REFERENCE #
29146	Pressure Plate, T-65/T-66 Direct Clutch (Top)	1	
29149	Pressure Plate, T-65/T-66 Forward Clutch (Bottom)	1	

© Whatever It Takes Transmission Parts. Inc.

PART #	OIL SEALING RINGS	QTY.	REFERENCE #
119175	Ring Kit, T-65/T-66 1971-Up	1	

PART #	WASHERS & BEARINGS	QTY.	REFERENCE #
29200	Washer Kit, T-65/T-66	1	
29211	Washer, T-65/T-66 Stator To Input Shaft	1	
29226	Bearing, T-65/T-66 Direct Drum (Inner)	1	
29229	Bearing, T-65/T-66 Direct Drum To Sun Gear	1	
29232	Washer, T-65/T-66 Forward Drum To Direct Drum (Bronze)	1	
29233	Washer, T-65/T-66 Forward Drum To Direct Drum (Steel)	1	
29235	Washer, T-65/T-66 Input Shaft To Forward Clutch Hub	1	3165043
29241	Bearing, T-65/T-66 Sun Gear To Planet	1	
29242	Race, T-65/T-66 Sun Gear To Planet (W/3 Flat Sides)	1	
29250	Race, T-65/T-66 Planet To Output Shaft	1	
29251	Bearing, T-65/T-66 Planet To Output Shaft	1	
29268	Washer, T-65/T-66 Output Shaft To Case	1	

PART #	GASKETS & RUBBER COMPONENTS	QTY.	REFERENCE #
29300	Gasket, T-65/T-66 Pan (Cork)	1	04650-45008V
29310	Gasket, T-65/T-66 Pump	1	

PART #	TECHNICAL MANUALS	QTY.	REFERENCE #
29400	Technical Manual, T-65/T-66 Jaguar	1	83-BW6566
29401	Technical Manual On CD, BW65/66	1	

PART #	HARD PARTS	QTY.	REFERENCE #
29500	Pump, T-65 (Jaguar)With 23 Spline Input Shaft	1	
29500A	Pump, T-66 (Jaguar)With 26 Spline Input Shaft	1	
29500B	Pump, T-65 (BMW)	1	
29510	Pump Body W/Gears, T-65/T-66	1	
29520	Stator, T-65 (Jaguar) With 23 Spline Input Shaft	1	
29520A	Stator, T-66 (Jaguar) With 26 Spline Input Shaft	1	
29520B	Stator, T-65 (BMW)	1	
29554	Drum, T-65/T-66 Forward Clutch	1	
29554B	Drum, T-65 (BMW) Forward Clutch	1	
29555	Drum, T-65/T-66 Direct Clutch W/Sun Gear	1	
29564	Piston Kit, T-65/T-66 Forward Clutch	1	
29565	Piston Kit, T-65/T-66 Direct Clutch	1	
29574	Clutch Hub, T-65/T-66 Forward C;utch	1	
29584	Planet, T-65/T-66 (Jaguar) Race # 242 Has 3 Flat Sides (For Planet W/Round Race Use 119584A)	1	
29594	Ring Gear, T-65/T-66 Planet	1	
29614	Sun Gear, T-65/T-66 (Jaguar)	1	
29630	Center Support, T-65/T-66	1	

PART #	SPRAGS & ONE WAY CLUTCHES	QTY.	REFERENCE #
29654	Sprag, T-65/T-66	1	
29665	Outer Race, T-65/T-66 Inside Planet	1	

PART #	HARD PARTS (Continued)	QTY.	REFERENCE #
29670	Input Shaft, T-65/T-66 23 Spline (Jaguar)	1	
29670A	Input Shaft, T-65/T-66 26 Spline (Jaguar)	1	
29678	Output Shaft, T-65/T-66 (25 Spline) (8 15/16” Long) Jaguar	1	
29678B	Output Shaft, T-65/T-66 (25 Spline) (9 15/16” Long) Jaguar	1	
29680	Governor, T-65/T-66	1	
29740	Valve Body, T-65/T-66 (Jaguar)	1	
29750	Bell Housing, T-65/T-66 (Jaguar)	1	
29760	Case, T-65/T-66 (Jaguar)	1	
29770	Extention Housing, T-65/T-66 (Jaguar)	1	
29798	Nut, T-65/T-66 Holds Yoke To Output Shaft (Jaguar)	1	
29841	Yoke, T-65/T-66 Output Shaft (Jaguar)	1	
29847	Gear, T-65/T-66 Speed-O Drive	1	
29876	Snap Ring, T-65/T-66 Holds Input Sahft To Forward Drum	1	

© Whatever It Takes Transmission Parts. Inc.

PART #	HARD PARTS (Continued)	QTY.	REFERENCE #
29877	Snap Ring, T-65/T-66 Holds Return Spring In Forward Drum	1	
29878	Snap Ring, T-65/T-66 Holds Direct Clutch Pressure Plate In	1	
29879	Snap Ring, T-65/T-66 Holds Direct Clutch Retainer In	1	
29889	Snap Ring, T-65/T-66 Holds Output Shaft To Ring Gear	1	
29905	Servo Assembly, T-65/T-66 Front (Jaguar)	1	
29906	Spring, T-65/T-66 Front Servo (Jaguar)	1	
29907	Piston, T-65/T-66 Front Servo (Jaguar)	1	
29909	Cover, T-65/T-66 Front Servo (Jaguar)	1	
29910	Servo Assembly, T-65/T-66 Rear (Jaguar)	1	
29911	Spring, T-65/T-66 Rear Servo (Jaguar)	1	
29914	Cover, T-65/T-66 Rear Servo (Jaguar)	1	
29916	Strut, T-65/T-66 Front Band	1	
29917	Strut Assembly, T-65/T-66 Rear Band	1	
29919	Strut, T-65/T-66 Rear Band Apply	1	
29920	Bolt, T-65/T-66 Rear Band Adjusting	1	
29964	Piston, T-65/T-66 Forward Clutch (Jaguar)	1	
29965	Piston, T-65/T-66 Direct Clutch	1	
29974	Spring, T-65/T-66 Forward Clutch Disc Spring (.075”)	1	4486217
29975	Spring, T-65/T-66 Direct Clutch Return	1	
29985	Retainer, T-65/T-66 Direct Clutch Spring	1	
29991	Linkage Assembly, T-65/T-66 Internal (Jaguar)	1	
29995	Park Pawl Assembly, T-65/T-66 (Jaguar)	1	
29999	Oil Tube, T-65/T-66 Governor Feed (Jaguar)	1	
29999A	Oil Tube Set, T-65/T-66 (Jaguar)	1	

© Whatever It Takes Transmission Parts. Inc.

Resistor Values

If you can read the bands on a ceramic resistor, you can determine its resistance value and its tolerance:

- The first two bands indicate the first two digits of its resistance value.
- The third band indicates the number of zeros to add.
- The fourth band indicates the tolerance.

Resistance Values

Color	1st Band	2nd Band	3rd Band	4th Band
Black	0	0	0	—
Brown	1	1	1	—
Red	2	2	2	—
Orange	3	3	3	—
Yellow	4	4	4	—
Green	5	5	5	—
Blue	6	6	6	—
Violet	7	7	7	—
Gray	8	8	8	—
White	9	9	—	—
Brown	—	—	—	1%
Gold	—	—	—	5%
Silver	—	—	—	10%
Plain	—	—	—	20%

Brown 1%

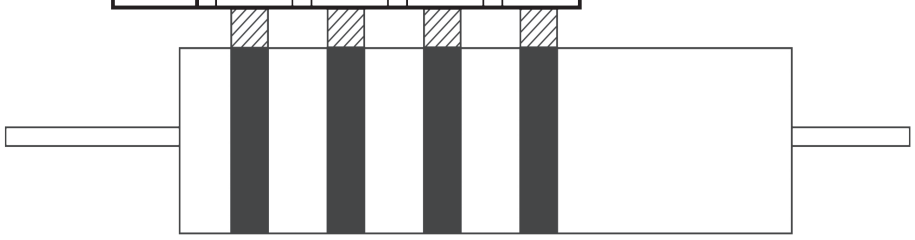

So if the bands are:					The resistor value is:
Blue 6	Green 5	Yellow 0,000	Silver ±10%	=	650 kΩ, ±10%
Red 2	Violet 7	Brown 0	Gold ±5%	=	270 Ω, ±5%
White 9	Orange 3	Violet 0,000,000	Plain ±20%	=	930 MΩ, ±20%

© 2006 ATRA. All Rights Reserved.

PART #	PAPER & RUBBER KIT	QTY.	REFERENCE #
119000	Paper & Rubber Kit, T-35 Type 2 American 1962-71	1	
119000A	Paper & Rubber Kit, T-35 Type 1 Foreign 1963-76	1	

PART #	OVERHAUL KITS	QTY.	REFERENCE #
119002	Overhaul Kit, T-35 Type 2 American 1962-71	1	
119002A	Overhaul Kit, T-35 Type 1 Foreign 1963-76	1	
119002AB	Overhaul Kit, T-35/T40 (Austrailian) 1965-92	1	

PART #	MASTER L/STEEL KIT	QTY.	REFERENCE #
119004	Master L/Steels Kit, T-35 Type 2 American 1962-71	1	
119004A	Master L/Steels Kit, T-35 Type 1 Foreign 1963-76	1	

PART #	MASTER W/STEEL KIT	QTY.	REFERENCE #
119006	Master W/Steels Kit, T-35 Type 2 American 1962-71	1	
119006A	Master W/Steels Kit, T-35 Type 1 Foreign 1963-76		

PART #	FILTER	QTY.	REFERENCE #
119010	Filter, T-35 American (Front) 1962-66	1	3179973
119010A	Filter, T-35 American (Front) 1967-71	1	3188896
119010AC	Filter, T-35 Foreign (Front) W/Out Scoop 1963-76	1	
119010B	Filter, T-35 American (Rear) 1962-66	1	

PART #	FILTER KIT	QTY.	REFERENCE #
119011	Filter Kit, T-35 American 1962-66	1	
119010A	Filter Kit, T-35 American (W/Shroud) 1961-71	1	
119010AC	Filter Kit, T-35 Foreign (Front) W/Out Scoop	1	

PART #	BANDS	QTY.	REFERENCE #
119022	Band, T-35 Front (Flex) 1962-Up	1	
119022A	Band, T-35 Front (Solid) (1 17/32" Wide) 1962-67	1	
119022B	Band, T-35 Front (Solid) (1 27/32" Wide) 1967-69	1	
119024	Band, T-35 Rear	1	

PART #	BUSHINGS	QTY.	REFERENCE #
119030	Bushing Kit, T-35	1	
119034	Bushing, T-35 Pump Body	1	3205306
119035	Bushing, T-35 Inner Pump	1	3205308
119036	Bushing, T-35 Stator (Front) 22/23 Spline Input Shaft	1	3205309
119036A	Bushing, T-35 Stator (Front) 26 Spline Input Shaft	1	
119037	Bushing, T-35 Stator (Rear)	1	3205307
119047	Bushing, T-35 Input Shaft	1	3205301
119048	Bushing, T-35 Forward Drum With Sun Gear & Planet (Rear)	2	
119058	Bushing, T-35 Planet Sprag Race	1	3205304
119062	Bushing, T-35 Output Shaft	1	3205305
119064	Bushing, T-35 Case	1	3203639
119066	Bushing, T-35 Extension Housing (1.510"OD)(1.380"ID)(1.210" Long)(Babbit)	1	
119066C	Bushing, T-35 Extension Housing (1.800"OD) (Closed Drive Shaft Type)	1	

PART #	METAL CLAD SEALS	QTY.	REFERENCE #
119070	Seal, T-35 Front (Except BMW) 1962-Up	1	3183886
119072	Seal, T-35 Manual Lever	1	
119074	Seal, T-35 Rear (2"OD) 1963-Up	1	235728-3
119074A	Seal, T-35 Rear (1 3/4"OD) 1963-Up	1	

PART #	FRICTION CLUTCH	QTY.	REFERENCE #
119106	Friction, T-35 Front & Rear Clutch (.061") 1962-Up	8-10	

© Whatever It Takes Transmission Parts. Inc.

PART #	STEEL CLUTCH	QTY.	REFERENCE #
119126	Steel, T-35 Forward Clutch (.068") (Flat) 1962-Up	3-4	3164873
119128	Steel, T-35 Direct Clutch (.068") (Dished) 1962-Up	4-5	3164863
119128X	Steel, T-35 Direct Clutch (.090") Oversize	AR	
119139	Steel Module, T-35	1	

PART #	MODULATORS	QTY.	REFERENCE #
119160	Modulator, T-35 Screw In	1	

PART #	OIL SEALING RINGS	QTY.	REFERENCE #
119175	Ring Kit, T-35 1971-Up	1	

PART #	GASKETS & RUBBER COMPONENTS	QTY.	REFERENCE #
119300	Gasket, T-35 Bottom Pan (Foreign)	1	211E7A191
119300A	Gasket, T-35 Bottom Pan (American)	1	
119310	Gasket, T-35 Front Pump	1	3164869
119311	O-Ring, T-35 Front Pump	1	3165004
119334	O-Ring, T-35 Forward Clutch Drum (Inner) Foreign 1962-Up	1	
119334A	O-Ring, T-35 Forward Clutch Drum (Inner) American 1969-72	1	
119335	O-Ring, T-35 Direct Clutch (Inner) Foreign 1962-Up	1	
119336	Lip Seal, T-35 Direct Clutch (Inner) Foreign 1962-Up	1	3165050
119336B	Lip Seal, T-35 Direct Clutch (Inner) American 1969-72	1	13305
119337	Lip Seal, T-35 Direct Clutch (Outer) 1962-Up	1	
44371A	O-Ring, T-35 Filler Tube	1	

PART #	HARD PARTS	QTY.	REFERENCE #
119500A	Pump, T-35	1	
119510	Pump Body, T-35 With Gears 1962-Up	1	
119554	Drum, T-35 Forward Clutch (.800"ID Bore W/Out Oil Groove) 1962-66	1	
119554A	Drum, T-35 Forward Clutch (.800"ID Bore With Oil Groove) 1967-69	1	
119554B	Drum, T-35 Forward Clutch (.930"ID) 1970-Up	1	
119555	Drum, T-35 Direct Clutch With Sun Gear (.850"ID Bushing) 1962-66 (1 3/4" Wide Band Surface)	1	
119555A	Drum, T-35 Direct Clutch With Sun Gear (.850"ID Bushing) 1967-69 (2" Wide Band Surface)	1	
119555B	Drum, T-35 Direct Clutch With Sun Gear (1.00"ID Bushing) 1970-Up	1	
119584	Planet, T-35 (1.850"OD Sun Gear On Shaft) 1962-66 (No ID Groove Next To Band Surface)	1	
119584A	Planet, T-35 (1.950"OD Sun Gear On Shaft) 1966-Up (With 1 Groove Next To Band Surface) Race # 242 Is Round	1	
119654	Sprag, T-35 Planet	1	3164843
119670A	Input Shaft, T35 (23 Splines)	1	
119760A	Case, T-35 (Air Cooled) Uses A Rear Pump 1962-66	1	
S29741D-6K	End Plug Kit, T-35 Modulator Valve (Plug & O-Ring) In Valve Body (Sonnax)	1	
119912	Piston, T-35 Rear Servo	1	
119964A	Piston, T-35 Front Clutch 1962-E69	1	
119964B	Piston, T-35 Front Clutch 1962-E69, L69-72	1	

© Whatever It Takes Transmission Parts. Inc.

PART #	PAPER & RUBBER KIT	QTY.	REFERENCE #
104000	Paper & Rubber Kit, BW35TB Saab 1968-80	1	
104000A	Paper & Rubber Kit, BW37TB Saab 900 1981-92 & Saab 9000 1981-85	1	

PART #	OVERHAUL KITS	QTY.	REFERENCE #
104002	Overhaul Kit, BW35TB Saab 1968-80	1	
104002A	Overhaul Kit, BW37TB Saab 900 1981-92 & Saab 9000 1981-85	1	

PART #	MASTER L/STEEL KIT	QTY.	REFERENCE #
104004	Master L/Steels Kit, BW35TB Saab 1968-80	1	
104004A	Master L/Steels Kit, BW37TB Saab 900 1981-92 & Saab 9000 1981-85	1	

PART #	MASTER W/STEEL KIT	QTY.	REFERENCE #
104006	Master W/Steels Kit, BW35TB Saab 1968-80	1	
104006A	Master W/Steels Kit, BW37TB Saab 900 1981-92 & Saab 9000 1981-85	1	

PART #	FILTER	QTY.	REFERENCE #
104010	Filter, BW35TB 1968-80	1	9320052
104010A	Filter, BW37TB 1981-82	1	936449
104010B	Filter, BW37TB 1983-92	1	7544125

PART #	FILTER KIT	QTY.	REFERENCE #
104011	Filter Kit, BW35TB 1968-80	1	
104011A	Filter Kit, BW37TB 1981-82	1	
104011B	Filter Kit, BW37TB 1983-92	1	

PART #	BANDS	QTY.	REFERENCE #
119022	Band, BW35TB / BW37TB Front (Flex)	1	
119024	Band, BW35TB / BW37TB Rear	1	

PART #	BUSHINGS	QTY.	REFERENCE #
104030	Bushing Kit, BW35TB / BE37TB	1	
119034	Bushing, BW35TB / BW37TB Pump Body	1	
104047	Bushing, BW35TB / BW37TB Input Shaft	1	
119048	Bushing, BW35TB / BW37TB Direct Drum & Planet To Sun Gear (Rear)	2	
119058	Bushing, BW35TB / BW37TB Planet To Center Support (Front) (2.855”ID)	1	
119062	Bushing, BW35TB / BW37TB Output Shaft To Planet (1.260”ID)	1	

PART #	METAL CLAD SEALS	QTY.	REFERENCE #
104070	Seal, BW35TB / BW37TB Pump Body	1	
104075	Seal, BW37TB Pinion	1	
104076	Seal, BW35TB Axle (Both)	2	
67076A	Seal, BW37TB Axle (Left Side) 1981-Up	1	
104076B	Seal, BW37TB Axle (Right Side) 1981-Up	1	

PART #	FRICTION CLUTCH	QTY.	REFERENCE #
119106	Friction, BW35TB / BW37TB Forward & Direct Clutch (.061”)	8-9	
119119	Friction Module, BW35TB / BW37TB	1	

PART #	STEEL CLUTCH	QTY.	REFERENCE #
119126	Steel, BW35TB Saab Forward Clutch (.068”) Flat	3-4	3164873
119128	Steel, BW35TB Direct Clutch (.068”) Dished	4-5	3164863
119128X	Steel, BW35TB Direct Clutch (.090”) Oversize	1	
119139	Steel Module, BW35TB / BW37TB	1	

PART #	CLUTCH PRESSURE PLATES	QTY.	REFERENCE #
104146	Pressure Plate, BW35TB / BW37TB Direct Clutch (Top)	1	
104149	Pressure Plate, BW35TB / BW37TB Forward Clutch (Bottom)	1	

© Whatever It Takes Transmission Parts. Inc.

PART #	OIL SEALING RINGS	QTY.	REFERENCE #
119175	Ring Kit, BW35TB / BW37TB	1	

PART #	WASHERS & BEARINGS	QTY.	REFERENCE #
104210	Shim, BW35TB / BW37TB Front Plate	1	
104211	Washer, BW35TB / BW37TB Front Plate	1	
104229	Bearing, BW35TB / BW37TB Sun Gear Front & Rear	2	
104232	Washer, BW35TB Forward Drum To Direct Drum (Front)	1	
104232A	Bearing W/Race, BW37TB Forward Drum To Direct Drum	1	
104233	Washer, BW35TB Forward Drum To Direct Drum (Rear) Steel	1	
104233A	Race, BW37TB Forward Drum To Direct Drum (Front)	1	
104235	Washer, BW35TB / BW37TB Input Shaft	1	
104242	Washer, BW35TB / BW37TB Planet (Front)	1	
104250	Washer, BW35TB / BW37TB Planet (Rear)	1	
104251	Bearing, BW35TB / BW37TB Planet (Rear)	1	
104272	Washer, BW35TB / BW37TB Governor To Seal Cover	1	
104273	Cup Race, BW35TB / BW37TB Pinion Retainer (Front & Rear)	2	
104274	Bearing, BW35TB / BW37TB Pinion	2	
104276	Shim, BW35TB / BW37TB Pinion Shaft	1	
104279	Ball Bearing, BW35TB / BW37TB Turbine Shaft	1	
104280	Shim, BW35TB / BW37TB Driven Sprocket Bearing	1	
104281	Ball Bearing, BW35TB / BW37TB Driven Sprocket To Case	1	

PART #	GASKETS & RUBBER COMPONENTS	QTY.	REFERENCE #
104300	Gasket, BW35TB Bottom Pan (Rear) 1968-80	1	8708455
104300A	Gasket, BW37TB Bottom Pan (Rear) 1981-89	1	9335456
104300AB	Gasket, BW37TB Bottom Pan (Rear) 1990-92	1	4029450
104300B	Gasket, BW35TB Bottom Pan (Front) 1968-80	1	4027652
104300BA	Gasket, BW37TB Bottom Pan (Front) 1981-89	1	9335423
104300BB	Gasket, BW37TB Bottom Pan (Front) 1990-92	1	4029443
104301	Gasket, BW35TB / BW37TB Side Cover	1	
104302	Gasket, BW35TB / BW37TB Transmission Case To Engine	1	7514946
104303	Gasket, BW35TB / BW37TB Differential Cover	1	
104304	Gasket, BW35TB / BW37TB Chain Cover	1	
104311	O-Ring, BW35TB / BW37TB Pump	1	
104318	Gasket, BW35TB / BW37TB Bell Housing To Case	1	
44371A	O-Ring, BW35TB / BW37TB Filler Tube	1	6264902

PART #	TECHNICAL MANUALS	QTY.	REFERENCE #
104400	Technical Manual, BW35TB / BW37TB Saab	1	

PART #	HARD PARTS	QTY.	REFERENCE #
104500	Pump, BW35TB 1968-80	1	
104500A	Pump, BW37TB 1981-92	1	
104510	Pump Body W/Gears, BW35TB (Thin Gears) 1968-80	1	
104510A	Pump Body W/Gears, BW37TB (.750” Thick Gears) 1981-92	1	
104520	Stator, BW35TB Support 1968-80	1	
104520A	Stator, BW37TB Support 1981-92	1	

PART #	PUMP COMPONENTS	QTY.	REFERENCE #
104544	Plate, BW35TB Pump 1968-80	1	
104544A	Plate, BW37TB Pump 1981-92	1	

PART #	HARD PARTS (Continued)	QTY.	REFERENCE #
104554	Drum, BW35TB Forward Clutch (Washer Type) 1968-80	1	
104554A	Drum, BW37TB Forward Clutch (Bearing Type) 1981-92	1	
104555	Drum, BW35TB Fdirect Clutch (Washer Type) 1968-80	1	
104555A	Drum, BW37TB Direct Clutch (Bearing Type) 1981-92	1	
104564	Piston Kit, BW35TB / BNW37TB Forward Clutch	1	
104565	Piston Kit, BW35TB / BW37TB Direct Clutch	1	
104574	Clutch Hub, BW35TB / BW37TB Forward Clutch	1	
104584	Planet, BW35TB 1968-80	1	

© Whatever It Takes Transmission Parts. Inc.

PART #	HARD PARTS (Continued)	QTY.	REFERENCE #
104584A	Planet, BW37TB 1981-92	1	
104594	Ring Gear, BW35TB 1968-80	1	
104594A	Ring Gear, BW37TB 1981-92	1	
104614	Sun Gear, BW35TB 1968-80	1	
104614A	Sun Gear, BW37TB 1981-92	1	
104630	Center Support, BW35TB / BW37TB 1968-80	1	
104630A	Center Support, BW37TB 1985-92	1	
104636	Center Plate, BW35TB 1968-80	1	
104636A	Center Plate, BW37TB 1981-92	1	

PART #	SPRAGS & ONE WAY CLUTCHES	QTY.	REFERENCE #
104654	Sprag, BW35TB / BW37TB (Use 119654)	1	
119654	Sprag, BW35TB / BW37TB	1	

PART #	HARD PARTS (Continued)	QTY.	REFERENCE #
104670	Input Shaft, BW35TB (2 Ring) 1968-80	1	
104670A	Input Shaft, BW37TB (3 Ring) 1981-92	1	
104673	Turbine Shaft, BW35TB / BW37TB	1	
104678	Output Shaft, BW35TB (No Rings)	1	
104678A	Output Shaft, BW37TB (With 3 Rings)	1	
104680	Governor, BW35TB 1968-80	1	
104680A	Governor, BW37TB 1981-92	1	
104697	Cover, BW35TB Pinion Seal 1968-80	1	
104697A	Cover, BW37TB Pinion Seal 1981-92	1	
104700	Chain, BW35TB 1968-80	1	
104700A	Chain, BW37TB 1981-92	1	
104705	Sprocket, BW35TB / BW37TB Drive (40 Teeth)	1	
104705A	Sprocket, BW35TB / BW37TB Drive (39 Teeth)	1	
104706	Sprocket, BW35TB / BW37TB Drive (38 Teeth)	1	
104706A	Sprocket, BW35TB / BW37TB Drive (35 Teeth)	1	
104706B	Sprocket, BW35TB / BW37TB Drive (37 Teeth)	1	
104716	Differential Housing, BW35TB / BW37TB (Year Model) (Height)	1	
104720	Ring Gear, BW35TB / BW37TB (Year Model) (# Teeth)	1	
104730	Pinion, BW35TB / BW37TB (Year Model) (# Teeth)	1	
104735	Housing, BW35TB Pinion (Cast Iron) 1968-80	1	
104735A	Housing, BW37TB Pinion (Aluminum) 1981-92	1	
104740	Valve Body, BW35TB 1968-80	1	
104740A	Valve Body, BW37TB 1981-92	1	
104750	Bell Housing, BW35TB 1968-80	1	
104750A	Bell Housing, BW37TB 1981-84	1	
104750AA	Bell Housing, BW37TB 1985-92	1	
104755	Cover, BW35TB Sprocket 1968-80	1	
104755A	Cover, BW37TB Sprocket 1981-92	1	
104758	Cover, BW35TB Differential 1968-80	1	
104758A	Cover, BW37TB Differential 1981-92	1	
104760	Case, BW35TB / BW37TB (Year, Model, Cast #)	1	
104766	Cover, BW35TB / BW37TB Side	1	
104768	Pan, BW35TB / BW37TB Bottom	1	
104795	Nut, BW35TB / BW37TB Holds Drive Sprocket On	1	
104796	Nut, BW35TB / BW37TB Holds Driven Sprocket On	1	
104798	Nut, BW35TB / BW37TB Pinion	1	
104876	Snap Ring, BW35TB / BW37TB Holds Input Shaft To Forward Drum	1	
104877	Snap Ring, BW35TB / BW37TB Holds Forward Return Spring	1	
104879	Snap Ring, BW35TB / BW37TB Holds Direct Retainer In	1	
104889	Snap Ring, BW35TB / BW37TB Holds Output Shaft To Ring Gear	1	
104898	Snap Ring, BW35TB / BW37TB Holds Ball Bearing To Pump	1	
104899	Snap Ring, BW35TB / BW37TB Holds Bearing To Case	1	
104905	Servo Assembly, BW35TB / BW37TB Front	1	
104910	Servo Assembly, BW35TB / BW37TB Rear	1	
104925	Accumulator Assembly, BW35TB / BW37TB	1	
104964	Piston, BW35TB / BW37TB Forward Clutch	1	
104965	Piston, BW35TB / BW37TB Direct Clutch	1	
29974	Spring, BW35TB / BW37TB Forward Disc Spring (.075")	1	4486217
104975	Spring, BW35TB / BW37TB Direct Clutch Return	1	
104985	Retainer, BW35TB / BW37TB Direct Clutch	1	
104999	Oil Tube Set, BW35TB / BW37TB	1	

© Whatever It Takes Transmission Parts. Inc.

224 IMPORT

450-43LE

Self-Diagnostic Information

NPR, FUSO

There are only 13 components that will cause the “Check Trans” light to illuminate.

1. Vehicle Speed Sensor #1
2. Engine Speed Sensor
3. Transmission fluid sensor
4. Inhibitor Switch
5. Throttle Position Sensor
6. Vehicle Speed Sensor#2
7. SS#1
8. SS#2
9. Timing Solenoid
10. TCC Solenoid
11. EPC Solenoid
12. Exhaust Brake Solenoid
13. Engine Warming sensor

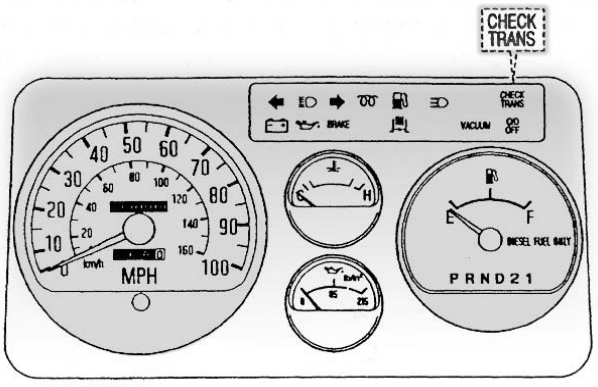

© 2004 ATRA. All Rights Reserved

450-43LE (Aisin Seiki)

RWD 4 Speed

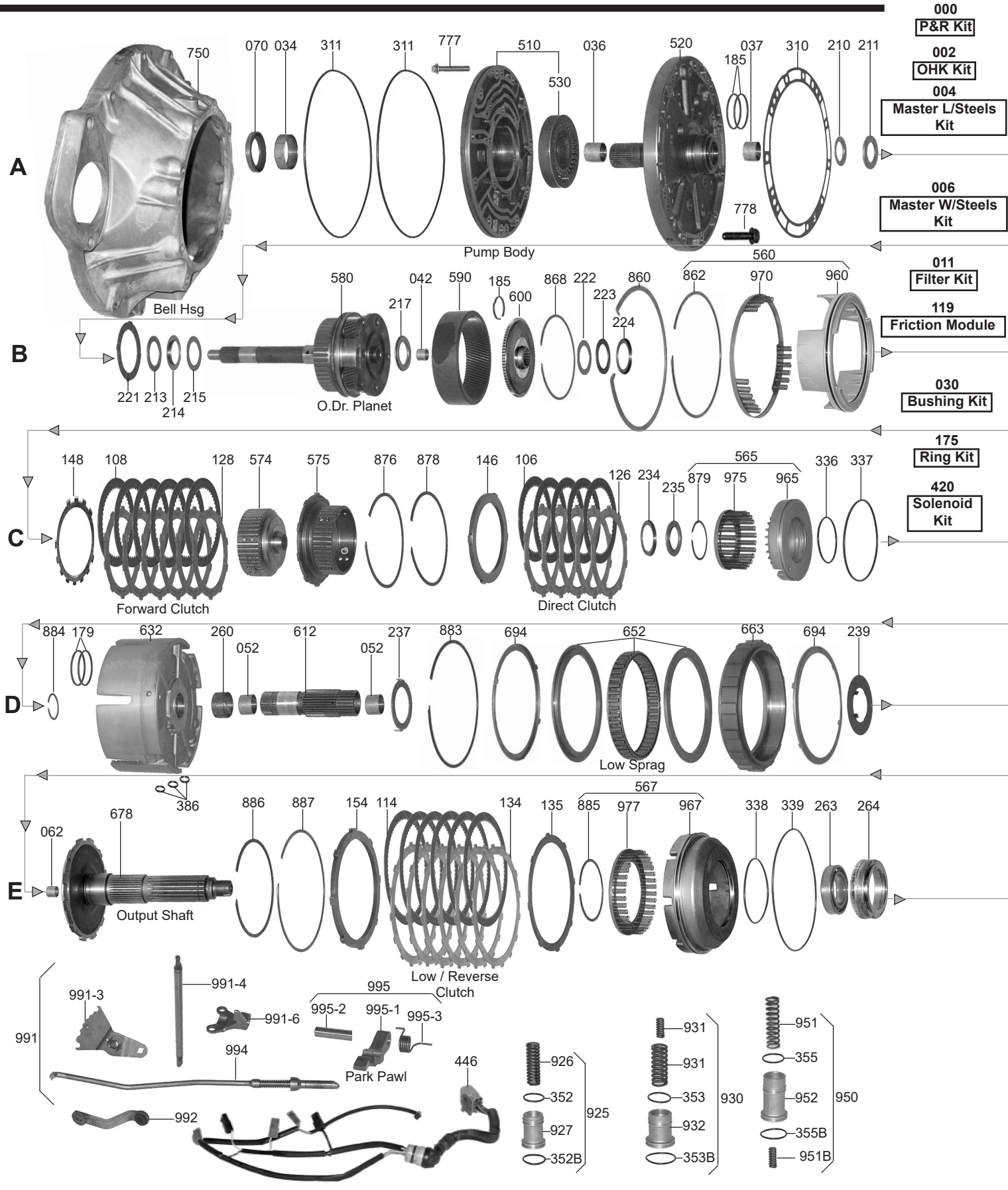

© Whatever It Takes Transmission Parts. Inc.

450-43LE (Aisin Seiki)

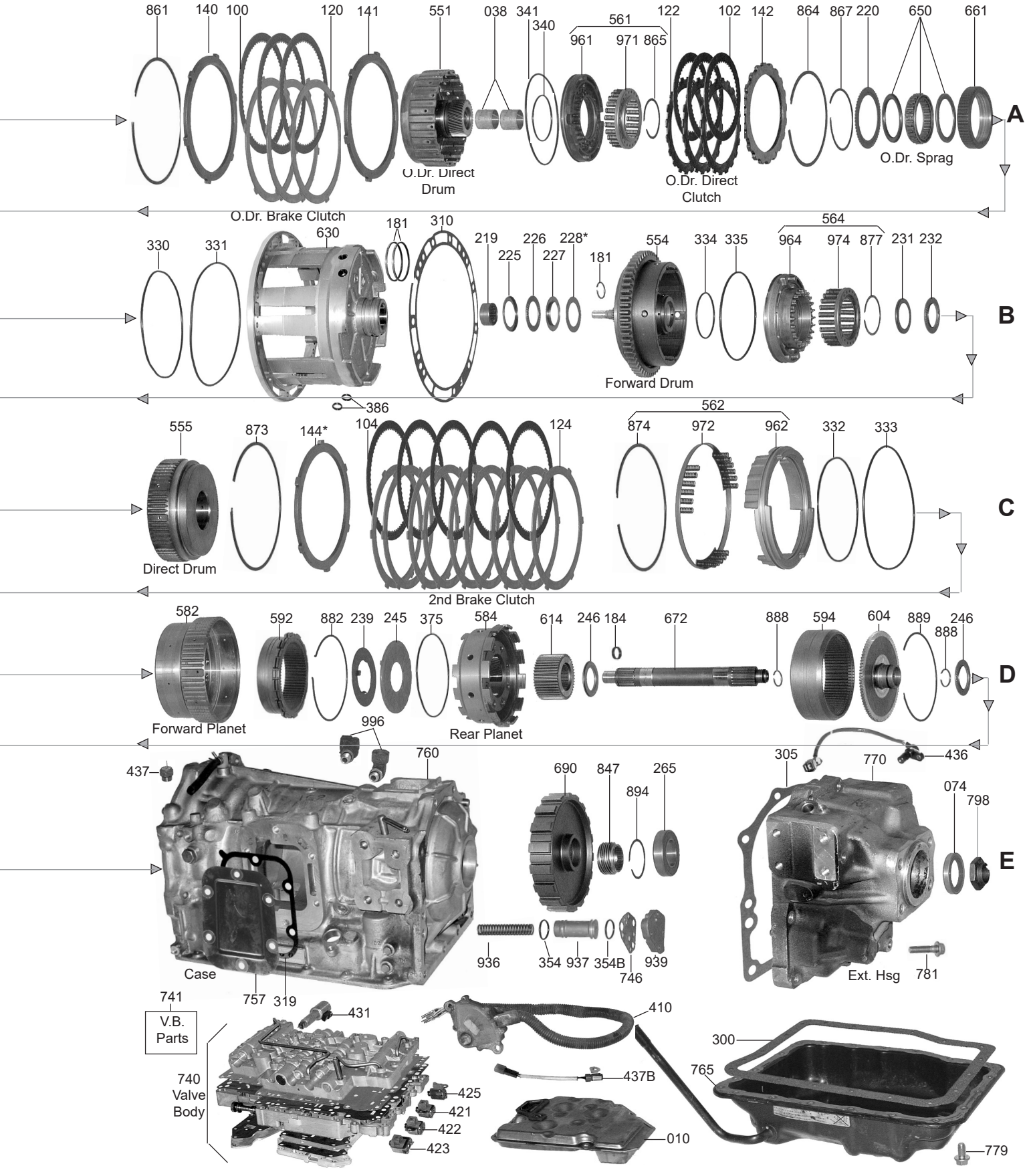

AISIN WARNER

1-800-940-0197

© Whatever It Takes Transmission Parts. Inc.

PART #	PAPER & RUBBER KIT	QTY.	REFERENCE #
141000E	Paper & Rubber Kit, A450-43LE 1998-Up	1	

PART #	OVERHAUL KITS	QTY.	REFERENCE #
141002E	Overhaul Kit, A450-43LE 1998-Up	1	

PART #	MASTER L/STEEL KIT	QTY.	REFERENCE #
141004E	Master L/Steels Kit, A450-43LE 1998-Up	1	

PART #	MASTER W/STEEL KIT	QTY.	REFERENCE #
141006E	Master W/Steels Kit, A450-43LE 1998-Up	1	

PART #	FILTER	QTY.	REFERENCE #
141010E	Filter, A450-43LE 1998-Up	1	

PART #	FILTER KIT	QTY.	REFERENCE #
141011E	Filter Kit, A450-43LE 1998-Up	1	

PART #	BUSHINGS	QTY.	REFERENCE #
141030E	Bushing Kit, A450-43LE (10 Bushings) 1998-Up	1	
141034A	Bushing, A450-43LE Pump Body 1998-Up	1	

PART #	METAL CLAD SEALS	QTY.	REFERENCE #
141070	Seal, A450-43LE Front Pump 1998-Up	1	8-97218-280-0
60072	Seal, A450-43LE Manual Lever Shaft 1998-Up	1	
141074E	Seal, A450-43LE Extension Housing 1998-Up	1	

PART #	FRICTION CLUTCH	QTY.	REFERENCE #
141100B	Friction, A450-43LE Overdrive Brake Clutch (.083")(20 Teeth) 1998-Up	3	
141102B	Friction, A450-43LE Overdrive Direct Clutch (.083") (47 Teeth) 1998-Up	3	
141104A	Friction, A450-43LE 2nd Brake Clutch (.083") (70 Teeth) 1998-Up (Use 141100A)	5	35633-36060
141100A	Friction, A450-43LE 2nd Brake Clutch (.083") (70 Teeth) 1998-Up	5	35633-36060
141106A	Friction, A450-43LE Direct Clutch (.083") (46 Teeth) 1998-Up (Use 141102A)	5	35633-60040
141108A	Friction, A450-43LE Forward Clutch (.083") (46 Teeth) 1998-Up (Use 141102A)	7	35633-60040
141102A	Friction, A450-43LE Forward Clutch (.083") (46 Teeth) 1998-Up (Also Fits Direct Clutch)	5-12	35633-60040
141114A	Friction, A450-43LE Low / Reverse (.067") (70 Teeth) 1998-Up	6	35633-60030
141119B	Friction Module, A450-43LE 1998-Up	1	

PART #	STEEL CLUTCH	QTY.	REFERENCE #
141120B	Steel, A450-43LE Overdrive Brake Clutch (.095") (6 Teeth) (6.400"ID) 1998-Up	2	
141122B	Steel, A450-43LE Overdrive Direct Clutch (.078") (20 Teeth) 1998-Up	3	
141124B	Steel, A450-43LE 2nd Brake Clutch (.110") (6 Teeth) 1998-UP	5	
141126B	Steel, A450-43LE Direct Clutch (.095") (10 Teeth) 1998-UP	5	
141128A	Steel, A450-43LE Forward Clutch (.071") (10 Teeth) 1998-Up (Use 141122A)	6	35634-36010
141122A	Steel, A450-43LE Forward Clutch (.071") (10 Teeth) 1998-Up	6	35634-36010
141128AA	Steel, A450-43LE Forward Clutch (.078") (10 Teeth) 1998-Up (Use 141122AA)	AR	35634-36040
141122AA	Steel, A450-43LE Forward Clutch (.078") (10 Teeth) 1998-Up	AR	35634-36040
141128AB	Steel, A450-43LE Forward Clutch (.087") (10 Teeth) 1998-Up (Use 141122AB)	AR	35634-36050
141122AB	Steel, A450-43LE Forward Clutch (.087") (10 Teeth) 1998-Up	AR	35634-36050
141134A	Steel, A450-43LE Low / Reverse Clutch (.071") (16 Teeth) 1998-Up	6	35632-36020
141134AA	Steel, A450-43LE Low / Reverse Clutch (.095") (16 Teeth) 1998-Up	6	35632-36030
141134B	Steel, A450-43LE Low / Reverse Clutch (.110") (16 Teeth) 1998-Up	6	
141135A	Cushion Steel, A450-43LE Low / Reverse Clutch (.100") (8 Teeth) 1998-Up	1	

PART #	CLUTCH PRESSURE PLATES	QTY.	REFERENCE #
141140B	Pressure Plate, A450-43LE Overdrive Brake Clutch (Top) (.195") (6 Teeth) 1998-Up	1	
141141B	Pressure Plate, A450-43LE Overdrive Brake Clutch (Bottom) (.158") (6 Teeth) 1998-Up	1	
141142B	Pressure Plate, A450-43LE Overdrive Direct Clutch (Top) (.192") (20 Teeth) 1998-UP	1	
141144A	Pressure Plate, A450-43LE 2nd Brake Clutch (Top) (.198") (6 Teeth) 1998-Up	1	

© Whatever It Takes Transmission Parts. Inc.

141146A	Pressure Plate, A440 Direct Clutch (Top)(4 Teeth)(#2)(.211"Thick)	1	
141146B	Pressure Plate, A450-43LE Direct Clutch (Top)(.186")(4 Teeth)(Cast # F)	1	
141146BA	Pressure Plate, A450-43LE Direct Clutch (Top)(.193")(4 Teeth)(Cast # A)	1	
141146BB	Pressure Plate, A450-43LE Direct Clutch (Top)(.203")(4 Teeth)(Cast # B)	1	
141148A	Wavy Steel, A450-43LE Forward Clutch (Bottom) (.078") (10 Teeth) 1998-Up	1	
141154A	Pressure Plate, A450-43LE Low / Reverse Clutch (Top) (.260") (8 Teeth) 1998-Up	1	
141154B	Pressure Plate, A450-43LE Low / Reverse Clutch (Top) (.276") (8 Teeth) 1998-Up	1	

PART #	OIL SEALING RINGS	QTY.	REFERENCE #
141175E	Ring Kit, A450-43LE 1998-Up	1	

PART #	WASHERS & BEARINGS	QTY.	REFERENCE #
141210A	Race, A450-43LE Stator To Overdrive Direct Drum (1.685"OD)(.025" Thick) 1998-Up	1	
141210AA	Race, A450-43LE Stator To Overdrive Direct Drum (1.685"OD)(.034" Thick) 1998-Up	1	
141210AB	Race, A450-43LE Stator To Overdrive Direct Drum (1.685"OD)(.049" Thick) 1998-Up	1	
141211A	Bearing, A450-43LE Stator To Overdrive Direct Drum (1.885"OD) 1998-Up	1	
141213B	Race, A450-43LE Overdrive Dierct Drum To Planet (Top Hat) (1.815"OD) 1998-Up	1	
141214B	Bearing, A450-43LE Overdrive Drum To Planet (1.810"OD) 1998-Up	1	
141215B	Race, A450-43LE Overdrive Drum To Planet (1.810"OD) (.031" Thick) 1998-Up	1	
141217B	Bearing W/Race, A450-43LE Overdrive Planet To Hub (1.642"OD) 1998-Up	1	
141219A	Caged Needle Bearing, A450-43LE Overdrive Support To Forward Drum Shaft (1.300"OD) 1998-Up	1	
141220A	Washer, A450-43LE Overdrive Sprag (57 Teeth) (.056") 1998-Up	1	
141221B	Washer, A450-43LE Overdrive Sprag Race To Planet (2 Tabs) (3 Wide Teeth) 1998-Up	1	
141222B	Race, A450-43LE Overdrive Hub To Support (2.295"OD) (.031" Thick) 1998-Up	1	
141223B	Bearing, A450-43LE Overdrive Hub To Support (2.295"OD) (.077" Thick) 1998-Up	1	
141224B	Cup Race, A450-43LE Overdrive Hub To Support (2.377"OD) (1.460"ID) 1998-Up	1	
141225A	Cup Race, A450-43LE Support To Forward Drum 1998-Up (Also Fits Forward Clutch Hub Front & Rear)	3	
141226A	Bearing, A450-43LE Support Toi Forward Drum (2.039"OD) (.077" Thick) 1998-Up	1	
141227A	Race, A450-43LE Support To Forward Drum (Top Hat) (1.970"OD) 1998-Up	1	
141228A	Shim, A450-43LE Support To Forward Drum (.039") 1998-Up	1	
141228AA	Shim, A450-43LE Support To Forward Drum (.049") 1998-Up	1	
141228AB	Shim, A450-43LE Support To Forward Drum (.059") 1998-Up	1	
141228AC	Shim, A450-43LE Support To Forward Drum (.069") 1998-Up	1	
141231A	Cup Race, A450-43LE Forward Drum To Forward Hub 1998-Up (Use 141225A)	1	
141232A	Bearing & Race, A450-43LE Forward Drum To Hub (2.038"OD) 1998-Up (Also Fits Hub To Direct Drum)	2	
141234A	Bearing & Race, A450-43LE Forward Hub To Direct Drum (2.038"OD) 1998-Up (Use 141232A)	1	
141235A	Cup Race, A450-43LE Forward Hub To Direct Drum 1998-Up (Use 141225A)	1	
141237A	Washer, A450-43LE Front Planet (Front) (.070" Thick) (2 Tab) 1998-Up	1	
141239A	Shim, A450-43LE 2nd Brake Support To Front Planet (4 Inner Tabs-Steel) 1998-Up	1	
141245B	Washer, A450-43LE Front To Rear Planet Plastic (4.238"OD) (4 Tab) 1998-Up	1	
141246A	Bearing & Race, A450-43LE Rear Sungear To Hub (2.084"OD) (.108" Thick) 1998-Up	1	
141260A	Caged Bearing, A450-43LE (1.300"OD) (.585" Thick) 1998-Up	1	
141263A	Ball Bearing, A450-43LE Case To Output Shaft (2.950"OD) (1.770"ID) 1998-Up	1	
141264A	Race, A450-43LE Presses In Case (3.165"OD) (.875" Thick) 1998-Up	1	
141265B	Ball Bearing, A450-43LE Extension Housing (1.416"ID) 1998-Up	1	

PART #	GASKETS & RUBBER COMPONENTS	QTY.	REFERENCE #
141300A	Pan Gasket, A450-43LE Bottom	1	
141310A	Gasket, A450-43LE Pump To Case 1985-Up	1	
142311A	O-Ring, A450-43LE Pump To Case 1998-Up	1	
141311EA	O-Ring, A450-43LE Bell Housing To Case 1998-05	1	
141375E	O-Ring, A450-43LE Rear Planet (Inner) 1998-Up	1	

PART #	ELECTRICAL COMPONENTS	QTY.	REFERENCE #
141410B	Switch, A450-43LE Neutral Safety (2 Bolt) 9 Wire (18 1/2" Wire Harness) 1998-Up	1	
141420EK	Solenoid Kit, A450-43LE (With 2 Shift, 1 Timing & 1 Lock-Up)	1	
141431E	Solenoid, A450-43LE EPC 1999-Up	1	
141436B	Sensor, A450-43LE Output Speed (1 Bolt, 2 Wires) (14" Harness) 1998-Up	1	
141437A	Sensor, A450-43LE Screw In (Brass) 18" Harness (1 Wire Type) (By Cooler Fittings) 1998-Up	1	
141437B	Sensor, A450-43LE TOT (6" Long 2 Blade Connector)(With 1 Bolt Bracket That Bolts To Bottom Of Valve Body) 1998-Up	1	

© Whatever It Takes Transmission Parts. Inc.

PART #	ELECTRICAL COMPONENTS (Continued)	QTY.	REFERENCE #
141446B	Wire Harness, A450-43LE Internal/External (8 Wire Connectors)(6 Connectors To Valve Body) 1998-Up	1	
141446BA	Wire Harness, A450-43LE Internal/External (8 Wire Brown Connectors)(6 Connectors To Valve Body) 2000-Up	1	

PART #	HARD PARTS	QTY.	REFERENCE #
141500E	Pump, A450-43LE (With 11 Teeth Inner Gear, .510” Thick) (11 Bolts To Case) 1998-Up	1	
141510E	Pump Body, A450-43LE (With 11 Teeth Inner Gear, .510” Thick) (11 Bolts To Case) 1998-Up	1	
141520E	Stator, A450-43LE (2.207” Diameter Ring Tower) 1998-Up	1	
141551E	Drum, A450-43LE Overdrive Direct Clutch (20 Teeth Steels) (Stamped Steel) (38 Teeth Sungear) 1998-Up	1	
141554E	Drum, A450-43LE Forward Clutch (58 Teeth PTO Gear) (.950” Diameter Splines) 1998-Up	1	
141555E	Drum, A450-43LE Direct Clutch (10 Teeth Steels) (1” Long Outer Splines) 1998-Up	1	
141560B	Piston Kit, A450-43LE Overdrive Brake Clutch (2.235” Thick) 1998-Up	1	
141561B	Piston Kit, A450-43LE Overdrive Direct Clutch (24 Springs) (2.550”ID) 1998-Up	1	
141562B	Piston Kit, A450-43LE 2nd Brake Clutch (1.400” Thick) (5.735”ID) 1998-Up	1	
141564A	Piston Kit, A450-43LE Forward Clutch (22 Spring Pockets) (4.985”OD) 1998-Up	1	
141565B	Piston Kit, A450-43LE Direct Clutch (.675” Thick) (22 Springs) (4.672”OD) 1998-Up	1	
141567B	Piston Kit, A450-43LE Low / Reverse Clutch (2 1/16” Thick x 6 7/8”OD Piston) 1998-Up	1	
141574B	Hub, A450-43LE Forward Clutch (21 Inner Splines) (2.098” Tall) 1998-Up	1	
141575A	Pressure Plate & Hub, A450-43LE Forward Clutch (Top) (10 Teeth) (42 Clutch Splines) 1998-Up	1	
141580E	Planet, A450-43LE Overdrive (38 Teeth Sun Gear) (47 Teeth Clutch Splines) 1998-Up	1	
141582E	Planet, A450-43LE Forward (Straight Cut Gears) (28 Holes In Sprag Race) 1998-Up	1	
141584E	Planet, A450-43LE Rear (Straight Cut Gears) (3.063” Thick) 1998-Up	1	
141590B	Ring Gear, A450-43LE Overdrive Planet (90 Teeth) (Right Angle Gears) (1.762” Wide) 1998-Up	1	
141592B	Ring Gear, A450-43LE Forward (1.406” Thick) (Straight Teeth) 1998-Up	1	
141594B	Ring Gear, A450-43LE Rear (Straight Teeth) (1.780” Thick) 1998-Up	1	
141600B	Hub, A450-43LE Overdrive Planet (90 Teeth) (20 Splines) 1998-Up	1	
141604B	Hub, A450-43LE Rear (21 Spline) (82 Straight Teeth On OD) 1998-Up	1	
141612B	Sun Gear, A450-43LE Forward (28 Straight Teeth) (5.660” Long) 1998-Up	1	
141614B	Sun Gear, A450-43LE Rear (45 Straight Teeth With 1 Groove) (1.391” Thick) 1998-Up	1	
141630E	Support, A450-43LE Overdrive Brake (6 1/8” Tall) (Aluminum) 1998-Up	1	
141632	Support, A450-43LE 2nd Brake (3 7/16” Tall) (Aluminum) 1998-Up	1	

PART #	SPRAGS & ONE WAY CLUTCHES	QTY.	REFERENCE #
141650A	Sprag, A450-43LE Overdrive Sprag (22 Elements) (.610” Wide) 1998-Up	1	
141652	Sprag, A450-43LE Low (46 Elements) (6 3/16”OD) (.808” Wide)(With Brass End Caps)	1	
141652K	Sprag Assembly, A450-43LE Low (46 Elements) 6 3/16”OD (.808” Wide Sprag) With 16 Lug Outer Race # 663 (With Brass End Caps)	1	

PART #	HARD PARTS (Continued)	QTY.	REFERENCE #
141661B	Outer Race, A450-43LE Overdrive Sprag (57 Teeth) (2.810”ID) 1998-Up	1	
141663A	Outer Race, A450-43LE Sprag (16 Lugs) (1.145” Thick) (6 1/8”OD)	1	
141672B	Input Shaft, A450-43LE (9 1/4” Long) 1998-Up	1	
141678B	Output Shaft, A450-43LE 2WD (8” Long) (.860”OD At Threaded End) 1998-Up	1	
141690B	Park Gear, A450-43LE (18 Lugs) (No Rings & No Governor) 1998-Up	1	
141694A	Retainer, A450-43LE Low Sprag (6 Tabs) (6 5/8”OD) 1998-Up	1	
141740E	Valve Body, A450-43LE (5 Soleniods) 1998-Up	1	

PART #	VALVE BODY COMPONENTS	QTY.	REFERENCE #
S141741EC-2	Sleeve, A450-43LE Cut Back (Superior)	1	
S141741ECK	Valve & Sleeve Assembly, A450-43LE Cutback Valve (Sonnax) (Contains: Sleeve, Spring, Valve, End Plug & Pin)	1	
S141741EDK	Boost Valve Kit, A450-43LE 1998-Up (Contains Boost Valve & Sleeve)	1	
S141741EOSK	Valve & SLeeve Assembly, A450-43LE Oversized Cutback Valve (Contains: Oversized Lockup Plunger Valve & Sleeve, Lockup Control Valve, Cutback Valve & Sleeve)(Sonnax) (Must Use T-F-94987-TL5)	1	
T-F-94987-TL5	Reamer Set, For S141741EOSK	1	
141746B	Plate, A450-43LE Accumulator (10 Holes) 1998-Up	1	

© Whatever It Takes Transmission Parts. Inc.

PART #	HARD PARTS (Continued)	QTY.	REFERENCE #
141750E	Bell Housing, A450-43LE (Open Starter Hole At 9:30) (2 Case Dowel Pins) 1998-Up	1	
141760E	Case, A450-43LE (With PTO Side Mounts) (17" Long) 1998-Up	1	
141765E	Pan, A450-43LE (20 Bolts) (Front Driver Side Filler Tube) 1998-Up	1	
141770E	Extension Housing, A450-43LE 2WD (6 1/2" Long) (8 Mounting Holes) (Aluminum) 1998-Up	1	
141776AK	Bolt Set, A450-43LE Bell To Case (8 Pieces) (15mm) 1998-Up	1	
141777AK	Bolt Set, A450-43LE Pump To Case (11 Pieces) (12mm) 1998-Up	1	
141778AK	Bolt Set, A450-43LE Body To stator (7 Pieces) (12mm) 1998-Up	1	
141779AK	Bolt Set, A450-43LE Pan (20 Pieces) (10mm) 1998-Up	1	
141781BK	Bolt Set, A450-43LE Extension Housing To Case (10 Pieces) 1998-Up	1	
141782BK	Bolt Set, A450-43LE Valve Body To Case (20 Pieces) 1998-Up	1	
141783AK	Bolt Set, A450-43LE 2nd Brake Support To Case (14mm) (1.085" Long) (3 Pieces) 1998-Up	1	
141798B	Nut, A450-43LE Output Shaft To Brake Drum 1998-Up	1	
141847B	Speed-O Gear, A450-43LE (5 Teeth) (20 Splines To Output Shaft) 1998-Up	1	
141860A	Snap Ring, A450-43LE Overdrive Brake Support To Case (8 9/16"OD) (.105" Thick) 1998-Up	1	
141861B	Snap Ring, A450-43LE Overdrive Brake Clutch (Top) (.078") (7 5/8"OD) (Also Fits # 862, 873, 874, 883 & 887)	1-6	
141862B	Snap Ring, A450-43LE Overdrive Brake Clutch Retainer (.078") (7 5/8"OD) (Use 141861B) 1998-Up	1	
141864A	Snap Ring, A450-43LE Overdrive Clutch Top (.068") (5 3/8"OD) 1998-Up	1	
141865B	Snap Ring, A450-43LE Overdrive Direct Clutch Piston Retainer (.039") (2.315"OD) (Use 141877A) 1998-Up	1	
141867A	Snap Ring, A450-43LE Overdrive Sprag (.058") (3 9/16"OD) 1998-Up	1	
141868B	Snap Ring, A450-43LE Overdrive Hub To Ring Gear (5.305"OD) 1998-Up	1	
141873B	Snap Ring, A450-43LE 2nd Brake Clutch (Top) (.078") (7 5/8"OD) (Use 141861B)	1	
141874B	Snap Ring, A450-43LE 2nd Brake Clutch Retainer (.078") (7 5/8"OD) (Use 141861B)	1	
141876A	Snap Ring, A450-43LE Forward Clutch (Top) (.068") (5 1/2"OD) (Also Fits Direct Clutch Top) 1998-Up	1-2	
141877A	Snap Ring, A450-43LE Forward Piston Retainer (.039") (2.315"OD) (Also Fits Overdrive Direct Clutch Retainer And Direct Clutch Retainer) 1998-Up	1-3	
141878B	Snap Ring, A450-43LE Direct Clutch (Top) (.068") (5 1/2"OD) (Use 141876B) 1998-Up	1	
141879B	Snap Ring, A450-43LE Direct Clutch Piston Retainer (.039") (2.315"OD) (Use 141877A) 1998-Up	1	
141882A	Snap Ring, A450-43LE Front Ring Gear (5"OD) (.070") (Bent Ends) 1998-Up	1	
141883B	Snap Ring, A450-43LE Low Sprag Retainer (.078") (7 5/8"OD) (Use 141861B) 1998-Up	1	
141884A	Snap Ring, A450-43LE 2nd Brake Support To Front Sun Gear (.057") (1.545"OD) 1998-Up	1	
141885A	Snap Ring, A450-43LE Low / Reverse Spring Retainer (.058") (3.741"OD) 1998-Up	1	
141886A	Snap Ring, A450-43LE Output Shaft To Planet (5 7/8"OD) (.067") 1998-Up	1	
141887B	Snap Ring, A450-43LE Low/Reverse Clutch (Top) (.078") (7 5/8"OD) (Use 141861B)	1	
141888A	Snap Ring, A450-43LE Holds Rear Ring Gear Hub To Input Shaft (1.078"OD) (.059") 1998-Up	1	
141889A	Snap Ring, A450-43LE Rear Hub To Ring Gear (5 1/8"OD) (.057") 1998-Up	1	
141894B	Snap Ring, A450-43LE Bearing To Extension Housing (3.075") (.063") 1998-Up	1	
141925B	Accumulator Assembly, A450-43LE B-0 Accumulator 1998-Up	1	
141930B	Accumulator Assembly, A450-43LE C-2 Accumulator 1998-Up	1	
141936B	Spring, A450-43LE C-1 Accumulator (3.655" Long) 1998-Up	1	
141937A	Piston, A450-43LE C-1 Accumulator (2.495" Long) 1998-Up	1	
141939B	Cover, A450-43LE C-1 Accumulator (4 Bolt) (Aluminum) 1998-Up	1	
141950B	Accumulator Assembly, A450-43LE B-2 Accumulator 1998-Up	1	
141960B	Piston, A450-43LE Overdrive Brake Clutch (2.235") 1998-Up	1	
141961B	Piston, A450-43LE Overdrive Direct Clutch (24 Springs) (2.550"ID) 1998-Up	1	
141962B	Piston, A450-43LE 2nd Brake (1.400" Thick) (5.735"ID) 1998-Up	1	
141964A	Piston, A450-43LE Forward Clutch (22 Spring Pockets) (4.985"OD) 1998-Up	1	
141965B	Piston, A450-43LE Direct Clutch (.675" Thick) (22 Springs) (4.672"OD) 1998-Up	1	
141967B	Piston, A450-43LE Low / Reverse Clutch (2 1/16" Thick) (6 7/8"OD) 1998-Up	1	
141970B	Spring Retainer, A450-43LE Overdrive Clutch (7 1/4"OD) 1998-Up	1	
141971B	Retainer, A450-43LE Overdrive Direct Clutch (24 Springs) (3.550"OD) 1998-Up	1	
141974A	Retainer, A450-43LE Forward Clutch (22 Spring) (3.332"OD) 1998-Up (Also Fits Direct Clutch Retainer)	1-2	
141975A	Retainer, A450-43LE Direct Clutch (22 Spring) (3.332"OD) 1998-Up (Use 141974A)	1	
141977A	Spring & Retainer, A450-43LE Low / Reverse (36 Springs-5"OD) (3 5/8"OD) 1998-Up	1	
141991B	Linkage Assembly, A450-43LE Internal 1998-Up	1	
141994B	Park Rod, A450-43LE (.393"OD) (17" Long) 1998-Up	1	
141995A	Park Pawl Assembly, A450-43LE (3 Pieces) 1998-Up	1	
141996BK	Fitting Set, A450-43LE Cooler Line 1998-Up	1	

© Whatever It Takes Transmission Parts. Inc.

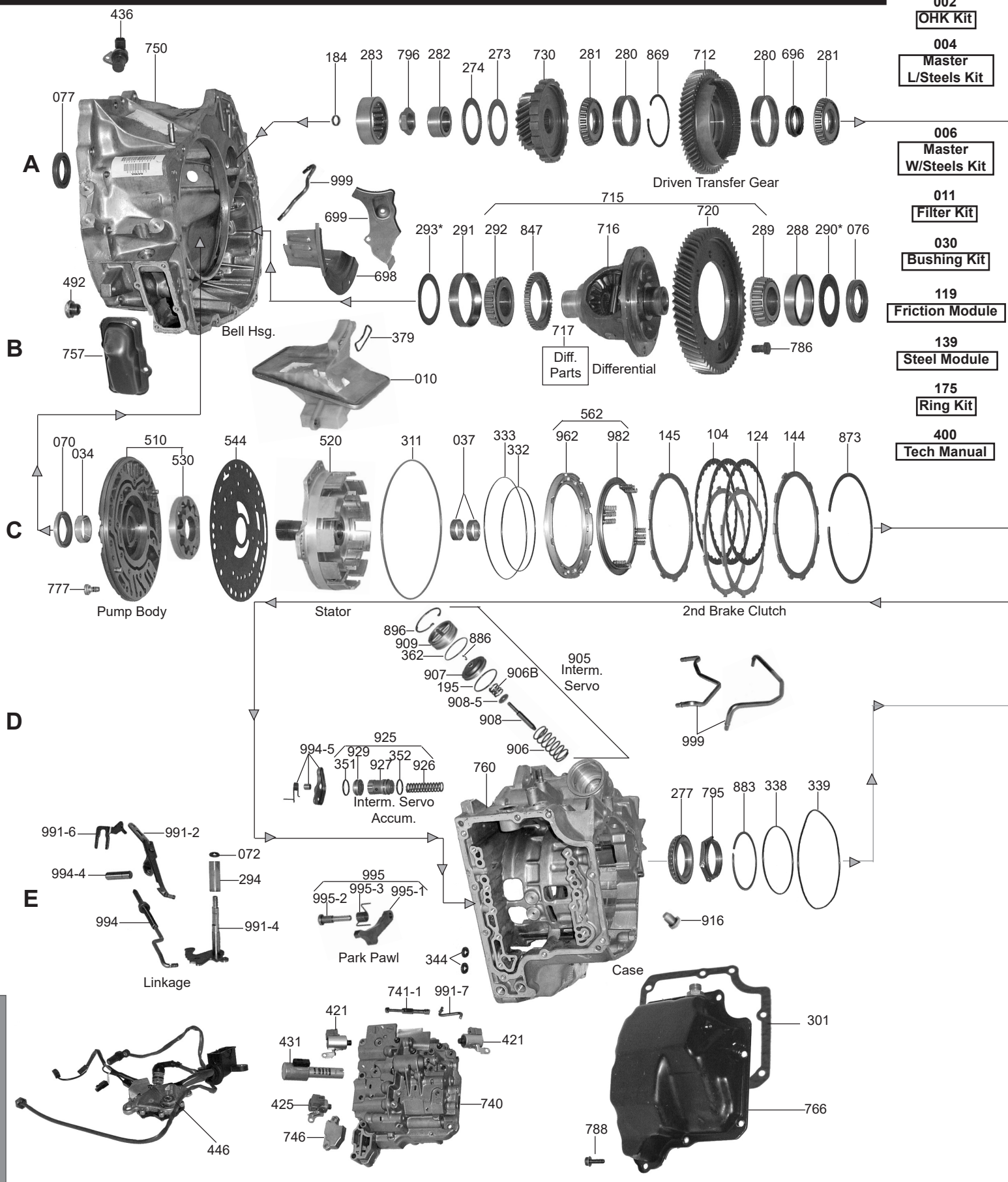

002 OHK Kit

004 Master L/Steels Kit

006 Master W/Steels Kit

011 Filter Kit

030 Bushing Kit

119 Friction Module

139 Steel Module

175 Ring Kit

400 Tech Manual

AISIN WARNER

© Whatever It Takes Transmission Parts. Inc.

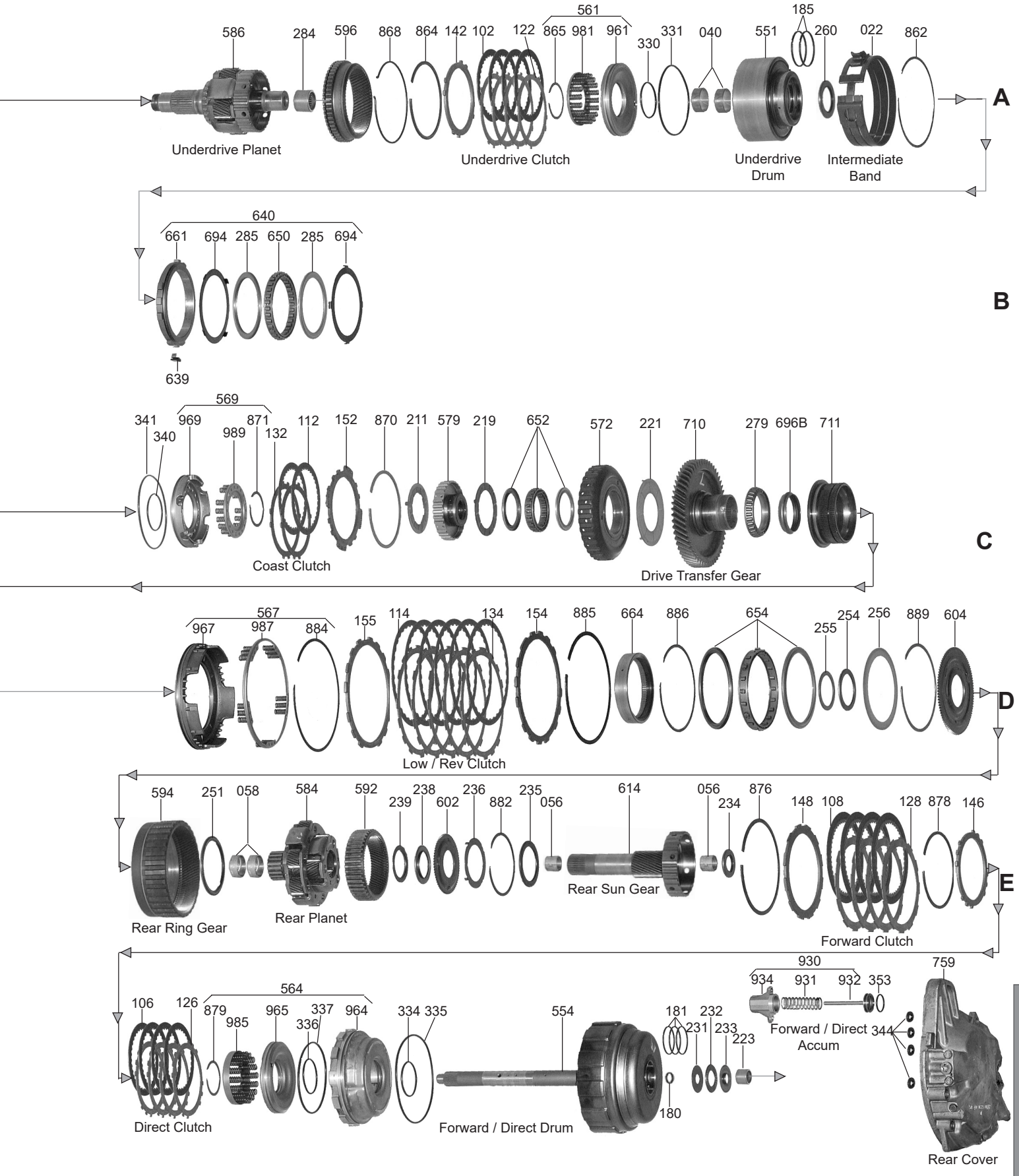

© Whatever It Takes Transmission Parts. Inc.

PART #	OVERHAUL KITS	QTY.	REFERENCE #
89002AF	Overhaul Kit, 50-40/50-42LE 1989-Up (Farpak)	1	

PART #	MASTER L/STEEL KIT	QTY.	REFERENCE #
89004AF	Master L/Steels Kit, 50-40/50-42LE 1989-98 (Farpak)	1	
89004AAF	Master L/Steels Kit, 50-40/50-42LE 1999-Up (Except 1999-Up LM Models)	1	

PART #	MASTER W/STEEL KIT	QTY.	REFERENCE #
89006A	Master W/Steels Kit, 50-40/50-42LE 1989-98 (Farpak)	1	
89006AAF	Master W/Steels Kit, 50-40/50-42LE 1999-Up (Except 1999-Up LM Models)	1	

PART #	FILTER	QTY.	REFERENCE #
89010A	Filter, 50-42LE (Volvo 850 & Saab) 1989-Up	1	90348726
89010AA	Filter, 50-42LE 1999-07 (Saab Only 1999-Up)	1	

PART #	FILTER KIT	QTY.	REFERENCE #
89011A	Filter Kit, 50-40/50-42LE (Except Saab 99-Up) 1989-Up	1	

PART #	BANDS	QTY.	REFERENCE #
89022A	Band, 50-40/50-42LE Intermediate (1.471” Wide) (5 5/16”OD) 1989-Up	1	5040735001U

PART #	BUSHINGS	QTY.	REFERENCE #
89030A	Bushing Kit, 50-40/50-42LE 1989-Up	1	
89058A	Bushing, 50-40/50-42LE Rear Planet (Front) No Groove (.495” Wide)(1.165”ID)	1	
89058B	Bushing, 50-40/50-42LE Rear Planet (Rear, With Groove)(.740” Wide)(1.165”ID)	1	

PART #	METAL CLAD SEALS	QTY.	REFERENCE #
57070A	Seal, 50-40/50-42LE Pump Body	1	
89070A	Seal, 50-40/50-42LE Pump Body 1989-Up	1	6843111-3
89072A	Seal, 50-40/50-42LE Manual Shaft 1989-Up	1	
84076	Seal, 50-43LE (Saab) Axle (Both Sides)(2.155”OD)	1	
89076A	Seal, 50-40/50-42LE Axle (Both Sides) 1.520”ID (2.483”OD)(Volvo) 1992-Up	2	6843112-1
89076AA	Seal, 50-42LE Axle (Both Sides) (Opel) 1989-Up	2	90342143
89077C	Seal, 50-42LE (Volvo AWD) Axle (Bell Housing Side)(4.020”OD)	1	

PART #	FRICTION CLUTCH	QTY.	REFERENCE #
89102A	Use (89106AA For 4.484”OD) Or (89112A For 4.260”OD)	4	
89104A	Friction, 50-40/50-42LE 2nd Brake Clutch (.067”) (33 Teeth) (6.302”OD) 1989-98 (Grooved Lining)	3-5	90348796
89104AA	Friction, 50-40/50-40LE 2nd Brake Clutch (.067”) (40 Teeth) (6.302”OD) 1999-Up	3-5	
89104AC	Friction, 50-42LE 2nd Brake Clutch (.075”)(40 Teeth) 1999-Up (Also Fits 50-42LE Low/Reverse Clutch #114)	3-5	
89106AA	Friction, 50-40/50-42LE Direct Clutch (.067”) (34 Teeth) (4.484”OD) 1994-Up (For Direct Clutch W/4.260”OD Use 89112A) (Also fits Underdrive Clutch 1999-Up)	4-8	
89108A	Friction, 50-40/50-42LE Forward Clutch (.067”) (46 Teeth) (5.374”OD) 1989-Up	4	90542936
89112A	Friction, 50-40/50-42LE Coast Clutch (.067”) 34 Teeth (4.260”OD) 1989-Up (Also Fits Underdrive and Direct Clutch 1989-98)	4-12	90542422
89114A	Friction, 50-40/50-42LE Low/Reverse Clutch (.067”) (33 Teeth) (6.302”OD) 1989-Up (Smooth Lining)	6	90348808
89119A	Friction Module, 50-40/50-42LE (With 33 Teeth 2nd Brake Friction) 1989-98	1	

PART #	STEEL CLUTCH	QTY.	REFERENCE #
89122A	Steel, 50-40/50-42LE Underdrive Clutch (.071”) (8 Teeth) (3.582”ID) 1989-98 (Use 89132A)	4	
89122AA	Steel, 50-40/50-42LE Underdrive Clutch (.098”) (18 Teeth) (3.582”ID) 1999-Up	4	
89122AC	Steel, 50-40/50-40LE Underdrive Clutch Bottom (.125”) (9 Teeth) (3.615”ID) 1989-Up	3	
89124A	Steel, 50-40/50-42LE 2nd Brake Clutch (.071”) (10 Teeth) (5.661”ID) 1989-98	2	
89124AA	Steel, 50-40/50-42LE 2nd Brake Clutch (.098”) (10 Teeth) (5.661”ID) 1989-98	2	90348795
89124AB	Steel, 50-40/50-42LE 2nd Brake Clutch (.098”) (10 Teeth) (5.538”ID) 1999-Up	2	
89124AC	Steel, 50-40/50-42LE 2nd Brake Clutch (.071”) (10 Teeth) (5.538”ID) 1999-Up	2	
89126A	Steel, 50-40/50-42LE Direct Clutch (.071”) (12 Teeth) (3.582”ID) 1989-98	4	90348774

© Whatever It Takes Transmission Parts. Inc.

89126AA.....Steel, 50-40/50-42LE Direct Clutch (.071") (18 Teeth) (3.582"ID) 1999-Up.....4 .....
89128A .....Steel, 50-40/50-42LE Forward Clutch (.071") (12 Teeth) (4.491"ID) 1989-Up 4 90348778
89128AA.....Steel, 50-40/50-42LE Forward Clutch (.077") (12 Teeth) (4.491"ID) 1989-Up (Use To
.....Adjust Clutch Pack).....AR.....
89132A .....Steel, 50-40/50-42LE Coast Clutch (.071") (8 Teeth) (3.582"ID) 1989-Up (Also Fits
.....Underdrive Clutch 1989-98).....4-7.....90348787
89134A .....Steel, 50-40/50-42LE Low/Reverse Clutch (.071") (15 Teeth) (5.661"ID) 1989-Up .....4-5.....90348807
89139A .....Steel Module, 50-40/50-42LE (With 5.661"ID 2nd Brake Steels) 1989-98 .....1 .....

PART #	CLUTCH PRESSURE PLATES	QTY.	REFERENCE #

89142.....Pressure Plate, 50-40LE Underdrive Clutch Top (18 Teeth) (.150") (3.582"ID) 1999-Up.....1 .....
89142A .....Pressure Plate, 50-42LE Underdrive Clutch (.150") 8 Teeth (3.582"ID) 1989-98 .....1 .....
89144.....Pressure Plate, 50-40LE 2nd Brake Top (.110" & .149" Stepped) (5.535"ID) (10 Teeth) 1999-Up .1 .....
89145A .....Pressure Plate, 50-42LE 2nd Brake Bottom (10 Teeth) (.142") (5.660"ID) 1989-98 .....1 .....
89146A .....Pressure Plate, 50-40/50-42LE Direct Clutch (.150") (12 Teeth) (3.580"ID) 1989-98 .....1 .....
89148A .....Pressure Plate, 50-40, 50-42LE Forward Clutch Top (12 Teeth) (.151") (4.490"ID)
..... (Stepped To .197") 1989-Up.....1 .....
89148AA.....Pressure Plate, 50-40/50-42LE Forward Clutch Top (12 Teeth) .150" (4.490"ID) .....1 .....
89152A .....Pressure Plate, 50-40/50-42LE Coast Clutch Top (.138") 12 Spring Guides (8 Teeth)
.....1989-Up .....1 .....
89155.....Pressure Plate, 50-40LE Low/Reverse Clutch Top & Bottom (15 Teeth)(.150")(5.660"ID)
.....(1 Wide Tooth) 1989-Up .....1-2.....
89155A .....Pressure Plate, 50-42LE Low/Reverse Clutch Bottom (15 Teeth) (.143") (5.660"ID)
..... (1 Wide Tooth) 1989-Up .....1 .....

PART #	OIL SEALING RINGS	QTY.	REFERENCE #

89175A .....Ring Kit, 50-40/50-42LE 1989-Up .....1 .....
89180AT .....Ring, 50-40/50-42LE Forward & Direct Drum Shaft (Small, Rear) Teflon (Butt Joint).....1 .....
89181A .....Ring, 50-40/50-42LE Forward & Direct Clutch (Metal).....3 .....

PART #	WASHERS & BEARINGS	QTY.	REFERENCE #

89211A.....Washer, 50-40/50-42LE Stator To Sprag (3 Tab Plastic) (2.919"OD) (1.847"ID) 1999-Up.....1 .....
89219A .....Washer, 50-40/50-42LE Coast Clutch Hub To 2nd Brake Hub (3 Tab Plastic) (.073" Thick)
..... (3.023"OD) (2.213"ID).....1 .....
89221A .....Washer, 50-42LE (3 Tab Plastic) .078" Thick (3.905"OD) (2.216"ID) 1999-Up .....1 .....
89223.....Bearing, 50-40LE Rear Cover (BKM131914J).....1 .....
89223A .....Bearing, 50-42LE Forward & Direct Drum To Rear Cover (KOYO 13BKM1715J).....1 .....
89231A .....Race, 50-40/50-42LE Forward & Direct Drum To Rear Cover (.031" Thick) (.536"ID)
..... (1.605"OD) .....1 .....
89232A .....Thrust Bearing, 50-42LE Forward & Direct Drum To Rear Cover (.077" Thick) (.910"ID)
..... (1.640"OD) .....1 .....
89233.....Race, 50-40LE Forward & Direct Drum To Rear Cover (.031" Thick) (.683"ID) (1.605"OD)
..... (.143" Thick At Lip) .....1 .....
89233A .....Race, 50-42LE Forward & Direct Drum To Rear Cover (.031" Thick) (.601"ID) (1.605"OD)
..... (.143" Thick At Lip) .....1 .....
89234.....Bearing W/Race, 50-40LE Rear Sun Gear To Drum (1.700"OD) (.870"ID) (.140" Thick) .....1 .....
89234A .....Bearing W/Races, 50-42LE Rear Sun Gear To Drum (1.645"OD) (.870"ID) (.140" Thick).....1 .....
89235.....Bearing W/Race, 50-40LE Rear Hub To Sun Gear (2.545"OD) (1.975"ID) (.110" Thick)
..... Will Retro.....1 .....
89235A .....Bearing W/Race, 50-42LE Rear Hub To Sun Gear (2.690"OD) (1.975"ID) (.109" Thick).....1 .....
89236A .....Race, 50-40/50-42LE Rear Hub To Sun Gear (4 Legs) (.031" Thick) (2.903"OD) (2.090"ID).....1 .....
89238A .....Bearing, 50-42LE Rear Planet To Hub (2.247"OD) (1.540"ID) .....1 .....
89239A .....Race, 50-42LE Rear Planet To Hub (2.120"OD) (1.545"ID).....1 .....
89251A .....Bearing, 50-40/50-42LE Rear Hub To Planet (3.493"OD) (1.40" Thick) (2.900"ID) .....1 .....
89254.....Bearing W/Races, 50-40LE Ring Gear Hub (Front) (2.275"OD) (1.732"ID) (.078" Thick
..... W/Lip) Will Retro With 89254A.....1 .....
89254A .....Bearing, 50-40/50-42LE Ring Gear To Hub Front (2.438"OD) (1.820"ID) (.108" Thick).....1 .....
89255A .....Race, 50-40/50-42LE Ring Gear Hub Front (2.275"OD) (1.732"ID) (.078" Thick) .....1 .....
89256A .....Washer, 50-40/50-42LE Plastic (.100" Thick Edge Stepped) (3.846"ID) (4.780"OD).....1 .....
89260.....Bearing W/Races, 50-40LE Underdrive Clutch Drum To Case (2.248"OD) (1.345"ID)
..... (.141" Thick) .....1 .....
89260A .....Bearing W/Races, 50-42LE Underdrive Drum To Case (2.248"OD) (1.435"ID) (.141" Thick).....1 .....
89273A .....Race, 50-40/50-42LE Pinion To Bell Bearing (2.788"OD) (1.943"ID) (.072" Thick).....1 .....
89274A .....Thrust Bearing, 50-42LE Pinion To Bell Bearing (2.785"OD) (1.933"ID) (.077" Thick).....1 .....
89277A .....Use 89279A.....1 .....
89279A .....Cone Bearing, 50-40/50-42LE Drive Transfer (30 Rollers) (2.085"ID) (.525" Thick)
.....(NSK R-53-2) Also Fits #277 & #279 .....1-3.....

© Whatever It Takes Transmission Parts. Inc.

PART #	WASHERS & BEARINGS (Continued)	QTY.	REFERENCE #
89280	Cup Race, 50-40LE Driven Transfer Gear (2.990"OD) (.470" Thick) (R37-2-NSK)	1	
89280A	Cup Race, 50-42LE Driven Transfer Gear (2.990"OD) (.510" Thick) (R37-4 NSK)	1	
89281	Cone Bearing, 50-40LE Driven Transfer Gear (26 Rollers) (1.450"ID) (R37-2 NSK) & Underdrive Planet	1-2	
89281A	Cone Bearing, 50-42LE Driven Transfer Gear (27 Rollers) (1.450"ID) (R37-4 NSK)	1	
89282A	Inner Race, 50-40/50-42LE Pinion Bearing To Bell (1.789"OD) (.805" Thick) (KOYO 06NU0722C3)	1	
89283A	Roller Bearing, 50-40/50-42LE Bell To Underdrive Planet (2.795"OD) (.865" Thick) (RNU090722) (16 Rollers)	1	
89284A	Caged Bearing, 50-42LE Underdrive Planet To Case (1.417"OD) (.900" Thick)	1	
89288A	Cup Race, 50-42LE Differential To Bell (3.388"OD) (.766" Thick) (ST4286-N KOYO)	1	
89289A	Cone Bearing, 50-42LE Differential (Ring Gear Side) 24 Rollers (1.650"ID) ST4286-N KOYO (.865" Thick Inner Race)	1	
89290A	Shim, 50-42LE Differential Differential To Case (3.363"OD) (1.770"OD) (.050" Thick)	1	
89291A	Cup Race, 50-40/50-42LE Differential To Bell (3.150"OD) (ST4280-N KOYO)	1	
89292A	Cone Bearing, 50-42LE Differential (Speed-o Side) 24 Rollers (1.650"ID) (ST428-N KOYO)	1	
89293A	Shim, 50-42LE Differential To Bell (2.280"ID) (.078" Thick) Selective	1	
89294A	Bearing, 50-40/50-42LE Linkage (.710"OD) (.915" Long) DC501204 NSK)	1	

PART #	GASKETS & RUBBER COMPONENTS	QTY.	REFERENCE #
89301A	Gasket, 50-40/50-42LE Side Pan 1989-Up	1	
67311B	O-Ring, AW50-42LE Pump	1	
21312A	Gasket, 50-40/50-42LE Valve Body Cover 1997-Up	1	

PART #	TECHNICAL MANUALS	QTY.	REFERENCE #
89400A	Technical Manual, 50-42LE	1	

PART #	ELECTRICAL COMPONENTS	QTY.	REFERENCE #
89410	Switch, 50-40LE Neutral Safety (2 Bolt) (10 Wire Connector)	1	
89421A	Solenoid, 50-40/42LE Shift (A & B Shift)	2	5040310002N
89425A	Solenoid, 50-40/42LE Lock-Up	1	5040313001L
89431A	Solenoid, 50-40/42LE EPC	1	
89446	Wire Harness, 50-40LE Internal (11 Wire Connector)	1	
89446A	Wire Harness, 50-40/50-42LE Internal (With 410 Switch) (17 Pin Connector)	1	

PART #	MISC. COMPONENTS	QTY.	REFERENCE #
89492A	Drain Plug, 50-40/50-42LE (Screen In) (.680" Long) (24 mm)	1	

PART #	HARD PARTS	QTY.	REFERENCE #
89510A	Pump Body, 50-40/50-42LE (.422" Thick Gears) (8 Bolt Cast Iron)	1	
89520A	Pump Stator, 50-40/50-42LE (Aluminum) With 11 Rear Lugs (14 Bolts To Body) (Cast 906D)	1	
89530A	Pump Gears, 50-40/50-42LE (.422" Thick)	1	
89544A	Pump Plate, 50-40/ 50-42LE (8 3/8"OD)	1	
89551	Drum, 50-40LE Underdrive Clutch (32 Teeth Sun Gear) (3 Clutch) (2.460"ID) 8 Holes (4.900"OD) 18 Teeth Steels	1	
89551A	Drum, 50-42LE Underdrive (32 Teeth Sun Gear) (4 Clutch) (2.460"ID) 8 Holes (4.900"OD) 8 Teeth Steels	1	
89554A	Drum, 50-40/50-42LE Forward & Direct Clutch (12 Teeth Steels) (11 1/4" Long Shaft W/26 Splines) On The Rear Cover Side Of The Drum Is A Laser Weld That Is 2 5/8" Diameter (Can Use 86554AAK)	1	
89554AA	Drum, 50-40/50-42LE Forward & Direct Clutch (12 Teeth Steels) (11 1/4" Long Shaft W/26 Splines) On The Rear Cover Side Of The Drum Is A Laser Weld That Is 3 1/4" Diameter	1	
89554AAK	Drum W/Piston Kit, 50-40/50-42LE Forward & Direct Clutch (12 Teeth Steels)(11 1/4" Long Shaft With 26 Splines)(On Rear Cover Side Of The Drum Is A Laser Weld That Is 3 1/4" Diameter)(Retro Fits 89554A)	1	
89554B	Drum, 50-40/50-42LE Forward & Direct Clutch (12 Teeth Steels) (11" Long Shaft)(20 Splines) (.846"OD Of Bushing Lands On Shaft)	1	
89554BA	Drum, 50-40/50-42LE Forward & Direct Clutch (12 Teeth Steels) (11" Long Shaft)(20 Splines) (.846"OD Of Bushing Lands On Shaft)(On The Rear Cover Side Of The Drum Is A Laser Weld That Is 2 5/8" Diameter)	1	
89554BB	Drum, 50-40/50-42LE Forward & Direct Clutch (12 Teeth Steels)(11" Long Shaft W/20 Splines) (.876"OD Of Bushing Lands On Shaft)(On The Rear Cover Side Of The Drum Is A Laser Weld That Is 3 1/4" Diameter)	1	

© Whatever It Takes Transmission Parts. Inc.

89554BBK ..... Drum W/Piston, 50-40/50-42LE Forward & Direct Clutch (12 Teeth Steels)(11" Long Shaft With 20 Splines)(.876"OD Of Bushing Lands On Shaft)(OnThe Rear Cover Side Of The Drum Is A Laser Weld That Is 3 1/4" Diameter)(Can Use This Kit For The 89554Ba & 89554BB Drum) 1
89561 ..... Piston Kit, 50-40LE Underdrive Clutch (Snap Ring .039") (Retainer 18 Springs 3.107"OD) (Piston 4.485"OD & 1.970"ID, .485" Thick Edge) 1
89561A ..... Piston Kit, 50-42LE Underdrive Clutch (Snap Ring .039") (Retainer 18 Springs 3.107"OD) (Piston 4.240"OD & 1.970"ID, .518" At Edge) 1
89562A ..... Piston Kit, 50-40/50-42LE 2nd Brake (Piston Is .500" Thick, 6 3/16"OD)(3 Clutch) 1989-Up 1
89562AA ..... Piston Kit, 50-40/50-42LE 2nd Brake (Piston Is .425" Thick, 5 13/16"OD)(4 Clutch) 1989-Up 1
89564A ..... Piston Kit, 50-40/50-42LE Forward & Direct Clutch (.040 x 2.030 Snap Ring) (16 Springs 3.125"OD Retainer) (#89965 Is 4.188"OD x 1.855"ID) (#89964 Is 12 Lugs 1.892"ID X 1.855" Thick) (Fits 89554A Drum) 1
89564AA ..... Piston Kit, 50-40/50-42LE Forward & Direct Clutch (.040 x 2.030" Snap Ring)(16 Springs, 3.125"OD Retainer)(#965 Is 4.188"OD x 1.855"ID)(#964 Is 12 Lugs, 1.892"ID x 1.855" Thick) (Fits 89554AA Drum) 1
89567A ..... Piston Kit, 50-40/50-42LE Low/Reverse (1.222" Thick x 6 1/4"OD Piston) (15 Spring Retainer) (Snap Ring is 1.775" Thick x 6 5/16"OD) 1
89569A ..... Piston Kit, 50-42LE Coast Clutch (.652" Thick Piston x 4 1/4"OD) (15 Spring Retainer 3 1/8"OD) (2.025" Snap Ring x .041" Thick) 1
89572A ..... Hub, 50-40/50-42LE (33 Teeth) (2.518"ID) 3 Holes Has Outer Sprag Race For ID) 1
89572B ..... Hub, 50-40LE (40 Teeth) (2.518"ID Slots Cut In Teeth) 1
89579A ..... Hub, 50-40/50-42LE With Inner Race (30 Teeth) (1.863"OD Race) 2 Sets Inner Splines (3 Holes) 1
89584A ..... Planet, 50-40/50-42LE Rear (9 Gear Steel) (19 Teeth Gears) 1
89586 ..... Planet, 50-42LE Underdrive (7 5/8" Long Shaft) 1
89586A ..... Planet, 50-42LE Underdrive (4 Gear) (8 1/4" Long) 16 Teeth Right Angle Gears (28 Clutch Teeth) 1
89586B ..... Planet, 50-40LE Underdrive (4 Gear) (7 3/4" Long) 16 Teeth Right Angle Gears (28 Clutch Teeth) 1
89592A ..... Ring Gear, 50-40/50-42LE Rear Planet (69 Teeth Right Angle) (1.083" Thick) 46 Lugs 1
89594A ..... Ring Gear, 50-40/50-42LE Rear (99 Teeth) (2.085" Thick) 33 Lugs 1
89596 ..... Ring Gear, 50-40LE Underdrive Planet (63 Teeth Left Angle) (1.075" Thick) 1
89596A ..... Ring Gear, 50-42LE Underdrive Planet (63 Teeth Left Angle) (1.235" Thick) 1
89602 ..... Rear Hub, 50-40LE (69 Teeth) (1.615"ID) 4 Holes (Machined Steel) Will Retro With 89602A 1
89602A ..... Rear Hub, 50-42LE Rear Planet (69 Teeth) (1.615"ID) 4 Holes (Stamped Steel) 1
89604A ..... Ring Gear Hub, 50-40/50-42LE (99 Teeth) (4.740"ID) 1
89614 ..... Sun Gear, 50-40LE With 28 Teeth Clutch Hub (27 Teeth Gear) (6 3/4" Long) (#234 Bearing Seat Is 1.715"OD) 1
89614A ..... Sun Gear, 50-42LE Rear (With 28 Teeth Clutch Hub) (27 Teeth Gear) (6 3/4" Long) (#234 Bearing Seat Is 1.675"OD) 1

PART #	SPRAGS & ONE WAY CLUTCHES	QTY.	REFERENCE #
89640A	Sprag Assembly, 50-42LE (32 Lugs)	1	
89650A	Sprag Element, 50-42LE (32 Lugs) (.475" Thick)	1	
89652	Sprag, 50-40LE (18 Elements) (.525" Thick) (Can Use 97652)	1	
97652	One Way Clutch, 50-40LE 2nd Sprag	1	
89652A	Sprag, 50-42LE (22 Elements) (.525" Thick)	1	
89654A	Sprag, 50-40/50-42LE (20 Lugs) (.525" Thick)	1	

PART #	HARD PARTS (Continued)	QTY.	REFERENCE #
89661A	Outer Race, 50-42LE In Case (11 Lugs) (3.915"ID)	1	
89664A	Inner Race, 50-40/50-42LE Sprag (4.075"OD) (.755" Thick) 4 Holes	1	
89694A	Retainer, 50-42LE Sprag (4 Legs) (.024" Thick) (3.600"ID)	1	
89696A	Crush Sleeve, 50-40/50-42LE Driven Transfer Gear (1.490"ID) (1.835"OD)	1	
89696B	Crush Sleeve, 50-40/50-42LE Drive Transfer Bearings (2.108"ID) (.480" Thick)	1	
89698	Oil Deflector, 50-40LE Differential (3 Bolt Tin) (6 Oil Slots)	1	
89698A	Oil Deflector, 50-42LE Differential (1/2" x 1" Notch On Small End) Will Work For 50-40LE	1	
89699A	Oil Deflector, 50-40/50-42LE Differential (2 Bolt With Elbow Finger) Bolts In Case	1	
89710A	Gear, 50-42LE Transfer (57 Teeth) (1 Groove) (6 1/4"OD)	1	
89710B	Gear, 50-40LE Drive Transfer (65 Teeth) (2 Groove) Right Angle	1	
89711A	Sleeve, 50-40/50-42LE Drive Transfer Bearings Retainer (3.928"OD) (1.551" Thick)	1	
89712A	Gear, 50-42LE Driven Transfer (56 Teeth) Left Angle (1.928" Thick)	1	
89712B	Gear, 50-40LE Driven Transfer (65 Teeth) Left Angle (2 Grooves)	1	
89712C	Gear, 50-40LE Driven Transfer (69 Teeth) Left Angle (2 Grooves)	1	
89716	Differential Housing, 50-40LE (Plastic Speed-O Tube) 8 Bolt (5.215" Long Thru Center)	1	
89716A	Differential Housing, 50-42LE (Electric Pick-Up Type) (6.050" Long Thru Center)	1	
89716B	Differential Housing, 50-42LE (No Speed-O) (1.090" Axle Bore) (6 1/16" Tall)(Uses A 12 Bolt Ring Gear)	1	

© Whatever It Takes Transmission Parts. Inc.

PART #	HARD PARTS (Continued)	QTY.	REFERENCE #
89716BA	Differential Housing, 50-42LE (48 Teeth Reluctor) (1.090” Axle Bore) (6 1/16” Tall)	1	
89716D	Differential Housing, 50-40LE (26 Teeth Plastic Speed-O) (1.070” Axle Bore) (5 5/16” Tall)	1	
89716E	Differential Housing, 50-42LE (No Speed-O) AWD (Uses 4 Short Cross Pins) 27 Roller Bearing On Housing Side, 24 Roller Bearing On Ring Gear Side)	1	
89720A	Ring Gear, 50-42LE (63 Teeth) (No Groove)	1	
89720B	Ring Gear, 50-42LE (6 Teeth) (6 Groove)	1	
89720D	Ring Gear, 50-4LE (69 Teeth) (3 Groove)	1	
89730A	Pinion, 50-42LE (23 Teeth) (No Groove)	1	
89730AK	Ring & Pinion, 50-42LE (63 Teeth, No Groove) (23 Teeth, No Groove)	1	
89730B	Pinion, 50-42LE (24 Teeth) (No Groove)	1	
89730BK	Ring & Pinion, 50-42LE (61 Teeth, 6 Groove) (24 Teeth, No Groove)	1	
89730BB	Pinion, 50-42LE (24 Teeth) (2 Groove)	1	
89730BBK	Ring & Pinion, 50-42LE (61 Teeth, 6 Groove) (24 Teeth, 2 Groove)	1	
89730BE	Pinion, 50-42LE (24 Teeth, 5 Groove)	1	
89730BEK	Ring & Pinion, 50-42LE (61 Teeth, 6 Groove) (24 Teeth, 5 Groove)	1	
89730D	Pinion, 50-40LE (26 Teeth) (3 Groove)	1	
89730DK	Ring & Pinion, 50-40LE (69 Teeth, 3 Groove) (26 Teeth, 3 Groove)	1	
89740A	Valve Body, 50-42LE (Volvo) With 4 Solenoids (Cast # 9150) The Top 2 Solenoids (S1 & S2 #421) Connectors Plug-In From The Left Side Of Each Solenoid	1	
89740AA	Valve Body, 50-42LE (Volvo) With 4 Solenoids (Cast # 9150) The Top 2 Solenoids (S1 & S2 #421) Connector On The Left Solenoid Plug-In From The Right Side And The Connector On The Right Solenoid Plug-In From The Left Side)	1	

PART #	VALVE BODY PARTS	QTY.	REFERENCE #
S89741CK	Valve & Sleeve Kit, 50-40/50-42LE Lock-Up Control Plunger Valve (Sonnax)	1	
S89741RK	Valve & Sleeve Kit, 50-40/50-42LE Main Boost Valve (Sonnax)	1	

PART #	HARD PARTS (Continued)	QTY.	REFERENCE #
89746A	Cover, 50-40/50-42LE Valve Body (2 Bolt) (Aluminum)	1	
89750A	Bell Housing, 50-42LE (Top Bolts 4 7/8”) Starter At 2:00 (Speed Sensor By Differential Seal) Cast # 50 40 212 002G (2.470”OD Axle Seal)	1	
89750B	Bell Housing, 50-40LE (Saab) (Top Bolts 4 7/8”) Starter At 10:00 (No Speed Sensor)	1	
89750BA	Bell Housing, 50-40LE (4 7/8” Top Bolts) Starter At 10:00 (2 1/8”OD Axle Seal) (Cast # On Top 50A044)	1	
89757A	Side Cover, 50-40/50-42LE Bell Housing (4 Bolt) (Tin)	1	
89759	Rear Cover, 50-40LE (Cast # 35143-50-A010) With Steel Ring Tower (Bearing #223 Has 13 Needles)	1	
89759A	Rear Cover, 50-42LE (Cast # 50 40 039 017R) With Aluminum Ring Tower (Bearing #223 Has 16 Needles) (Use 89759CA Per ATRA)	1	
89759B	Rear Cover, 50-40LE (Cast # 50 40 039 004 Y)	1	
89759C	Rear Cover, 50-42LE (Cast # 35143-50A030) With Steel Ring Tower (Bearing #223 Has 13 Needles)	1	
89759CA	Rear Cover, 50-42LE (Cast # 35143-50A030) With Steel Ring Tower (Bearing #223 Has 16 Needles)	1	
89760A	Case, 50-42LE (Cast # 50 40 065 002R) (2 1/2”OD Axle Seal) Black Tag	1	
89760AA	Case, 50-42LE (No Cast #)(Uses 1 Pulse Generator)(No Mounting Bosses By Differential Seal)(Black Tag)	1	
89760AB	Case, 50-42LE (Cast # 9152 Below Seal)(Uses 2 Pulse Generators)(With 3 Mounting Bosses By Differential Seal)	1	
89760B	Case, 50-40LE Saab (Ink # 50-40LE On Tag) (Cast # 35141-50A010)	1	
89760BA	Case, 50-40LE (Cast # 35141 50A011) (2 1/8”OD Axle Seal) Purple Tag	1	
89766	Cover, 50-40LE Valve Body (9 Bolt) Aluminum	1	
89766A	Cover, 50-42LE Valve Body (9 Bolt) Tin	1	
89776AK	Bolt Set, 50-40/50-42LE Case To Bell (15 Pieces)	1	
89777AK	Bolt Set, 50-40/50-42LE Pump To Case (1 7/16” Long x 12mm) (8 Pieces)	1	
89778AK	Bolt Set, 50-40/50-42LE Stator To Body (13 3/4” Long x 1 13/16” Long) (14 Pieces) Torx	1	
89780AK	Bolt Set, 50-40/50-42LE Rear Cover (9 Pieces)	1	
89782AK	Bolt Set, 50-40/50-42LE Valve Body To Case (10mm) (9 Pieces)	1	
89788AK	Bolt Set, 50-40LE Side Cover (9 Pieces)	1	
89795A	Nut, 50-40/50-42LE Drive Transfer (2.375” At Flats) Right Hand Threads (2.00”ID)	1	
89796A	Nut, 50-40/50-42LE Pinion To Underdrive Planet (1.420” At Flats) (.970”ID)	1	
89847	Speed-O Gear, 50-40LE (26 Teeth) Plastic	1	
89847A	Pick-Up, 50-42LE Electric For Speed-O (48 Teeth)	1	
89862A	Snap Ring, 50-42LE Sprag Race (.038” Thick) (5 3/8”OD)	1	
89864A	Snap Ring, 50-40/50-42LE Underdrive Clutch Top (.077” Thick) (4 9/16”OD)	1	
89865A	Snap Ring, 50-40/50-42LE Underdrive Retainer (.039” Thick) (2.130”OD)	1	

© Whatever It Takes Transmission Parts. Inc.

89868A ..... Snap Ring, 50-40/50-42LE Underdrive Ring Gear (.078" Thick) (4 7/8"OD) 1
89869A ..... Snap Ring, 50-40/50-42LE Spacer Inside #712 (.071" Thick) (3.170"OD) 2 Eyes 1
89870A ..... Snap Ring, 50-40/50-42LE Coast Clutch Top (4 9/16"OD) (.079" Thick) 1
89871A ..... Snap Ring, 50-40/50-42LE Holds Coast Clutch Piston Retainer In (.040" Thick) (2.025"OD)
..... 1999-Up 1
89873A ..... Snap Ring, 50-40/50-42LE Holds 2nd Brake Clutch Pressure Plate In (.062" Thick) (6 5/8"OD)
..... 1999-Up 1
89876A ..... Snap Ring, 50-40/50-42LE Forward Clutch Top (.063" Thick) (5 3/4"OD) 1
89878A ..... Snap Ring, 50-40/50-42LE Direct Clutch (.079" Thick) (4 9/16"OD) 1
89879A ..... Snap Ring, 50-40/50-42LE Forward & Direct Clutch Retainer (.040" Thick) (2.030"OD) 1
89882A ..... Snap Ring, 50-40/50-42LE Rear Hub (3.715"OD) (.055" Thick) 1
89883A ..... Snap Ring, 50-40/50-42LE Retainer To Case (3.548"OD) (.080" Thick) 1
89884A ..... Snap Ring, 50-40/50-42LE Low/Reverse Retainer (6 5/8"OD) (.047" Thick) 1
89885A ..... Snap Ring, 50-40/50-42LE Low/Reverse Top (0.62" Thick) (6 5/8"OD) 1
89886A ..... Snap Ring, 50-40/50-42LE Sprag (5.090"OD) (.039" Thick) 1
89889A ..... Snap Ring, 50-40/50-42LE Rear Hub To Ring Gear (.055" Thick) (5 1/4"OD) 2 Holes In Ends 1
89896A ..... Snap Ring, 50-40/50-42LE Servo (2.050"OD) (.070" Thick) 1
89905A ..... Servo Assembly, 50-40/50-42LE Intermediate (2 Grooves) (4 Pieces) 1
89925A ..... Accumulator Assembly, 50-40/50-42LE Intermediate (3 Pieces) 1
89930 ..... Accumulator Assembly, 50-40LE Rear Cover (3 1/16" Spring Length) Rest Is Like 50-42LE 1
89930A ..... Accumulator, 50-42LE Forward & Direct Assembly (2 Bolt Aluminum Cover) Piston & Spring
..... In Rear Cover (2 5/8" Spring Length) 1
89964A ..... Piston, 50-40/50-42LE Forward Clutch (4.188"OD) 1.855"ID (With 1 Check Ball) 1
89965A ..... Piston, 50-40/50-42LE Direct Clutch (.532" Thick At Edge) Aluminum (With Check Ball And
..... 16 Spring Pockets) 1
89967A ..... Piston, 50-40/50-42LE Low/Reverse Clutch (1.222" Thick) (6 1/4"OD) 1
89982A ..... Retainer W/Springs, 50-40/50-42LE 2nd Brake Clutch (12 Springs) 4.875"ID (5.800"OD)
..... 1999-Up 1
89985A ..... Springs W/Retainer, 50-40/50-42LE Forward & Direct Clutch Return (16 Springs) (.950" Thick)
..... (3.125"OD) (1.840"ID) 1
89987A ..... Retainer W/Springs, 50-40/50-42LE Low/Reverse Clutch (.775" Thick) 6 5/16"OD (15 Springs)
..... 1999-Up 1
89989A ..... Retainer W/Springs, 50-40/50-42LE Coast Clutch (15 Springs) 1.840"ID (3.150"OD) 1999-Up 1
89991-4 ..... Rooster Comb, 50-40LE (3.492" Long) (7 Detent Notches) 1
89991A-2 ..... Detent Sprins, 50-40/50-42LE (7 1/8" Long) (2 Bolt) 1
89991A-4 ..... Rooster Comb, 50-42LE (3.660" Long) (6 Detent Notches) 1
89991A-6 ..... Bracket, 50-40/50-42LE Bolt Forked At One End 1
89994-4 ..... Pin, 50-40LE Park Actuator (1 3/4" Long) With Pilot Tip 1
89994A ..... Park Rod, 50-40/50-42LE (9 5/8" Long) 1
89994A-4 ..... Pin, 50-42LE Park Actuator (1 9/16" Long) No Pilot 1
89994A-5 ..... Bracket Assembly, 50-40/50-42LE Intermediate Accumulator (3 Pieces) 1
89995A ..... Park Pawl Assembly, 50-40/50-42LE (4.760" Long) (.418" Thick At Lug) (3 Pieces) 1
89996A ..... Fitting, 50-40/50-42LE Cooler (1.240" Long) (.860" At Flats) 2
89999A ..... Tube, 50-40/50-42LE Differential Bearing Oiler (4 5/8" Long) 1
89999AK ..... Tube Set, 50-40/50-42LE Rear Case (2 Pieces) 1

© Whatever It Takes Transmission Parts. Inc.

002 OHK Kit

004 Master L/Steels Kit

006 Master W/Steels Kit

030 Bushing Kit

175 Ring Kit

119 Friction Module

139 Steel Module

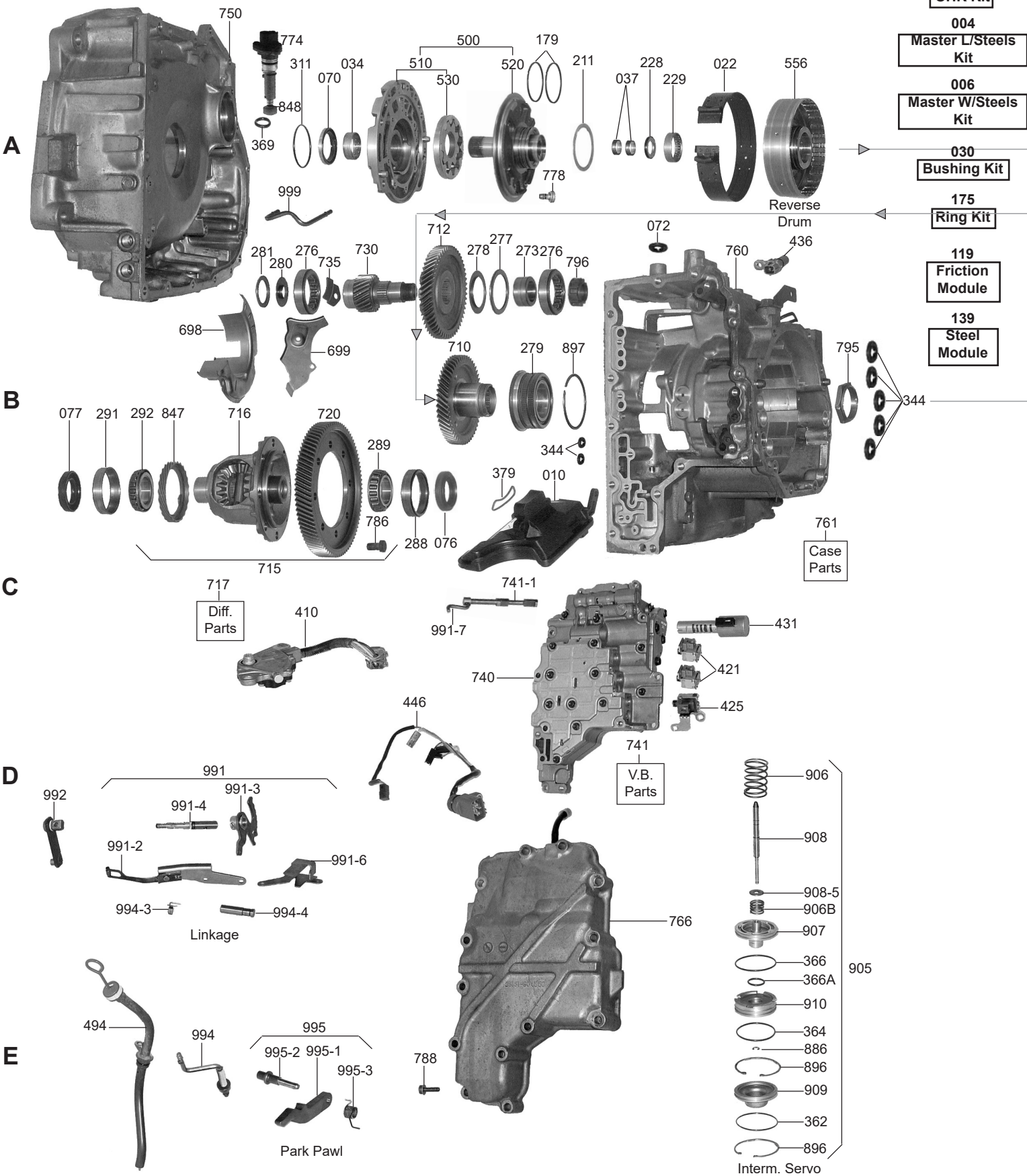

© Whatever It Takes Transmission Parts. Inc.

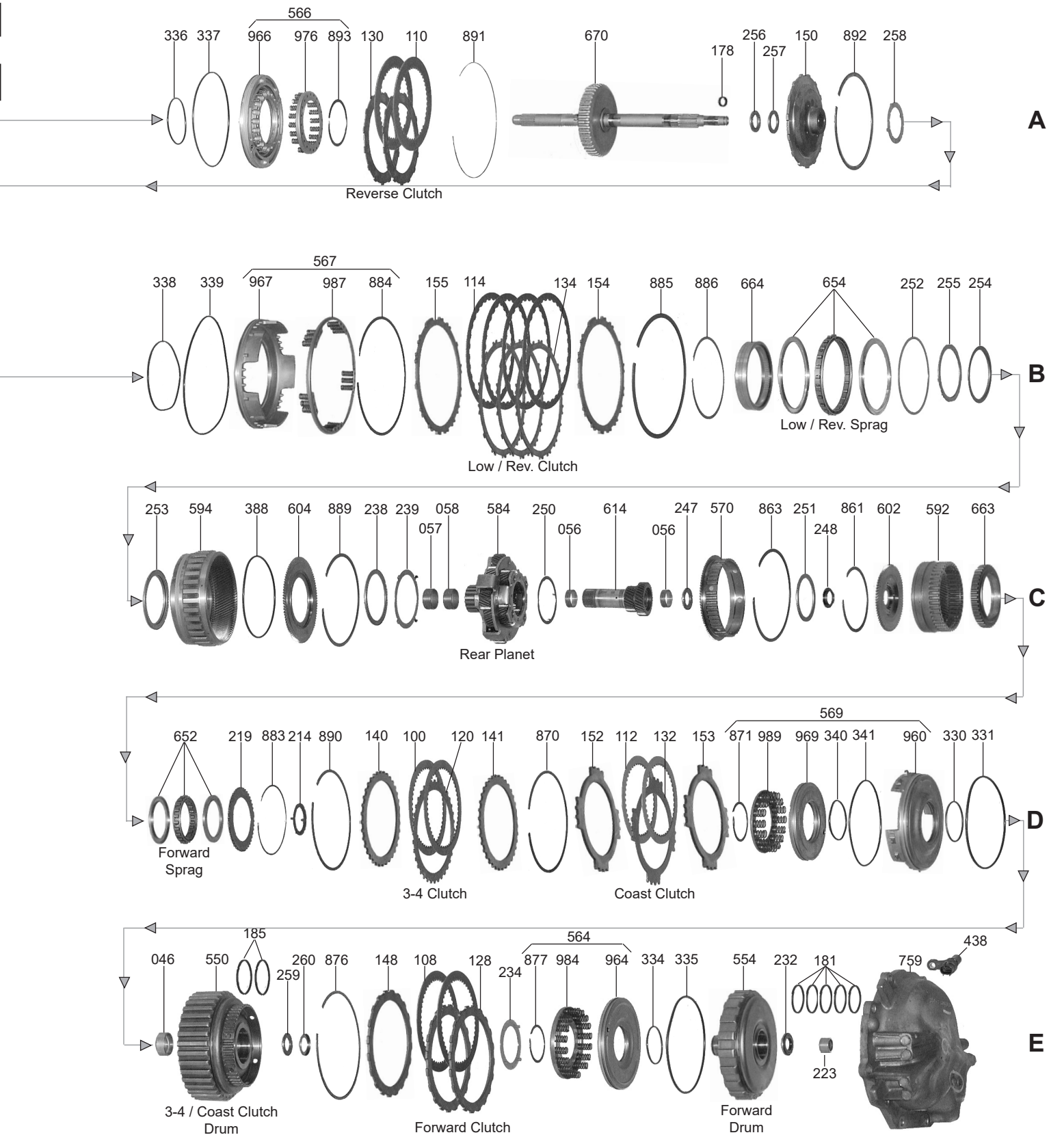

AISIN WARNER

© Whatever It Takes Transmission Parts. Inc.

PART #	OVERHAUL KITS	QTY.	REFERENCE #
121002A	Overhaul Kit, 60-40LE/60-42LE/60-41SN 1995-Up	1	

PART #	MASTER L/STEEL KIT	QTY.	REFERENCE #
121004A	Master L/Steels Kit, 60-40LE/60-42LE/60-41SN 1995-Up	1	

PART #	MASTER W/STEEL KIT	QTY.	REFERENCE #
121006A	Master W/Steels Kit, 60-40LE/60-42LE/60-41SN 1995-Up	1	

PART #	FILTER	QTY.	REFERENCE #
121010A	Filter, 60-40LE/60-42LE/60-41SN 1995-Up	1	26445-60G10

PART #	BANDS	QTY.	REFERENCE #
121022A	Band, 60-40LE Intermediate (Flex) 1993-Up	1	26971-60G10

PART #	BUSHINGS	QTY.	REFERENCE #
121030	Bushing Kit, 60-40LE 1993-Up	1	

PART #	METAL CLAD SEALS	QTY.	REFERENCE #
121070A	Use 57070A	1	
57070A	Seal, 60-40LE/60-42SN/60-42LE Pump	1	
121076A	Seal, 60-40LE/41SN/42LE Axle (Case Side) 1995-Up (Also Fits The Bell Housing Side 1995-E97)	1	
121077A	Seal, 60-40LE/41SN/42LE Axle (Bell Housing Side) 1995-E97 (Use 121076A)	1	
121077AA	Seal, 60-40LE/41SN/42LE Axle (Bell Housing Side) L1997-Up	1	

PART #	FRICTION CLUTCH	QTY.	REFERENCE #
121100A	Friction, 60-40LE 3-4 Clutch (.067") (51 Teeth) (Also Forward Clutch)	2-4	90444669
121108A	Use 121100A	2	90444669
121110A	Friction, 60-40LE Reverse Clutch (.075") (42 Teeth) (5.257"OD)	2	90444546
121112A	Friction, 60-40LE Coast Clutch (.707") (44 Teeth)	2	90444685
89114A	Friction, 60-40LE Low / Reverse Clutch (.067") (33 Teeth) (6 .302"OD)(Smooth Lining)	4	90348808
121119A	Friction Module, AW60-40LE 1995-Up	1	

PART #	STEEL CLUTCH	QTY.	REFERENCE #
121120A	Steel, 60-40LE 3-4 Clutch (.071") (36 Teeth)	1	90444885
121128A	Steel, 60-40LE Forward Clutch (.069") (20 Teeth)	2	
121130A	Steel, 60-40LE Reverse Clutch (.071") (15 Lugs) (4.092"ID)	2	90444686
121132A	Steel, 60-40LE Coast Clutch (.072") (16 Teeth)	1	90444863
121134A	Steel, 60-40LE Low / Reverse Clutch (.071") (15 Teeth)	3	90444973
121139A	Steel Module, AW60-40LE 1995-Up	1	

PART #	CLUTCH PRESSURE PLATES	QTY.	REFERENCE #
121140AB	Pressure Plate, 60-40LE 3-4 Clutch (Top) (.142") (36 Teeth) Also Fits 3-4 Clutch Bottom	1-2	
121140AC	Pressure Plate, 60-40LE 3-4 Clutch (Top) (.150") (36 Teeth) Also Fits 3-4 Clutch Bottom	1-2	
121148AB	Pressure Plate, 60-40LE Forward Clutch (Top) (.142")	1	
121148AC	Pressure Plate, AW60-40LE Forward Clutch (top) (.150") (20 Teeth)	1	
121150A	Pressure Plate, 60-40LE Reverse Clutch With Splined Hub (15 Lugs) (.160" Thick At Edge)	1	
121152AB	Pressure Plate, 60-40LE Coast Clutch (Top) (.126") (16 Teeth) Also Fits Coast Clutch Bottom	1-2	
121152AE	Pressure Plate, 60-40LE Coast Clutch (Top) (.155") (16 Teeth) Also Fits Coast Clutch Bottom	1-2	
121155A	Pressure Plate, 60-40LE Low / Reverse Clutch (Top) (.42") (15 Teeth) Also Fits Low / Reverse Clutch Bottom	1-2	

PART #	OIL SEALING RINGS	QTY.	REFERENCE #
121175	Ring Kit, 60-40LE	1	

© Whatever It Takes Transmission Parts. Inc.

PART #	WASHERS & BEARINGS	QTY.	REFERENCE #
121200A	Washer Kit, 60-40LE (5 Washers) 1995-04	1	
121211A	Washer, 60-40LE Stator To Reverse Clutch Drum (.060") Plastic (1 Tab)	1	
121214A	Washer, 60-40LE Rear Ring Gear Hub To 3-4 Coast Clutch Drum (4 Tab) Plastic	1	
121219A	Race, 60-40LE Forward Sprag (40 Teeth) (2.460"ID) (.117" Thick)	1	
121223A	Caged Bearing, 60-40LE Rear Cover (BKM131715J)	1	
121228A	Bearing W/Races, 60-40LE Stator To Reverse Clutch Hub Input Shaft	1	24171-60G10
121229A	Caged Bearing, 60-40LE Stator To Reverse Drum (1.770"OD) (.468" Wide)	1	24733-60G10
121232A	Bearing W/Races, 60-40LE Forward Clutch Drum To Rear Cover (1.231"OD) (.639"ID) (.140" Thick)	1	
121234A	Washer, 60-40LE Forward Clutch Drum To 3-4 Coast Clutch Drum (4 Tab) Plastic	1	
121238A	Bearing W/Race, 60-40LE Planet To Front Ring Gear Hub (3.276"OD)	1	24912-60G10
121239A	Race, 60-40LE Planet To Front Ring Gear Hub (4 Tab)	1	24913-60G10
121247A	Bearing W/Race, 60-40LE Sun Gear To Rear Ring Gear Hub (1.270"OD) (.745"ID) Also Fits Forward Drum To Rear Ring Gear Hub	1-2	24935-60G10
121248A	Race, 60-40LE Sun Gear To Rear Ring Gear Hub	1	24955-60G10
121250A	Race, 60-40LE Planet To Rear Ring Gear Hub (4 Tab)	1	24916-60G10
121251A	Bearing W/Race, 60-40LE Planet To Rear Ring Gear Hub	1	24915-60G10
121252A	Race, 60-40LE Sprag To Front Ring Gear (Plastic) (.058" Thick)	1	
121253A	Bearing W/Race, 60-40LE Low / Reverse Inner Race To Front Planet (2.550"ID)	1	
121254A	Race, 60-40LE Low / Reverse Sprag Inner Race Spacer Bearing (2.690"ID)	1	
121255A	Spacer, 60-40LE Low / Reverse Inner Race To Bearing Race (.078")	1	
121256A	Bearing W/Race, 60-40LE Input Shaft To Reverse Clutch Pressure Plate (1.225"OD) (.738"ID) (.110" Thick)	1	
121257A	Race, 60-40LE Input Shaft To Reverse Clutch Pressure Plate (.079") (1.310"OD)	1	
121258A	Washer, 60-40LE Reverse Clutch Pressure Plate To Drive (.056" Thick) (4 Tabs)	1	
121259A	Use 121247A	1	
121260A	Race, 60-40LE Forward Drum To Rear Ring Gear Hub	1	
121273A	Inner Race, 60-40LE Pinion Shaft To Roller Bearing (06NU0716/20 KOYO)	1	
121276A	Roller Bearing, 60-40LE Pinion Shaft To Bell Housing (Cast # RNU090716-1) Also Fits Pinion Shaft To Case	1-2	24193-60G10
121277A	Bearing W/Race, 60-40LE Driven Transfer Gear To Case	1	24186-60G10
121278A	Race, 60-40LE Driven Transfer Gear To Case	1	24187-60G10
121279A	Ball Bearing, 60-40LE Drive Transfer Gear Support (2 Rolls Of Ball Bearings) (FBD49-1 G NSK)	1	
121280A	Race, 60-40LE Pinion Shaft To Bell Housing	1	24189-60G10
121281A	Bearing W/Race, 60-40LE Pinion Shaft To Bell Housing	1	24188-60G10
121288A	Cup Race, 60-40LE Differential Housing To Bell (Cast # TR080702J) Also Fits Differential Housing To Case # 291)	1-2	
121289A	Cone Bearing, 60-40LE Differential Housing To Bell Housing (Cast # TRO80702J) Also Fits Differential Housing To Case #292)	1-2	
121291A	Use 121288A	1	
121292A	Use 121289A	1	

PART #	ELECTRICAL COMPONENTS	QTY.	REFERENCE #
121410A	Switch, 60-40LE Neutral Safety (Tag # 60A030) (Tag #60A050) and 9 Blade Connector	1	37720-60G11
121421A	Solenoid, 60-40LE Shift	2	26426-60G11
121425A	Solenoid, 60-40LE Lock-Up	1	
121431A	Solenoid, 60-40LE Duty	1	26427-60G10
121436A	Sensor, 60-40LE Output Speed (Reads Off The Pinion Nut) (Grey)	1	26141-60G10
121438A	Sensor, 60-40LE Turbine Shaft (Reads Off The Forward Drum) (Black)	1	26143-60G10
121445A	Wire Harness, 60-40LE External	1	
121446A	Wire Harness, 60-40LE Internal (7 Prong Case Connector) With 5 2-Prong Connectors	1	

PART #	MISC. COMPONENTS	QTY.	REFERENCE #
121492A	Drain Plug, 60-40LE (Allen Head)	1	
121494A	Tube, 60-40LE Filler Tube With Dipstick	1	

PART #	HARD PARTS	QTY.	REFERENCE #
121500A	Complete Pump, 60-40LE (Cast Letter "C")	1	
121510A	Pump Body, 60-40LE With Gears (Cast Letter "C")	1	
121520A	Stator, 60-40LE (Cast Letter "C")	1	22820-60G10
121530A	Pump Gear Set, 60-40LE (.373" Thick)	1	
121550A	Drum, 60-40LE 3-4 Coast Clutch	1	
121554A	Drum, 60-40LE Forward Clutch (2 Clutch) (20 Teeth Steels)	1	
121556A	Drum, 60-40LE Reverse Clutch (2 Clutch)	1	

© Whatever It Takes Transmission Parts. Inc.

PART #	HARD PARTS (Continued)	QTY.	REFERENCE #
121564A	Piston Kit, 60-40LE Forward Clutch	1	
121566A	Piston Kit, 60-40LE Reverse Clutch (For 2 Clutch Drum) (20 Spring Pockets) (18 Spring Retainer) (.031" Thick Snap Ring)	1	
121567A	Piston Kit, 60-40LE Low / Reverse Clutch (Cast # 3B) Piston 1.265" Thick x 6 1/8" OD (Retainer Is Same OD)	1	
121569A	Piston Kit, 60-40LE 3-4 Coast Clutch (16 Springs) (8 Lug Piston) (2.150"ID)	1	
121570A	Hub, 60-40LE 3-4 Clutch Hub	1	
121584A	Planet, 60-40LE (Uses A 26 Teeth / 35 Teeth Sun Gear)	1	24910-60G10
121592A	Ring Gear, 60-40LE Rear & Coast Clutch Hub	1	
121594A	Ring Gear, 60-40LE Front & Low/Reverse Clutch Hub (33 Outer Teeth) (2.270" Thick)	1	
121602A	Hub, 60-40LE Rear Ring Gear (.833"ID) (4 Holes)	1	
121604A	Hub, 60-40LE Front Ring Gear (98 Teeth) (2.615"ID)	1	
121614A	Sun Gear, 60-40LE (26 Teeth / 35 Teeth)	1	24931-60G10

PART #	SPRAGS & ONE WAY CLUTCHES	QTY.	REFERENCE #
121652A	Sprag, 60-40LE Forward With Brass Races (22 Lugs) (.434" Thick)	1	26672-60GT0
121654A	Sprag, 60-40LE Low / Reverse With Brass Races (24 Lugs) (.450" Thick)	1	

PART #	HARD PARTS (Continued)	QTY.	REFERENCE #
121663A	Outer Race, 60-40LE Forward Sprag (.573" Thick) (2.663"ID) (44 Teeth)	1	
121664A	Inner Race, 60-40LE Low / Reverse Sprag (.670" Thick) (3.835"OD)	1	
121670A	Shaft, 60-40LE Input With Reverse Clutch Hub (16 Converter Splines / 16 Rear Splines) 12 1/2" Long (44 Teeth) Clutch Hub	1	
121698A	Oil Baffle, 60-40LE Differential To Bell Housing (3 Bolt Tin)	1	
121699A	Oil Baffle, 60-40LE Differential To Case (3 Bolt Tin)	1	
121710A	Gear, 60-40LE Drive Transfer (53 Teeth)	1	24510-60G11
121712A	Gear, 60-40LE Driven Transfer (54 Teeth) Fits 121720A Drive Gear (With 12 Park Lugs)	1	
121716A	Differential Housing, 60-40LE With Spider Gears (.980"ID Axle Hole)	1	
121720A	Ring Gear, 60-40LE Differential (87 Teeth / 3 Groove) Fits 121730A Pinion	1	
121730A	Pinion, 60-40LE Shaft (23 Teeth / 3 Groove) Fits 121720A Ring Gear	1	
121735A	Oil Baffle, 60-40LE Pinion Shaft To Bell (1 Bolt)	1	
121740A	Valve Body, 60-40LE (4 Solenoid Type)	1	26500-65G30
121750A	Bell Housing, 60-40LE (Cast # 60A080)	1	
121759A	Rear Cover, 60-40LE (Cast # 35143-60A010) (10 Bolt) Aluminum	1	24731-60G10
121760A	Case, 60-40LE (Pink Tag With # 60-42LE)	1	24710-60G12
121766A	Pan, 60-40LE Side (Aluminum) Cast # 35151-60A050 (13 Bolt)	1	24751-60G11
121774A	Speed-O Housing, 60-40LE (With 20 Teeth Driven Gear) With 2 Prong Connector	1	
121778AK	Bolt Set, 60-40LE Holds Stator To Body (8 Pieces)	1	
121786AK	Bolt Set, 60-40LE Differential Ring Gear With Lock Tabs (8 Per Set)	1	
121795A	Nut, 60-40LE Hold Drive Transfer Gear To Bearing Support (2.158"OD At Flats)	1	
121796A	Nut, 60-40LE Pinion Shaft Roller Bearing (12 Teeth Rotor) Right Hand Threads	1	
121847A	Gear, 60-40LE Speed-O (23 Teeth) Plastic	1	
121861A	Snap Ring, 60-40LE Holds Rear Ring Gear To Hub	1	
121863A	Use 89889A.	1	
121870A	Use 121890A.	1	
121871A	Snap Ring, 60-40LE Coast Clutch Retainer (.040" Thick) (2.210"OD)	1	
121876A	Snap Ring, 60-40LE Holds Forward Clutch Pressure Plate In Drum	1	
121877A	Snap Ring, 60-40LE Forward Retainer (.040" Thick) (2.135"OD)	1	
121883A	Snap Ring, 60-40LE Holds Forward Sprag In Rear Ring Gear	1	
89884A	Snap Ring, 60-40LE Low/Reverse Retainer (6 5/8"OD) (.080" Thick)	1	
121885A	Snap Ring, 60-40LE Holds Low / Reverse Clutch Top Pressure Plate (.063")	1	
121886A	Snap Ring, 60-40LE Holds Low / Reverse Sprag In Front Ring Gear (.039" Thick) (4 13/16"OD)	1	
89889A	Snap Ring, 60-40LE 3-4 Clutch Hub To Front Ring Gear (Also Fits Front Hub To Front Ring Gear)	1-2	
121890A	Snap Ring, 60-40LE Holds 3-4 Clutch Pressure Plate In Drum (Also Holds Coast Clutch Pressure Plate In Drum)	1-2	
121891A	Snap Ring, 60-40LE Reverse Clutch Pressure Plate (Bottom) (.047" Thick)	1	
121892A	Snap Ring, 60-40LE Reverse Clutch Pressure Plate (Top) (.063") (5 5/8"OD)	1	
121893A	Snap Ring, 60-40LE Reverse Clutch Retainer (2.615"OD) (.031" Thick)	1	
121897A	Snap Ring, 60-40LE Holds Drive Gear In Case (3.260"OD) (.078" Thick) Waved	1	
121905A	Servo Assembly, 60-40LE Intermediate	1	
121991A	Linkage, 60-40LE Internal	1	
121992A	Shift Lever, 60-40LE External	1	
121994A	Park Pawl Actuator, 60-40LE	1	25920-60G10
121995A	Park Pawl Assembly, 60-40LE	1	

© Whatever It Takes Transmission Parts. Inc.

121999A ..... Oil Tube Set, 60-40LE ..... 1 .....

© Whatever It Takes Transmission Parts. Inc.

AW55-50SN / AW55-51SN (AF23/AF33/RE5F22A) FWD 5 Speed

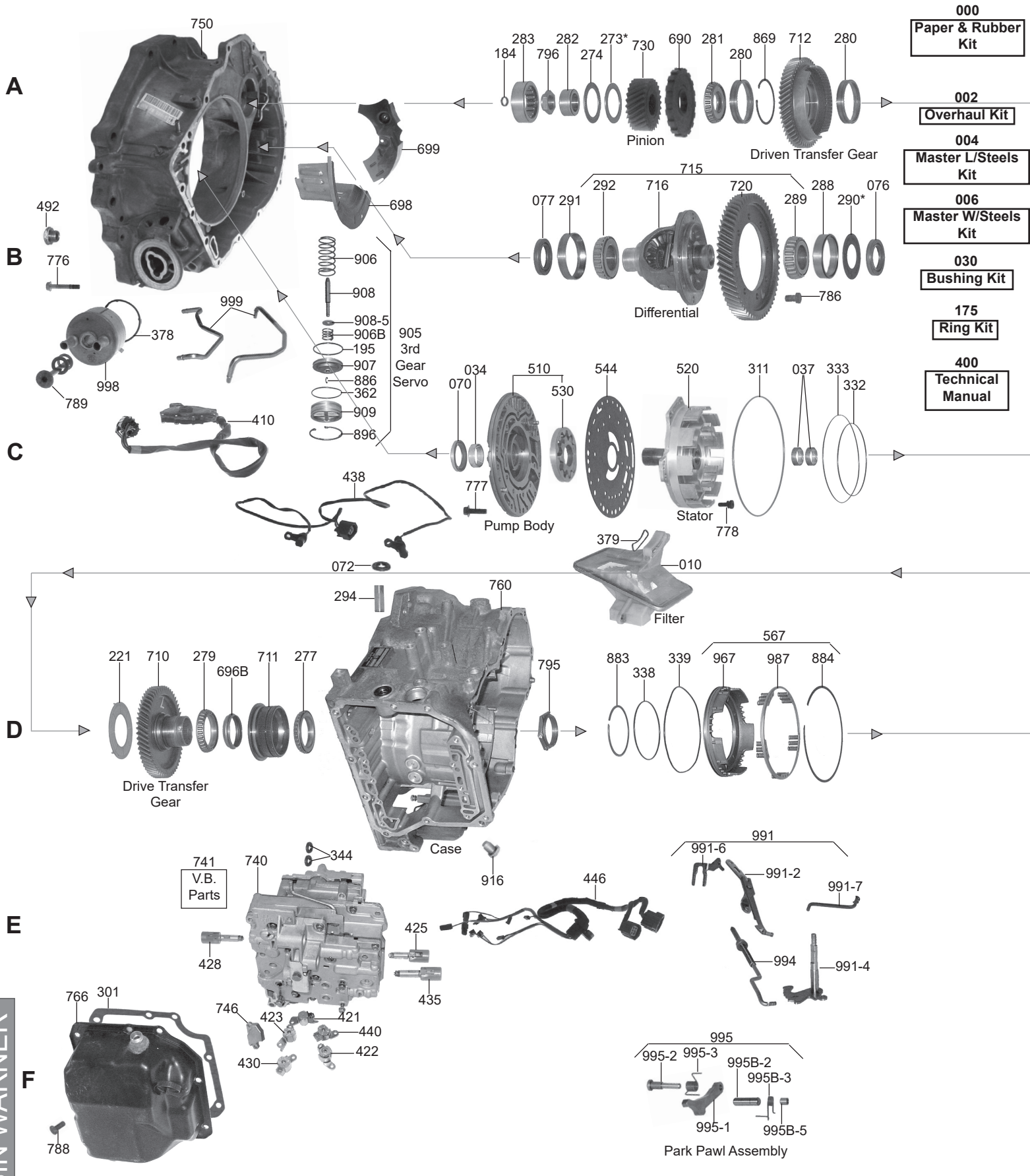

© Whatever It Takes Transmission Parts. Inc.

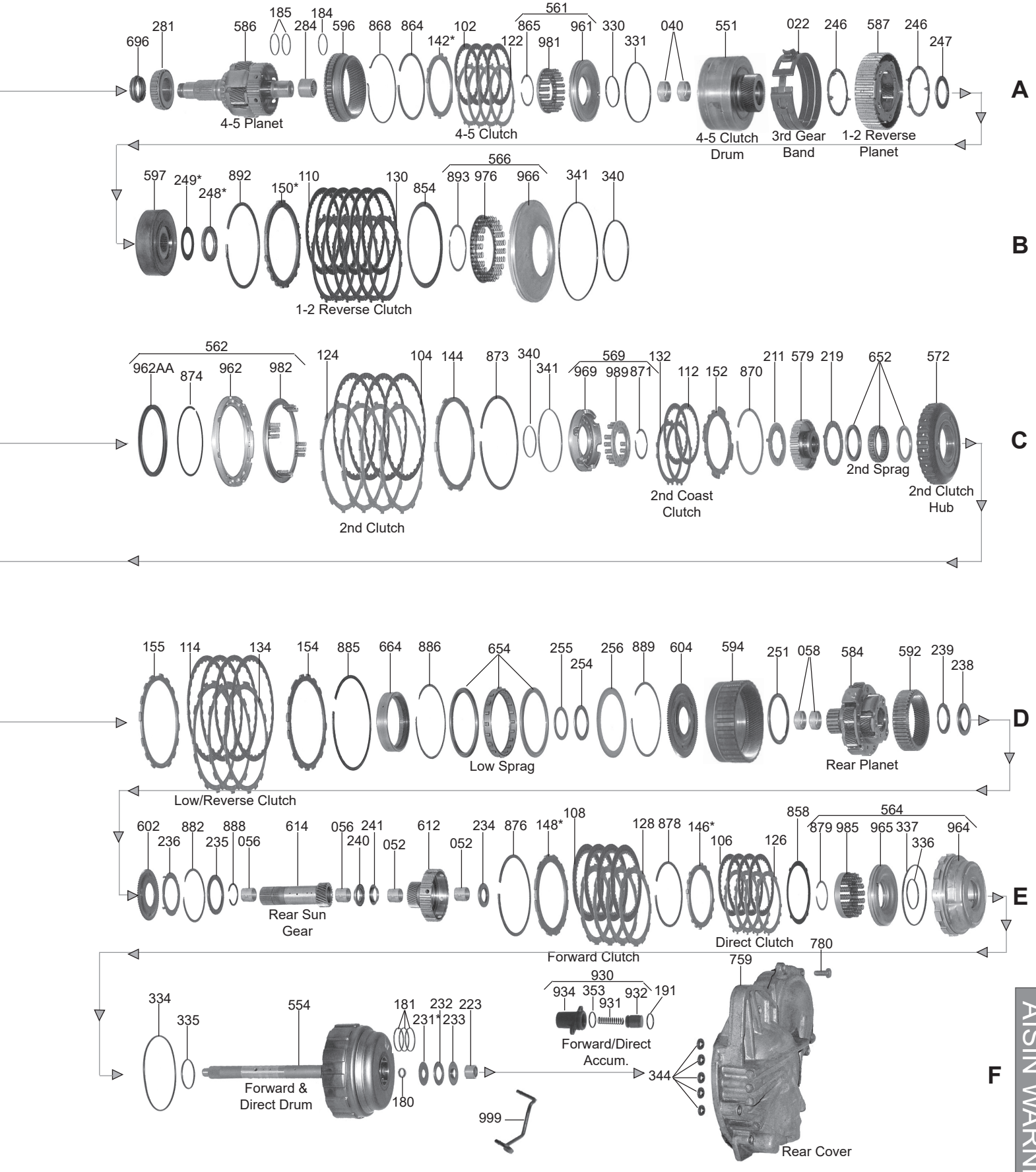

AISIN WARNER

© Whatever It Takes Transmission Parts. Inc.

PART #	PAPER & RUBBER KIT	QTY	REFERENCE #
21000A	Paper & Rubber Kit, AW55-50SN / AW55-51SN 2000-Up	1	
21001A	Sub Kit, AW55-50SN (Volvo) Transfer CAse 2000-Up	1	

PART #	OVERHAUL KIT	QTY	REFERENCE #
21002A	Overhaul Kit, AW55-50SN / AW55-51SN 2000-Up	1	

PART #	MASTER L/STEELS KIT	QTY	REFERENCE #
21004A	Master L/Steels Kit, AW55-50SN 2000-07	1	
21004AA	Master L/Steels Kit, AW55-51SN 1999-Up	1	

PART #	MASTER W/STEELS KIT	QTY	REFERENCE #
21006A	Master W/Steels Kit, AW55-50SN / AW55-51SN 2000-Up	1	
21006AA	Master W/Steels Kit, AW55-51SN (Volvo) 1999-Up (Nissan RE5F22A 2003-07)	1	

PART #	FILTERS	QTY	REFERENCE #
21010A	Filter, AW55-50SN / AW55-51SN (GM / Saab / Saturn / Volvo) 1999-Up (No Ribs On Filter)	1	
21010C	Filter, AW55-50SN / AW55-51SN (Chevy/Pontiac) 1999-07	1	
21010F	Filter, AW55-50SN / AW55-51SN (Volvo) / RE5F22A (Nissan & Infinity) 2001-Up (Ribbed)	1	

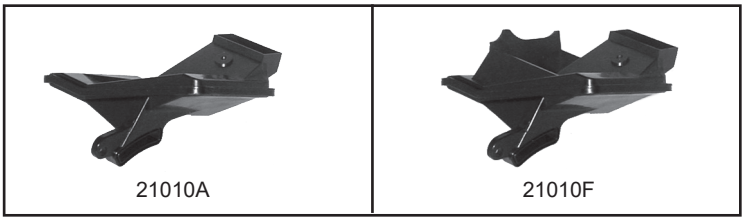

21010A

21010F

PART #	BAND	QTY	REFERENCE #
21022A	Band, AW55-50SN / AW55-51SN 3rd Gear (2 1/16” Wide) (Double Wrap) 2000-Up	1	

PART #	BUSHINGS	QTY	REFERENCE #
21030A	Bushing Kit, AW55-50SN / AW55-51SN 2000-Up (Contains: 037A, 037AA, 052B, 034A, Two # 056B) (Does Not Have # 058 Or 040)(This Kit Fits The .876”OD Input Shaft On The #554 Drum)	1	
21030AA	Bushing Kit, AW55-50SN / AW55-51SN 2000-Up (Contains: # 037A, 037AA, 052B, 034A & Two 056A)(Does Not Have # 058 Or # 040)(This Kit Fits The .846”OD Input Shaft On The #554 Drum)	1	
21030AC	Bushing Kit, AW55-50SN/AW55-51SN 2000-Up (Combo) (11 Bushings)	1	
21034A	Use 57034A.	1	
57034A	Bushing, AW55-50SN/AW55-51SN Pump Body (1.500”ID)(Brass W/Oil Pocket) 2000-Up	1	
21034AC	Bushing, AW55-50SN/51SN Pump Body (Coated) 2000-Up	1	
21037A	Bushing, AW55-50SN / AW55-51SN Stator (Rear) Grooved (Brass)(.670”Wide)(.876”ID) 2000-Up	1	
21037AA	Bushing, AW55-50SN / AW55-51SN Stator (Center) (Brass) 2000-Up	1	
21040A	Bushing, AW55-50SN / AW55-51SN 4-5 Clutch Drum (1.425”OD) 2000-Up (Must Use 21040AK)	2	
21040AK	Bushing/Sleeve Kit, AW55-50SN/AW55-51SN 4-5 Clutch Drum 2000-Up (Contains: 1 Wide Bushing & 1 Steel Sleeve)(To Replace The 2 Bushings In The 4-5 Clutch Drum, You Must Press Out The Steel Sleeve First & Then The 2 Bushings & Replace With The Wide Bushing And Steel Sleeve)	1	
21052A	Use 21056B (This Is The 2 Piece Type Bushing)	1	
21052B	Bushing, AW55-50SN / AW55-51SN Direct Clutch Hub With Sun Gear (1 Piece Type)(.870”ID) 2000-Up	1	
21056A	Bushing, AW55-50SN Rear Planet Sun Gear (Front & Rear) .845”ID (.970”OD) 2000-Up	2	
21056B	Bushing, AW55-51SN Rear Planet Sun Gear (Front & Rear) .870”ID (.970”OD) 2000-Up (Also Fits AW55-50SN Sun Gear With Hub #612 2000-Up)	2-4	
89058A	Bushing, AW55-50SN / AW55-51SN Rear Planet (#058)(Front) No Groove (.495” Wide)(1.165”ID) 2000-Up	1	

© Whatever It Takes Transmission Parts. Inc.

89058B ..... Bushing, AW55-50SN/AW55-51SN Rear Planet (#058)(Rear) With Groove (.740" Wide)(1.165"ID) 2000-Up 1
89058C ..... Bushing, AW55-50SN/AW55-51SN Rear Planet (#058)(1 Piece)(Replaces The 2 Bushings) ..... (Planet Must Be Machined Between The 2 Bushings To Use This Bushing) 1

PART #	METAL CLAD SEALS	QTY	REFERENCE #
57070A	Seal, AW55-50SN / AW55-51SN Pump	1	
21072A	Seal, AW55-50SN / AW55-51SN Linkage (.875"OD) (.440"ID) (Cast # NOK AE0371R) 2000-Up	1	
89076A	Seal, AW55-50SN / AW55-51SN Axle Both Sides (Some Volvo)(1.520"ID)(2.483"OD) 2000-Up	1-2	
21076C	Seal, AW55-50SN (GM) Axle (Converter Housing Side) 2005-07 (2WD Equinox/Torent)	1	
21077A	Seal, AW55-50SN (Volvo) Axle (Bell Housing Side) (2.958"OD) 2000-Up	1	
255077AC	Seal, AW55-50SN Some Saturn/Saab/GM Axle (2.173"OD)(1.310"ID)	1	
21077C	Seal, AW55-50SN (GM) Axle (Bell Housing Side) (2.400"OD) 2005-Up	1	
21077D	Seal, AW55-50SN (Saturn) Axle (Bell Housing Side) (2.145"OD) 2002-Up	1	

PART #	FRICTION CLUTCH	QTY	REFERENCE #
21102A	Friction, AW55-50SN / AW55-51SN 4-5 Clutch (.068") 34 Teeth (4.483"OD)(Waved) 2000-Up	4	
21102B	Friction, AW55-51SN 4-5 Clutch (.059")(34 Teeth)(4.482"OD) 2005-Up	4	
89104AA	Friction, AW55-50SN 2nd Clutch (.067") 40 Teeth (6.302"OD) 2000-Up	4	
89104AC	Friction, AW55-51SC 2nd Brake Clutch (.075")(40 Teeth) 2005-Up	4	
21106A	Use 89112A	4	
89112A	Friction, AW55-50SN/AW55-51SN 2nd Coast Clutch #112 & Direct Clutch #106 (.067")(34 Teeth) (4.260"OD)	4	
21106B	Friction, AW55-51SN Direct Clutch (.059") 34 Teeth (4.260"OD) 2005-Up	4	
21108A	Friction, AW55-50SN / AW55-51SN Forward Clutch (.068") 49 Teeth (5.375"OD) 2000-Up	4	
21110A	Friction, AW55-50SN / AW55-51SN 1-2 Reverse Clutch (.068") 47 Teeth (5.540"OD) 2000-Up	6	
89112A	Friction, AW55-50SN / AW55-51SN 2nd Coast Clutch (.067") 34 Teeth (4.260"OD) 2000-Up	3	
89114A	Friction, AW55-50SN/AW55-51SN Low/Reverse Clutch (.067") 33 Teeth (6.302"OD)	4	
21114B	Use 89114A	5	
21119A	Friction Module, AW55-50SN 2000-Up (.067" Direct Clutch)(Flat)(Fits Some Volvo & Various Saab, Suzuki & Nissan)	1	
21119AA	Friction Module, AW55-51SN 1999-Up (.059" Direct Clutch) (Fits Some Volvo & Various Nissan & Infinity)	1	

PART #	STEEL CLUTCH	QTY	REFERENCE #
21122A	Use 89126AA	4	
89126AA	Steel, AW55-50SN / AW55-51SN 4-5 Clutch (.071")(18 Teeth)(3.582"ID) 2000-Up	1	
89124AC	Steel, AW55-50SN / AW55-51SN 2nd Clutch (.071") 10 Teeth (5.538"ID) 2000-Up	4	
21126A	Use 89126A	4	
89126A	Steel, AW55-50SN / AW55-51SN Direct Clutch (.071")(12 Teeth)(3.582"ID) 2000-Up	4	
21128A	Use 89128AA	4	
89128AA	Steel, AW55-50SN / AW55-51SN Forward Clutch (.077")(12 Teeth)(4.491"ID) 2000-Up	4	
21130A	Steel, AW55-50SN / AW55-51SN 1-2 Reverse Clutch (.070") (4.899"ID) 2000-Up	6	
89132A	Steel, AW55-50SN / AW55-51SN 2nd Coast Clutch (.071") 8 Teeth (3.582"ID) 2000-Up	2	
21134A	Steel, AW55-50SN / AW55-51SN Low/Reverse Clutch (.070") (5.655"ID) 2000-Up	3-4	

PART #	PRESSURE PLATES	QTY	REFERENCE #
21142AA	Pressure Plate, AW55-50SN / AW55-51SN 4-5 Clutch (Selective) 18 Teeth (3.590"ID) 2000-Up	1	
21144A	Pressure Plate, AW55-50SN / AW55-51SN 2nd Clutch (.142") 10 Teeth (5.540"ID) 2000-Up		
21144AA	Pressure Plate, AW55-50SN / AW55-51SN 2nd Clutch (.150") 10 Teeth (5.540"ID) 2000-Up	1	
89146A	Pressure Plate, AW55-50SN / AW55-51SN Direct Clutch (.150") 12 Teeth (3.580"ID) 2000-Up	1	
89148A	Pressure Plate, AW55-50SN Forward Clutch (Top) 12 Teeth (.151") 4.490"ID (Stepped To .197") 2000-Up	1	
89148AA	Pressure Plate, AW55-50SN Forward Clutch (Top) 12 Teeth (.150") 4.490"ID (Flat) 2000-Up	1	
21148B	Pressure Plate, AW55-51SN Forward Clutch (.205") 12 Teeth (Flat) 2000-Up	1	
21150AA	Pressure Plate, AW55-50SN / AW55-51SN 1-2 Reverse Clutch (Top) Selective (12 Teeth) (4.890"ID) 2000-Up	1	
89152A	Pressure Plate, AW55-50SN 2nd Coast Clutch (Top) .138" (12 Spring Guides) 2000-Up	1	
21152B	Pressure Plate, AW55-51SN 2nd Coast Clutch (Top) .138" (8 Spring Guides) 2000-Up	1	
21154A	Use 21155AA	1	

© Whatever It Takes Transmission Parts. Inc.

PART #	PRESSURE PLATES (Continued)	QTY	REFERENCE #
21154B	Pressure Plate, AW55-51SN Low/Reverse Clutch (.098") 13 Teeth (5.655"ID) 2000-Up	1	
21155AA	Apply Plate, AW55-50SN / AW55-51SN Low/Reverse Clutch (Selective) 13 Teeth (5.660"ID) 2000-Up (Also Fits AW55-50SN #154 Pressure Plate)	1-2	

PART #	VALVE BODY KIT	QTY	REFERENCE #
T21165AA	Valve Body Kit, AW55-50SN 2000-Up (Transgo)(Includes New Solenoid Regulator Bushing & Valve And A New B4 Release Valve)	1	

PART #	SEALING RINGS	QTY	REFERENCE #
21175AT	Ring Kit, AW55-50SN / AW55-51SN (Teflon) 2000-Up	1	
89180AT	Ring, AW55-50SN / AW55-51SN Forward & Direct Drum Shaft (Small) Rear (Teflon) (Butt-Joint) 2000-Up	1	
21181AT	Ring, AW55-50SN / AW55-51SN Forward & Direct Clutch (Teflon)(Scarf Cut Joint) 2000-Up	3	
21184AT	Ring, AW55-50SN / AW55-51SN 4-5 Planet Shaft Pilot To Rear Cover (Teflon) (Scarf Cut Joint) 2000-Up	1	
21185AT	Ring, AW55-50SN / AW55-51SN 4-5 Clutch (Teflon) (Scarf Cut Joint) 2000-Up	2	
21191AT	Ring, AW55-50SN / AW55-51SN Forward & Direct Accummulator (Teflon)(Scarf Cut Joint) 2000-Up	1	

PART #	WASHERS & BEARINGS	QTY	REFERENCE #
21200A	Washer Kit, AW55-50SN/AW55-51SN 2000-Up (6 Washers)	1	
89211A	Washer, AW55-51SN Stator To Sprag Race (3 Tab Plastic) 2.919"OD (1.847"ID) 2000-Up	1	
21211A	Washer, AW55-50SN Stator To Sprag Race (3 Tab Metal)(.056" Thick) 2.460"OD (1.315"ID) 2000-Up	1	
89219A	Washer, AW55-50SN / AW55-51SN 2nd Coast Clutch Hub To 2nd Clutch Hub (3 Tab Plastic) (.073" Thick, 3.023"OD, 2.213"ID) 2000-Up	1	
89221A	Washer, AW55-50SN / AW55-51SN 2nd Coast Clutch Drum To Transfer Gear (3 Tab Plastic) .078" Thick (3.905"OD)(2.216"ID) 2000-Up	1	
21223A	Caged Needle Bearing, AW55-50SN Forward & Direct Drum Shaft To Rear Cover (13 Needles) .735"OD (Cast # KOYO BMK131914J) 2000-Up	1	
21223B	Caged Needle Bearing, AW55-51SN Forward & Direct Drum Shaft To Rear Cover (10 Needles) .835"OD (Cast # KOYO BKM132114BJ) 2000-Up	1	
89231A	Race, AW55-50SN / AW55-51SN Forward & Direct Drum To Rear Cover (.031" Thick) .536"ID (1.605"OD) 2000-Up	1	
21232A	Bearing, AW55-50SN / AW55-51SN Forward & Direct Drum To Rear Cover (.117" Thick) .910"ID (1.640"OD) 2000-Up	1	
21233A	Race, AW55-50SN Forward & Direct Drum To Rear Cover (Rear)(.031" Thick) .638"ID (1.604"OD) 2000-Up	1	
21233B	Race, AW55-51SN Forward & Direct Drum To Rear Cover (Rear)(.031" Thick) .867"ID (1.604"OD) 2000-Up	1	
21234B	Bearing W/Races, AW55-51SN Sun Gear With Hub To Forward/Direct Drum (.140" Thick) 1.700"OD (.903"ID) 2000-Up	1	
21235A	Bearing W/Race, AW55-50SN / AW55-51SN Ring Gear Hub To Direct Clutch Hub (.110" Thick) 2.547"OD (1.975"ID) 2000-Up	1	
89236A	Race, AW55-50SN / AW55-51SN Rear Hub To Sungear (4 Legs)(.031" Thick) 2.903"OD (2.090"ID) 2000-Up	1	
21238A	Bearing W/Race, AW55-50SN / AW55-51SN Rear Planet To Hub (2.515"OD)(1.831"ID) 2000-Up	1	
21239A	Race, AW55-50SN Rear Planet To Hub (2.395"OD) (1.705"ID) 2000-Up	1	
21239B	Race, AW55-51SN Rear Planet To Hub (2.395"OD) (1.975"ID) 2000-Up	1	
21240A	Bearing W/Race, AW55-50SN Rear Sun Gear To Sun Gear With Hub (.110" Thick) 1.505"OD (.912"ID) 2000-Up	1	
21241A	Race, AW55-50SN Rear Sun Gear To Sun Gear With Hub (.031" Thick) 1.370"OD (.912"ID) 2000-Up	1	
21246A	Washer, AW55-50SN / AW55-51SN 1-2 Reverse Planet (Both Sides) Plastic (3 Locking Tabs) .039" Thick (3.040"OD) 2000-Up	2	
21247A	Bearing, AW55-50SN / AW55-51SN Sun Gear To 1-2 Reverse Planet Ring Gear (.118" Thick) 2.287"OD (1.563"ID) 2000-Up	1	
21248A	Bearing W/Race, AW55-50SN / AW55-51SN 1-2 Reverse Planet Ring Gear To Rear Cover (.169" Thick) 1.460"ID (2.262"OD) 2000-Up	1	
21249BA	Shim, AW55-51SN 1-2 Reverse Planet Ring Gear To Rear Cover (Selective) (1.438"ID0 (2.265"OD) 2000-Up	1	

© Whatever It Takes Transmission Parts. Inc.

89251A ..... Bearing, AW55-50SN / AW55-51SN Rear Hub To Planet (3.493”OD) .140” Thick (2.900”ID) 2000-Up 1
21254A ..... Bearing W/Race, AW55-50SN / AW55-51SN Drive Transfer Gear To Rear Ring Gear Hub (.108” Thick) 2.435”OD (1.820”ID) 2000-Up 1
89255A ..... Race, AW55-50SN / AW55-51SN Ring Gear Hub (Front) 2.275”OD (1.732”ID) (.078” Thick) 2000-Up 1
21256A ..... Washer, AW55-50SN Sprag To Rear Ring Gear Hub (.100” Thick) 3.860”ID (Stepped) With 4 Half Moon Cuts 2000-Up 1
21273AA ..... Shim, AW55-50SN / AW55-51SN Pinion To Bearing #283 (Selective) 2.790”OD (1.943”ID) 2000-Up 1
21274A ..... Bearing, AW55-50SN / AW55-51SN Pinion To Bearing #283 (.077” Thick) 2.775”OD (1.935”ID) 2000-Up 1
89277A ..... Use 89279A 1
89279A ..... Cone Bearing, AW55-50SN / AW55-51SN Driven Transfer (30 Rollers) 2.085”ID (.525” Thick) (Cast # NSK R-53-2) 2000-Up (Also Fits AW55-50SN/AW55-51SN Cone Bearing #277 2000-Up) 2
21280A ..... Cup Race, AW55-50SN / AW55-51SN Driven Transfer Gear (Both Sides) 3.467”OD (Cast # NSK R50-31A) 2000-Up 2
21281A ..... Cone Bearing, AW55-50SN / AW55-51SN Driven Transfer Gear (Both Sides) 30 Rollers (2.350”ID) (Cast # NSK R50-31) 2000-Up 2
89282A ..... Inner Race, AW55-50SN / AW55-51SN Pinion Bearing To Bell (1.789”OD) .805” Thick (KOYO 06NU0722C3) 2000-Up 1
89283A ..... Roller Bearing, AW55-50SN / AW55-51SN (Volvo, GM, Saturn) Bell To Underdrive Planet (2.795”OD) .865” Thick (RNU090722) (16 Rollers) 2000-Up 1
21284A ..... Caged Needle Bearing, AW55-50SN / AW55-51SN Rear Cover To 4-5 Planet Shaft (11 Needles) .528” Thick (2.125”OD) (Cast # KOYO RNU060514) (Stays In Rear Cover) 2000-Up 1
21288A ..... Cup Race, AW55-50SN / AW55-51SN Differential Housing To Case (.765” Thick) 3.386”OD (Cast # KOYO ST4286-N or G) 2000-Up 1
21289A ..... Cone Bearing, AW55-50SN / AW55-51SN Differential Housing To CASe (24 Rollers) 2.165”ID (Cast # KOYO ST5586) 2000-Up 1
21290AA ..... Shim, AW55-50SN / AW55-51SN Differential Bearing To Case (Selective) 3.373”OD (2.282”ID) 2000-Up 1
21291A ..... Cup Race, AW55-50SN / AW55-51SN Differential To Bell Housing (3.542”OD) (Cast # KOYO ST5790-9) 2000-Up 1
21292A ..... Cone Bearing, AW55-50SN / AW55-51SN Differential To Bell Housing (27 Rollers) 2.245”ID (Cast # KOYO ST5790) 2000-Up 1
21294A ..... Caged Needle Bearing, AW55-50SN / AW55-51SN Linkage (.925” Long, .708”OD) (Cast # NSK 0C501204) 2000-Up 1

PART #	GASKETS & RUBBER COMPONENTS	QTY	REFERENCE #

21301A ..... Gasket, AW55-50SN / AW55-51SN Pan (9 Bolt) 2000-Up 1
21308A ..... Gasket, AW55-50SN/AW55-51SN Line Pressure Control Accumulator Cover 2000-Up 1
67311B ..... O-Ring, AW55-50SN / AW55-51SN Pump 1
21312A ..... Gasket, AW55-50SN Valve Body Cover 2000-Up 1
21316A ..... Gasket, AW55-50SN/AW55-51SN Lock-Up Relay Valve Cover 2000-Up 1
21320A ..... Gasket, AW55-50SN/AW55-51SN Front Valve Body To Spacer Plate 2000-Up 1
21320AK ..... Gasket Set, AW55-50SN / AW55-51SN Valve Body 2000-Up 1
21321A ..... Gasket, AW55-50SN/AW55-51SN Front Valve Body Spacer Plate To Middle Valve Body 2000-Up 1
21322A ..... Gasket, AW55-50SN/AW55-51SN (Volvo/Renault) Middle Valve Body To Middle Valve Body Spacer Plate 2000-Up 1
21322C ..... Gasket, AW55-50SN/AW55-51SN (All Except Volvo/Renault) Middle Valve Body To Middle Valve Body Spacer Plate 2000-Up 1
21323A ..... Gasket, AW55-50SN/AW55-51SN (Volvo/Renault) Middle Valve Body Spacer Plate To #1 Rear Valve Body 2000-Up 1
21323C ..... Gasket, AW55-50SN/AW55-51SN (All Except Volvo/Renault) Middle Valve Body Spacer Plate To # 1 Rear Valve Body 2000-Up 1
21324A ..... Gasket, AW55-50SN/AW55-51SN #1 Rear Valve Body To #2 Rear Valve Body Spacer Plate 2000-Up 1
21327A ..... Gasket, AW55-50SN/AW55-51SN # 2 Rear Valve Body Spacer Plate To # 2 Rear Valve Body 2000-Up 1
21344A ..... Seal, AW55-50SN / AW55-51SN Case To Rear Cover (.113” Thick) (.590”OD) 2000-Up (Also Valve Body To Case (Takes 2) 2000-Up) 5-7

PART #	TECHNICAL MANUALS	QTY	REFERENCE #

21400A ..... Technical Manual, AW55-50SN 1
21401A ..... Manual On CD, AW55-50SN 1

© Whatever It Takes Transmission Parts. Inc.

PART #	ELECTRICAL COMPONENTS	QTY	REFERENCE #
21410A	Switch, AW55-50SN (Volvo) PRNDL (With Wire Harness With 9 Prong Connector) 2000-Up	1	
21410B	Switch, AW55-51SN (Volvo) PRNDL (With Wire Harness With 7 Prong Connector) 2000-Up	1	
21410C	Switch, AW55-50SN (GM, Saturn) PRNDL (No Wire Harness) (With 9 Prong Connector) 2002-Up	1	
21421A	Solenoid, AW55-50SN 1-2 Shift (S1) (1 Prong Black Connector 5/8" Long) (.800"OD Body) (.750" To .850" Wide Bracket) 2000-Up	1	

PART #	ELECTRICAL COMPONENTS (Continued)	QTY	REFERENCE #
21421B	Solenoid, AW55-51SN 1-2 Shift (S1) (1 Prong Black Connector 5/8" Long) (.800"OD Body) (.550" Wide Bracket) 2000-Up	1	
21422A	Solenoid, AW55-50SN / AW55-51SN 2-3 Shift (S3) (1 Prong Grey/Green Connector 5/8" Long) (.950"OD Body, 1/2 Plastic) (.560" Wide Bracket) 2000-Up	1	
21423A	Solenoid, AW55-50SN / AW55-51SN 3-4 Shift (S2) (1 Prong Grey/Green Conector 5/8" Long) (.950"OD Body, 1/2 Plastic) (.560" Wide Bracket) 2000-Up	1	
21425A	Solenoid, AW55-50SN / AW55-51SN TCC (2 Prong Black Connector 1 1/16" Long) (3 1/2" Long Overall) 2000-Up	1	
S21425A-4	Retainer, AW55-50SN Solenoid Connector (Use On Broken Connectors To Hold Wire Harness On)(Sonnax)	1	
A21425-2AK	Housing Set, AW55-50SN TCC/SLT & SLS Solenoid Can (Contains: 2 Solenoid Housings) (Superior)	1	
21425AK	Solenoid Kit, AW55-50SN (3 Solenoids) Contains: #425 TCC (Or SLU), #428 Line Pressure (Or SLT), #435 Shift Pressure Control (Or SLS) 2000-Up	1	
21428A	Solenoid, AW55-50SN Line Pressure (SLT) (2 Prong Blue Connector 1 1/16" Long) (3 7/8" Long Overall) 2000-Up	1	
21428AK	Solenoid Kit, AW55-50SN (2 Solenoids) Contains: #425 Line Pressure (Or SLT), and #435 Shift Pressure Control (Or SLS) 2000-Up	1	
21428B	Solenoid, AW55-51SN Line Pressure (SLT) (2 Prong Blue Connector 1 1/16" Long) (4" Long Overall) 2000-Up	1	
21430A	Solenoid, AW55-50SN Reverse (S5) (1 Prong Greeen Connector 5/8" Long) (.950"OD Body, 1/2 Plastic) 2000-Up	1	
21430B	Solenoid, AW55-51SN Reverse (S5) (1 Prong Red Connector 5/8" Long) (.808"OD Body, All Metal) 2000-Up	1	
21435A	Solenoid, AW55-50SN Shift Pressure Control (SLS)(2 Prong Green Connector 1 1/16" Long) (3 7/8" Long Overall) 2000-Up (GM/Nissan/Saab/Saturn/Volvo)	1	
21438A	Sensor Set, AW55-50SN (Volvo) Input & Output (With Wire Harness & 4 Wire Connector) 2000-Up	1	
21438B	Sensor Set, AW55-51SN (Volvo) Input & Output (2 Blade Connector) (Wire Harness Is Not Made To Sensors) 2000-Up (Also Fits AW55-50SN (GM, Saturn, Nissan 2000-Up)	2	
21440A	Solenoid, AW55-50SN / AW55-51SN 4-5 Shift (S4) (1 Prong Blue Connector 5/8" Long) (.950"OD Body, 1/2 Plastic) 2000-Up	1	
21446A	Wire Harness, AW55-50SN (Volvo) Internal/External (With 2 Grey External Connectors, One Has 8 Wires And One Has 5 Wires) With Pass Thru Case Connector and Internal Connectors With Temperature Sensor) 2000-Up	1	
21446B	Wire Harness, AW55-51SN (Volvo) Internal/External (With One Brown 7 Wire And One Grey 6 Wire External Connector)(With Pass Thru Case Connector And Internal Connectors With Temperature Sensor) 2000-Up	1	
21446C	Wire Harness, AW55-50SN (GM, Saturn) Intenal (With 13 Prong Case Connector) 2002-Up	1	
21446F	Wire Harness, AW55-50SN (Nissan) Internal/External 2000-Up	1	

PART #	MISCELLANEOUS COMPONENTS	QTY	REFERENCE #
21492A	Drain Plug, AW55-50SN (Hex Head) 2000-Up	1	
21492B	Drain Plug, AW55-51SN (Hex Head) (Can Use 21492A)	1	

PART #	HARD PARTS	QTY	REFERENCE #
89510A	Pump Body, AW55-50SN / AW55-51SN (.422" Thick Gear) (8 Bolt Cast Iron) 2000-Up	1	
21520A	Stator, AW55-50SN / AW55-51SN (Aluminum) (.846"ID Bushing) (Uses A 2 Piece Piston # 962) (Uses A Pressure Plate # 89152A With 12 Spring Guides) 2000-Up	1	
21520A-1	Stator, AW55-50SN / AW55-51SN (Aluminum) (.876"ID Bushing)(Uses A 2 Pice Piston # 962) (Uses A Pressure Plate # 89152A With 12 Spring Guides) 2000-Up	1	
21520AA	Stator, AW55-50SN / AW55-51SN (Aluminum) (Uses A 2 Piece Piston # 962) (Uses A Pressure Plate # 21152B With 8 Spring Guides) 2000-Up	1	
89530A	Pump Gears, AW55-50SN / AW55-51SN (.422" Thick) 2000-Up	1	
21544A	Pump Plate, AW55-50SN / AW55-51SN (.060" Thick) (8 7/16"OD) 2000-Up	1	
21551A	Drum, AW55-50SN / AW55-51SN 4-5 Clutch (With 50 Teeth 1-2 Reverse Sun Gear And 32 Teeth 4-5 Sun Gear)(4 Clutch With 6 Holes In Band Surface) 2000-Up	1	

© Whatever It Takes Transmission Parts. Inc.

21554A ..... Drum, AW55-50SN Forward & Direct Clutch (20 Splines) (7 Lube Holes In Shaft) 2000-Up 1
21554B ..... Drum, AW55-51SN Forward & Direct Clutch (20 Splines) (6 Lube Holes In Shaft) 2000-Up 1
89554B ..... Drum, AW55-50SN Forward & Direct Clutch (20 Splines)(11" Long Shaft)(12 Teeth Steels)(With 8 Lube Holes In Shaft) (.846"OD Of Bushing Lands On Shaft) 1
89554BA ..... Drum, AW55-50SN Forward & Direct Clutch (20 Splines)(11" Long Shaft)(12 Teeth Steels)(With 8 Lube Holes In Shaft)(.876"OD Of Bushing Lands On Shaft) 1
89554BB ..... Drum, AW55-50SN (With 8 Lube Holes In Shaft) Forward & Direct Clutch (12 Teeth Steels) (11" Long Shaft)(2 Splines)(.876"OD Of Bushing Lands On Shaft)(On The Rear Cover Side Of The Drum Is A Laser Weld The Is 3 1/4" Diameter) 1
21561A ..... Piston Kit, AW55-50SN / AW55-51SN 4-5 Clutch 2000-Up 1
21562A ..... Piston Kit, AW55-50SN 2nd Clutch (With 12 Spring Retainer) 2000-Up 1
21562B ..... Piston Kit, AW55-51SN 2nd Clutch (With 8 Spring Retainer) 2000-Up 1
21564A ..... Piston Kit, AW55-50SN Forward & Direct Clutch (Direct Piston Is .505" Thick At The Edge) 2000-Up 1
21564B ..... Piston Kit, AW55-51SN Forward & Direct Clutch (Direct Piston Is .487" Thick At The Edge) 2000-Up 1
21566A ..... Piston Kit, AW55-50SN / AW55-51SN 1-2 Reverse Clutch 2000-Up 1
89567A ..... Piston Kit, AW55-50SN Low/Reverse (1.222" Thick x 6 1/4"OD Piston) 15 Spring Retainer (.775" Thick) (6 5/16"OD Snap Ring) 2000-Up 1
21567B ..... Piston Kit, AW55-51SN Low/Reverse Clutch (1.175" Thick) (6 1/4"OD Piston) 2000-Up 1
21569A ..... Piston Kit, AW55-50SN / AW55-51SN 2nd Coast Clutch (Cast # B1-3) 2000-Up 1
21569AA ..... Piston Kit, AW55-50SN / AW55-51SN 2nd Coast Clutch (Cast # B1-4) 2000-Up 1
21572A ..... Hub, AW55-50SN / AW55-51SN 2nd Coast Clutch (40 Teeth) (2.515"ID) 2000-Up 1
21579A ..... Hub, AW55-50SN With Inner Race (Uses A Metal Washer #211) 2000-Up 1
21579B ..... Hub, AW55-51SN With Inner Race (Uses A Plastic Washer #211) 2000-Up 1
21584A ..... Planet, AW55-50SN (Volvo) Rear (8 Gear Steel) (Uses A 25 Teeth Sun Gear #614) 2000-Up 1
21584B ..... Planet, AW55-51SN (Volvo, GM, Saturn) Rear (8 Gear Steel) (Uses A 27 Teeth Sun Gear #614) 2000-Up 1
21586A ..... Planet, AW55-50SN / AW55-51SN 4-5 (5 Gear) Uses A 32 Teeth Sun Gear (With 9" Long Shaft) 2000-Up 1
21587A ..... Planet, AW55-50SN / AW55-51SN 1-2 Reverse (5 Gear) Uses A 50 Teeth Sun Gear (1.284" Thick) 2000-Up 1
21592A ..... Ring Gear, AW55-50SN (Volvo/GM/Saturn) Rear Planet (83 Teeth) (1.105" Thick) 2000-Up 1
21592B ..... Ring Gear W/Hub, AW55-51SN (Volvo) Rear Planet (85 Teeth) (1.030" Thick) (Comes With 2 Snap Rings #882) 2000-Up 1
21594A ..... Ring Gear, AW55-50SN (Volvo, GM) Rear Planet (2.085" Thick) 33 Lugs (99 Teeth) For Lug Type Sprag 2000-Up 1
21594B ..... Ring Gear, AW55-51SN (Volvo, SAturn) Rear Planet (2.160" Thick) 33 Lugs (87 Teeth) For Roller Sprag 2000-Up 1
21596A ..... Ring Gear, AW55-50SN / AW55-51SN 4-5 Planet (67 Teeth) (1.198" Thick) 2000-Up 1
21597A ..... Ring Gear, AW55-50SN 1-2 Reverse Planet (82 Teeth) .120" Deep Pocket Where Bearing #248 Rides 2000-Up 1
21597B ..... Ring Gear, AW55-51SN 1-2 Reverse Planet (82 Teeth) .150" Deep Pocket Where Bearing #248 Rides 2000-Up 1
21602A ..... Hub, AW55-50SN Rear Planet Ring Gear (83 Teeth) 1.900"ID (4 Holes) 2000-Up 1
89604A ..... Ring Gear Hub, AW55-50SN (99 Teeth) (4.740"ID) 2000-Up 1
21604B ..... Ring Gear Hub, AW55-51SN (87 Teeth) (1.880"ID) 2000-Up 1
21612A ..... Sun Gear, AW55-50SN With Direct Clutch Hub (37 Teeth) (28 Spline Hub) (2.055" Tall) (.850"ID Of Bushing) 2000-Up 1
21612AA ..... Sun Gear, AW55-50SN With Direct Clutch HUb (37 Teeth) (28 Spline Hub) (2.055" Tall) (.876"ID Of Bushing) 2000-Up 1
21614A ..... Sun Gear, AW55-50SN Rear (25 Teeth) (4 1/2" Long) (.850"ID Of Bushing) 2000-Up 1
21614AA ..... Sun Gear, AW55-50SN Rear (25 Teeth) (4 1/2" Long) (.876"ID Of Bushing) 2000-Up 1
21614B ..... Sun Gear, AW55-51SN Rear (27 Teeth) (6 3/4" Long With Sun Gear And Hub # 612) 2000-Up 1

PART #	SPRAGS & ONE WAY CLUTCHES	QTY	REFERENCE #

89652 ..... Sprag, AW55-50SN / AW55-51SN 2nd Sprag (18 Elements) (.525" Thick) 2000-Up (Can Use 97652) 1
97652 ..... One Way Clutch, AW55-50SN/AW55-51SN 2nd Sprag 1
21654A ..... Use 67654A 1
67654A ..... Sprag, AW55-50SN Low Sprag (20 Elements)(4.810"OD) 1
21654B ..... Sprag, AW55-51SN Low (20 Elements) (Plastic Cage) 2000-Up 1
21654C ..... Sprag, AW55-51SN (Low)(15 Rollers) 2001-Up 1
21664A ..... Inner Race, AW55-50SN (Volvo, GM) Low Sprag (Lug Type Sprag) 2000-Up 1
21664B ..... Inner Race, AW55-50SN / AW55-51SN (Volvo, Saturn) Low Sprag (Roller Type Sprag) 2000-Up 1

© Whatever It Takes Transmission Parts. Inc.

PART #	HARD PARTS (Continued)	QTY	REFERENCE #
21690A	Parking Gear, AW55-50SN / AW55-51SN (18 Lugs) .513" Thick Lugs (4.883"OD) 2000-Up	1	
21696A	Crush Sleeve, AW55-50SN / AW55-51SN (.485" Thick) 2.675"OD (2.395"ID) 2000-Up	1	
89696B	Crush Sleeve, AW55-50SN / AW55-51SN Drive Transfer Bearings (2.108"ID) (.480" Thick) 2000-Up	1	

PART #	HARDPARTS (Continued)	QTY	REFERENCE #
21698A	Oil Deflector, AW55-50SN / AW55-51SN (Volvo) Differential (4 Bolt) (Goes In The Bell Housing) (2 5/8" Tall) (Bottom Bolt Is Flush On Lip) 2000-Up	1	
21698C	Oil Deflector, AW55-50SN (GM) Differential (4 Bolt) (Goes In Bell Housing) (3 1/2" Tall) 2005-Up	1	
21698D	Oil Deflector, AW55-50SN (Saturn) Differential (4 Bolt) (Goes In Bell Housing) (2 5/8" Tall) (Bottom Bolt Is Countersunk In Lip)	1	
21699A	Oil Deflector, AW55-50SN / AW55-51SN (Volvo) Differential (2 Bolt) (Goes In Case) 2000-Up	1	
21699C	Oil Deflector, AW55-50SN (GM, Saturn) Differential (3 Bolt) (Goes In Case) 2002-Up	1	
21710A	Gear, AW55-50SN / AW55-51SN Drive Transfer (56 Teeth, 3 Groove) (.790" Thick 2.315" Tall) (20 Splines) 2000-Up	1	
89711A	Sleeve, AW55-50SN / AW55-51SN Drive Transfer Bearing Retainer (3.928"OD) (1.551" Thick) 2000-Up	1	
21712A	Gear, AW55-50SN / AW55-51SN (Volvo, Saturn) Driven Transfer (57 Teeth, 4 Grooves) (6 1/4"OD) 2000-Up	1	
21712C	Gear, AW55-50SN (GM) Driven Transfer (57 Teeth, 4 Grooves) 2005-Up	1	
21715A	Differential W/Ring Gear, AW55-50SN (Volvo) (61 Teeth, 1 Groove) 12 Bolt (24 Roller Bearing On Ring Gear Side And 27 Roller Bearing On Bell Housing Side) (Housing Is 7 1/8" Tall With 4 Windows) 2000-Up	1	
21715B	Differential W/Ring Gear, AW55-51SN (Volvo) (59 Teeth, 2 Groove) 12 Bolt (24 Roller Bearing On Ring Gear Side And 27 Roller Bearing On Bell Housing Side) 2000-Up	1	
21715C	Differential W/Ring Gear, AW55-50SN (GM) (61 Teeth, 5 Groove) 12 Bolt (24 Roller Bearing On Ring Gear Side & 27 Roller Bearing On Bell Housing Side) (Housing Is 5 1/4" Tall With 4 Windows) 2005-Up	1	
21715D	Differential W/Ring Gear, AW55-50SN (Saturn) (61 Teeth, 3 Groove) 12 Bolt (24 Roller Bearing On Ring Gear Side & 27 Roller Bearing On Bell Housing Side) (Housing Is 8 1/4" Tall With 2 Windows) (AWD) 2002-Up	1	
21716A	Differential Housing, AW55-50SN / AW55-51SN (Volvo) (12 Bolt) 7 1/8" Tall (24 Roller Bearing On Ring Gear Side And 27 Roller Bearing On Differential Housing Side) (With 4 Windows) 2000-Up	1	
21716C	Differential Housing, AW55-50SN (GM) 12 Bolt (5 1/4" Tall) (24 Roller Bearing On Ring Gear Side & 27 Roller Bearing On Differential Housing Side) (With 4 Windows) 2005-Up	1	
21716D	Differential Housing, AW55-50SN (Saturn) 12 Bolt (8 1/2" Tall) AWD (24 Roller Bearing On Ring Gear Side & 27 Roller Bearing On Differential Side) (With 2 Windows) 2002-Up	1	
21720A	Ring Gear, AW55-50SN Differential (61 Teeth, 1 Groove) (12 Bolt) 2000-Up	1	
21720B	Ring Gear, AW55-51SN Differential (59 Teeth, 2 Groove) (12 Bolt) 2000-Up	1	
21730A	Pinion Gear, AW55-50SN (25 Teeth, 1 Groove) 1.590" Thick (3.670"OD) 2000-Up	1	
21730B	Pinion Gear, AW55-51SN (26 Teeth, 2 Groove) 1.590" Thick (3.835"OD) 2000-Up	1	
21740A	Valve Body, AW55-50SN (Volvo Early)(No Letter Code)(Cast # 9165) 2000-Up	1	
21740A-1	Valve Body, AW55-50SN (Volvo & Nissan Early)(Cast Letter A)(Cast # 9167) 2000-Up	1	
21740AA	Valve Body, AW55-50SN (Volvo & Nissan, Late) (Cast Letter B Or C)(Cast # 9168) 2004 Only	1	
21740C	Valve Body, AW55-50SN (GM/Saturn/Saab, Late)(Cast Letter B Or C)(Cast # 9168)	1	
21740CA	Valve Body, AW55-50SN (GM/Saturn/Saab, Early)(Cast Letter A Or No Letter Code) (Cast # 9167)	1	
21740CC	Valve Body, AW55-50SN (GM/Saturn/Saab Late)(With B5 Spring)(VBX)	1	
21740F	Valve Body, AW55-50SN (Nissan)(Cast Letter B Or C)(Cast # 9168) 2005-Up	1	

PART #	VALVE BODY COMPONENTS	QTY	REFERENCE #
S21741ACK	Valve & Sleeve Kit, AW55-50SN Lock-Up Relay Control (Sonnax)	1	
S21741ADK	Valve & Sleeve Kit, AW55-50SN Solenoid Relay (Sonnax)	1	
S21741CAK	Valve & Spring Kit, AW55-50SN/AW55-51SN Secondary Regulator Valve (Sonnax)(Must Use Tool #T-F-59947-TL16)	1	
T-F-59947-TL16	Tool For S21741CAK	1	
S21741CCK	Valve & Sleeve Kit, AW55-50SN Lock-Up Control (Sonnax)	1	
S21741CCOK	Valve & Sleeve Kit, AW55-50SN Lock-Up Control (Oversized) (Must Use T-F-97741-TL20 & T-VB-Fix)(Sonnax)	1	
T-F-97741-TL20	Tool Kit For S21741CCOK	1	
S21741CDK	Valve & Sleeve Kit, AW55-50SN/AW55-51SN Oversized Lock-Up Control Valve W/Boost Valve, Spring & Sleeve (Sonnax)(Must Use Tool T-F-59947-TL29)	1	
T-F-59947-TL29	Tool For S21741CDK	1	

© Whatever It Takes Transmission Parts. Inc.

S21741DDK....Valve & Sleeve Kit, AW55-50SN Solenoid Modulator Valve Capsule Kit (Contains: Valve, Sleeve, & Spring)(Sonnax)(Must Use T-F-59947-TL34 & T-VB-FIX) 1
S21741FK.....Valve Assembly, AW55-50SN/AW55-51SN Oversized Neutral Valve, Spring & End Plug) (Sonnax)(Must Use Tool T-F-59947-TL34) 1
T-F-59947-TL34 Tool For S21741DDK & S21741FK (Contains: Reamer, Jig & Guide) 1
S21741H-1K...Valve Kit, AW55-50SN B4 Release (Contains: Valve, Spring, End Plug & O-Rings)(Sonnax) (Must Use T-F-59947-TL26) 1
T-F-59947-TL26 Tool For S21741H-1K 1
S21741LK.....Piston Kit, AW55-50SN/AW55-51SN Line Pressure Control Accumulator (Sonnax) (Contains: Piston, 2 O-Rings & 2 Springs) 1

S21741PK .....Valve & Sleeve Assembly, AW55-50SN Oversized Pressure Regulator Valve & Spring With Main Boost Valve & Sleeve)(Sonnax)(Must Use /tool # T-F-59947-TL12) 1
T-F-59947-TL12 Tool, Used With S21741PK 1
S21741Q-6K...End Plug Kit, AW55-50SN/AW55-51SN (Sonnax)(Contains: Four 9mm End Plugs, One 11mm End Plug, 6 Small O-Rings & 2 Large O-Rings) 1
S21741RK .....Valve & Sleeve Kit, AW55-50SN Main Boost (Sonnax) 1
S21741SK .....Valve Kit, AW55-50SN/AW55-51SN Shift Pressure Control (Contains Valve & Sleeve)(Sonnax) (Also Fits AF 23/33 & RE5F22A 1
S21741SPK....Valve Kit, AW55-50SN/AW55-51SN Shift Pressure Control Plunger Valve (Contains Valve & Sleeve)(Sonnax) 1

PART #	HARDPARTS (Continued)	QTY	REFERENCE #

21746A .....Cover, AW55-50SN / AW55-51SN Valve Body (2 Bolt, Aluminum) Cast #35475-50A010 2000-Up 1
21750A .....Bell Housing, AW55-50SN (Volvo) (5” Top Bolts) 2.958”OD Axle Seal (4 1/2” Thick) With 8 Threaded Holes Around Axle Seal (Cast # 9165) (Starter At 2:00) 2000-Up 1
21750B .....Bell Housing, AW55-51SN (Volvo) (3” Top Bolts) 2.480”OD Axle Seal (4 7/8” Thick) Uses An External Oil Cooler, Does Not Have Any Threaded Bosses For Cooler Lines To Radiator) (Cast # 9193 In Converter Area At 11:00) 2000-Up 1
21740BA.....Bell Housing, AW55-51SN (Volvo)(5” Top Bolts)(2.958”OD Axle Seal)(4 7/8”Thick)(Does Not Use An External Cooler, Has 2 Threaded Bosses For Cooler Lines To Radiator)(Cast # 9193 In Converter Area At 11:00) 2000-Up 1
21750C .....Bell Housing, AW55-50SN (GM) (5” Top Bolts) (2.145”OD Axle Seal)(4 11/16” Thick) (With 4 Threaded Holes Around Axle Seal) (Cast # 9191) (Starter At 3:00) 2005-Up 1
21750D .....Bell Housing, AW55-50SN (Saturn) (5” Top Bolts) (2.400”OD Axle Seal) 5” Thick (With 6 Threaded Holes Around Axle Seal) (Cast # 9194) (Starter At 4:00) 2002-Up 1
21759A .....Rear Cover, AW55-50SN (Volvo, GM, Saturn)(12 Bolt) (With .735”OD Bearing #223)(No Threaded Bosses At 12:00) 2000-Up (Can Use 21759AA) 1
21759AA.....Rear Cover, AW55-50SN (Volvo/GM Saturn) (12 Bolt, With .735”OD Bearing # 223)(With 3 Threaded Bosses At 12:00) 2000-Up 1
21759B .....Rear Cover, AW55-51SN (Volvo) (12 Bolt) (With .835”OD Bearing #223) (With 3 Threaded Bosses At 12:00) 2000-Up 1
21759BA.....Rear Cover, AW55-51SN (Volvo)(12 Bolt)(With .835”OD Bearing #223)(No Threaded Bosses At 12:00) 2000-Up (Can Use 21759B) 1
21759BB.....Rear Cover, AW55-51SN (Volvo)(13 Bolt)(With .835”OD Bearing # 233)(With 3 Threaded Bosses At 12:00) 2000-Up 1
21759BBA.....Rear Cover, AW55-51SN (Volvo)(13 Bolt)(With .835”OD Bearing #223)(With 3 Threaded Bosses Across The Bottom) 2000-Up 1
21760A .....Case, AW55-50SN (Volvo) (Black Tag) (With 3 Threaded Bosses Above Axle Seal And 1 Big Boss On Linkage Side) 2000-Up 1
21760B .....Case, AW55-51SN (Nissan/Volvo) (Red Tag)(12 Bolt Rear Cover) 2000-Up (These Cases Are Sleeved) 1
21760BA.....Case, AW55-51SN (Nissan/Volvo) (Red Tag)(Cast # 9193)(12 Bolt Rear Cover) 2000-Up (These Cases Are Sleeved) 1
21760BB.....Case, AW55-51SN (Nissan/Volvo) (Red Tag)(13 Bolt Rear Cover) 2000-Up (These Cases Are Sleeved) 1
21760BC.....Case, AW55-51SN (Volvo)(Black Tag)(With 3 Threaded Bosses Above Axle Seal) (VR Casted Above Servo)(These Cases Are Sleeved) 1
21760C .....Case, AW55-50SN (GM) (Brown Tag) (No Bosses Above Axle SealAnd 3 Big Bosses On Linkage Side) (All The Same Height) 2005-Up 1
21760D .....Case, AW55-50SN (Saturn) (Tan Tag) (No Bosses Above Axle Seal And Big Bosses On Linkage Side)(1 Boss Is Taller) 2002-Up 1
21760E .....Case, AW55-51SN (Saab) (Yellow Tag) 2002-Up (These Cases Are Sleeved) 1
21766A .....Pan, AW55-50SN (Volvo) Side (9 Bolt) (With Screw In Vent Fitting) 2000-Up 1
21766B .....Pan, AW55-51SN (Volvo) Side (9 Bolt) (With Welded On Vent Tube) 2000-Up 1
21766C .....Pan, AW55-50SN (GM) Side (9 Bolt No Vent) 2005-Up 1
21776AK.....Bolt Set, AW55-50SN / AW55-51SN Bell Housing To Case (17 Pieces) 2000-Up 1
21777AK.....Bolt Set, AW55-50SN / AW55-51SN Pump To Case 2000-Up 1

© Whatever It Takes Transmission Parts. Inc.

PART #	HARDPARTS (Continued)	QTY	REFERENCE #
21778AK	Bolt Set, AW55-50SN / AW55-51SN Pump Stator To Body 2000-Up	1	
21780AK	Bolt Set, AW55-50SN / AW55-51SN Rear Cover To Case (13 Pieces) 2000-Up	1	
21782AK	Bolt Set, AW55-50SN / AW55-51SN Valve Body To Case (9 Pieces) 2000-Up	1	
21786AK	Bolt Set, AW55-50SN / AW55-51SN Differential Ring Gear To Housing (12 Pieces) 2000-Up	1	
21788AK	Bolt Set, AW55-50SN / AW55-51SN Side Pan (9 Pieces) 2000-Up	1	
21789B	Bolt, AW55-51SN Holds Oil Cooler To Bell Housing 2000-Up	1	
89795A	Nut, AW55-50SN / AW55-51SN Drive Transfer (2.375” At Flats) Right Hand Threads (2.000”ID) 2000-Up	1	
21796A	Nut, AW55-50SN / AW55-51SN Holds Pinion To 4-5 Planet Sahft (.965”ID) 2000-Up	1	
21854A	Cushion, AW55-50SN / AW55-51SN 1-2 Reverse Clutch (.041” Thick) 4.985”ID (5.630”OD) 2000-Up	1	
21858A	Cushion, AW55-50SN Direct Clutch (.032”) 4 Teeth, Dished (3.600”ID) 2000-Up	1	
21858B	Cushion, AW55-51SN Direct Clutch (.062”)(8 Teeth Dished)(3.600”ID) 2000-Up	1	
21864A	Snap Ring, AW55-50SN / AW55-51SN Holds 4-5 Clutch Pressure Plate In Drum (.078”Thick) (4.840”OD) 2000-Up	1	
21865A	Snap Ring, AW55-50SN / AW55-51SN Holds 4-5 Clutch Return Springs In Drum (.070” Thick) (2.135”OD) 2000-Up	1	
21868A	Snap Ring, AW55-50SN / AW55-51SN Holds 4-5 Planet Ring Gear To Driven Transfer Gear (.079”Thick) (4.775”OD) (With Bent Ends) 2000-Up	1	
21869A	Snap Ring, AW55-50SN / AW55-51SN Holds Driven Transfer Gear Cup Races Apart (.070” Thick) (3.660”OD) 2000-Up	1	
89870A	Snap Ring, AW55-50SN / AW55-51SN 2nd Coast Clutch And Direct Clutch #878 (4 9/16”OD) (.079” Thick) 2000-Up	1-2	
89871A	Snap Ring, AW55-50SN / AW55-51SN 2nd Coast Clutch (.040” Thick) (2.025”OD) 2000-Up	1	
89873A	Snap Ring, AW55-50SN / AW55-51SN Holds 2nd Brake Clutch Pressure Plate In (.062” Thick) (6 5/8”OD) 2000-Up	1	
21874A	Snap Ring, AW55-50SN / AW55-51SN Holds 2nd Clutch Piston Insert In Stator (.055” Thick) 4.775”OD (With Holes In Each End) 2000-Up	1	
21876A	Snap Ring, AW55-50SN / AW55-51SN Holds Forward Clutch Pressure Plate In Drum (.063” Thick) 5.850”OD (4.490”ID) 2000-Up	1	
21878A	Use 89870A.	1	
89879A	Snap Ring, AW55-50SN / AW55-51SN Forward & Direct Clutch Retainer (.040” Thick) (2.030”OD) 2000-Up	1	
21882A	Snap Ring, AW55-50SN Holds Hub To Ring Gear (.054” Thick) (4.010”OD) 2000-Up	1	
89883A	Snap Ring, AW55-50SN / AW55-51SN Retainer To Case (.080” Thick) (3.548”OD) 2000-Up	1	
89884A	Snap Ring, AW55-50SN / AW55-51SN Low/Reverse Retainer (6 5/8”OD) (.047” Thick) 2000-Up	1	
21885A	Snap Ring, AW55-50SN / AW55-51SN Holds Low/Reverse Clutch Pressure Plate In Case (.063” Thick) (6 9/16”OD) 2000-Up	1	
21886A	Snap Ring, AW55-50SN Holds Low Sprag To Ring Gear (.039” Thick) (5.100”OD) 2000-Up	1	
21888A	Snap Ring, AW55-50SN Holds Sun Gear From Going Into The Planet Too Far (.057” Thick) (1.332”OD) 2000-Up	1	
89889A	Snap Ring, AW55-50SN / AW55-51SN Rear Hub To Ring Gear (.055” Thick) 5 1/4”OD (2 Holes In Ends) 2000-Up	1	
21892A	Snap Ring, AW55-50SN / AW55-51SN Holds 1-2 Reverse Clutch Pressure Plate In (.099” Thick) (5.900”OD) 2000-Up	1	
21893A	Snap Ring, AW55-50SN / AW55-51SN holds 1-2 Reverse Clutch Spring Retainer (.030” Thick) (2.808”OD) 2000-Up	1	
21905A	Servo Assembly, AW55-50SN 3rd Gear Band (With A 7/8” Thick Cover) (With 2 Stripe Pin) 2000-Up	1	
21905AA	Servo Assembly, AW55-50SN 3rd Gear Band (With A 7/8” Thick Cover)(With 1 Stripe Pin) 2000-Up	1	
21905B	Servo Assembly, AW55-51SN 3rd Gear Band (With A 2 1/2” Thick Cover) (With 1 Stripe Pin) 2000-Up	1	
21909AK	Cover Assembly, AW55-50SN 3rd Gear Band Servo (7/8” Thick)(Contains: Cover, Snap Ring #896, And Three O-Rings) 2000-Up	1	
21916A	Band Anchor, AW55-50SN / AW55-51SN 3rd Gear (With 5 Sided Head) 2000-Up	1	
21930A	Accumulator Assembly, AW55-50SN / AW55-51SN Forward & Direct Clutch (Piston Is .800”OD) 2000-Up	1	
21961A	Piston, AW55-50SN / AW55-51SN 4-5 Clutch (.475” Thick At The Edge) (4.500”OD) (1.970”ID) With Check Ball & 18 Spring Pockets 2000-Up	1	
21962A	Piston, AW55-50SN / AW55-51SN 2nd Clutch (Aluminum) .492” Thick (5.590”ID) 6 1/4”OD (No Inner O-Ring Groove) 2000-Up	1	
21962AA	Piston Insert, AW55-50SN / AW55-51SN 2nd Clutch (.315” Thick) 4.855”ID (5.580”OD) 2000-Up	1	

© Whatever It Takes Transmission Parts. Inc.

21962AB.....Piston Insert, AW55-50SN / AW55-51SN 2nd Clutch (.310" Thick) 4.895"ID (5.580"OD) 2000-Up 1
21964A.....Piston, AW55-50SN Forward Clutch (1.850" Thick At Edge) (With 2 Check Balls) 2000-Up 1
21964B.....Piston, AW55-51SN Forward Clutch (1.790" Thick At Edge) (With 2 Check Balls) 2000-Up 1
21965A.....Piston, AW55-50SN Direct Clutch (Aluminum) .505" Thick At Edge (With Check Ball, 16 Spring Pockets) 2000-Up 1
21965B.....Piston, AW55-51SN Direct Clutch (Aluminum) .487" Thick At Edge (With Check Ball, 16 Spring Pockets) 2000-Up 1
21966A.....Piston, AW55-50SN / AW55-51SN 1-2 Reverse Clutch (.425" Thick At The Edge) 2.725"ID (5.505"OD) (With 22 Spring Pockets) 2000-Up 1
89967A.....Piston, AW55-50SN Low/Reverse Clutch (1.222" Thick) (6 1/4"OD) 2000-Up 1
21967B.....Piston, AW55-51SN Low/Reverse Clutch (1.175" Thick) (6 1/4"OD) 2000-Up 1
21969A.....Piston, AW55-50SN / AW55-51SN 2nd Coast Clutch (Aluminum) (.500" Thick) 2.035"ID (4.240"OD) (With 15 Spring Pockets) 2000-Up 1
21976A.....Spring W/Retainer, AW55-50SN / AW55-51SN 1-2 Reverse Clutch Return (22 Springs) 2.680"ID (3.988"OD) 2000-Up 1
21981A.....Spring W/Retainer, AW55-50SN / AW55-51SN 4-5 Clutch Return (18 Springs) .792" Thick (3.105"OD) 1.930"ID 2000-Up 1
89982A.....Retainer W/Springs, AW55-50SN 2nd Brake Clutch (12 Springs) 4.875"ID (5.800"OD) 2000-Up 1
21982B.....Retainer W/Springs, AW55-51SN 2nd Clutch (8 Springs) 4.875"ID (5.800"OD) 2000-Up 1
89985A.....Springs W/Retainer, AW55-50SN / AW55-51SN Forward & Direct Clutch Return (16 Springs) .950" Thick (3.125"OD) 1.840"ID 2000-Up 1
89987A.....Retainer W/Springs, AW55-50SN / AW55-51SN Low/Reverse Clutch (.775" Thick) 6 5/16"OD (15 Springs) 2000-Up 1
89989A.....Retainer W/Springs, AW55-50SN / AW55-51SN 2nd Coast Clutch (15 Springs) 1.840"ID (3.140"OD) 2000-Up 1
21991A.....Linkage Assembly, AW55-50SN / AW55-51SN (Internal) (5 Pieces) 2000-Up 1
21995A.....Park Pawl Assembly, AW55-50SN / AW55-51SN (6 Pieces) 2000-Up 1
21998B.....Oil Cooler, AW55-51SN External (1 Bolt) (3 7/8"OD) 2000-Up 1
265998-1A.....External Cooler Adapter, AW55-51SN (Used To Replace The OE Cooler & Put On An Aftermarket External Cooler) 1
21999A.....Oil Tube Set, AW55-50SN / AW55-51SN (3 Pieces) 2000-Up 1

© Whatever It Takes Transmission Parts. Inc.

HONDA

000 P&R Kit
002 OHK Kit
004 Master L/Steels Kit
006 Master W/Steels Kit
175 Ring Kit
400 Tech Manual

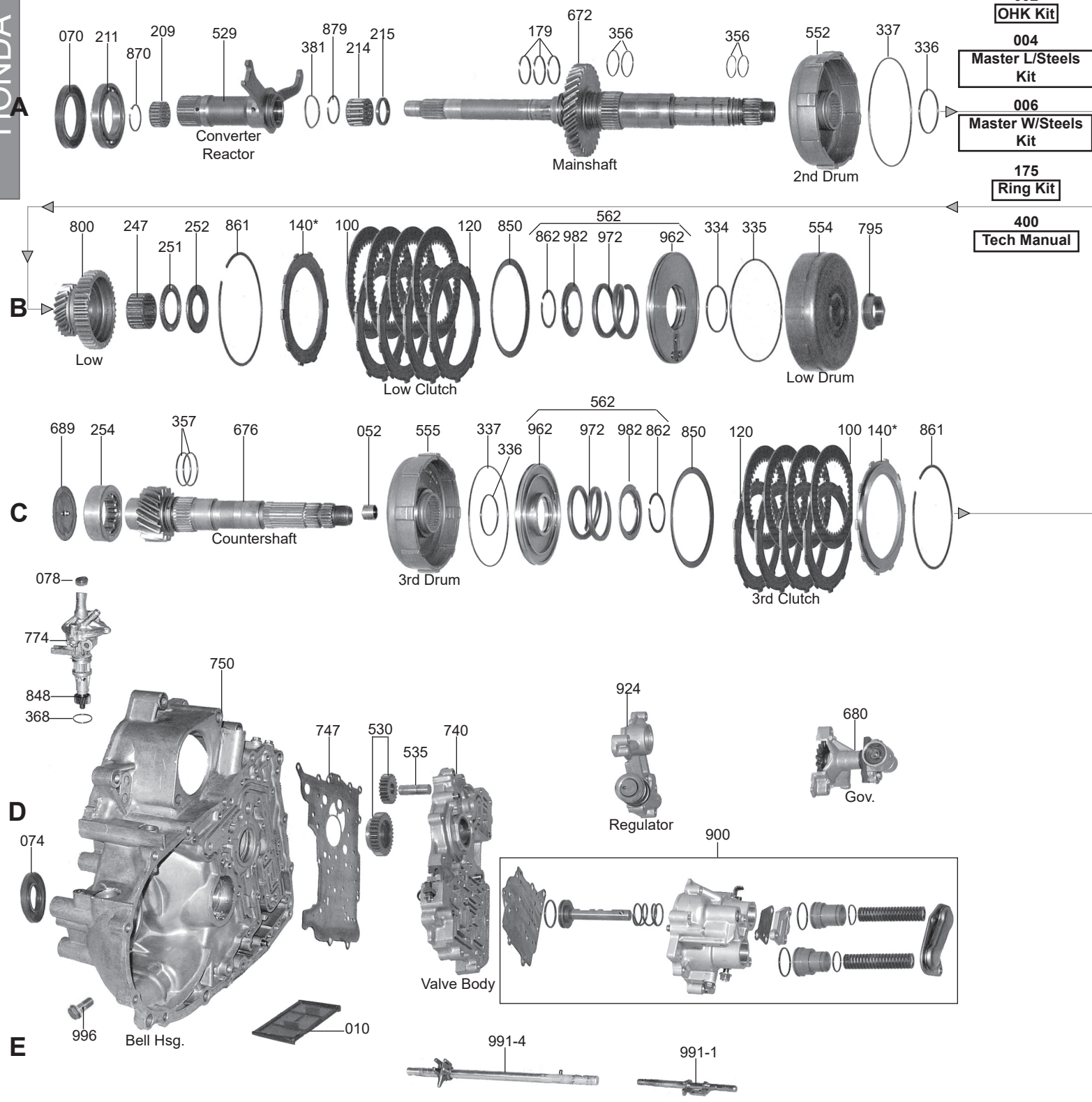

© Whatever It Takes Transmission Parts. Inc.

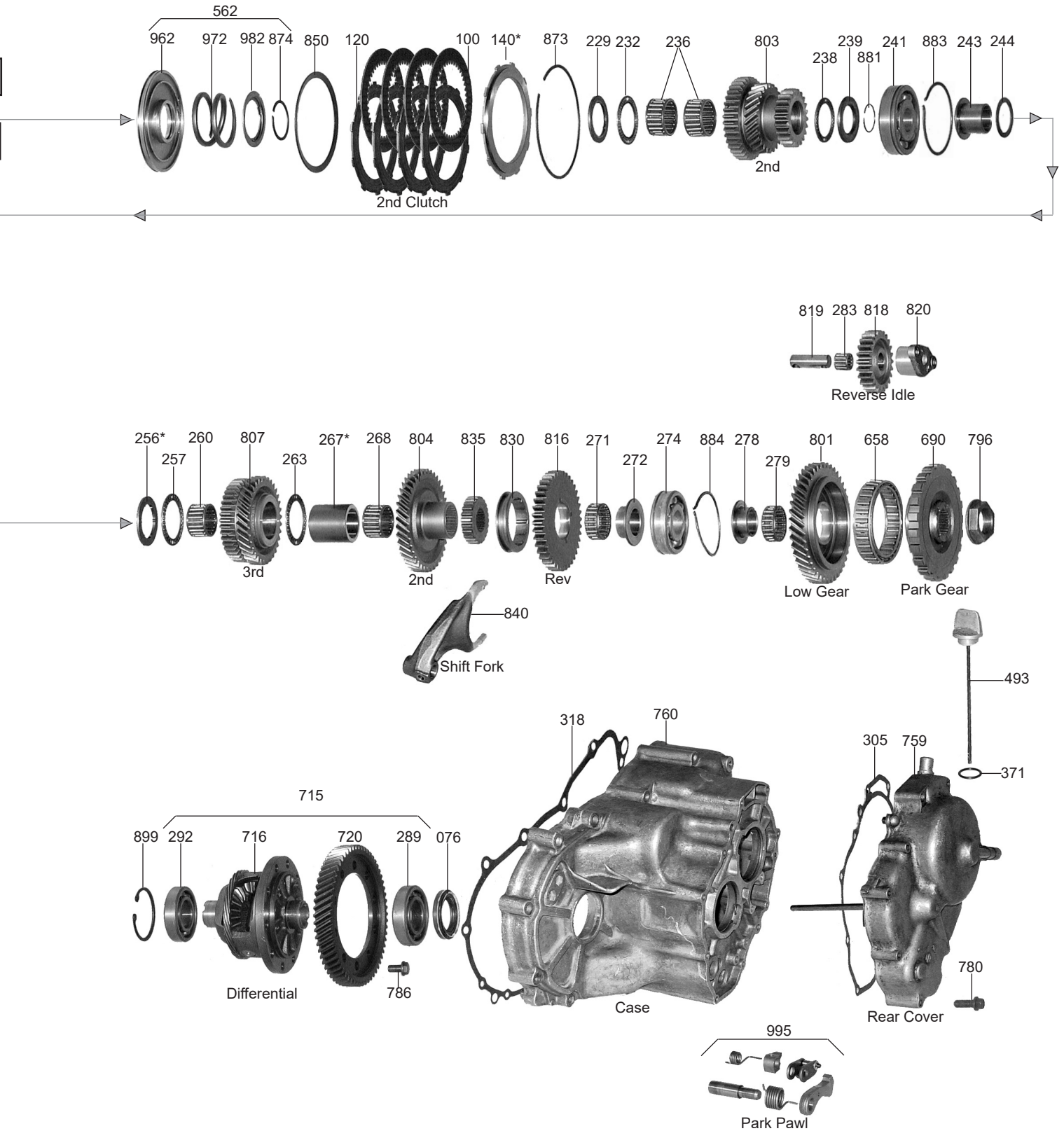

1-800-940-0197

© Whatever It Takes Transmission Parts. Inc.

PART #	PAPER & RUBBER KIT	QTY.	REFERENCE #
150000	Paper & Rubber Kit, Honda 3 Speed 1980-86	1	

PART #	OVERHAUL KITS	QTY.	REFERENCE #
150002	Overhaul Kit, Honda 3 Speed 1980-86	1	

PART #	MASTER L/STEEL KIT	QTY.	REFERENCE #
150004	Master L/Steels Kit, Honda 3 Speed 1980-86	1	

PART #	MASTER W/STEEL KIT	QTY.	REFERENCE #
150006	Master W/Steels Kit, Honda 3 Speed 1980-86	1	

PART #	FILTER	QTY.	REFERENCE #
150010	Filter, Honda 3 Speed 1980-86	1	25420-PA9-000

PART #	METAL CLAD SEALS	QTY.	REFERENCE #
60070A	Seal, Honda 3 Speed (Front)	1	91307-639-015
60072	Seal, Honda 3 Speed Linkage	1	90311-12002
60072AA	Seal, Honda 3 Speed Throttle Rod	1	91201-PA9-003
150074	Seal, Honda 3 Speed (Left Axle)	1	91205-639-005
150076	Seal, Honda 3 Speed (Right Axle)	1	91206-639-005
150078	Seal, Honda 3 Speed Speed-O Gear	1	91208-551-015

PART #	FRICTION CLUTCH	QTY.	REFERENCE #
60100A	Friction, Honda 3 Speed Low, 2nd, & 3rd Clutch (.075") 38 Teeth (106mm, 4.171"OD)	3-9	22544-PA9-010

PART #	STEEL CLUTCH	QTY.	REFERENCE #
60120A	Steel, Honda 3 Speed Low, 2nd, & 3rd Clutch (.079") 8 Teeth (3.220"ID)	3-9	22543-PA9-010
60120AA	Steel, Honda 3 Speed Low, 2nd, & 3rd Clutch (.070") 8 Teeth (3.220"ID)	AR	

PART #	CLUTCH PRESSURE PLATES	QTY.	REFERENCE #
60140A-1	Pressure Plate, Honda 3 Speed Low, 2nd, & 3rd Clutch (Stamped #1) 8 Teeth (3.220"ID)	1-4	
60140A-2	Pressure Plate, Honda 3 Speed Low, 2nd, & 3rd Clutch (Stamped #2) 8 Teeth (3.220"ID)	1-4	
60140A-3	Pressure Plate, Honda 3 Speed Low, 2nd, & 3rd Clutch (Stamped #3) 8 Teeth (3.220"ID)	1-4	
60140A-4	Pressure Plate, Honda 3 Speed Low, 2nd, & 3rd Clutch (Stamped #4) 8 Teeth (3.220"ID)	1-4	
60140A-5	Pressure Plate, Honda 3 Speed Low, 2nd, & 3rd Clutch (Stamped #5) 8 Teeth (3.220"ID)	1-4	
60140A-6	Pressure Plate, Honda 3 Speed Low, 2nd, & 3rd Clutch (Stamped #6) 8 Teeth (3.220"ID)	1-4	
60140A-7	Pressure Plate, Honda 3 Speed Low, 2nd, & 3rd Clutch (Stamped #7) 8 Teeth (3.220"ID)	1-4	
60140A-8	Pressure Plate, Honda 3 Speed Low, 2nd, & 3rd Clutch (Stamped #8) 8 Teeth (3.220"ID)	1-4	
60140A-9	Pressure Plate, Honda 3 Speed Low, 2nd, & 3rd Clutch (Stamped #9) 8 Teeth (3.220"ID)	1-4	
60140A-10	Pressure Plate, Honda 3 Speed Low, 2nd, & 3rd Clutch (Stamped #10) 8 Teeth (3.220"ID)	1-4	

PART #	OIL SEALING RINGS	QTY.	REFERENCE #
150175	Ring Kit, Honda 3 Speed	1	
60179A	Ring, Honda 3 Speed Mainshaft (1.259"OD)	2-3	22814-PA9-023

PART #	GASKETS & RUBBER COMPONENTS	QTY.	REFERENCE #
60313A	O-Ring, Honda Converter (OE Upgraded)(Fits On ConverterHub, Inside Of Drive Pump Gear)	1	83-HDA3SPDTM

PART #	TECHNICAL MANUALS	QTY.	REFERENCE #
150400	Technical Manual, Honda 3 Speed	1	83-HDA3SPDTM

PART #	HARDPARTS	QTY.	REFERENCE #
60658A	Sprag, Honda 3 Speed Low (26 Lugs)	1	
150816	Gear, Honda 3 Speed Reverse (Countershaft)	1	23531-PA9-000

© Whatever It Takes Transmission Parts. Inc.

Technical Bulletin #075

Transmission: *All*
Subject: *Correct clutch pack cushions & proper installations*
Application: *Honda, Acura*
Issue Date: *August, 2000*

All

Correct Clutch Pack Cushions & Proper Installations

Another common source of after-rebuild failures has to do with clutch cushions. These cusions are easy to install incorrectly, or swap from one clutch pack to another.

These clutch cushions are specifically matched to the clutch pack they belong in. Any mistake in installation can cause a harsh apply, or can burn up a clutch pack, due to reduced clutch clearance.

Use the charts to identify the type of clutch cushion each clutch pack uses, and use the pictures to identify the proper way to install those cushions.



One way to help prevent comebacks is to make sure you have the clutch cushions installed properly

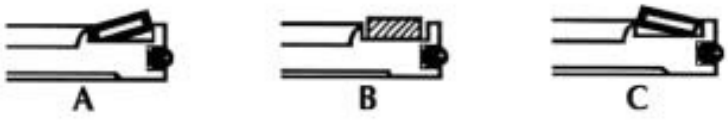

Copyright © 2003 ATRA. All Rights Reserved.

© Whatever It Takes Transmission Parts. Inc.

HONDA

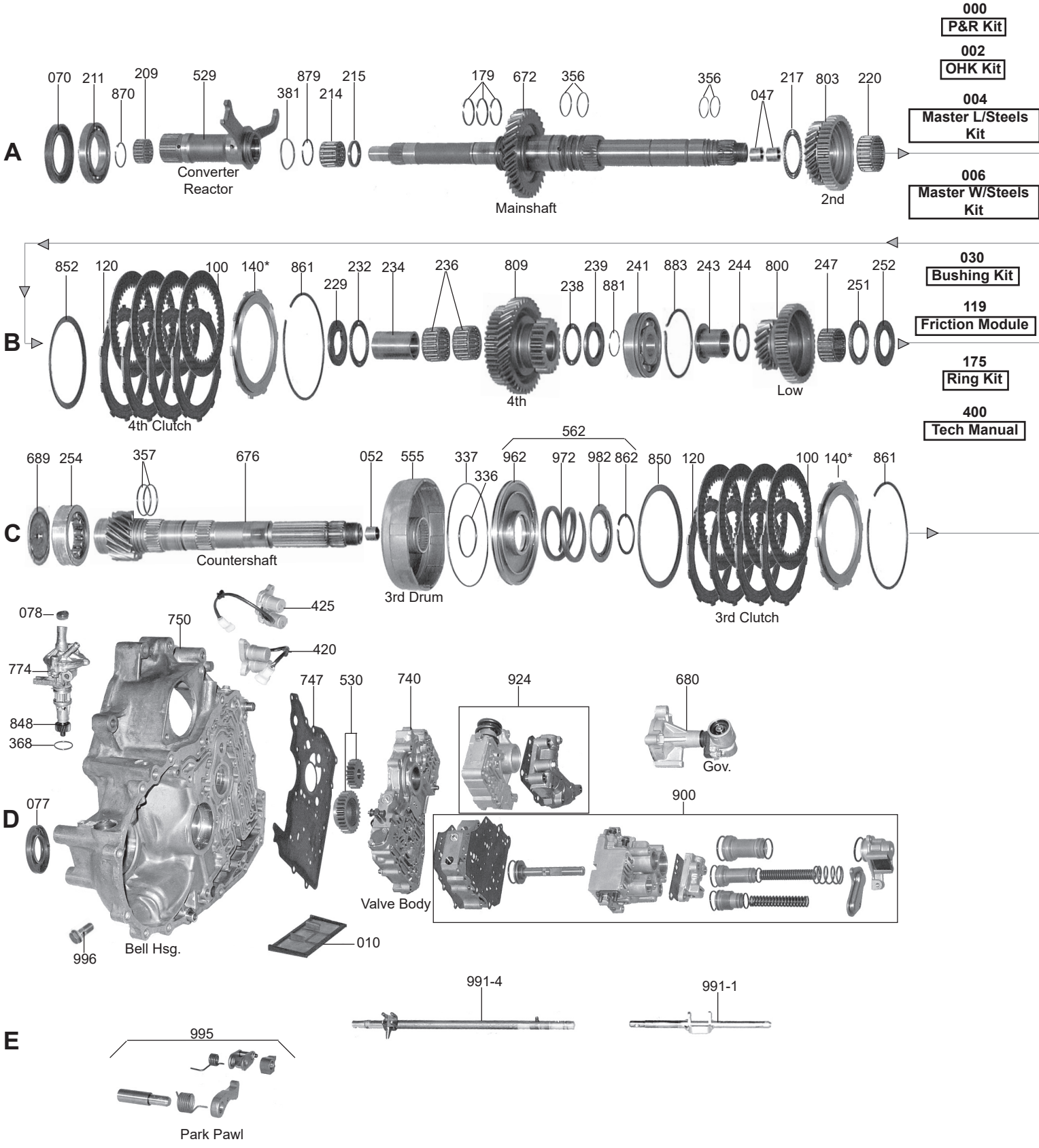

000 P&R Kit

002 OHK Kit

004 Master L/Steels Kit

006 Master W/Steels Kit

030 Bushing Kit

119 Friction Module

175 Ring Kit

400 Tech Manual

© Whatever It Takes Transmission Parts. Inc.

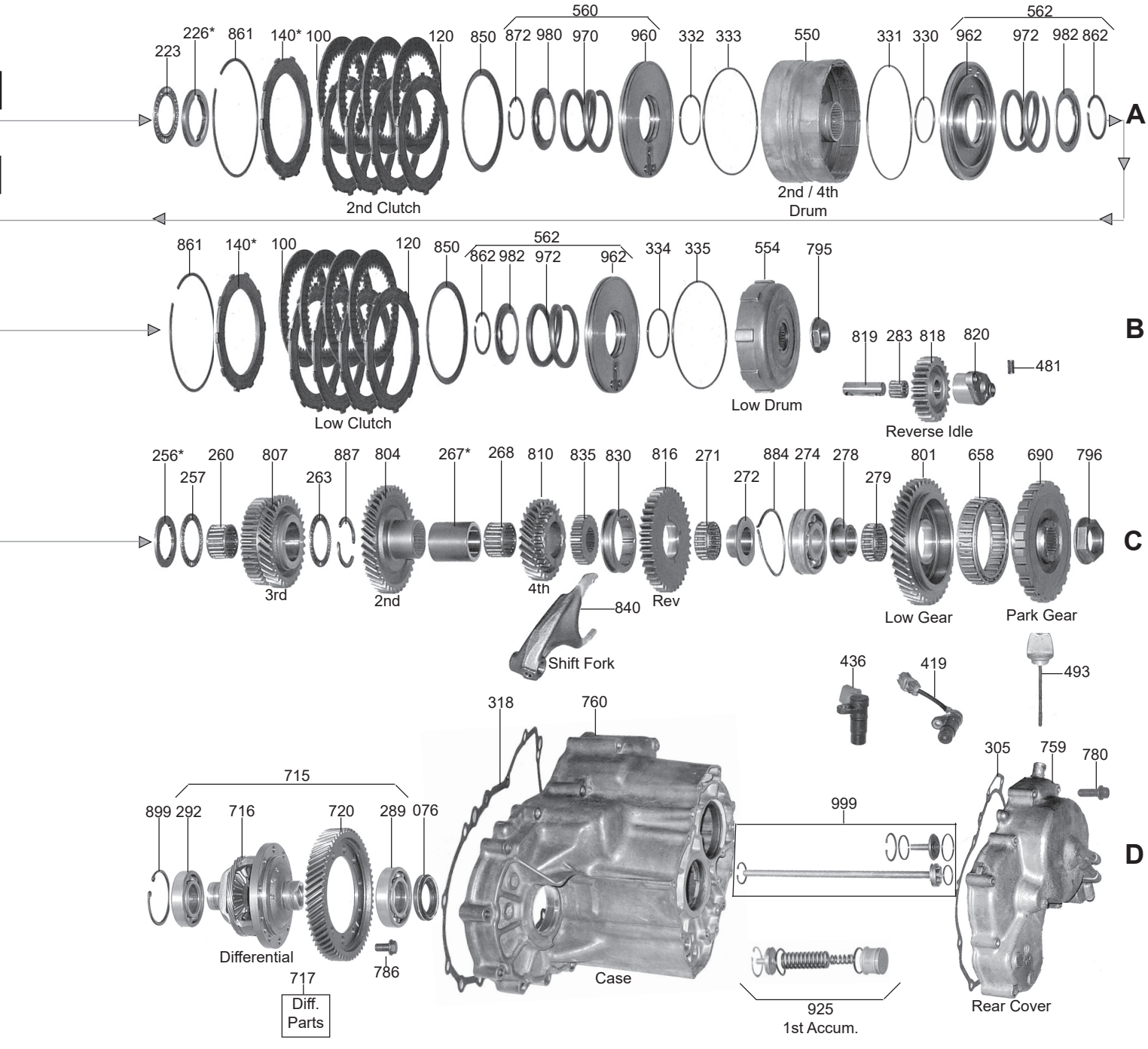

1-800-940-0197

© Whatever It Takes Transmission Parts. Inc.

PART #	PAPER & RUBBER KIT	QTY.	REFERENCE #
60000A	Paper & Rubber Kit, AK/AS/F4/CA/L4/P1 1983-91	1	
60000C	Paper & Rubber Kit, F4/K4/PY8A/MY8A 1985-91	1	
60000H	Paper & Rubber Kit, G4/L5/PL5X 1986-90	1	

PART #	OVERHAUL KITS	QTY.	REFERENCE #
60002A	Overhaul Kit, AK / AS 1983-87	1	
60002C	OverhaulKit, F4 1985-89	1	
60002D	Overhaul Kit, CA (Civic) 1986-87	1	
60002DA	Overhaul Kit, CA (Integra) 1986-87 & P1 1988-89	1	
60002E	Overhaul Kit, K4/PY8A/MY8A 1988-91	1	
60002H	Overhaul Kit, G4/L5/PL5X 86-90	1	
60002L	Overhaul Kit, L4/ML4A 1988-91	1	

PART #	MASTER L/STEEL KIT	QTY.	REFERENCE #
60004A	Master L/Steels Kit, AK 1982-83	1	
60004B	Master L/Steels Kit, AS 1983-87	1	
60004C	Master L/Steels Kit, F4 1985-89	1	
60004D	Master L/Steels Kit, CA (Civic) 1986-87	1	
60004DA	Master L/Steels Kit, CA (Integra) 1986-87 & P1 1988-89	1	
60004E	Master L/Steels Kit, K4/PY8A/MY8A 1988-91	1	
60004H	Master L/Steels Kit, G4/L5/PL5X 1986-90	1	
60004L	Master L/Steels Kit, L4/ML4A 1988-91	1	

PART #	MASTER W/STEEL KIT	QTY.	REFERENCE #
60006A	Master W/Steels Kit, AK 1982-83	1	
60006B	Master W/Steels Kit, AS 1984-87	1	
60006C	Master W/Steels Kit, F4 1985-89	1	
60006D	Master W/Steels Kit, CA (Civic) 1986-87	1	
60006DA	Master W/Steels Kit, CA (Integra) 1986-87 & P1 1988-89	1	
60006E	Master W/Steels Kit, K4/PY8A/MY8A 1988-91	1	
60006H	Master W/Steels Kit, G4/L5/PL5X 1986-90	1	
60006L	Master W/Steels Kit, L4/ML4A 1988-91	1	

PART #	FILTER	QTY.	REFERENCE #
60010A	Filter, AK/AS/F4/CA/L4/G4 1983-92	1	25420-PN6-700
60010D	Filter, P1 1988-89	1	25420-PL4-010
60010E	Filter, K4 (Prelude) 1988-89	1	
60010EC	Filter, K4 (PY8, Prelude) 199	1	25420-PY8-J10
60010Y	Filter, L5/PLX 1987-90	1	

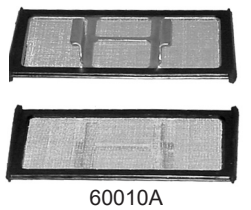
60010A

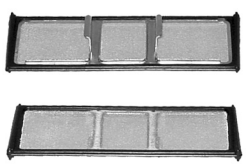
60010D

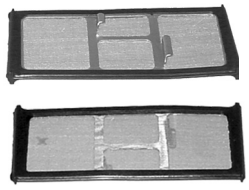
60010E

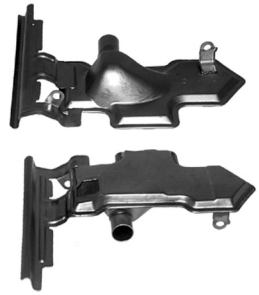
60010EC


60010Y

© Whatever It Takes Transmission Parts. Inc.

70018C ..... Screen, AK/AS/F4/K4/CA/L4/P1/G4/L5/PL5X (Some) In Valve Body (.570"OD)(.125" Thick Rubber Boot) 1
70018CA ..... Screen, AK/AS/F4/K4/CA/L4/P1/G4/L5/PL5X (Some) In Valve Body (.662"OD)(.315" Thick Rubber Boot) 1

PART #	BUSHINGS	QTY.	REFERENCE #
60030A	Bushing Kit, AK/AS/F4/K4/CA/L4/P1/G4/L5/PL5X	1	
T-28999	Tool Set, Acura/Honda (22 Pieces)(Bushing & Installer)(This Set Works For All Honda With Bushings)	1	
60047A	Bushing, AK/AS/F4/K4/CA/L4/P1/G4/L5/PL5X Mainshaft (Front, Small)	1	
60047AA	Bushing, AK/AS/F4/K4/CA/L4/P1/G4/L5/PL5X Mainshaft (Rear, Large)	1	
60052A	Bushing, AK/AS/F4/K4/CA/L4/P1/G4/L5/PL5X Countershaft (Large)	1	

PART #	METAL CLAD SEALS	QTY.	REFERENCE #
60070A	Seal, AK/AS/F4/K4/CA/L4/P1 Converter (44x68x8mm) (Counter Clockwise Helix)	1	
60070H	Seal, G4/L5/PL5X Converter (44x68x8mm) (Clockwise Helix)	1	91207-PG4-005
60072	Seal, AK/AS/F4/K4/CA/L4/P1/G4/L5/PL5X Manual Shaft (12x22x7mm) 1983-Up	1	91209-612-003
60072A	Seal, AK/AS/F4/K4/CA/L4 Throttle Shaft (9x18x7mm)	1	91201-PA9-004
60076AA	Seal, AK/AS/CA Axle (Case Side) (35x62x9mm)	1	91205-PC9-005
60076CA	Seal, F4/K4 Axle (Case Side) (40x62x9mm)	1	91205-PC9-711
60076G	Seal, P1 Axle (Case Side) (40x76x9mm)	1	91206-PC8-005
60076H	Seal, G4/L5/PL5X Axle (Case Side) (40x56x9mm) (Use 60077H)	1	91206-PG2-005
60076L	Seal, L4 Axle (Case Side) (35x76x9mm)	1	91206-689-005
60077A	Seal, F4/CA Axle (Bell Housing Side) (40x76x9mm)	1	91206-PC9-711
60077AA	Seal, AK/AS/CA Axle (Bell Housing Side) (35x76x9mm)	1	91206-PC9-005
60077C	Seal, K4/L4/P1 Axle (Bell Housing Side) (35x56x8mm)	1	91205-PL3-A00
60077E	Seal, K4 Axle (Bell Housing Side) (38x54x8mm) 1988-Up	1	
60077H	Seal, G4/L5/PL5X Axle (Bell Housing Side) (40x56x9mm) (Also Fits G4/L5/PL5X Case Side)	1-2	91206-PG2-005

PART #	FRICTION CLUTCH	QTY.	REFERENCE #
60100A	Friction, AK Low/2nd/3rd/4th Clutch (.075") 38 Teeth (106mm, 4.171"OD) 1983	12	22544-PA9-010
60100B	Friction, AS/CA/L4/P1 Low/2nd/3rd/4th Clutch (.075") 38 Teeth (110mm, 4.323"OD) 1984-91	12	22544-PC9-010
60100C	Friction, F4/K4/G4/L5/PL5X Low/2nd/3rd/4th Clutch (.075")41 Teeth(116mm, 4.556"OD) 1986-91	12-16	22544-PF4-010
60119A	Friction Module, AK (106mm, 4.171"OD) 1983	1	
60119B	Friction Module, AS/CA/L4/P1 (110mm, 4 5/16"OD) 1984-91	1	
60119BS1	Friction Module, AS/CA/L4/P1 (110mm, 4 5/16"OD) (Stage 1)	1	
60119C	Friction Module, F4/K4/G4/L5/PL5X (116mm, 4 9/16"OD) 1986-91	1	
60119CS1	Friction Module, F4/K4/G4/L5/PL5X (116mm, 4 9/16"OD) (Stage 1)	1	

PART #	STEEL CLUTCH	QTY.	REFERENCE #
60120A	Steel, AK Low/2nd/3rd/4th Clutch (.079") 8 Teeth (3.220"ID) 1983	12	22543-PA9-010
60120AA	Steel, AK Low/2nd/3rd/4th Clutch (.070") 8 Teeth (3.220"ID) 1983	AR	
60120B	Steel, AS/CA Low/2nd/3rd/4th Clutch (.079") 8 Teeth (3.230"ID) 1984-87	12	22543-PC9-000
60120BA	Steel, AS/CA/L4/P1 Low/2nd/3rd/4th Clutch (.070") 8 Teeth (3.230"ID) 1984-91	AR	
60120BB	Steel, L4/P1/CA Low Clutch (.063") 8 Teeth (3.230"ID) 1986-91	12	22543-PH0-850
60120C	Steel, F4/K4/G4/L5/PL5X Low/2nd/3rd/4th Clutch (.079") 10 Teeth (3.438"ID) 1986-91	12-16	22543-PF4-000
60120CA	Steel, F4/K4/G4/L5/PL5X Low/2nd/3rd/4th Clutch (.070") 10 Teeth (3.438"ID) 1986-91	AR	

PART #	CLUTCH PRESSURE PLATES	QTY.	REFERENCE #
60140A-1	Pressure Plate, AK Low/2nd/3rd/4th Clutch (Stamped # 1) 8 Teeth (3.220"ID) 1983	1-4	
60140A-2	Pressure Plate, AK Low/2nd/3rd/4th Clutch (Stamped # 2) 8 Teeth (3.220"ID) 1983	1-4	
60140A-3	Pressure Plate, AK Low/2nd/3rd/4th Clutch (Stamped # 3) 8 Teeth (3.220"ID) 1983	1-4	
60140A-4	Pressure Plate, AK Low/2nd/3rd/4th Clutch (Stamped # 4) 8 Teeth (3.220"ID) 1983	1-4	
60140A-5	Pressure Plate, AK Low/2nd/3rd/4th Clutch (Stamped # 5) 8 Teeth (3.220"ID) 1983	1-4	
60140A-6	Pressure Plate, AK Low/2nd/3rd/4th Clutch (Stamped # 6) 8 Teeth (3.220"ID) 1983	1-4	
60140A-7	Pressure Plate, AK Low/2nd/3rd/4th Clutch (Stamped # 7) 8 Teeth (3.220"ID) 1983	1-4	
60140A-8	Pressure Plate, AK Low/2nd/3rd/4th Clutch (Stamped # 8) 8 Teeth (3.220"ID) 1983	1-4	
60140A-9	Pressure Plate, AK Low/2nd/3rd/4th Clutch (Stamped # 9) 8 Teeth (3.220"ID) 1983	1-4	
60140A-10	Pressure Plate, AK Low/2nd/3rd/4th Clutch (Stamped # 10) 8 Teeth (3.220"ID) 1983	1-4	

© Whatever It Takes Transmission Parts. Inc.

PART #	CLUTCH PRESSURE PLATES	QTY.	REFERENCE #
60140B-1	Pressure Plate, AS/CA/L4/P1 Low/2nd/3rd/4th Clutch (Stamped # 1) 8 Teeth (3.230"ID) 84-91	1-4	
60140B-2	Pressure Plate, AS/CA/L4/P1 Low/2nd/3rd/4th Clutch (Stamped # 2) 8 Teeth (3.230"ID) 84-91	1-4	
60140B-3	Pressure Plate, AS/CA/L4/P1 Low/2nd/3rd/4th Clutch (Stamped # 3) 8 Teeth (3.230"ID) 84-91	1-4	
60140B-4	Pressure Plate, AS/CA/L4/P1 Low/2nd/3rd/4th Clutch (Stamped # 4) 8 Teeth (3.230"ID) 84-91	1-4	
60140B-5	Pressure Plate, AS/CA/L4/P1 Low/2nd/3rd/4th Clutch (Stamped # 5) 8 Teeth (3.230"ID) 84-91	1-4	
60140B-6	Pressure Plate, AS/CA/L4/P1 Low/2nd/3rd/4th Clutch (Stamped # 6) 8 Teeth (3.230"ID) 84-91	1-4	
60140B-7	Pressure Plate, AS/CA/L4/P1 Low/2nd/3rd/4th Clutch (Stamped # 7) 8 Teeth (3.230"ID) 84-91	1-4	
60140B-8	Pressure Plate, AS/CA/L4/P1 Low/2nd/3rd/4th Clutch (Stamped # 8) 8 Teeth (3.230"ID) 84-91	1-4	
60140B-9	Pressure Plate, AS/CA/L4/P1 Low/2nd/3rd/4th Clutch (Stamped # 9) 8 Teeth (3.230"ID) 84-91	1-4	
60140B-10	Pressure Plate, AS/CA/L4/P1 Low/2nd/3rd/4th Clutch (Stamped # 10) 8 Teeth (3.230"ID) 1984-91	1-4	
60140C-1	Pressure Plate, F4/K4/G4/L5/PL5X Low/2nd/3rd/4th Clutch (Stamped # 1) 10 Teeth (3.438"ID) 1986-91	1-4	
60140C-2	Pressure Plate, F4/K4/G4/L5/PL5X Low/2nd/3rd/4th Clutch (Stamped # 2) 10 Teeth (3.438"ID) 1986-91	1-4	
60140C-3	Pressure Plate, F4/K4/G4/L5/PL5X Low/2nd/3rd/4th Clutch (Stamped # 3) 10 Teeth (3.438"ID) 1986-91	1-4	
60140C-4	Pressure Plate, F4/K4/G4/L5/PL5X Low/2nd/3rd/4th Clutch (Stamped # 4) 10 Teeth (3.438"ID) 1986-91	1-4	
60140C-5	Pressure Plate, F4/K4/G4/L5/PL5X Low/2nd/3rd/4th Clutch (Stamped # 5) 10 Teeth (3.438"ID) 1986-91	1-4	
60140C-6	Pressure Plate, F4/K4/G4/L5/PL5X Low/2nd/3rd/4th Clutch (Stamped # 6) 10 Teeth (3.438"ID) 1986-91	1-4	
60140C-7	Pressure Plate, F4/K4/G4/L5/PL5X Low/2nd/3rd/4th Clutch (Stamped # 7) 10 Teeth (3.438"ID) 1986-91	1-4	
60140C-8	Pressure Plate, F4/K4/G4/L5/PL5X Low/2nd/3rd/4th Clutch (Stamped # 8) 10 Teeth (3.438"ID) 1986-91	1-4	
60140C-9	Pressure Plate, F4/K4/G4/L5/PL5X Low/2nd/3rd/4th Clutch (Stamped # 9) 10 Teeth (3.438"ID) 1986-91	1-4	
60140C-10	Pressure Plate, F4/K4/G4/L5/PL5X Low/2nd/3rd/4th Clutch (Stamped # 10) 10 Teeth (3.438"ID) 1986-91	1-4	

PART #	OIL SEALING RINGS	QTY.	REFERENCE #
60175A	Ring Kit, AK/AS/CA/L4/P1 1983-91	1	
60175B	Ring Kit, F4/K4/G4/L5/PL5X 1986-91	1	
60179A	Ring, AK/AS/CA/L4/P1 Mainshaft (1.259"OD) 1983-91	2-3	22814-PA9-023
60179B	Ring, F4/K4/G4/L5/PL5X Mainshaft (1.378"OD) 1986-90	3	
60179E	Ring, K4 (Prelude) Mainshaft (1.141"OD) 1988-91	1	

PART #	WASHERS & BEARINGS	QTY.	REFERENCE #
60209A	Caged Needle Bearing, AK/AS/CA/L4/P1 Converter Reactor (Front)	1	
60209C	Caged Needle Bearing, F4/K4/PY8A/G4/L5/PL5X Stator (Front)	1	
60211A	Ball Bearing, AK/AS/F4/K4/CA/L4/P1/G4/L5/PL5X Bell Housing (2.675"OD) (1.570"ID)	1	
60214A	Roller Bearing, AK/AS/CA/L4/P1 Mainshaft To Converter Reactor (1.014"OD)	1	
60214C	Roller Bearing, F4/K4/G4/L5 Mainshaft To Converter Reactor	1	91026-PC9-003
60214J	Roller Bearing, PL5X Mainshaft To Converter Reactor	1	
60215A	Spacer, AK/AS/CA Mainshaft To Bearing # 214 (.155" Thick)	1	
60215C	Spacer, F4/K4/G4/L5/PL5X Mainshaft To Bearing # 214	1	
60215L	Spacer, L4/MY8A/P1 Mainshaft To Bearing # 214 (.234" Thick)	1	
60217A	Thrust Bearing, AK/AS/F4/K4/CA/L4/P1/G4 Second Gear To Mainshaft	1	91026-PC9-003
60217Y	Thrust Bearing, L5/PL5X Second Gear To Mainshaft (Use 60223E)	1	
60220A	Caged Needle Bearing, AK/AS/F4/K4 Second Gear To Mainshaft (.712" Wide)	1	91026-PC9-E01
60220D	Caged Needle Bearing, CA/L4/P1 Second Gear To Mainshaft	1	91028-PL4-003
60220H	Caged Needle Bearing, G4 Second Gear To Mainshaft (.837" Wide)	1	
60220Y	Caged Needle Bearing, L5/PL5X Second Gear To Mainshaft	1	
60223A	Thrust Bearing, AK/AS/F4/CA/L4/P1 Second Gear To Mainshaft (2.035"OD) Fits F4 With Thin Hub 2-4 Drum	1	91023-PS5-003
S60223AB	Thrust Washer, AK/AS/F4/CA/L4/P1 Second Gear To Drum (Bronze Replacement) (Sonnax)	1	88406-SP
60223E	Thrust Bearing, F4/K4/G4/L5/PL5X Second Gear To Mainshaft (2.194"OD) Fits F4/G4 With Thick Hub 2-4 Drum	1-2	91023-PG4-013
S60223EB	Thrust Washer, F4/K4/G4/L5/Pl5X Second Gear To Drum (Bronze Replacement) (Sonnax)	1	88406C
60223H	Thrust Bearing, G4 Second Gear To Drum (.078" Thick) (2.200"OD) (With Thin Hub 2-4 Drum)	1	91023-PG4-003
S60223HB	Thrust Washer, G4 Second Gear To Drum (Bronze Replacement) (Sonnax)	1	88406B
60226A01	Race, AK/AS/F4/CA/L4/P1 Second Gear To Drum (2.010"OD) (.117")	1	90410-PC9-010
60226A02	Race, AK/AS/F4/CA/L4/P1 Second Gear To Drum (2.010"OD) (.119")	1	90411-PC9-010
60226A03	Race, AK/AS/F4/CA/L4/P1 Second Gear To Drum (2.010"OD) (.121")	1	90412-PC9-010

© Whatever It Takes Transmission Parts. Inc.

60226A04	Race, AK/AS/F4/CA/L4/P1 Second Gear To Drum (2.010”OD) (.123”)	1	90413-PC9-010
60226A05	Race, AK/AS/F4/CA/L4/P1 Second Gear To Drum (2.010”OD) (.125”)	1	90414-PC9-010
60226A06	Race, AK/AS/F4/CA/L4/P1 Second Gear To Drum (2.010”OD) (.127”)	1	90415-PC9-010
60226A07	Race, AK/AS/F4/CA/L4/P1 Second Gear To Drum (2.010”OD) (.129”)	1	90416-PC9-010
60226A08	Race, AK/AS/F4/CA/L4/P1 Second Gear To Drum (2.010”OD) (.131”)	1	90418-PC9-010
60226A09	Race, AK/AS/F4/CA/L4/P1 Second Gear To Drum (2.010”OD) (.135”)	1	90419-PC9-010
60226A10	Race, AK/AS/F4/CA/L4/P1 Second Gear To Drum (2.010”OD) (.137”)	1	90441-PC9-010
60226A11	Race, AK/AS/F4/CA/L4/P1 Second Gear To Drum (2.010”OD) (.139”)	1	90442-PC9-010
60226A12	Race, AK/AS/F4/CA/L4/P1 Second Gear To Drum (2.010”OD) (.141”)	1	90443-PC9-010
60226A13	Race, AK/AS/F4/CA/L4/P1 Second Gear To Drum (2.010”OD) (.143”)	1	90444-PC9-010
60226A14	Race, AK/AS/F4/CA/L4/P1 Second Gear To Drum (2.010”OD) (.145”)	1	90445-PC9-010
60226A15	Race, AK/AS/F4/CA/L4/P1 Second Gear To Drum (2.010”OD) (.147”)	1	90446-PC9-010
60226A16	Race, AK/AS/F4/CA/L4/P1 Second Gear To Drum (2.010”OD) (.149”)	1	90447-PC9-010
60226A17	Race, AK/AS/F4/CA/L4/P1 Second Gear To Drum (2.010”OD) (.151”)	1	90448-PC9-010
60226A18	Race, AK/AS/F4/CA/L4/P1 Second Gear To Drum (2.010”OD) (.153”)	1	90449-PC9-010
60226A19	Race, AK/AS/F4/CA/L4/P1 Second Gear To Drum (2.010”OD) (.155”)	1	90441-PF4-000
60226A20	Race, AK/AS/F4/CA/L4/P1 Second Gear To Drum (2.010”OD) (.157”)	1	90442-PF4-000
60226A21	Race, AK/AS/F4/CA/L4/P1 Second Gear To Drum (2.010”OD) (.159”)	1	90443-PF4-000
60226A22	Race, AK/AS/F4/CA/L4/P1 Second Gear To Drum (2.010”OD) (.161”)	1	90444-PF4-000
60226A23	Race, AK/AS/F4/CA/L4/P1 Second Gear To Drum (2.010”OD) (.163”)	1	90445-PF4-000
60226A24	Race, AK/AS/F4/CA/L4/P1 Second Gear To Drum (2.010”OD) (.165”)	1	90446-PF4-000
60226A25	Race, AK/AS/F4/CA/L4/P1 Second Gear To Drum (2.010”OD) (.167”)	1	90447-PF4-000
60226A26	Race, AK/AS/F4/CA/L4/P1 Second Gear To Drum (2.010”OD) (.169”)	1	90448-PF4-000
60226A27	Race, AK/AS/F4/CA/L4/P1 Second Gear To Drum (2.010”OD) (.171”)	1	90449-PF4-000
60226C1	Race, F4/K4/G4/L5/PL5X Second Gear To Drum (2.160”OD) (.155”)	1	90441-PG4-010
60226C2	Race, F4/K4/G4/L5/PL5X Second Gear To Drum (2.160”OD) (.157”)	1	260879
60226C3	Race, F4/K4/G4/L5/PL5X Second Gear To Drum (2.160”OD) (.159”)	1	90443-PG4-010
60226C4	Race, F4/K4/G4/L5/PL5X Second Gear To Drum (2.160”OD) (.161”)	1	90444-PG4-010
60226C5	Race, F4/K4/G4/L5/PL5X Second Gear To Drum (2.160”OD) (.163”)	1	90445-PG4-010
60226C6	Race, F4/K4/G4/L5/PL5X Second Gear To Drum (2.160”OD) (.165”)	1	90445-PG4-010
60226C7	Race, F4/K4/G4/L5/PL5X Second Gear To Drum (2.160”OD) (.167”)	1	90447-PG4-010
60226C8	Race, F4/K4/G4/L5/PL5X Second Gear To Drum (2.160”OD) (.169”)	1	90448-PG4-010
60226C9	Race, F4/K4/G4/L5/PL5X Second Gear To Drum (2.160”OD) (.171”)	1	90449-PG4-010
60226H1	Race, G4 Second Gear To Drum (With Thin Hub 2-4 Drum) (2.160”OD) (.155”)	1	90441-PG4-000
60226H2	Race, G4 Second Gear To Drum (With Thin Hub 2-4 Drum) (2.160”OD) (.157”)	1	90442-PG4-000
60226H3	Race, G4 Second Gear To Drum (With Thin Hub 2-4 Drum) (2.160”OD) (.159”)	1	237211
60226H4	Race, G4 Second Gear To Drum (With Thin Hub 2-4 Drum) (2.160”OD) (.161”)	1	90444-PG4-000
60226H5	Race, G4 Second Gear To Drum (With Thin Hub 2-4 Drum) (2.160”OD) (.163”)	1	90445-PG4-000
60226H6	Race, G4 Second Gear To Drum (With Thin Hub 2-4 Drum) (2.160”OD) (.165”)	1	90446-PG4-000
60226H7	Race, G4 Second Gear To Drum (With Thin Hub 2-4 Drum) (2.160”OD) (.167”)	1	90447-PG4-000
60226H8	Race, G4 Second Gear To Drum (With Thin Hub 2-4 Drum) (2.160”OD) (.169”)	1	90448-PG4-000
60226H9	Race, G4 Second Gear To Drum (With Thin Hub 2-4 Drum) (2.160”OD) (.171”)	1	90449-PG4-000
60229A	Race, AK/AS/F4/K4/CA/G4/L5/PL5X 2-4 Drum To 4th Gear (.118”)	1	
60229G	Race, L4/P1 2-4 Drum To 4th Gear (.117”)	1	
60232A	Thrust Bearing, AK/AS/F4/CA/L5/P1 (K4 & G4 Some) 2-4 Drum To 4th Gear (2.112”OD) (.076”) (Also Fits F4/K4/G4 3rd Gear (Countershaft) To 3rd Clutch Drum)	1-2	91031-PC9-003
60232E	Thrust Bearing, K4/G4 (Some) 2-4 Drum To 4th Gear (2.112”OD) (.097”) (Also Fits F4/K4 3rd Gear (Countershaft) To 3rd Clutch Drum)	1-2	91031-PG4-003
60232J	Thrust Bearing, PL5X 2-4 Drum To 4th Gear	1	
60234A	Collar, AK/AS/F4/K4/G4/L5/PL5X 4th Gear (Mainshaft) (Inner) (1.774” Long)	1	
60234D	Collar, CA/L4/P1 4th Gear (Mainshaft) (Inner) (1.677” Long)	1	
60236A	Caged Needle Bearing, AK/AS/F4/K4/L4/CA/P1 4th Gear (Mainshaft) (.774” Thick)	2	
60236D	Caged Needle Bearing, L4/CA/P1 4th Gear (Mainshaft) (.535” Thick) (Use 60279C)	2	
60236G	Caged Needle Bearing, G4/L5/PL5X 4th Gear (Mainshaft) (.768” Thick) (Use 60268Y)	2	
60238A	Thrust Bearing, AK/AS/F4/K4/L4/CA/P1/G4/L5/PL5X 4th Gear (Mainshaft) To Race	1	91018-P56-003
60239A	Race, AK/AS/F4/K4/L4/CA/P1 4th Gear (Mainshaft) (Rear) (.116”)	1	
60239H	Race, G4/L5/PL5X 4th Gear (Mainshaft) (Rear) (.150”)	1	
60241A	Ball Bearing, AK/AS Case To Mainshaft (2.670”OD)	1	
60241C	Ball Bearing, F4/K4/G4/L5 Case To Mainshaft (2.952”OD) (Use 60274CA)	1	
60241D	Ball Bearing, L4/CA/P1 Case To Mainshaft (2.755”OD)	1	
60241J	Ball Bearing, PL5X Case To Mainshaft (2.950”OD) (Use 60274J)	1	
60243A	Collar, AK/AS/CA Low Gear (Mainshaft) (Inner) (.986” Wide)	1	
60243C	Collar, F4/K4/G4/L5/PL5X Low Gear (Mainshaft) (Inner) (1.064” Wide)	1	
60243G	Collar, L4/P1 Low Gear (Mainshaft) (Inner) (1.102” Wide)	1	
60244A	Washer, AK/AS/ Low Gear (Mainshaft) To Collar (1.710”OD)	1	
60244C	Washer, F4/K4/CA/G4/L5/PL5X Low Gear (Mainshaft) To Collar (1.646”OD)	1	
60244G	Washer, L4/P1 Low Gear (Mainshaft) To Collar (1.565”OD)	1	
60247A	Caged Needle Bearing, AK/AS/F4/K4/G4/L5/PL5X Low Gear (Mainshaft) (1.220”ID)	1	
60247D	Caged Needle Bearing, CA Low Gear (Mainshaft)	1	
60247G	Caged Needle Bearing, L4/P1 Low Gear (Mainshaft) (1.102”ID)	1	

© Whatever It Takes Transmission Parts. Inc.

PART #	WASHERS & BEARINGS (Continued)	QTY.	REFERENCE #
60251A	Thrust Bearing, AK/AS/F4/K4/CA/G4/L5/PL5X Low Drum To Low Gear	1	
60251G	Thrust Bearing, L4/P1 Low Drum To Low Gear (1.385"ID)	1	
60252A	Race, AK/AS/F4/K4/CA/G4/L4/PL5X Low Drum To Low Gear	1	
60252G	Race, L4/P1 Low Drum To Low Gear (.910"ID)	1	
60254A	Roller Bearing, AK/AS Countershaft To Bell Housing (2.165"OD)	1	117111
60254C	Roller Bearing, F4/K4/G4/L5 Countershaft To Bell Housing (2.638"OD)	1	91102-PF0-003
60254D	Roller Bearing, L4/CA/P1 Countershaft To Bell (2.442"OD)	1	
60254J	Roller Bearing, PL5X Countershaft To Bell Housing	1	
60256A1	Race, AK/AS/L4/CA/P1 3rd Gear (Countershaft) To 3rd Clutch Drum (.118")	1	90411-PA9-010
60256A2	Race, AK/AS/L4/CA/P1 3rd Gear (Countershaft) To 3rd Clutch Drum (.119")	1	90412-PA9-010
60256A3	Race, AK/AS/L4/CA/P1 3rd Gear (Countershaft) To 3rd Clutch Drum (.120")	1	90413-PA9-010
60256A4	Race, AK/AS/L4/CA/P1 3rd Gear (Countershaft) To 3rd Clutch Drum (.121")	1	90414-PA9-010
60256A5	Race, AK/AS/L4/CA/P1 3rd Gear (Countershaft) To 3rd Clutch Drum (.122")	1	90415-PA9-010
60256A6	Race, AK/AS/L4/CA/P1 3rd Gear (Countershaft) To 3rd Clutch Drum (.123")	1	90418-PA9-000
60256A7	Race, AK/AS/L4/CA/P1 3rd Gear (Countershaft) To 3rd Clutch Drum (.124")	1	90419-PA9-000
60256A8	Race, AK/AS/L4/CA/P1 3rd Gear (Countershaft) To 3rd Clutch Drum (.125")	1	90420-PA9-000
60256A9	Race, AK/AS/L4/CA/P1 3rd Gear (Countershaft) To 3rd Clutch Drum (.126")	1	90421-PA9-000
60256C1	Race, F4/K4 3rd Gear (Countershaft) To 3rd Clutch Drum (.118")	1	90411-PF4-000
60256C2	Race, F4/K4 3rd Gear (Countershaft) To 3rd Clutch Drum (.119")	1	90412-PF4-000
60256C3	Race, F4/K4 3rd Gear (Countershaft) To 3rd Clutch Drum (.120")	1	90413-PF4-000
60256C4	Race, F4/K4 3rd Gear (Countershaft) To 3rd Clutch Drum (.121")	1	90414-PF4-000
60256C5	Race, F4/K4 3rd Gear (Countershaft) To 3rd Clutch Drum (.122")	1	90415-PF4-000
60256C6	Race, F4/K4 3rd Gear (Countershaft) To 3rd Clutch Drum (.123")	1	90416-PF4-000
60256C7	Race, F4/K4 3rd Gear (Countershaft) To 3rd Clutch Drum (.124")	1	90417-PF4-000
60256C8	Race, F4/K4 3rd Gear (Countershaft) To 3rd Clutch Drum (.125")	1	90418-PF4-000
60256C9	Race, F4/K4 3rd Gear (Countershaft) To 3rd Clutch Drum (.126")	1	90419-PF4-000
60256H	Race, G4 3rd Gear (Countershaft) To 3rd Clutch Drum (2.050"OD) (.178")	1	
60256Y	Race With Collar, L5/PL5X 3rd Gear (Countershaft) To 3rd Clutch Drum	1	
60257A	Thrust Bearing, AK/AS/L4/CA/P1 3rd Gear (Countershaft) To 3rd Clutch Drum (2.031"OD)	1	91014-PA9-003
60257C	Thrust Bearing, F4/K4/G4 3rd Gear (Countershaft) To 3rd Clutch Drum (2.112"OD) (.076") (Use 60232A)	1	
60257CA	Thrust Bearing, F4/K4 3rd Gear (Countershaft) To 3rd Clutch Drum (2.112"OD) (.097") (Use 60232E)	1	
60257Y	Thrust Bearing, L5/PL5X 3rd Gear (Countershaft) To 3rd Clutch Drum	1	
60260A	Caged Needle Bearing, AK/AS/L4/CA/P1 3rd Gear (Countershaft) (Inner)	1	91011-PG4-003
60260C	Caged Needle Bearing, F4/K4/G4 3rd Gear (Countershaft) (Inner) (.930" Wide)	1	91028-PF4-A01
60260Y	Caged Needle Bearing, L5/PL5X 3rd Gear (Countershaft) (Inner)	1	
60267A1	Collar, AK/AS/F4/K4/L4/P1 2nd Gear To 4th Gear (Countershaft) (1.535")	1	90503-PC9-000
60267A2	Collar, AK/AS/F4/K4/L4/P1 2nd Gear To 4th Gear (Countershaft) (1.537")	1	90504-PC9-000
60267A3	Collar, AK/AS/F4/K4/L4/P1 2nd Gear To 4th Gear (Countershaft) (1.539")	1	90504-PC9-000
60267A4	Collar, AK/AS/F4/K4/L4/P1 2nd Gear To 4th Gear (Countershaft) (1.541")	1	9057-PC9-000
60267A5	Collar, AK/AS/F4/K4/L4/P1 2nd Gear To 4th Gear (Countershaft) (1.543")	1	9050-PC9-000
60267A6	Collar, AK/AS/F4/K4/L4/P1 2nd Gear To 4th Gear (Countershaft) (1.547")	1	90509-PC9-000
60267D	Collar, CA 2nd Gear To 4th Gear (Countershaft) (1.337")	1	
60267H	Collar, G4 2nd Gear To 4th Gear (Countershaft)	1	
60267Y	Collar, L5/PL5X 2nd Gear To 4th Gear (Countershaft)	1	
60268A	Caged Needle Bearing, AK/AS/F4/K4/L4/P1/G4 4th Gear (Countershaft)	1	91027-PC9-003
60268Y	Caged Needle Bearing, L5/PL5X 4th Gear Countershaft (.768" Thick) (Also Fits G4/L5/PL5X 4th Gear Mainshaft)	1-2	
60271A	Caged Needle Bearing, AK/AS/L4/CA/P1 Reverse Gear (Countershaft) (1.413"OD)	1	
60271C	Caged Needle Bearing, F4/K4/G4 Reverse Gear (Countershaft)	1	
60271Y	Caged Needle Bearing, L5/PL5X Reverse Gear (Countershaft) (Use 60279Y)	1	
60272A	Collar, AK/AS/L4/CA/P1 Reverse Gear (Countershaft) (Also Fits P1 Low Gear (Countershaft)	1-2	
60272C	Collar, F4/K4/G4 Reverse Gear (Countershaft) (1.258"OD) (Also Fits F4/K4/G4 Low Gear (Countershaft)	1-2	
60272Y	Collar, L5/PL5X Reverse Gear (Countershaft) (1.180"OD) (.650" Thick)	1	
60274A	Ball Bearing, AK/AS (Some CA) Countershaft To Case (2.440"OD)	1	
60274C	Ball Bearing, (Some F4/K4) Countershaft To Case (2.670"OD)	1	
60274CA	Ball Bearing, F4/K4/L5/G4 Countershaft To Case (2.952"OD) (Also Fits F4/K4/G4/L5 Mainshaft To Case)	1-2	
60274D	Ball Bearing, L4/P1 (Some CA) Countershaft To Case (2.520"OD) (Last 3 Cast # NVI)	1	
60274DA	Ball Bearing, (Some CA) Countershaft To Case (Last 3 Cast # OIN)	1	
60274J	Ball Bearing, PL5X Countershaft To Case (2.952"OD) (Also Fits PL5X Mainshaft To Case)	1-2	
60274Y	Ball Bearing, (Some L5) Countershaft To Case (2.935"OD)	1	
60278A	Collar, AK/AS/CA Low Gear (Countershaft) (1.180"OD)	1	
60278C	Collar, F4/K4/G4 Low Gear (Countershaft) (1.258"OD) (Use 60272C)	1	
60278G	Collar, P1 Low Gear (Countershaft) (Use 60272A)	1	

© Whatever It Takes Transmission Parts. Inc.

60278L	Collar, L4 Low Gear (Countershaft) (1.220"OD)	1	
60278Y	Collar, L5/PL5X Low Gear (Countershaft)	1	
60279A	Caged Needle Bearing, AK/AS/CA Low Gear (Countershaft) (1.381"OD)	1	
60279C	Caged Needle Bearing, F4/K4/G4 Low Gear (Countershaft) (1.496"OD) (.535" Thick) (Also Fits L4/CA/P1 4th Gear (Mainshaft)	1-2	
60279G	Caged Needle Bearing, L4/P1 Low/Gear (Countershaft) (1.418"OD)	1	
60279Y	Caged Needle Bearing, L5/PL5X Low Gear (Countershaft) (1.536"OD) (Also Fits L5/PL5X Reverse Gear (Countershaft)	1-2	
60283A	Caged Needle Bearing, AK/AS/F4/K4/L4/CA/P1/G4/L5/PL5X Reverse (Idler Shaft)	1	
60288EC	Cup Race, PY8A Differential Bearing To Case	1	
60290EC	Shim, PY8A Differential Cup Race To Case (.103" Thick)	1	
60291EC	Cup Race, PY8A Differential Bearing To Bell Housing	1	

PART #	GASKETS & RUBBER COMPONENTS	QTY.	REFERENCE #
60305A	Gasket, AK/AS/CA Side Cover	1	
60305C	Gasket, F4 Side Cover	1	
60305E	Gasket, K4 Side Cover	1	
60305G	Gasket, L4/P1 Side Cover	1	
60305H	Gasket, G4 Side Cover	1	
60305Y	Gasket, L5/PL5X Side Cover	1	
60313A	O-Ring, Honda Converter (OE Upgraded)(Fits On ConverterHub, Inside Of Drive Pump Gear)	1	
60318A	Gasket, AK/AS Converter Housing To Case	1	
60318C	Gasket, F4 Converter Housing To Case	1	
60318D	Gasket, CA Converter Housing To Case	1	
60318E	Gasket, K4 Converter Housing To Case	1	
60318G	Gasket, P1 Converter Housing To Case	1	
60318H	Gasket, G4 Converter Housing To Case	1	
60318L	Gasket, L4 Converter Housing To Case	1	
60318Y	Gasket, L5/PL5X Converter Housing To Case	1	
60332C	O-Ring, F4/K4/CA/L4/P1/G4/L5/PL5X 2nd Clutch (Inner)	1	91302-PG4-003
60381A	O-Ring, AK/AS/CA/F4/L4 Converter Hub (Small)	1	60130P

PART #	TECHNICAL MANUALS	QTY.	REFERENCE #
60400A	Technical Manual, AK/AS (Carb) 1983-87	1	83-HDA4SPDCAR
60400C	Technical Manual, F4 (Revised)	1	83-HDA4SPDFIT
60400D	Technical Manual, CA Integra 1986-87	1	83-INT8788TM
60400E	Technical Manual, K4 Prelude (Computer Controlled) 1988-91	1	83-HDA4SPDCCT
60400H	Technical Manual, G4 Legend 1986-87	1	83-LEG8788TM
60400Y	Technical Manual, L5/PL5X Legend (Computer Controlled) 1987-90	1	83-LEG8990TM

PART #	ELECTRICAL COMPONENTS	QTY.	REFERENCE #
60419Y	Speed Pulse Sensor, L5 (On Outside Of Rear Cover)	1	
60420E	Solenoid Assembly, K4 Shift (2 Inside Of Case)	1	28203-PK4-305
60420H	Solenoid, G4 Shift (The 1 On The Inside Of Case)	1	27720-PG4-003
60420L	Solenoid Assembly, L4 Shift/Lock-Up (The 2 On The Top Outside Of Bell)	1	
60420Y	Solenoid Assembly, L5/PL5X Shift (The Bottom 2 On The Outside Of The Bell)	1	28200-PL5-033
60425EA	Solenoid Assembly, K4 Lock-Up (Prelude) (The Top 2 On The Outside Of The Bell) 1988	1	28300-PK4-013
60425EB	Solenoid Assembly, K4 Lock-Up (Prelude) (The Top 2 On The Outside Of The Bell) 1989	1	28300-PK4-901
60425EC	Solenoid Assembly, MY8A/PY8A (Prelude) Lock-Up (The Top 2 On The Outside Of The Bell) 1990-91	1	28300-PY8-J10
60425L	Soloenoid, P1/L4 Lock-Up (The 1 On The Top Outside Of Bell)	1	28200-PL4-681
60425Y	Solenoid Assembly, L5/PL5X Lock-Up (The Top 2 On The Outside Of The Bell)	1	28300-PL5-033
60436Y	Speed Sensor, L5/PL5X (On The Outside Of Rear Cover)	1	

PART #	MISC. COMPONENTS	QTY.	REFERENCE #
60481A	Spring & Ball, AK Reverse Idler	1	
60481B	Spring & Ball, AS Reverse Idler	1	
60481C	Spring & Ball, F4 Reverse Idler	1	
60481D	Spring & Ball, CA Reverse Idler	1	
60481E	Spring & Ball, K4 Reverse Idler	1	
60481G	Spring & Ball, P1 Reverse Idler	1	
60481H	Spring & Ball, G4 Reverse Idler	1	
60481J	Spring & Ball, PL5X Reverse Idler	1	
60481L	Spring & Ball, L4 Reverse Idler	1	
60481Y	Spring & Ball, L5 Reverse Idler	1	

© Whatever It Takes Transmission Parts. Inc.

PART #	MISC. COMPONENTS	QTY.	REFERENCE #
60493A	Dipstick, AK/AS (Screws Into Rear Cover)	1	
60493C	Dipstick, F4 (Screws Into Tube On Case)	1	
60493D	Dipstick, CA (Screws Into Case)	1	
60493E	Dipstick, K4/PY8A (Pushes Into Case)	1	
60493H	Dipstick, G4 (Pushes Into Tube On Case)	1	
60493L	Dipstick, L4/MY8A/P1 (Pushes Into Tube On Case)	1	
60493Y	Dipstick, L5/PL5X (Pushes Into Tube On Case)	1	

PART #	HARD PARTS	QTY.	REFERENCE #
60529A	Shaft, AK/AS Stator (Cast # PC)	1	
60529C	Shaft, F4 Stator (Cast # PF4)	1	
60529D	Shaft, CA Stator (Cast # PHO)	1	
60529E	Shaft, K4 Stator	1	
60529G	Shaft, L4/P1 Stator (Cast # PL4)	1	
60529H	Shaft, G4 Stator	1	
60529Y	Shaft, L5/PL5X Stator	1	
60530A	Pump Gears, AK/AS/CA (Some F4/L4) 36 Spline Gear	1	
60530C	Pump Gears, F4 (38 Splines Gear) 28 Teeth (.470" Thick)	1	
60530E	Pump Gears, K4/G4/P1 (Some F4/L4) 38 Spline Gear (.470" Thick) 32 Teeth	1	
60530Y	Pump Gears, L5/PL5X (38 Spline Gear) 28 Teeth (.550" Thick)	1	
60550A	Drum, AK 2-4 Clutch (Less Piston)	1	
60550B	Drum, AS 2-4 Clutch (With Tag # Up To 1195293)	1	22610-PC9-020
60550BA	Drum, AS 2-4 Clutch (Less Piston) (With Tag # 1195294 Or Larger)	1	
60550C	Drum, F4 2-4 Clutch (With Thin Hub)	1	
60550CK	Change Over Kit, F4 (Thin Hub To Thick Hub Drum) (Includes # 803, 223, 226, 872, 980, 970, 960 & 550)	1	
60550D	Drum, CA 2-4 Clutch (Less Pistons) (Civic, All) (Integra With Tag # Up To 1290173)	1	
60550DA	Drum, CA 2-4 Clutch (Less Pistons) (Integra With Tag # 1290174 Or Larger)	1	22610-PH0-852
60550E	Drum, K4 (Some F4) 2-4 Clutch (Less Pistons) With Thick Hub	1	22610-PK4-000
60550G	Drum, L4/P1 2-4 Clutch (Less Pistons)	1	22610-PL4-850
60550H	Drum, G4 2-4 Clutch (Less Pistons) With Thin Hub	1	
60550HA	Drum, G4/L5/PL5X 2-4 Clutch (Less Pistons) With Thick Hub	1	

PART #	HARD PARTS (Continued)	QTY.	REFERENCE #
60554A	Drum, AK Low Clutch Guide (4 3/16"OD Friction)	1	
60554B	Drum, AS/L4 (CA Civic) Low Clutch (4 5/16"OD Frictions) 1.245" Tall	1	
60554C	Drum, F4/K4 Low Clutch (4 9/16"OD Frictions)	1	
60554D	Drum, CA Low Clutch (.910"ID Of Drum) 1.206" Tall	1	
60554DA	Drum, CA Low Clutch (1.025"ID Of Drum) 1.206" Tall	1	
60554H	Drum, G4 Low Clutch (4 9/16"OD Friction) 4 Clutch	1	
60554Y	Drum, L5/PL5X Low Clutch (4 9/16"OD Friction) 4 Clutch	1	
60555A	Drum, AK 3rd Clutch (4 3/16"OD Friction)	1	
60555B	Drum, AS/L4 3rd Clutch (4 5/16"OD Friction) 1.245" Tall	1	
60555C	Drum, F4/K4 3rd Clutch (4 9/16"OD Friction)	1	
60555D	Drum, CA/P1 3rd Clutch (4 5/16"OD Friction) 1.206" Tall	1	
60555H	Drum, G4 3rd Clutch (4 9/16"OD Friction)	1	
60555Y	Drum, L5/PL5X 3rd Clutch (4 9/16"OD Frictions)	1	

PART #	SPRAGS & ONE WAY CLUTCHES	QTY.	REFERENCE #
60658A	Sprag, AK/AS/L4/CA/P1 Low (26 Lugs)	1	
60658C	Sprag, F4/K4/G4 Low (28 Lugs)	1	
60658Y	Sprag, L5/PL5X Low (28 Lugs)	1	

PART #	HARD PARTS (Continued)	QTY.	REFERENCE #
60672A	Mainshaft, AK/AS (31 Teeth) 15" Long (With 3 Rings)	1	23210-PC9-811
60672AC	Mainshaft, AK (31 Teeth) 15" Long (With 2 Rings) (Prelude 1983)	1	
60672B	Mainshaft, AS (30 Teeth) 15 1/8" Long 1985 (SEI Model)	1	
60672C	Mainshaft, F4 (33 Teeth) 15 1/2" Long (3.465"OD Of Gear) (Carb)	1	23210-PF4-700
60672CA	Mainshaft, F4 (33 Teeth) 15 1/2" Long (3.415"OD Of Gear) (Fuel Injected)	1	23210-PF4-710
60672D	Mainshaft, CA (32 Teeth) 14 1/2" Long (No Step) (Civic)	1	
60672DA	Mainshaft, CA (32 Teeth) 14 1/2" Long (With Step) (Acura)	1	23210-PHO-670
60672E	Mainshaft, K4 (33 Teeth) 15 1/2" Long (3.465"OD Of Gear) (No Grooves)	1	
60672EA	Mainshaft, K4 (33 Teeth) 15 1/2" Long (3.415"OD Of Gear) (1 Groove)	1	23210-PK4-A20
60672EC	Mainshaft, PY8A (33 Teeth) 15 3/4" Long	1	

© Whatever It Takes Transmission Parts. Inc.

60672G	Mainshaft, L4/P1 (36 Teeth) 14 3/4” Long (2 Narrow Grooves)	1	
60672GA	Mainshaft, L4/P1 (36 Teeth) 14 3/4” Long (2 Wide Grooves)	1	
60672H	Mainshaft, G4 (35 Teeth) 16 7/16” Long (3.669”OD Of Gear)	1	
60672Y	Mainshaft, L5/PL5X (35 Teeth) 16 3/4” Long (3.615”OD Of Gear) (7 3/8” Form Gear To Front Of Shaft	1	
60672YA	Mainshaft, L5 (35 Teeth) 16 3/4” Long (3.615”OD Of Gear) (7 7/8” From Gear To Front Of Shaft)	1	
60676A	Countershaft, AK/AS (16 Teeth) 10 1/2” Long	1	23220-PC9-020
60676C	Countershaft, F4 (15 Teeth) 11” Long (Uses .738”ID Nut)	1	
60676CA	Countershaft, F4 (15 Teeth) 11” Long (Uses .854”ID Nut)	1	23220-PF4-700
60676D	Countershaft, CA (15 Teeth) 10” Long (Civic)	1	
60676DA	Countershaft, CA (14 Teeth) 10” Long (Acura)	1	23010-PH0-660
60676E	Countershaft, K4 (15 Teeth) 11 1/8” Long	1	23220-PK4-010
60676EB	Countershaft, PY8A (15 Teeth) 11 1/8” Long (2 Grooves)	1	
60676EC	Countershaft, PY8A (14 Teeth) 11 1/8” Long (No Groove)	1	
60676H	Countershaft, G4 (15 Teeth) 11 1/2” Long (No Groove)	1	23220-PG4-050
60676HA	Countershaft, G4 (15 Teeth) 11 1/2” Long (1 Groove)	1	
60676J	Countershaft, PL5X (15 Teeth)	1	
60676L	Countershaft, L4/P1 (14 Teeth) 10 1/2” Long	1	23220-PP1-000
60676LA	Countershaft, L4 (15 Teeth) 10 3/8” Long	1	
60676LB	Countershaft, MY8A (16 Teeth) 10 1/2” Long (1 Groove)	1	
60676Y	Countershaft, L5 (15 Teeth) 11 5/8” Long (.902”OD Threads) (27 Splines Under Nut)	1	
60676YA	Countershaft, L5 (15 Teeth) 11 5/8” Long (.978”OD Threads) (27 Splines Under Nut)	1	
60676YB	Countershaft, L5 (15 Teeth) 11 5/8” Long (25 Splines Under Nut)	1	
60680A	Governor Assembly, AK/AS With Gear (Cast # PC9)	1	
60680C	Governor Assembly, F4 With Gear (Cast # PF4)	1	
60680D	Governor Assembly, CA With Gear (Cast # PCX)	1	
60680E	Governor Assembly, K4 With Gear (Cast # PK4)	1	
60680G	Governor Assembly, P1 With Gear	1	
60680H	Governor Assembly, G4 With Gear (Cast # PG4)	1	
60680L	Governor Assembly, L4 With Gear (Cast # PL4) 15 Teeth	1	
60680LA	Governor Assembly, L4 With Gear (Cast # PL4) 14 Teeth	1	
60680Y	Governor Assembly, L5 With Gear	1	
60689A	Plate, AK/AS/F4/K4/L4/CA/P1/G4/L5/PL5X Oil Guide	1	23225-PF0-850
60690A	Gear, AK/AS/CA Park (21 Lugs) 4 1/16”OD	1	
60690C	Gear, F4/G4 Park (23 Lugs) 4 3/8”OD (3/8” Thick At Lugs)	1	
60690E	Gear, F4/K4 Park (10 Lugs) 4 3/8”OD (3/8” Thick At Lugs)	1	
60690L	Gear, L4/P1 Park (10 Lugs) 4 1/16”OD	1	
60690Y	Gear, L5/PL5X Park (23 Lugs) 4 3/8”OD	1	
60690YA	Gear, L5/PL5X Park (23 Lugs) 4 3/8”OD (1/2” Thick At Lugs)	1	
60715A	Differential, AK/AS (62 Teeth) 2 Groove (1.020” Axle Diameter)	1	
60715C	Differential, F4 (61 Teeth) No Groove (1.100” Axle Diameter)	1	
60715CA	Differential, F4 (61 Teeth) 1 Groove (1.100” Axle Diameter)	1	
60715D	Differential, CA (59 Teeth) .780” Thick Gear (1.020” Axle Diameter)	1	
60715DA	Differential, CA/P1 (59 Teeth) .912” Thick Gear (1.100” Axle Diameter)	1	
60715DAA	Differential, CA/P1 (59 Teeth) .912” Thick Gear (2 Groove) (1.020” Axle Diameter)	1	
60715DAB	Differential, CA/P1 (59 Teeth) .912” Thick Gear (No Groove) (1.020” Axle Diameter)	1	
60715DB	Differential, CA/P1 (59 Teeth) .770” Thick Gear (1.100” Axle Diameter)	1	
60715E	Differential, K4 (61 Teeth) 1 Groove (With Tapered Bearings)	1	
60715EA	Differential, K4 (62 Teeth) No Groove (With Tapered Bearings)	1	
60715EB	Differential, PY8A (62 Teeth) 3 Groove (With Tapered Bearings)	1	
60715G	Differential, P1 (59 Teeth) .912” Thick Gear (1 Groove) (1.020” Axle Diameter)	1	
60715GA	Differential, P1 (59 Teeth) .770” Thick Gear (2 Groove) (1.100” Axle Diameter)	1	
60715H	Differential, G4 (63 Teeth) No Groove (With Tapered Bearings)	1	
60715L	Differential, L4 (59 Teeth) 1 Wide Groove (1.020” Axle Diameter)	1	
60715LB	Differential, MY8A (63 Teeth) 1 Groove (1.020” Axle Diameter)	1	
60715Y	Differential, L5/PL5X (64 Teeth) 1 Groove (With Tapered Bearings)	1	

PART #	DIFFERENTIAL COMPONENTS	QTY	REFERENCE #
60717C-8	Pin, F4/K4/L4/CA/P1 Differential Spider Gear (Gold Colored)	1	41321-PL3-T00
60717H-8	Pin, G4/L5/PL5X Differential Spider Gear (Gold Colored)	1	41321-PL5-Z00

© Whatever It Takes Transmission Parts. Inc.

PART #	HARD PARTS (Continued)	QTY	REFERENCE #
60740A	Valve Body, AK Less Gears	1	
60740B	Valve Body, AS Less Gears (Cast # 96)	1	
60740BA	Valve Body, AS Less Gears (Cast # 95)	1	
60740C	Valve Body, F4 Less Gears (Use With 36 Teeth Converter Hub)	1	
60740CA	Valve Body, F4 Less Gears (With 38 Teeth Converter Hub) Cast # PF4 (2 Bolts Under Regulator, Both Are 3/8" Deep & In 2 Separate Oil Galleys)	1	
60740CB	Valve Body, F4 Less Gears (With 38 Teeth Converter Hub) Cast # PF4 (2 Bolts Under Regulator, 1 Bolt Is 3/8" Deep & 1 Bolt Is 1/16" Deep And In 2 Separate Oil Galleys)	1	
60740CC	Valve Body, F4 Less Gears (With 38 Teeth Converter Hub) Cast # PF4 (2 Bolts Under Regulator, 1 Bolt Is 3/8" Deep & 1 Bolt Is 1/16" Deep And Both Are In The Same Oil Galley)	1	
60740CD	Valve Body, F4 Less Gears (With 38 Teeth Converter Hub) Cast # PF4 (2 Bolts Under Regulator, Both Bolts Are 3/8" Deep And In The Same Oil Galley)	1	
60740CE	Valve Body, F4 Less Gears (With 38 Teeth Converter Hub) Cast # PF4Y	1	
60740CG	Valve Body, F4 Less Gears (With 38 Teeth Converter Hub) Cast # PF4X	1	
60740CH	Valve Body, F4 Less Gears (Cast # PN6-70)	1	
60740D	Valve Body, CA Less Gears	1	
60740E	Valve Body, K4 Less Gears (No Solenoids)	1	
60740EA	Valve Body, K4 Less Gears (With 1 Solenoid) With Accumulator Body (With 1 Solenoid) (Solenoids Are Connected By A Wire Harness)	1	
60740EB	Valve Body, PY8A (Cast # PY8)	1	
60740G	Valve Body, P1 Less Gears	1	
60740H	Valve Body, G4 Less Gears	1	
60740J	Valve Body, PL5X Less Gears	1	
60740L	Valve Body, L4 Less Gears (Cast # PL4)	1	
60740LA	Valve Body, L4 Less Gears (Cast # PP6)	1	
60740Y	Valve Body, L5 Less Gears (Cast # PL5Y)	1	
60740YA	Valve Body, L5 Less Gears (Cast # PL5Z)	1	
60740YB	Valve Body, L5 Less Gears (Cast # L5)	1	

PART #	VALVE BODY COMPONENTS	QTY.	REFERENCE #
60747A	Plate, AK Valve Body	1	
60747B	Plate, AS Valve Body	1	
60747C	Plate, F4 Valve Body	1	
60747D	Plate, CA Valve Body	1	
60747E	Plate, K4 Valve Body	1	
60747G	Plate, P1 Valve Body	1	
60747H	Plate, G4 Valve Body	1	
60747J	Plate, PL5X Valve Body	1	
60747L	Plate, L4 Valve Body	1	
60747Y	Plate, L5 Valve Body	1	
60747YA	Plate, L5 Valve Body	1	

PART #	HARD PARTS (Continued)	QTY.	REFERENCE #
60750A	Bell Housing, AK	1	
60750B	Bell Housing, AS	1	
60750C	Bell Housing, F4 (Cast # PF4 8610)	1	
60750CA	Bell housing, F4 (Cast # PF47000, HM1 To HM6)	1	
60750CB	Bell Housing, F4 (Cast # PF4 7000, HM7 & Up)	1	
60750D	Bell Housing, CA (Cast # 0000)	1	
60750DA	Bell Housing, CA (Cast # 8500) (Acura)	1	
60750E	Bell Housing, K4	1	
60750EB	Bell Housing, PY8A	1	
60750G	Bell Housing, P1	1	
60750H	Bell Housing, G4	1	
60750J	Bell housing, PL5X	1	
60750L	Bell Housing, L4 (Civic 1.5L/1.6L) 1989-91	1	
60750LB	Bell Housing, MY8A (Civic 1.5L/1.6L) 1989-91	1	
60750Y	Bell Housing, L5 (Cast # PLR-2 or 3)	1	
60750YA	Bell Housing, L5 (Cast # PL5Z00)	1	
60759A	Rear Cover, AK With Tubes	1	
60759B	Rear Cover, AS With Tubes	1	
60759C	Rear Cover, F4 With Tubes	1	
60759D	Rear Cover, CA With Tubes	1	
60759E	Rear Cover, K4 With Tubes	1	
60759G	Rear Cover, P1 With Tubes	1	
60759H	Rear Cover, G4 With Tubes	1	

© Whatever It Takes Transmission Parts. Inc.

60759J	Rear Cover, PL5X With Tubes (No Speed Sensors)	1
60759JA	Rear Cover, PL5X With Tubes (Uses 2 Speed Sensors)	1
60759L	Rear Cover, L4 With Tubes	1
60759Y	Rear Cover, L5 With Tubes	1
60760A	Case, AK	1
60760B	Case, AS	1
60760C	Case, F4 1986-87	1
60760CA	Case, F4 1988-89	1
60760D	Case, CA	1
60760E	Case, K4	1
60760EB	Case, PY8A	1
60760G	Case, P1	1
60760H	Case, G4	1
60760L	Case, L4 (Up To Tag # 1051223) (No Threaded Bosses To The Bottom Right Of Rear Cover)	1
60760LA	Case, L4 (From Tag # 1051224 Up) Civic 1.5L/1.6L 1988-91 (No Threaded Bosses To The Bottom Right Of Rear Cover)	1
60760LAA	Case, L4 (With 3 Threaded Bosses To The Bottom Right Of Rear Cover)	1
60760LB	Case, MY8A (Civic 1.5L/1.6L) 1989-91	1
60760Y	Case, L5/PL5X (Without Sensor)	1
60760YA	Case, L5 (With Speed Sensor)	1
60774A	Speed-O Housing & Power Steering Pump, AK	1
60774B	Speed-O Housing & Power Steering Pump, AS	1
60774C	Speed-O Housing & Power Steering Pump, F4	1
60774D	Speed-O Housing & Power Steering Pump, CA	1
60774E	Speed-O Housing & Power Steering Pump, K4	1
60774G	Speed-O Housing & Power Steering Pump, P1	1
60774H	Speed-O Housing & Power Steering Pump, G4	1
60774J	Speed-O Housing & Power Steering Pump, PL5X	1
60774L	Speed-O Housing & Power Steering Pump, L4	1
60774Y	Speed-O Housing & Power Steering Pump, L5	1
60776AK	Bolt Set, AK Case To Bell	1
60776BK	Bolt Set, AS Case To Bell	1
60776CK	Bolt Set, F4 Case To Bell	1
60776DK	Bolt Set, CA Case To Bell	1
60776EK	Bolt Set, K4 Case To Bell	1
60776GK	Bolt Set, P1 Case To Bell	1
60776HK	Bolt Set, G4 Case To Bell	1
60776JK	Bolt Set, L5/PL5X Case To Bell	1
60776LK	Bolt Set, L4 Case To Bell	1
60780AK	Bolt Set, AK Rear Cover To Case	1
60780BK	Bolt Set, AS Rear Cover To Case	1
60780CK	Bolt Set, F4 Rear Cover To Case	1
60780DK	Bolt Set, CA Rear Cover To Case	1
60780EK	Bolt Set, K4 Rear Cover To Case	1
60780GK	Bolt Set, P1 Rear Cover To Case	1
60780HK	Bolt Set, G4 Rear Cover To Case	1
60780JK	Bolt Set, PL5X Rear Cover To Case	1
60780LK	Bolt Set, L4 Rear Cover To Case	1
60780YK	Bolt Set, L5 Rear Cover To Case	1
60782AK	Bolt Set, AK Valve Body To Bell Housing	1
60782BK	Bolt Set, AS Valve Body To Bell Housing	1
60782CK	Bolt Set, F4 Valve Body To Bell Housing	1
60782DK	Bolt Set, CA Valve Body To Bell Housing	1
60782EK	Bolt Set, K4 Valve Body To Bell Housing	1
60782GK	Bolt Set, P1 Valve Body To Bell Housing	1
60782HK	Bolt Set, G4 Valve Body To Bell Housing	1
60782JK	Bolt Set, PL5X Valve Body To Bell Housing	1
60782LK	Bolt Set, L4 Valve Body To Bell Housing	1
60782YK	Bolt Set, L5 Valve Body To Bell Housing	1
60784AK	Bolt Set, AK Holds Servo, Regulator & Valve Body To Bell	1
60784BK	Bolt Set, AS Holds Servo, Regulator & Valve Body To Bell	1
60784CK	Bolt Set, F4 Holds Servo, Regulator & Valve Body To Bell	1
60784DK	Bolt Set, CA Holds Servo, Regulator & Valve Body To Bell	1
60784EK	Bolt Set, K4 Holds Servo, Regulator & Valve Body To Bell	1
60784GK	Bolt Set, P1 Holds Servo, Regulator & Valve Body To Bell	1
60784HK	Bolt Set, G4 Holds Servo, Regulator & Valve Body To Bell	1
60784JK	Bolt Set, PL5X Holds Servo, Regulator & Valve Body To Bell	1
60784LK	Bolt Set, L4 Holds Servo, Regulator & Valve Body To Bell	1
60784YK	Bolt Set, L5 Holds Servo, Regulator & Valve Body To Bell	1

© Whatever It Takes Transmission Parts. Inc.

PART #	HARD PARTS (Continued)	QTY.	REFERENCE #
60795A	Nut, AK/AS/F4/L4/CA/K4/P1 Main Shaft (Left Hand Threads)	1	271007
60795H	Nut, G4/L5/PL5X Mainshaft (Right Hand Threads)	1	237184
60796A	Nut, AK/AS/F4/CA Countershaft (.738"ID) (Right Hand Threads)	1	73679
60796E	Nut, F4/K4/L4/P1 Countershaft (.845"ID) (Right Hand Threads)	1	
60796H	Nut, G4/L5 Countershaft (.845"ID) (Left Hand Threads)	1	
60796Y	Nut, L5/PL5X Countershaft (.940"ID) (Left Hand Threads)	1	
60800A	Gear, AK/AS Low Mainshaft (21 Teeth)	1	
60800C	Gear, F4/K4 Low Mainshaft (17 Teeth) (41 Teeth Hub)	1	
60800D	Gear, CA Low Mainshaft (18 Teeth) (1 Groove) (Uses 60251A Bearing)	1	
60800G	Gear, L4/P1 Low Mainshaft (17 Teeth) (38 Teeth Hub)	1	
60800H	Gear, G4 Low Mainshaft (17 Teeth) (1 Groove)	1	
60800HA	Gear, G4 Low Mainshaft (17 Teeth) (No Groove)	1	
60800LB	Gear, MY8A Low Mainshaft (18 Teeth) (1 Groove) (Uses 60251G Bearing)	1	
60800Y	Gear, L5/PL5X Low mainshaft (17 Teeth) (1 Groove)	1	
60800YA	Gear, L5 Low Mainshaft (17 Teeth) (2 Groove)	1	
60801A	Gear, AK/AS Low Countershaft (50 Teeth)	1	
60801C	Gear, F4 Low Countershaft (43 Teeth)	1	
60801D	Gear, CA Low Countershaft (45 Teeth) (Civic)	1	
60801DA	Gear, CA Low Countershaft (46 Teeth) (1.415"ID)	1	
60801E	Gear, K4 Low Countershaft (45 Teeth) (4 Groove)	1	
60801EC	Gear, PY8A Low Countershaft (44 Teeth) (No Groove)	1	
60801G	Gear, P1 Low Countershaft (46 Teeth) (1.380"ID)	1	
60801H	Gear, G4 Low Countershaft (45 Teeth)	1	
60801L	Gear, L4 Low Countershaft (45 Teeth) (2.934"ID Race)	1	
60801LB	Gear, MY8A Low Countershaft (49 Teeth) (1 Groove)	1	
60801Y	Gear, L5/PL5X Low Countershaft (45 Teeth)	1	
60803A	Gear, AK/AS 2nd Mainshaft (25 Teeth)	1	23431-PC9-010
60803B	Gear, AS 2nd Mainshaft (26 Teeth)	1	
60803C	Gear, F4 2nd Mainshaft (27 Teeth) (.611" Thick) (1 Groove) (For Thick Hub Drum)	1	23431-PF4-020
60803CA	Gear, F4 2nd Mainshaft (27 Teeth) (.631" Thick) (For Thin Hub Drum)	1	
60803D	Gear, L4/CA/P1 2nd Mainshaft (25 Teeth) (.531" Thick)	1	23431-PH0-670
60803E	Gear, K4 2nd Mainshaft (27 Teeth) .631" Thick (1 Groove)	1	23431-PF4-010
60803EA	Gear, K4 2nd Mainshaft (27 Teeth) .619" Thick (2 Groove)	1	23431-PF4-932
60803EC	Gear, PY8A 2nd Mainshaft (28 Teeth) .611" Thick (3 Groove)	1	
60803ED	Gear, PY8A 2nd Mainshaft (28 Teeth) (1 Groove)	1	
60803H	Gear, G4 2nd Mainshaft (27 Teeth) (.746" Thick) (2 Groove) (For Thick Hub Drum)	1	
60803HA	Gear, G4 2nd Mainshaft (27 Teeth) (.766" Thick) (2 Groove) (For Thick Hub Drum)	1	23431-PG4-610
60803HB	Gear, G4/L5/PL5X 2nd Mainshaft (27 Teeth) (.726" Thick) (1 Groove) (For Thick Hub Drum)	1	258659
60803HC	Gear, G4/L5/PL5X 2nd Mainshaft (27 Teeth) (.766" Thick) (No Groove) (For Thick Hub Drum)	1	
60803HD	Gear, G4 2nd Mainshaft (28 Teeth) (.746" Thick) (3 Groove) (For Thick Hub Drum)	1	
60803LB	Gear, MY8A 2nd Mainshaft (28 Teeth) (.531" Thick) (1 Groove)	1	
60804A	Gear, AK/AS 2nd Countershaft (39 Teeth)	1	33441-PC9-000
60804C	Gear, F4 2nd Countershaft (40 Teeth) (4.140"OD) (No Groove)	1	
60804D	Gear, CA 2nd Countershaft (39 Teeth) (2 Narrow Grooves)	1	
60804E	Gear, K4 2nd Countershaft (39 Teeth) (4.115"OD) (No Grooves)	1	
60804EA	Gear, PY8A 2nd Countershaft (39 Teeth) (3 Groove)	1	
60804EC	Gear, PY8A 2nd Countershaft (40 Teeth) (2 Groove)	1	
60804G	Gear, L4/P1 2nd Countershaft (39 Teeth) (2 Wide Groove)	1	
60804H	Gear, G4 2nd Countershaft (42 Teeth) (No Groove)	1	
60804HA	Gear, G4 2nd Countershaft (42 Teeth) (2 Groove)	1	
60804HD	Gear, G4 2nd Countershaft (41 Teeth) (3 Groove)	1	
60804LB	Gear, MY8A 2nd Countershaft (42 Teeth) (1 Groove)	1	
60804Y	Gear, L5/PL5X 2nd Countershaft (42 Teeth)	1	
60807A	Gear, AK/AS 3rd Countershaft (32 Teeth)	1	23451-PC9-000
60807AA	Gear, AS 3rd Countershaft (33 Teeth) (3.475"OD) (1985 SE)	1	23451-PC9-930
60807C	Gear, F4/K4 3rd Countershaft (34 Teeth) (.746" Thick) (3 Clutch)	1	23015-PF4-305
60807CA	Gear, F4/K4 3rd Countershaft (34 Teeth) (.786" Thick) (3 Clutch)	1	
60807CB	Gear, F4/K4 3rd Countershaft (35 Teeth)	1	23451-PF4-951
60807D	Gear, CA 3rd Countershaft (33 Teeth) (3.395"OD)	1	23451PHO-000
60807G	Gear, L4/P1 3rd Countershaft (37 Teeth) (No Groove)	1	
60807GA	Gear, L4/P1 3rd Countershaft (37 Teeth) (2 Groove)	1	
60807GB	Gear, L4/P1 3rd Countershaft (37 Teeth) (2 Wide Grooves)	1	
60807H	Gear, G4 3rd Countershaft (34 Teeth) (4 Clutch)	1	23451-PG4-000
60807Y	Gear, L5/PL5X 3rd Countershaft (36 Teeth)	1	
60809A	Gear, AK/AS 4th Mainshaft (36 Teeth)	1	
60809AA	Gear, AK/AS Mainshaft (37 Teeth) (1 Groove) (2.125" Tall)	1	
60809B	Gear, AS 4th Mainshaft (39 Teeth) (38 Teeth Hub)	1	
60809BA	Gear, AS 4th Mainshaft (37 Teeth) (No Groove) (1985 SEI)	1	23461-PC9-000

© Whatever It Takes Transmission Parts. Inc.

60809BB	Gear, AS 4th Mainshaft (37 Teeth) (1 Groove) (2.325” Tall) (1985 SEI)	1	
60809C	Gear, F4/K4 4th Mainshaft (40 Teeth) (2 Groove) (4.074”OD Hub)	1	
60809CA	Gear, F4/K4 4th Mainshaft (40 Teeth) (No Groove) (4.010”OD Hub)	1	
60809CB	Gear, F4 4th Mainshaft (39 Teeth) (41 Teeth Hub)	1	23461-PF4-950
60809D	Gear, CA 4th Mainshaft (36 Teeth)	1	
60809G	Gear, P1 4th Mainshaft (44 Teeth)	1	
60809H	Gear, G4 4th Mainshaft (41 Teeth) (No Groove)	1	
60809HA	Gear, G4 4th Mainshaft (43 Teeth) (1 Wide Groove)	1	
60809L	Gear, L4/P1 4th Mainshaft (41 Teeth) (2 Wide Grooves) (38 Teeth Hub)	1	
60809LA	Gear, L4 4th Mainshaft (41 Teeth) (No Groove) (38 Teeth Hub)	1	
60809Y	Gear, L5/PL5X 4th Mainshaft (41 Teeth) (4.257”OD Hub)	1	
60810B	Gear, AS 4th Countershaft (26 Teeth)	1	23471-PC9-830
60810BA	Gear, AS 4th Countershaft (28 Teeth, Right Angled) (1985 SEI)	1	23471-PC9-010
60810C	Gear, AK/F4 4th Countershaft (28 Teeth, Right Angled) (1 Groove) (2.940”OD)	1	23471-PF4-640
60810CA	Gear, F4/K4 4th Countershaft (29 Teeth, Right Angled) (3 Grooves) (Prelude)	1	23471-PF4-950
60810CB	Gear, F4 4th Countershaft (28 Teeth, Right Angled) (2.940”OD) 1989	1	23471-PF4-L00
60810D	Gear, CA 4th Countershaft (28 Teeth, Right Angled)	1	23471-PHO-671
60810DA	Gear, CA 4th Countershaft (27 Teeth) (Civic CRX)	1	23471-PHO-010
60810E	Gear, K4 4th Countershaft (29 Teeth, Right Angled) (No Groove)	1	23471-PF4-000
60810G	Gear, P1 Countershaft (31 Teeth) (No Groove)	1	
60810GA	Gear, L4/P1 4th Countershaft (32 Teeth) (1 Groove)	1	23471-PL4-850
60810GB	Gear, L4/P1 4th Countershaft (32 Teeth) (1 Groove) (The Teeth On The Selector Are Pointed Teeth)	1	
60810GC	Gear, L4/P1 4th Countershaft (32 Teeth) (2 Wide Grooves) (The Teeth On The Selector Are Pointed Teeth)	1	
60810GD	Gear, L4/P1 4th Countershaft (32 Teeth) (2 Wide Grooves) (The Teeth On The Selector Are Angled To 1 Side)	1	
60810H	Gear, G4 4th Countershaft (28 Teeth, Left Angled)	1	23471-PG4-000
60810L	Gear, L4 4th Countershaft (31 Teeth) (2 Groove)	1	23471-PL4-900
60810Y	Gear, L5 4th Countershaft (29 Teeth, Left Angled) (No Groove)	1	
60810YA	Gear, L5/PL5X 4th Countershaft (29 Teeth, Right Angled) (3 Groove)	1	
60810YB	Gear, L5/PL5X 4th Countershaft (29 Teeth, Left Angled) (3 Groove)	1	
60816A	Gear, AK/AS Reverse Countershaft (43 Teeth) (1 Groove)	1	23531-PC9-000
60816C	Gear, F4/K4 Reverse Countershaft (40 Teeth) (4.156”OD)	1	23531-PF4-000
60816D	Gear, CA/L4/P1 Reverse Countershaft (43 Teeth) (No Groove)	1	23531-PHO-000
60816H	Gear, G4 Reverse Countershaft (40 Teeth) (4.276”OD) (1.495”ID)	1	
60816Y	Gear, L5/PL5X Reverse Countershaft (40 Teeth) (4.276”OD) (1.535”ID)	1	
60818A	Gear, AK/AS/L4/CA/P1 Reverse Idler (27 Teeth)	1	
60818C	Gear, F4/K4/G4/L5/PL5X Reverse Idler (24 Teeth)	1	
60819A	Pin, AK Reverse Idler	1	
60819B	Pin, AS Reverse Idler	1	
60819C	Pin, F4 Reverse Idler	1	
60819D	Pin, CA Reverse Idler	1	
60819E	Pin, K4 Reverse Idler	1	
60819G	Pin, P1 Reverse Idler	1	
60819H	Pin, G4 Reverse Idler	1	
60819J	Pin, PL5X Reverse Idler	1	
60819L	Pin, L4 Reverse idler	1	
60819Y	Pin, L5 Reverse Idler	1	
60820A	Bracket, AK Reverse Idler	1	
60820B	Bracket, AS Reverse Idler	1	
60820C	Bracket, F4 Reverse Idler	1	
60820D	Bracket, CA Reverse Idler	1	
60820E	Bracket, K4 Reverse Idler	1	
60820G	Bracket, P1 Reverse Idler	1	
60820H	Bracket, G4 Reverse Idler	1	
60820J	Bracket, PL5X Reverse Idler	1	
60820L	Bracket, L4 Reverse Idler	1	
60820Y	Bracket, L5 Reverse Idler	1	
60830A	Selector, AK/AS/F4/CA/Some L4/P1 Reverse (Countershaft) (2.200”OD Where Fork Rides) (Has Angled Teeth On Both Sides)	1	23565-PC9-000
60830C	Selector, F4/K4 Reverse (Countershaft) (2.275”OD Where Fork Rides) (Has Angled Teeth On Both Sides)	1	23565-PF4-000
60830CA	Selector, F4/K4 Reverse (Countershaft) (2.275”OD Where Fork Rides) (Has Left Angled Teeth On Reverse Side, Pointed Teeth On 4th Side)	1	23565-PF4-L03
60830G	Selector, Some P1 Reverse (Countershaft) (2.200”OD Where Fork Rides) (Has Angled Teeth on Reverse Side & Pointed Teeth On 4th Side)	1	23565-PC9-830
60830H	Selector, G4 Reverse (Countershaft) (2.275”OD Where Fork Rides) (Has 12 Teeth Angled On Both Sides)	1	23565-PG4-000
60830J	Selector, PL5X Reverse (Countershaft)	1	

© Whatever It Takes Transmission Parts. Inc.

PART #	HARD PARTS (Continued)	QTY.	REFERENCE #
60830L	Selector, L4/MY8A Reverse (Countershaft) (2.275"OD Fork Groove) (Angled Teeth On Reverse Side, Pointed Teeth On 4th Side)	1	23565-PP6-010
60830Y	Selector, L5 Reverse (Countershaft) (2.275"OD Where Fork Rides) (Has 24 Angled Teeth On Both Sides)	1	
60830YA	Selector, L5 Reverse (Countershaft) (2.275"OD Where Fork Rides) (Has Right Angled Teeth On Reverse Side, Pointed Teeth On 4th Side)	1	
60835A	Hub, AK/AS Reverse (Countershaft)	1	23566-PC9-000
60835C	Hub, F4/K4/G4 Reverse (Countershaft)	1	23566-PF4-000
60835D	Hub, CA/L4/P1 Reverse (Countershaft)	1	23566-PH0-000
60835Y	Hub, L5/PL5X Reverse (Countershaft) (27 Splines)	1	
60835YA	Hub, L5/PL5X Reverse (Countershaft) (25 Splines)	1	
60840A	Shift Fork, AK/AS (1 1/8" Wide Shaft)	1	24111-PC9-000
60840C	Shift Fork, F4 (Cast # F4) (Uses 2.200" Selector)	1	24111-PF4-010
60840CA	Shift Fork, F4 (Cast # F4) (Uses 2.275" Selector)	1	24111-PF4-020
60840CB	Shift Fork, F4 (Cast # F4L) (Uses 2.275" Selector)	1	24111-PF4-L02
60840D	Shift Fork, CA (3/4" Wide At Shaft)	1	24111-PH0-000
60840E	Shift Fork, K4 (Cast # K4)	1	24111-PK4-000
60840EC	Shift Fork, PY8A (Cast # Y8)	1	
60840H	Shift Fork, G4 (Cast # G4)	1	
60840L	Shift Fork, L4/P1 (Cast # L4)	1	24111-PL4-000
60840LA	Shift Fork, L4 (Cast # P6)	1	24111-PP6-010
60840Y	Shift Fork, L5 (Cast # JO)	1	
60840YA	Shift Fork, L5 (Cast # L5)	1	
60840YB	Shift Fork, L5/PL5X (Cast # OZ)	1	
60850A	Cushion, AK (Sets On Piston)	4	
60850B	Cushion, AS/CA/L4/P1 (110mm) (Sets On Piston)	4	
60850C	Cushion, F4/K4/G4/L5/PL5X 1st/2nd/3rd/4th (4.200"OD) (.078" Thick) (Waved Replaces Beveled Cushion)	4	222098
60861A	Snap Ring, AK Holds Pressure Plate In Drum	4	
60861B	Snap Ring, AS/CA/L4/P1 Holds Pressure Plate In Drum	4	
60861C	Snap Ring, F4/K4/G4/L5/PL5X Holds Pressure Plate In Drum	4	
60862C	Snap Ring, AK/AS/F4/G4/CA/P1/L4/L5/PL5XHolds Low, 3rd & 4th Clutch Retainer In	1-3	
60870A	Snap Ring, AK/AS/CA/L4/P1 Holds Bearing In Stator (Front)	1	
60870C	Snap Ring, F4/K4/PY8A/G4/L5/PL5X Holds Bearing In Stator	1	
60872A	Snap Ring, AK/AS/F4/G4/CA/P1/L4 2nd Clutch (Thin Hub In Drum)	1	90603-P24-A01
60872C	Snap Ring, F4/K4/G4/L5/PL5X 2nd Clutch (Thick Hub Drum)	1	90603-PG4-000
60879C	Snap Ring, F4/K4/G4/L5/PL5X Holds Caged Bearing To Mainshaft	1	
60880A	Snap Ring, AK/AS/CA/L4/P1 Holds Caged Bearing On Mainshaft	1	
60881A	Wire Snap Ring, AK/AS/F4/K4/CA/L4/P1/G4/L5/PL5X Mainshaft	1	90613-PA9-000
60883A	Snap Ring, AK/AS Holds Mainshaft Bearing To Case	1	
60883C	Snap Ring, F4/K4/G4/L5 Holds Mainshaft Ball Bearing To Case	1	
60883D	Snap Ring, CA/L4/P1 Holds Mainshaft Bearing To Case	1	
60883J	Snap Ring, PL5X Holds Mainshaft Bearing To Case	1	
60884A	Snap Ring, AK/AS/CA Holds Countershaft Bearing To Case	1	
60884C	Snap Ring, F4/K4 Holds Countershaft Bearing With 2.670"OD To Case	1	
60884CA	Snap Ring, F4/K4/G4/L5 Holds Countershaft Bearing With 2.952"OD To Case	1	
60884D	Snap Ring, G4/L4/P1 Holds Countershaft Bearing With 2.520"OD To Case	1	
60884DA	Snap Ring, CA Holds Countershaft Bearing With Cast # OIN To Case	1	
60884J	Snap Ring, PL5X Holds Countershaft Bearing With 2.950"OD To Case	1	
60884Y	Snap Ring, L5 Holds Countershaft Bearing With 2.935"OD To Case	1	
60887A	Split Washer, AK/AS/F4/K4/CA/L4/P1/G4/L5/PL5X (Horse Shoe) 2 Per Pack	1	90431-PC9-000
60900A	Servo Body Assembly, AK	1	
60900B	Servo Body Assembly, AS	1	
60900C	Servo Body Assembly, F4 (Cast # PF4)	1	
60900CA	Servo Body Assembly, F4 (Cast # PF4X)	1	
60900CB	Servo Body Assembly, F4 (Cast # PF4Y)	1	
60900D	Servo Body Assembly, CA	1	
60900E	Servo Body Assembly, K4	1	
60900EB	Servo Body Assembly, PY8A (Cast # PY8)	1	
60900G	Servo Body Assembly, P1	1	
60900H	Servo Body Assembly, G4	1	
60900J	Servo Body Assembly, PL5X	1	
60900L	Servo Body Assembly, L4	1	
60900Y	Servo Body Assembly, L5	1	
60924A	Regulator, AK	1	
60924B	Regulator, AS	1	
60924C	Regulator, F4 (Carburated) (Cast # PF4)	1	
60924CA	Regulator, F4 (Fuel Injected) 1988-89 (Accord) (Cast # PF4B)	1	

© Whatever It Takes Transmission Parts. Inc.

60924CB	Regulator, F4 (Fuel Injected) 1986-87 (Accord & Prelude) (Cast # PF4B)	1	
60924D	Regulator, CA	1	
60924E	Regulator, K4	1	
60924G	Regulator, P1	1	
60924H	Regulator, G4	1	
60924L	Regulator, L4	1	
60924Y	Regulator, L5/PL5X	1	
60960A	Piston, AK 2nd Clutch	1	
60960B	Piston, AS/CA 2nd Clutch (1.590”ID)	1	
60960C	Piston, F4/G4 2nd Clutch (1.590”ID)	1	
60960CA	Piston, F4/K4/G4/L5/PL5X 2nd Clutch (4.550”OD)(1.700”ID)	1	
60960D	Piston, CA/L4/P1 2nd Clutch (1.665”ID)	1	
60962A	Piston, AK Low/3rd/4th Clutch	1-3	
60962B	Piston, AS/CA/P1/L4 Low/3rd/4th Clutch	1-3	
60962C	Piston, F4/K4/G4/L5/PL5X Low/3rd/4th Clutch	1-3	
60970A	Spring, AK/AS/CA/F4/G4 2nd Clutch (For Thin Hub Drum) (CA Civic & CA Integra With Tag # Up To #1290173)	1	
60970C	Spring, F4/K4/G4/L5/PL5X 2nd Clutch (For Thick Hub)	1	22541-PG4-004
60970D	Spring, CA/L4/P1 2nd Clutch (CA Civic & CA Integra With Tag #1290174 Or Up)	1	
60972C	Spring, AK/AS/F4/K4/CA/P1/L4/G4/L5/PL5X Low/3rd/4th Clutch	1-3	
60980A	Retainer, AK/AS/F4/CA/G4 2nd Clutch (For Thin Hub Drum) (CA Civic & CA Integra With Tag # Up To 1290173)	1	22542-PA9-000
60980CA	Retainer, F4/K4/G4/L5/PL5X 2nd Clutch (For Thick Hub Drum)	1	22542-PG4-000
60980D	Retainer, CA/L4/P1 2nd Clutch (CA Civic & CA Integra With Tag # 1290174 Or Up)	1	
60982C	Retainer, AK/AS/F4/K4/CA/P1/L4/G4/L5/PL5X Low/3rd/4th Clutch	1-3	
60991A	Shift Rod, AK Internal	1	
60991B	Shift Rod, AS Internal	1	
60991C	Shift Rod, F4 Internal	1	
60991D	Shift Rod, CA Internal	1	
60991E	Shift Rod, K4 Internal	1	
60991G	Shift Rod, P1 Internal	1	
60991H	Shift Rod, G4 Internal	1	
60991J	Shift Rod, PL5X Internal	1	
60991L	Shift Rod, L4 Internal	1	
60991Y	Shift Rod, L5 Internal	1	
60995A	Park Pawl Assembly, AK	1	
60995B	Park Pawl Assembly, AS	1	
60995C	Park Pawl Assembly, F4	1	
60995D	Park Pawl Assembly, CA	1	
60995E	Park Pawl Assembly, K4	1	
60995G	Park Pawl Assembly, P1	1	
60995H	Park Pawl Assembly, G4	1	
60995J	Park Pawl Assembly, PL5X	1	
60995L	Park Pawl Assembly, L4	1	
60995Y	Park Pawl Assembly, L5	1	
60996A	Fitting, AK/AS/F4/CA/L4/P1/G4/L5/Pl5X (3 3/4” Long) (Screws In Bell By Differential, Uses A Hose With Clamp)	1	
60999B	Tube Set, AS (Valve Body & Accumulator) (3 Tubes)	1	
60999E	Tube Set, K4/PY8A (Valve Body & Accumulator) (3 Tubes)	1	
60999L	Tube Set, L4/MY8A (Valve Body & Accumulator) (3 Tubes)	1	

© Whatever It Takes Transmission Parts. Inc.

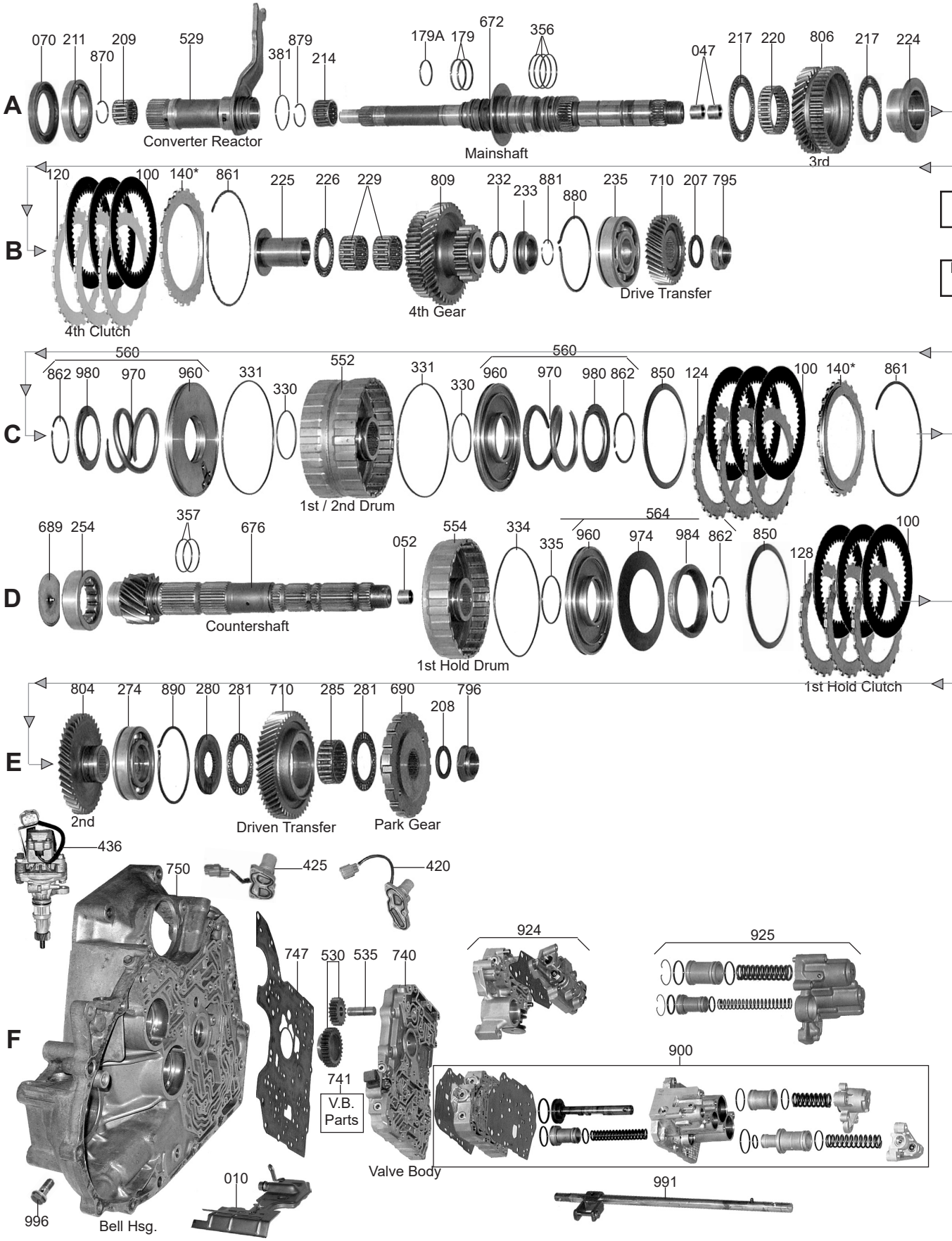

© Whatever It Takes Transmission Parts. Inc.

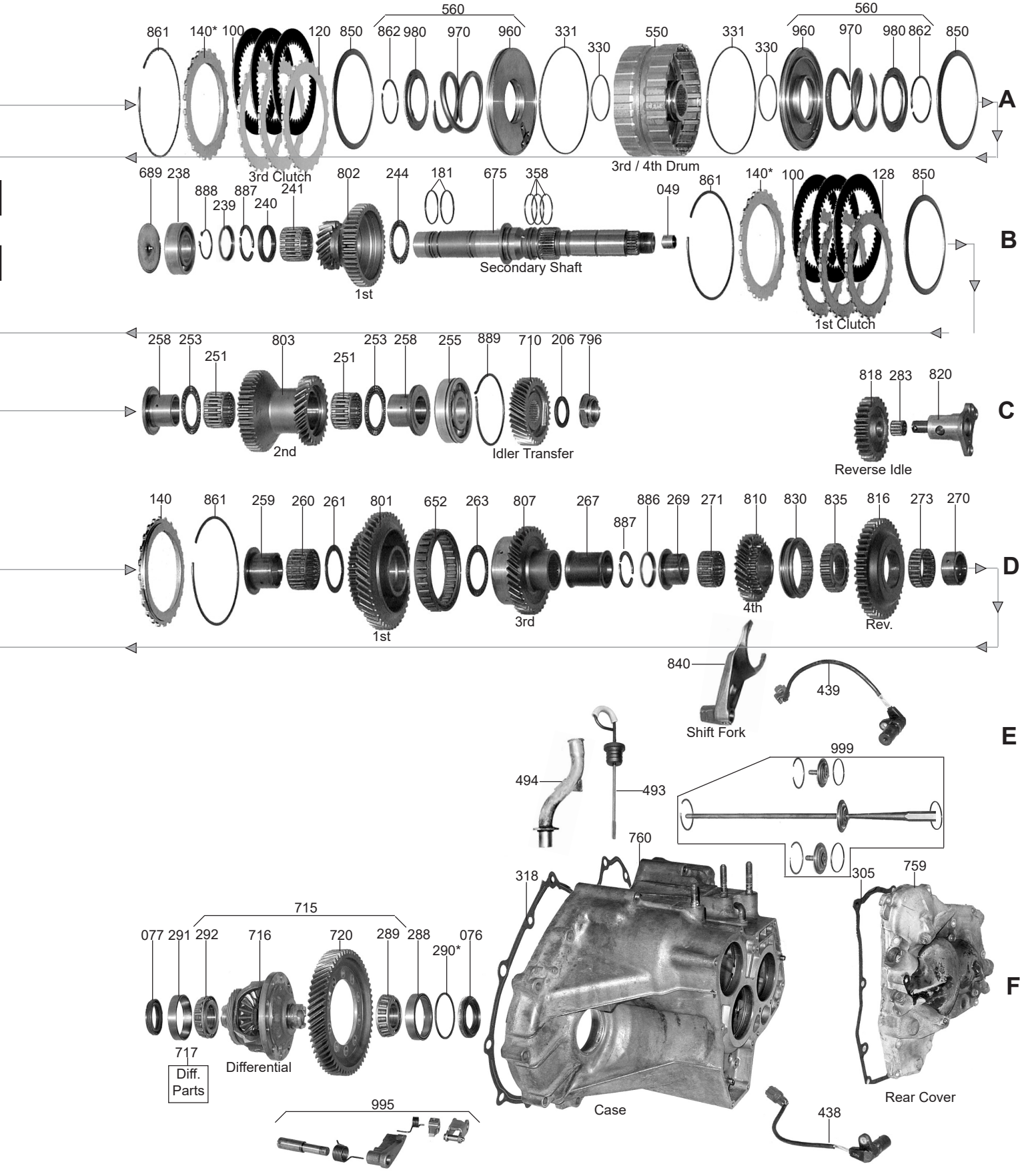

1-800-940-0197

© Whatever It Takes Transmission Parts. Inc.

PART #	PAPER & RUBBER KIT	QTY.	REFERENCE #
80000A	Paper & Rubber Kit, PX4B/AOYA/APXA/APX4/A6VA/BOYA/MP1A/MPOA/MPWA (Accord)/MPXA 1990-97 (Accord 1990-97) (Prelude 1992-96) (Odyssey 1995-97) (Acura 2.2 CL 1997) (Isuzu Oasis 1995-97 & 1999)	1	

PART #	OVERHAUL KITS	QTY.	REFERENCE #
80002A	Overhaul Kit, PX4B/APXA/APX4/AOYA/A6VA/BOYA/MPJA/MPOA/MPWA (Accord)/MPXA/MP1A 1990-97	1	
	(Isuzu Oasis 1995-97 & 1999)	1	

PART #	MASTER L/STEEL KIT	QTY.	REFERENCE #
80004A	Master L/Steels Kit, PX4B/APXA/APX4/AOYA/A6VA/BOYA/MPJA/MPOA/MPWA (Accord)/MPXA/MP1A 1990-97	1	

PART #	MASTER W/STEEL KIT	QTY.	REFERENCE #
80006A	Master W/Steels Kit, PX4B/APXA/APX4/AOYA/A6VA/BOYA/MPJA/MPOA/MPWA (Accord)/MPXA/MP1A 1990-97	1	

PART #	FILTER	QY.	REFERENE #
80010	Filer, PX4B 199-91	1	
80010A	Filter, AOYA/APXA/APX4/A6VA/BOYA/MP1A/MPJA/MPOA/MPXA	1	

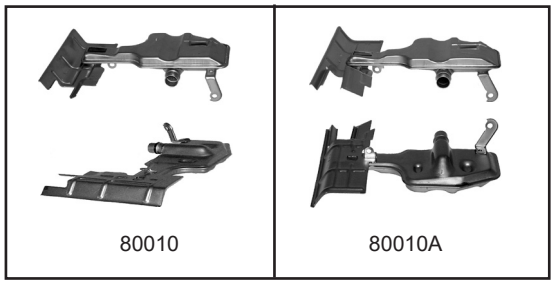

80010 80010A

70018C	Screen, PX4B/AOYA/APXA/APX4/A6VA/BOYA/MPJA/MPOA/MPWA/MPXA (Some) (In Valve Body) (.570"OD) (.125" Thick Rubber Boot)	1	
70018CA	Screen, PX4B/AOYA/APXA/APX4/A6VA/BOYA/MPJA/MPOA/MPWA/MPXA (Some) (In Valve Body) (.662"OD) (.315" Thick Rubber Boot)	1	

PART #	BUSHINGS	QTY.	REFERENCE #
80030A	Bushing Kit, PX4B/AOYA/APXA/APX4/A6VA/BOYA/MP1A/MPOA/MPWA (3 Pieces)	1	
T-28999	Tool Set, Acura/Honda (22 Pieces)(Bushing Remover & Installer)(This Set Works For All Honda With Bushings)	1	

PART #	METAL CLAD SEALS	QTY.	REFERENCE #
60070A	Seal, PX4B/AOYA/APXA/APX4/A6VA/BOYA/MP1A/MPJA/MPOA//MPWA (Accord)/MPXA Converter (44x68x8mm) Counter Clockwise Helix	1	
60072	Seal, PX4B/AOYA/APXA/APX4/A6VA/BOYA/MP1A/MPJA/MPOA/MPWA (Accord)/MPXA Manual Shaft	1	91209-612003
80076	Seal, PX4B/AOYA/APXA/APX4/A6VA/BOYA/MP1A/MPJA/MPOA/MPWA (Accord)/MPXA Axle (Case Side) (40x66x9mm)	1	
60077H	Seal, APXA/APX4/AOYA/A6VA/BOYA/MP1A/MPJA/MPOA/MPWA (Accord)/MPXA/PX4B Axle (Bell Side) (40x56x9mm)	1	

PART #	FRICTION CLUTCH	QTY.	REFERENCE #
80100A	Friction, PX4B/AOYA/APXA/APX4/A6VA/ BOYA/MP1A/MPJA/MPOA/MPWA (Accord)/MPXA All Clutch Packs (.076) 44 Teeth (3 Frictions Each, Except MP1A Has 4 In 2nd Clutch Pack)	3-16	
80119S1	Friction Module, AOYA/APXA/BOYA/MPJA/MPXA/PX4B 1990-97 (Stage 1)	1	

© Whatever It Takes Transmission Parts. Inc.

PART #	STEEL CLUTCH	QTY.	REFERENCE #
80120A	Steel, AOYA/APXA/ BOYA/MP1A/MPJA/MPXA/PX4B/MPOA/A6VA (.091") 24 Teeth (3.70"ID)	3	6
80124	Steel, AOYA/APXA/BOYA/MPJA/MPXA/PX4B/MPOA/A6VA 2nd Clutch (.102") 24 Teeth (For MP1A Use 80128A)	3	
80128A	Steel, PX4B/APXA/APX4/MP1A/MPOA/MPWA (Accord)/MPXA 1st Hold Clutch (.079") 24 Teeth (Also Fits MP1A 2nd Clutch Takes 4 Steels)	3	7
80128AB	Steel, AOYA/BOYA/MPJA/A6VA 1st Clutch (.061") 24 Teeth	3	
80128B	Steel, PX4B/AOYA/APXA/BOYA/MP1A/MPJA/MPXA 1st Clutch (.070") 24 Teeth (Also Fits PX4B/APXA/MP1A/MPXA 1st Hold Clutch) (.009" Undersized To Adjust Clutch Pack)	3	

PART #	CLUTCH PRESSURE PLATES	QTY.	REFERENCE #
80140AA	Pressure Plate, PX4B/AOYA/APXA/APX4/A6VA/BOYA/MP1A/MPJA/MPOA/MPWA (Accord)/MPXA 1st/2nd/3rd/4th/1st Hold Clutch (#1) (.082") (24 Teeth)	1	5
80140AB	Pressure Plate, PX4B/AOYA/APXA/APX4/A6VA/BOYA/MP1A/MPJA/MPOA/MPWA (Accord)/MPXA1st/2nd/3rd/4th/1st Hold Clutch (#2) (.086") (24 Teeth)	1	5
80140AC	Pressure Plate, PX4B/AOYA/APXA/APX4/A6VA/BOYA/MP1A/MPJA/MPOA/MPWA (Accord)/MPXA 1st/2nd/3rd/4th/1st Hold Clutch (#3) (.090") (24 Teeth)	1	5
80140AD	Pressure Plate, PX4B/AOYA/APXA/APX4/A6VA/BOYA/MP1A/MPJA/MPOA/MPWA (Accord)/MPXA 1st/2nd/3rd/4th/1st Hold Clutch (#4) (.094") (24 Teeth)	1	5
80140AE	Pressure Plate, PX4B/AOYA/APXA/APX4/A6VA/BOYA/MP1A/MPJA/MPOA/MPWA (Accord)/MPXA 1st/2nd/3rd/4th/1st Hold Clutch (#5) (.098") (24 Teeth)	1	5
80140AF	Pressure Plate, PX4B/AOYA/APXA/APX4/A6VA/BOYA/MP1A/MPJA/MPOA/MPWA (Accord)/MPXA 1st/2nd/3rd/4th/1st Hold Clutch (#6) (.102") (24 Teeth)	1	5
80140AG	Pressure Plate, PX4B/AOYA/APXA/APX4/A6VA/BOYA/MP1A/MPJA/MPOA/MPWA (Accord)/MPXA 1st/2nd/3rd/4th/1st Hold Clutch (#7) (.106") (24 Teeth)	1	5
80140AH	Pressure Plate, PX4B/AOYA/APXA/APX4/A6VA/BOYA/MP1A/MPJA/MPOA/MPWA (Accord)/MPXA 1st/2nd/3rd/4th/1st Hold Clutch (#8) (.110") (24 Teeth)	1	5
80140AJ	Pressure Plate, PX4B/AOYA/APXA/APX4/A6VA/BOYA/MP1A/MPJA/MPOA/MPWA (Accord)/MPXA 1st/2nd/3rd/4th/1st Hold Clutch (#9) (.114") (24 Teeth)	1	5

PART #	OIL SEALING RINGS	QTY.	REFERENCE #
80175A	Ring Kit, PX4B/AOYA/APXA/APX4/A6VA/BOYA/MP1A/MPJA/MPOA/MPWA (Accord)/MPXA	1	

PART #	WASHERS & BEARINGS	QTY.	REFERENCE #
80206	Washer, PX4B/AOYA/APXA/APX4/A6VA/BOYA/MP1A/MPJA/MPOA/MPWA (Accord)/MPXA Under Secondary Shaft (Use 80207A)	1	
80207A	Washer, PX4B/AOYA/APXA/APX4/A6VA/BOYA/MP1A/MPJA/MPOA/MPWA (Accord)/MPXA Under Mainshaft, Secondary Shaft & Countershaft Nuts	1	3
80208	Washer, PX4B/AOYA/APXA/APX4/A6VA/BOYA/MP1A/MPJA/MPOA/MPWA (Accord)/MPXA Under Counter-Shaft (Use 80207A)	1	
80209	Caged Needle Bearing, PX4B/AOYA/APXA/APX4/A6VA/BOYA/MP1A/MPJA/MPOA/MPWA (Accord)/MPXA Stator (Front) (1.040"OD)	1	
80211	Ball Bearing, PX4B/AOYA/APXA/APX4/A6VA/BOYA/MP1A/MPJA/MPOA/MPWA (Accord)/MPXA Bell Housing To Converter (2.675"OD)	1	
80214	Caged Needle Bearing, AOYA/APXA/BOYA/MP1A/MPJA/MPXA/PX4B/MPOA/A6VA Mainshaft To Converter Reactor (Rear)(.820" Wide)(1.130"OD)	1	
80217	Thrust Bearing, PX4B/AOYA/APXA/APX4/A6VA/BOYA/MP1A/MPJA/MPOA/MPWA (Accord)/MPXA Mainshaft To 2nd Gear	1	
80220	Caged Needle Bearing, PX4B/AOYA/APXA/APX4/A6VA/BOYA/MP1A/MPJA/MPOA/MPWA (Accord)/MPXA Mainshaft To 2nd Gear (Inner)	1	
80224	Collar W/Race, APXA/PX4B 3rd Gear (Mainshaft)	1	
80224A	Collar W/Race, AOYA/A6VA/BOYA/MP1A/MPJA/MPOA/MPWA 3rd Gear (Mainshaft)	1	
80225	Collar W/Race, PX4B/AOYA/APXA/APX4/A6VA/BOYA/MP1A/MPJA/MPOA/MPWA (Accord)/MPXA 4th Gear (Mainshaft)	1	
80226	Thrust Bearing, PX4B/AOYA/APXA/APX4/A6VA/BOYA/MP1A/MPJA/MPOA/MPWA (Accord)/MPXA Collar To 4th Gear (Mainshaft) (Use 80253A)	1	
80229	Caged Needle Bearing, PX4B/AOYA/APXA/APX4/A6VA/BOYA/MP1A/MPJA/MPOA/MPWA (Accord)/MPXA 4th Gear (Inner) (Mainshaft)	2	
80232	Thrust Bearing, PX4B/AOYA/APX/AAPX4/A6VA/BOYA/MP1A/MPJA/MPOA/MPWA (Accord)/MPXA 4th Gear To Race (Mainshaft)	1	
80233	Race, PX4B/AOYA/APXA/APX4/A6VA/BOYA/MP1A/MPJA/MPOA/MPWA (Accord)/MPXA 4th Gear To Snap Ring (Mainshaft)	1	
80235	Ball Bearing, PX4B/AOYA/APXA/APX4/A6VA/BOYA/MP1A/MPJA/MPOA/MPWA (Accord)/MPXA Mainshaft To Case (Use 80255AA)	1	

© Whatever It Takes Transmission Parts. Inc.

PART #	WASHERS & BEARINGS (Continued)	QTY.	REFERENCE #
80238	Ball Bearing, PX4B/AOYA/APXA/APX4/A6VA/BOYA/MP1A/MPJA/MPOA/MPWA (Accord)/MPXA Bell Housing To Secondary Shaft (2.365”OD) (1.220”ID)	1	
80239	Race, PX4B/AOYA/APXA/APX4/A6VA/BOYA/MP1A/MPJA/MPOA/MPWA (Accord)/MPXA Snap Ring To Split Washer (Secondary Shaft)	1	
80240	Race, PX4B/AOYA/APXA/APX4/A6VA/BOYA/MP1A/MPJA/MPOA/MPWA (Accord)/MPXA Split Washer To 1st Gear (Secondary Shaft)	1	
80241	Caged Needle Bearing, PX4B/APXA/APX4/MP1A/MPWA (Accord)/MPXA 1st Gear To Mainshaft (23 Needles)	1	
80241A	Caged Needle Bearing, AOYA/A6VA/BOYA/MPJA/MPOA 1st Gear To Mainshaft (28 Needles)	1	
80244	Thrust Bearing, PX4B/AOYA/APXA/APX4/A6VA/BOYA/MP1A/MPJA/MPOA/MPWA (Accord)/MPXA 1st Gear To 1st/2nd Drum (Secondary Shaft)	1	
80251	Caged Needle Bearing, PX4B/APXA/APX4 2nd Gear To Rear Race (.945” Tall) (Secondary Shaft)	2	
80251A	Caged Needle Bearing, AOYA/A6VA/BOYA/MPJA/MPOA 2nd Gear To Rear Race (1.035” Tall) (Secondary Shaft)	2	
80251AA	Caged Needle Bearing, MP1A/MPWA (Accord)MPXA 2nd Gear To Rear Race (.925” Tall) (Secondary Shaft)	2	
80253	Thrust Bearing, PX4B/APXA/APX4 2nd Gear (Both Sides) (2.200”OD) (1.422”ID) (Secondary Shaft)	2	
80253A	Thrust Bearing, AOYA/A6VA/BOYA/MP1A/MPJA/MPOA/MPWA (Accord)/MPXA 2nd Gear (2.115”OD) Both Sides (Secondary Shaft) (Also Fits PX4B/AOYA/APXAAPX4/A6VA/BOYA/MP1A /MPJA/MPOA/MPWA (Accord) & MPXA Collar To 4th Gear (Mainshaft)	2-3	
80254	Caged Roller Bearing, PX4B/AOYA/APXAAPX4/A6VA/BOYA/MP1A/MPJA/MPOA/MPWA (Accord)/MPXA Bell Housing To Counter Shaft	1	
80255	Ball Bearing, APXA/PX4B Secondary Shaft To Case (1.140”ID)	1	
80255A	Ball Bearing, AOYA/A6VA/BOYA/MPJA/MPOA Secondary Shaft To Case (1.065”ID) (12 Balls)	1	
80255AA	Ball Bearing, MP1A/MPXA/MPOA/A6VA Secondary Shaft To Case (1.065”ID) (7 Balls)	1	
80258	Collar W/Race, PX4B/APXA/APX4 2nd Gear (Both Sides) (Secondary Shaft)	2	
80258A	Race, AOYA/A6VA/BOYA/MP1A/MPJA/MPOA/MPWA (Accord)/MPXA 2nd Gear To 1st/2nd Drum (.172” Thick) (With 2 Notches On ID) (Secondary Shaft)	1	
80258AA	Race, AOYA/A6VA/BOYA/MP1A/MPJA/MPOA/MPWA (Accord)/MPXA 2nd Gear To 1st/2nd Drum (.159” Thick) (With Splines On ID) (Secondary Shaft)	1	
80258AB	Race, AOYA/A6VA/BOYA/MP1A/MPJA/MPOA/MPWA (Accord)/MPXA 2nd Gear To 1st/2nd Drum (.161” Thick) (With Splines On ID) (Secondary Shaft)	1	
80258AC	Race, AOYA/A6VA/BOYA/MP1A/MPJA/MPOA/MPWA (Accord)/MPXA 2nd Gear To 1st/2nd Drum (.163” Thick) (With Splines On ID) (Secondary Shaft)	1	
80258AD	Race, AOYA/A6VA/BOYA/MP1A/MPJA/MPOA/MPWA (Accord)/MPXA 2nd Gear To 1st/2nd Drum (.165” Thick) (With Splines On ID) (Secondary Shaft)	1	
80258AE	Race, AOYA/A6VA/BOYA/MP1A/MPJA/MPOA/MPWA (Accord)/MPXA 2nd Gear To 1st/2nd Drum (.167” Thick) (With Splines On ID) (Secondary Shaft)	1	
80258AF	Race, AOYA/A6VA/BOYA/MP1A/MPJA/MPOA/MPWA (Accord)/MPXA 2nd Gear To 1st/2nd Drum (.169” Thick) (With Splines On ID) (Secondary Shaft)	1	
80258AG	Race, AOYA/A6VA/BOYA/MP1A/MPJA/MPOA/MPWA (Accord)/MPXA 2nd Gear To 1st/2nd Drum (.171” Thick) (With Splines On ID) (Secondary Shaft)	1	
80258AH	Race, AOYA/A6VA/BOYA/MP1A/MPJA/MPOA/MPWA (Accord)/MPXA 2nd Gear To 1st/2nd Drum (.173” Thick) (With Splines On ID) (Secondary Shaft)	1	
80258AJ	Race, AOYA/A6VA/BOYA/MP1A/MPJA/MPOA/MPWA (Accord)/MPXA 2nd Gear To 1st/2nd Drum (.175” Thick) (With Splines On ID) (Secondary Shaft)	1	
80259	Collar W/Race, PX4B/AOYA/APXAAPX4/A6VA/BOYA/MP1A/MPJA/MPOA/MPWA (Accord)/MPXA 1st Hold Drum To 1st Gear (1.375”ID) (Countershaft)	1	
80260	Caged Needle Bearing, PX4B/AOYA/APXAAPX4/A6VA/BOYA/MP1A/MPJA/MPOA/MPWA (Accord)/MPXA 1st Gear To Collar (Countershaft)	1	
80261	Race, PX4B/AOYA/APXAAPX4/A6VA/BOYA/MP1A/MPJA/MPOA/MPWA (Accord)/MPXA Caged Needle Bearing To Thrust Bearing (.057” Thick) (With 2 Notches On ID) (Countershaft)	1	
80263	Thrust Bearing, PX4B/AOYA/APXAAPX4/A6VA/BOYA/MP1A/MPJA/MPOA/MPWA (Accord)/MPXA 1st Gear To 3rd Gear (1.620”ID) (Countershaft)	1	
80267	Collar, PX4B/APXA/APX4 3rd Gear To 4th Gear (1.810” Long) (Countershaft)	1	
80267A	Collar, AOYA/A6VA/BOYA/MP1A/MPJA/MPOA/MPWA (Accord)/MPXA 3rd Gear To 4th Gear (1.560” Long) (Countershaft)	1	
80269	Collar W/Race, PX4B/APXA/APX4 4th Gear (.945” Thick) (Countershaft)	1	
80269A	Stepped Race, AOYAA6VA/BOYA/MP1A/MPJA/MPOA/MPWA (Accord)/MPXA 4th Gear (.310” Thick) (Countershaft)	1	
80270	Collar, PX4B/APXA/APX4 Reverse Gear (Countershaft)	1	
80271	Caged Needle Bearing, PX4B/APXA/APX4 4th Gear (.770” Thick) (Countershaft)	1	
80271A	Caged Bearing, AOYA/A6VA/BOYA/MP1A/MPJA/MPOA/MPWA (Accord)/MPXA 4th Gear (.935” Thick) (Countershaft)	1	
80273	Caged Needle Bearing, PX4B/AOYA/APXAAPX4/A6VA/BOYA/MP1A/MPJA/MPOA/MPWA (Accord)/MPXA Reverse Gear (.580” Thick) (Countershaft)	1	

© Whatever It Takes Transmission Parts. Inc.

80274	Ball Bearing, PX4B/APXA/APX4 Countershaft To Case (1.580”ID)	1
80274A	Ball Bearing, AOYA/A6VA/BOYA/MP1A/MPJA/MPOA/MPWA (Accord)/MPXA Countershaft To Case (1.140”ID)	1
80280	Race W/Inner Splines, PX4B/APXA/APX4 Driven Transfer Gear (Countershaft) (.155” Thick)	1
80280A	Race W/Inner Splines, AOYA/BOYA/MPJA Driven Transfer Gear (Countershaft) (.135” Thick)	1
80280AA	Race W/Inner Splines, A6VA/MP1A/MPOA/MPWA (Accord)/MPXA Driven Transfer Gear (Countershaft) (.138” Thick)	1
80281	Thrust Bearing, PX4B/AOYA/APXA/APX4/A6VA/BOYA/MP1A/MPJA/MPOA/MPWA (Accord)/MPXA Driven Transfer Gear (Both Sides) (Countershaft)	2
80283	Caged Needle Bearing, PX4B/APXA/APX4/MP1A/MPWA (Accord)/MPXA Reverse Idler (14 Needles)	1
80283A	Caged Bearing, AOYA/A6VA/BOYA/MPJA/MPOA Reverse Idler (12 Needles)	1
80285	Caged Needle Bearing, PX4B/AOYA/APXA/APX4/A6VA/BOYA/MP1A/MPJA/MPOA/MPWA (Accord)/MPXA Driven Transfer Gear (.730” Thick) (Countershaft)	1
80288	Cup Race, PX4B/AOYA/APXA/APX4/A6VA/BOYA/MP1A/MPJA/MPOA/MPWA (Accord)/MPXA Differential To Case	1
80289	Cone Bearing, PX4B/AOYA/APXA/APX4/A6VA/BOYA/MP1A/MPJA/MPOA/MPWA (Accord)/MPXA Differential To Case	1
80291	Cup Race, PX4B/AOYA/APXA/APX4/A6VA/BOYA/MP1A/MPJA/MPOA/MPWA (Accord)/MPXA Differential To Bell Housing	1
80292	Cone Bearing, PX4B/AOYA/APXA/APX4/A6VA/BOYA/MP1A/MPJA/MPOA/MPWA (Accord)/MPXA Differential To Bell Housing	1

PART #	GASKETS & RUBBER COMPONENTS	QTY.	REFERENCE #
80305	Gasket, PX4B Rear Cover (Can Use 80305A)	1	
80305A	Gasket, AOYA/APXA/APX4/A6VA/BOYA/MP1A/MPJA/MPOA/MPWA (Accord)/MPXA Rear Cover	1	
60313A	O-Ring, Honda Converter (OE Upgraded)(Fits On ConverterHub, Inside Of Drive Pump Gear)	1	
80318	Gasket, PX4B/AOYA/APXA/APX4/BOYA/MP1A/MPJA Bell Housing To Case	1	

PART #	TECHNICAL MANUALS	QTY.	REFERENCE #
80400	Technical Manual, PX4B/AOYA/APXA/APX4/A6VA/BOYA/MP1A/MPJA/MPOA/MPWA (Accord)/MPXA	1	
80401	Technical Manual On CD, AOYA/APXA/BOYA/MP1A/PX4B	1	

PART #	ELECTRICAL COMPONENTS	QTY.	REFERENCE #
80410D	Switch, MPJA Neutral Safety (On Rear Cover)	1	
30411E	Switch, MPJA 2nd & 3rd Clutch Pressure (Screws In Bell Housing)(Green Connector)(Flat) (38 PSI)	1	
80420	Solenoid Set, PX4B/AOYA/APXA/APX4/A6VA/BOYA/MP1A/MPJA/MPOA/MPWA (Accord)/MPXA Shift Solenoid (On Outside Of Bell At 3:00) (Aluminum Base Is 4 1/4”)	1	
80425	Dual Solenoid, AOYA/APXA/APX4/A6VA/BOYA/MP1A/MPJA/MPOA/MPWA (Accord)/MPXA/PX4B Lock-Up (On Outside Of Bell At 1:00) (Aluminum Base Is 3 1/2” Long) (W/2 Oval Shaped O-Rings) (Can Use 30425C)	1	
80436	Speed Sensor, PX4B/MP1A Vehicle (3 Prong Grey Connector & Wire Harness)	1	
80436A	Speed Sensor, AOYA/A6VA/BOYA/MPJA/MPOA Vehicle (3 Prong Black Connector) (No Wire Harness)	1	
80436AA	Speed Sensor, APXA Vehicle (3 Prong Black Connector) (No Wire Harness)	1	
80438	Speed Sensor, PX4B/AOYA/APXA/APX4/A6VA/BOYA/MP1A/MPJA/MPOA/MPWA (Accord)/MPXA (NC) (Grey Connector) (On Rear Cover)	1	
80439	Speed Sensor, PX4B/AOYA/APXA/APX4/A6VA/BOYA/MP1A/MPJA/MPOA/MPWA (Accord)/MPXA (NM) (Green Connector) (On Rear Cover)	1	

PART #	MISC. COMPONENTS	QTY.	REFERENCE #
80481	Spring Set, PX4B/APXA/MP1A/MPXA Reverse Idler Shaft (Contains: 2 Springs, 1 Check Ball, 1 Spring Cap)	1	
80485L	Dowel Pin, PX4B/AOYA/APXA/APX4/A6VA/BOYA/MP1A/MPJA/MPOA/MPWA (Accord)/MPXA Case To Bell To Regulator Or Servo Assembly	2	
80485S	Dowel Pin, PX4B/AOYA/APXA/APX4/A6VA/BOYA/MP1A/MPJA/MPOA/MPWA (Accord)/MPXA Valve Body	2	
30492A	Drain Plug, PX4B/AOYA/APXA/APX4/A6VA/BOYA/MP1A/MPJA/MPOA/MPWA (Accord)/MPXA	1	
80493	Dip Stick, PX4B/AOYA/APXA/APX4/A6VA/BOYA/MP1A/MPJA/MPOA/MPWA (Accord)/MPXA (7” Long)	1	
80496	Cooler Line, PX4B/AOYA/APXA/APX4/A6VA/BOYA/MP1A/MPJA/MPOA/MPWA (Accord)/MPXA (Metal) (7” Long) (Fitting Holds This To The Bell Housing)	1	

© Whatever It Takes Transmission Parts. Inc.

PART #	HARD PARTS	QTY.	REFERENCE #
80496A	Cooler Line, PX4B/AOYA/APXA/APX4/A6VA/BOYA/MP1A/MPJA/MPOA/MPWA (Accord)/MPXA (Metal) (20 1/2" Long) (Fitting Holds This To The Bell Housing)	1	
80529	Stator Tube, PX4B/AOYA/APXA/APX4/A6VA/BOYA/MP1A/MPJA/MPOA/MPWA (Accord)/MPXA (Cast # XL4 Or X4Y)	1	
60530C	Pump Gear Set, PX4B/AOYA/APXA/APX4/A6VA/BOYA/MP1A/MPJA/MPOA/MPWA (Accord)/MPXA (38 Spline Gear) 28 Teeth (.470" Thick)	1	
80535	Pin, PX4B/AOYA/APXA/APX4/A6VA/BOYA/MP1A/MPJA/MPOA/MPWA (Accord)/MPXA Pump Gear	1	
80550	Drum, PX4B/AOYA/APXA/APX4/A6VA/BOYA/MP1A/MPJA/MPOA/MPWA (Accord)/MPXA 3rd/4th Clutch	1	
80552	Drum, PX4B/AOYA/APXA/APX4/A6VA/BOYA/MPJA/MPOA/MPWA (Accord)/MPXA 1st/2nd Clutch	1	
80552A	Drum, MP1A 1st/2nd Clutch (Holds 4 Clutches In 2nd Clutch Pack)	1	
80554	Drum, PX4B/APXA/APX4/MP1A/MPXA 1st Hold Clutch (Machined Steel)	1	
80554A	Drum, AOYA/A6VA/BOYA/MPJA/MPOA 1st Hold Clutch (Stamped Steel)	1	
80560	Piston Kit, PX4B/AOYA/APXA/APX4/A6VA/BOYA/MP1A/MPJA/MPOA/MPWA (Accord)/MPXA 1st/2nd/3rd/4th Clutch	1-4	
80564	Piston Kit, PX4B/AOYA/APXA/APX4/A6VA/BOYA/MP1A/MPJA/MPOA/MPWA (Accord)/MPXA 1st Hold Clutch	1	
80652	Sprag, PX4B/AOYA/APXA/APX4/A6VA/BOYA/MP1A/MPJA/MPOA/MPWA (Accord)/MPXA (Use 80801)	1	
80672	Mainshaft, PX4B/APXA/APX4 (15 1/8" Long) (1.575"OD Where # 224 Rides)	1	
80672A	Mainshaft, AOYAA6VA/BOYA/MP1A/MPJA/MPOA/MPXA (15 1/8" Long) (1.530"OD Where #224 Rides)	1	
80675	Secondary Shaft, AOYA/A6VA/BOYA/MP1A/MPJA/MPOA/MPXA (.230" Thick Center Flange)	1	
80675A	Secondary Shaft, PX4B/APXA/APX4 (.170" Thick Center Flange)	1	
80676	Countershaft, MPXA (14 Teeth / No Groove) (6 Set Of Splines)	1	
80676A	Countershaft, PX4B/APXA (14 Teeth / No Groove) (7 Sets Of Splines)	1	
80676AA	Countershaft, MP1A (14 Teeth / 1 Groove In Center) (6 Sets Of Splines)	1	
80676AB	Countershaft, A6VA/MPJA (14 Teeth / 1 Groove By Bearing) (6 Sets Of Splines)	1	
80676AC	Countershaft, AOYA/BOYA/MPOA (15 Teeth / 1 Groove) (6 Sets Of Splines)	1	
80689A	Plate, PX4B/AOYA/APXA/APX4/A6VA/BOYA/MP1A/MPJA/MPOA/MPWA (Accord)/MPXA Oil (Sets In Bell Housing Under Pinion Bearing)	1	
80689AS	Plate, PX4B/AOYA/APXA/APX4/A6VA/BOYA/MP1A/MPJA/MPOA/MPWA (Accord)/MPXA Oil (Sets In Bell Housing Under Secondary Shaft Bearing)	1	
80690	Gear, PX4B/APXA/APX4/BOYA/MP1A/MPXA Park (Countershaft) With 2 Sets Of Splines (Can Use 80690A)	1	
80690A	Gear, AOYA/A6VA/MPJA/MPOA Park (Countershaft) With 1 Set Of Splines (Can Use 80690)	1	
80710AAK	Gear Set, AOYA/A6VA/BOYA/MPJA/MPOA Transfer (3 Gear Set) 1990-00 (36 Teeth Mainshaft, 52 Teeth Countershaft & 36 Teeth Secondary Shaft)	1	
80710ABK	Gear Set, MP1A/MPXA Transfer (3 Gear Set) 1990-00 (35 Teeth Mainshaft, 52 Teeth Countershaft & 35 Teeth Secondary Shaft)	1	
80710AK	Gear Set, PX4B/APXA Transfer (3 Gear Set) 1990-00 (35 Teeth Mainshaft, 51 Teeth Countershaft & 35 Teeth Secondary Shaft)	1	
80715	Differential Assembly, PX4B (60 Teeth / 2 Groove) (Silver Cross Pin)	1	
80715A	Differential Assembly, APXA/MPXA (60 Teeth / 2 Groove) (Gold Cross Pin)	1	
80715AA	Differential Assembly, AOYA/BOYA/MPOA (62 Teeth / 1 Groove Close To Center)	1	
80715AB	Differential Assembly, MP1A (62 Teeth / 1 Groove By Bearing)	1	
80715AC	Differential Assembly, MPJA (62 Teeth / 1 Groove By Speed-O Gear)	1	
80715E	Differential Assembly, A6VA (60 Teeth / No Groove) (Gold Cross Pin)	1	
60717H-8	Cross Pin, APXA/A6VA//MPXA Differential Spider Gear (Gold Colored)	1	
80740	Valve Body, PX4B/APXA (Cast # PX4) With Detent (Less Pump Gears)	1	
80740A	Valve Body, AOYA/A6VA/BOYA/MPJA/MPOA (Cast # POX) No Detent (Less Pump Gears)	1	
80740B	Valve Body, MP1A/MPXA (Cast # PX4Y) No Detent (Less Pump Gears)	1	

PART #	VALVE BODY COMPONENTS	QTY.	REFERENCE #
80741-1	Valve & Spring, PX4B/AOYA/APXA/APX4/A6VA/BOYA/MP1A/MPJA/MPOA/MPWA (Accord)/MPXA (Converter Check Valve) (In Valve Body)	1	
80747	Seperator Plate, PX4B/APXA/APX4/MP1A/MPXA (Valve Body)	1	
80747A	Seperator Plate, AOYA/A6VA/BOYA/MPJA/MPOA (Valve Body)	1	

PART #	HARD PARTS (Continued)	QTY.	REFERENCE #
80750	Bell Housing, PX4B	1	
80750A	Bell Housing, AOYA/A6VA/BOYA/MPOA	1	
80750AA	Bell Housing, APXA	1	

© Whatever It Takes Transmission Parts. Inc.

80750AB.....Bell Housing, MP1A.....1
80750AC.....Bell Housing, MPJA.....1
80750AD.....Bell Housing, MPXA.....1
80759.....Rear Cover, PX4B/APXA/APX4/MP1A/MPXA With Tubes (With 2 Threaded Holes For Tin Shield).....1
80759A.....Rear Cover, AOYA/A6VA/BOYA/MPOA With Tubes (No Threaded Holes For Tin Shield).....1
80759AA.....Rear Cover, MPJA With Tubes (No Threaded Holes Fro Tin Shield) Uses A Pressed In Ball Bearing.....1
80760.....Case, PX4B/AOYA/APXA/APX4/A6VA/BOYA/MP1A/MPJA/MPOA/MPXA (Units W/Out Ring Type Idler Gear Pin (#819) Will Retro Fit If Idler Assembly Is With Case).....1
80774.....Speed-O Housing & Power Steering Pump, PX4B/APXA/APX4/MP1A (19 Teeth) (W/Out Sensor Or Connector).....1
80774A.....Speed-O Housing, AOYA/BOYA (19 Teeth) (W/Out Sensor Or Electric Connector).....1
80774AA.....Speed-O Housing, MPJA (18 Teeth) (W/Out Sensor Or Electric Connector).....1
80774AB.....Speed-O Housing & Power Steering Pump, PX4B/MP1A (19 Teeth Gear) (With 3 Prong Grey Connector And Wire Harness).....1
80774AC.....Speed-O Housing & Power Steering Pump, APXA (19 Teeth Gear) (With 3 Prong Black Connector) (No Wires).....1
80774AD.....Speed-O Housing, AOYA/BOYA (19 Teeth Gear) (With 3 Prong Black Connector) (No Wire Harness).....1
80774AE.....Speed-O Housing, MPJA (18 Teeth Gear) (With 3 Prong Black Connector) (No Wire Harness).....1
80776K.....Bolt Set, PX4B/AOYA/APXA/APX4/A6VA/BOYA/MP1A/MPJA/MPOA/MPXA Case To Bell.....1
80780K.....Bolt Set, PX4B/AOYA/APXA/APX4/BOYA/MP1A/MPJA/MPXA Rear Cover.....1
80782K.....Bolt Set, PX4B/AOYA/APXA/APX4/A6VA/BOYA/MP1A/MPJA/MPOA/MPXA Valve Body To Bell (4 Bolts).....1
80783K.....Bolt Set, PX4B/AOYA/APXA/APX4/A6VA/BOYA/MP1A/MPJA/MPOA/MPXA 1-2 Accumulator Body (6 Bolts).....1
80784K.....Bolt Set, PX4B/AOYA/APXA/APX4/A6VA/BOYA/MP1A/MPJA/MPOA/MPXA Throttle & Regulator Body (8 Bolts).....1
80795.....Nut, PX4B/AOYA/APXA/APX4/A6VA/ BOYA/MP1A/MPJA/MPOA/MPXA (Mainshaft) (Left Hand Threads).....1
80795K.....Nut Set, PX4B/AOYA/APXA/APX4/A6VA/ BOYA/MP1A/MPJA/MPOA/MPXA (Mainshaft) (Nut & Washer).....1
80796.....Nut, PX4B/AOYA/APXA/APX4/A6VA/BOYA/MP1A/MPJA/MPOA/MPXA (Countershaft & Secondary Shaft) (Right Hand Thread).....1-2
80796K.....Nut Set, PX4B/AOYA/APXA/APX4/A6VA/BOYA/MP1A/MPJA/MPOA/MPXA (Countershaft & Secondary Shaft) (With Various Bolts, O-Rings & Rear Gasket).....1
80801.....Gear, PX4B/APXA/APX4/MP1A/MPXA 1st Hold (46 Teeth / No Groove) (With Sprag).....1
80801AD.....Gear, AOYA/A6VA/BOYA/MPJA/MPOA 1st Gear (52 Teeth / No Groove) (With Sprag).....1
80802.....Gear, PX4B/APXA/APX4 1st (17 Teeth / No Groove) (Secondary Shaft).....1
80802A.....Gear, MP1A/MPXA 1st (17 Teeth / 1 Groove) (Secondary Shaft).....1
80802AC.....Gear, AOYA/A6VA/BOYA/MPJA/MPOA 1st (19 Teeth / No Groove) (Secondary Shaft).....1
80803.....Gear, PX4B/APXA/APX4 2nd (28 Teeth) (1.660”ID) (Secondary Shaft).....1
80803A.....Gear, MP1A 2nd (28 Teeth / 1 Groove) (1.460”ID) (Secondary Shaft).....1
80803AA.....Gear, MPXA 2nd (29 Teeth / No Groove) (1.460”ID) (Secondary Shaft).....1
80803AC.....Gear, MPJA 2nd (30 Teeth / 3 Groove) (1.460”ID) (Secondary Shaft).....1
80803AE.....Gear, AOYA/A6VA/BOYA/MPOA 2nd (31 Teeth / No Groove) (Secondary Shaft).....1
80804.....Gear, PX4B/APXA/APX4 2nd (41 Teeth / No Groove) (Countershaft) (4 Slots).....1
80804AC.....Gear, MP1A 2nd (43 Teeth / 2 Groove) (Countershaft) (4 Slots).....1
80804AD.....Gear, MPXA 2nd (43 Teeth / No Groove) (Countershaft) (4 Slots).....1
80804AG.....Gear, AOYA/A6VA/BOYA/MPOA 2nd (43 Teeth / 1 Groove) (Countershaft).....1
80804AJ.....Gear, MPJA 2nd (47 Teeth / 2 Groove) (Countershaft).....1
80806.....Gear, MPXA 3rd (35 Teeth)(1 Groove)(Mainshaft).....1
80806A.....Gear, MP1A 3rd (35 Teeth)(2 Groove)(Mainshaft).....1
80806AA.....Gear, PX4B 3rd (35 Teeth)(No Groove)(Mainshaft).....1
80806AB.....Gear, APXA 3rd (35 Teeth)(3 Groove)(Mainshaft).....1
80806AG.....Gear, MPJA 3rd (37 Teeth)(3 Groove)(Mainshaft).....1
80806AJ.....Gear, AOYA/BOYA/MPOA/A6VA 3rd (38 Teeth)(No Groove)(Mainshaft).....1
80807.....Gear, PX4B/MPXA 3rd (36 Teeth / No Groove) (Countershaft).....1
80807AD.....Gear, APXA/APX4/MP1A 3rd (37 Teeth / 2 Groove) (Countershaft).....1
80807AG.....Gear, AOYA/A6VA/BOYA/MPOA 3rd (39 Teeth / No Groove) (Countershaft).....1
80807AJ.....Gear, MPJA 3rd (40 Teeth / 3 Groove) (Countershaft).....1
80809AA.....Gear, MP1A 4th (40 Teeth / No Groove) (Mainshaft).....1
80809AD.....Gear, MPJA 4th (41 Teeth / No Groove) (Mainshaft).....1
80809AE.....Gear, MPXA 4th (41 Teeth / 1 Groove) (Mainshaft).....1
80809AJ.....Gear, PX4B/AOYA/APXA/APX4/BOYA 4th (43 Teeth / 1 Groove) (Mainshaft).....1
80810A.....Gear, PX4B 4th (29 Teeth / 1 Groove) (1.655”ID) (Countershaft).....1
80810AA.....Gear, AOYA/A6VA/BOYA/MPOA 4th (29 Teeth / 1 Groove) (1.500”ID) (Countershaft).....1
80810AB.....Gear, PX4B/APXA/APX4 4th (29 Teeth / 2 Groove) (1.655”ID) (Countershaft).....1
80810AD.....Gear, MPXA 4th (29 Teeth / 2 Groove) (1.500”ID) (Countershaft).....1

© Whatever It Takes Transmission Parts. Inc.

PART #	HARD PARTS (Continued)	QTY.	REFERENCE #
80810AE	Gear, APXA 4th (30 Teeth / No Groove) (1.655”ID) (Countershaft)	1	
80810AG	Gear, MPJA 4th (30 Teeth / No Groove) (1.500”ID) (Countershaft)	1	
80810AJ	Gear, MP1A 4th (30 Teeth / 3 Groove) (1.500”ID) (Countershaft)	1	
80816	Gear, PX4B/APXA/APX4 Reverse (43 Teeth) (Countershaft) (Cast # PX4)	1	
80816A	Gear, MP1A/MPXA Reverse (Countershaft) 43 Teeth (Cast # PX4Y)	1	
80816AA	Gear, AOYA/BOYA/MPJA/MPOA/A6VA Reverse (43 Teeth) (Countershaft) (Cast # POX)	1	
80818	Gear, PX4B/APXA/APX4/MP1A/MPXA Reverse Idler (27 Teeth / .590” Thick)	1	
80818A	Gear, AOYA/A6VA/BOYA/MPJA/MPOA Reverse Idler (27 Teeth / .500” Thick)	1	
80819	Pin, PX4B/APXA/APX4/MP1A/MPXA Reverse Idler (1.760” Long) (.550”OD) (No O-Rings Grooves)	1	
80819A	Pin, AOYA/A6VA/BOYA/MPJA/MPOA Reverse Idler (1.705” Long) (.590”OD) (With 2 O-Ring Grooves)	1	
80820	Bracket, PX4B/APXA/APX4/MP1A/MPXA Reverse Idler (.550”ID) (2 Hole Flange)	1	
80820A	Bracket, AOYA/A6VA/BOYA/MPJA/MPOA Reverse Idler (.580”ID)	1	
80820AA	Bracket, PX4B/APXA/APX4/MP1A/MPXA Reverse Idler (.550”ID) (3 Hole Flange)	1	
80830	Selector, PX4B/AOYA/APXA/APX4/A6VA/BOYA/MP1A/MPJA/MPOA/MPXA Reverse (Countershaft)	1	
80835	Hub, PX4B/AOYA/APXA/APX4/A6VA/BOYA/MP1A/MPJA/MPOA/MPXA Reverse Selector (Countershaft)	1	
80840	Shift Fork, PX4B/AOYA/APXA/APX4/A6VA/BOYA/MP1A/MPOA/MPXA (Cast # X4)	1	
80850	Cushion, PX4B/AOYA/APXA/APX4/A6VA/BOYA/MP1A/MPJA/MPOA/MPXA (.075”) 1st/2nd/3rd/4th And 1st Hold Clutch	1	
80850A	Cushion, PX4B 1st Clutch (.050”)	1	
80861	Snap Ring, PX4B/AOYA/APXA/APX4/A6VA/BOYA/MP1A/MPJA/MPOA/MPXA Holds Pressure Plate In All Drums	1-5	
80862	Snap Ring, PX4B/AOYA/APXA/APX4/A6VA/BOYA/MP1A/MPJA/MPOA/MPXA Holds Clutch Retainer In All Drums	1-5	
80870	Snap Ring, PX4B/AOYA/APXA/APX4/A6VA/BOYA/MP1A/MPJA/MPOA/MPXA Holds Bearing In Stator (Front)	1	
80879	Snap Ring, PX4B/AOYA/APXA/APX4/A6VA/BOYA/MP1A/MPJA/MPOA/MPXA Holds Caged Bearing # 214 To Mainshaft	1	
80880	Snap Ring, PX4B/AOYA/APXA/APX4/A6VA/BOYA/MP1A/MPJA/MPOA/MPXA Holds Mainshaft Bearing To Case (Use 60884CA)	1	
80881	Wire Snap Ring, PX4B/AOYA/APXA/APX4/A6VA/BOYA/MP1A/MPJA/MPOA/MPXA Mainshaft	1	
60884CA	Snap Ring, PX4B/AOYA/APXA/APX4/A6VA/BOYA/MP1A/MPJA/MPOA/MPXA Holds Secondary Shaft Bearing To Case (Also Fits Mainshaft Bearing To Case)	1-2	
80886A	Wire Snap Ring, PX4B/AOYA/APXA/APX4/A6VA/BOYA/MP1A/MPJA/MPOA/MPXA Holds Retainer # 269 To Countershaft	1	
80887	Split Washer, PX4B/AOYA/APXA/APX4/A6VA/BOYA/MP1A/MPJA/MPOA/MPXA (Horse Shoe Clips) Secondary Shaft (Also Fits AOYA/BOYA/MP1A/MPJA/MPXA Countershaft) (2 Per Pack)	1-2	
80888	Snap Ring, PX4B/AOYA/APXA/APX4/A6VA/BOYA/MP1A/MPJA/MPOA/MPXA Holds Race # 239 To Secondary Shaft	1	
80889	Snap Ring, PX4B/AOYA/APXA/APX4/A6VA/BOYA/MP1A/MPJA/MPOA/MPXA Holds Secondary Shaft Bearing To Case (Use 60884CA)	1	
80890	Snap Ring, PX4B/AOYA/APXA/APX4/A6VA/BOYA/MP1A/MPJA/MPOA/MPXA Holds Countershaft Bearing To Case	1	
80900	Servo Assembly, PX4B (Cast # PX4 On 4th Accumulator Cover & PX4 On Secondary Valve Body)	1	
80900-2	Detent Assembly, PX4B/AOYA/APXA/APX4/BOYA/MP1A/MPJA/MPXA (Servo) Bolts To Servo With 2 Detents For Servo Rod (Aluminum)	1	
80900A	Servo Assembly, APXA (Cast # PX4Z On 4th Accumulator Cover & PX4 On Secondary Valve Body) Has Detent In Main Valve Body	1	
80900AA	Servo Assembly, AOYA/BOYA/MPJA (Cast # POX Or POXA On 4th Accumulator Cover & POX On Secondary Valve Body)	1	
80900AB	Servo Assembly, MP1A/MPXA (Cast # PX4Z On 4th Accumulator Cover & PX4 On Secondary Valve Body) (No Detent In Main Valve Body)	1	
80924	Regulator, PX4B/APXA/APX4/MP1A/MPXA (Cast # PX4 On Regulator & Cast # PX4P On Throttle Body)	1	
80924A	Regulator, AOYA/A6VA/BOYA/MPJA/MPOA (Cast # POX On Regulator And Throttle Body)	1	
80925	Accumulator, PX4B/APXA/APX4/MP1A/MPXA (3 3/8” Tall)	1	
80925A	Accumulator, AOYA/A6VA/BOYA/MPJA/MPOA (3 3/4” Tall)	1	
80960	Piston, PX4B/AOYA/APXA/APX4/A6VA/BOYA/MP1A/MPJA/MPOA/MPXA 1st/2nd/3rd/4th & 1st Hold Clutch	1-5	
80970	Spring, PX4B/AOYA/APXA/APX4/A6VA/BOYA/MP1A/MPJA/MPOA/MPXA 1st/2nd/3rd/4th Clutch Return	1-4	
80974	Beveled Spring, PX4B/AOYA/APXA/APX4/A6VA/BOYA/MP1A/MPJA/MPOA/MPXA 1st Hold Clutch Return	1	

© Whatever It Takes Transmission Parts. Inc.

80980	Retainer, PX4B/AOYA/APXA/APX4/A6VA/BOYA/MP1A/MPJA/MPOA/MPXA 1st/2nd/3rd/4th Clutch Spring	1-4
80984	Retainer, PX4B/AOYA/APXA/APX4/A6VA/BOYA/MP1A/MPJA/MPOA/MPXA 1st Hold Clutch Spring	1
80991	Shift Rod, APXA / PX4B (12 5/16” Long) (No Rooster Comb)	1
80991A	Shift Rod, AOYA/A6VA/BOYA/MPOA (12 5/16” Long) (Welded On Rooster Comb)	1
80991AA	Shift Rod, MP1A/MPXA (12 5/16” Long) (Rooster Comb Held On By A Pin)	1
80991AB	Shift Rod, MPJA (13 3/8” Long)	1
80995	Park Pawl Assembly, PX4B/AOYA/APXA/APX4/A6VA/BOYA/MP1A/MPJA/MPOA/MPXA	1
80995-2	Pin, APXA Park Lock Pin (3 1/8” Long)	1
80995-6	Park Lock Assembly, PX4B/MP1A/MPXA (Steel Fork, Spring, 2 Pins)	1
80995-6A	Park Lock Assembly, AOYA/A6VA/BOYA/MPJA/MPOA (Aluminum Fork, Springs, 2 Pins)	1
80996	Fitting, AOYA/APXA/BOYA/MP1A/MPJA/MPXA/PX4B Cooler Line (1 1/2” Long) Holds Cooler Line To Bell	1
80996A	Fitting, AOYA/APXA/BOYA/MP1A/MPJA/MPXA/PX4B Cooler Line (4 5/8” Long) Holds Cooler Line To Bell	1
80999	Tube Set, PX4B/AOYA/APXA/APX4/BOYA/MP1A/MPJA/MPXA Cooler Line (3 Piece)	1

© Whatever It Takes Transmission Parts. Inc.

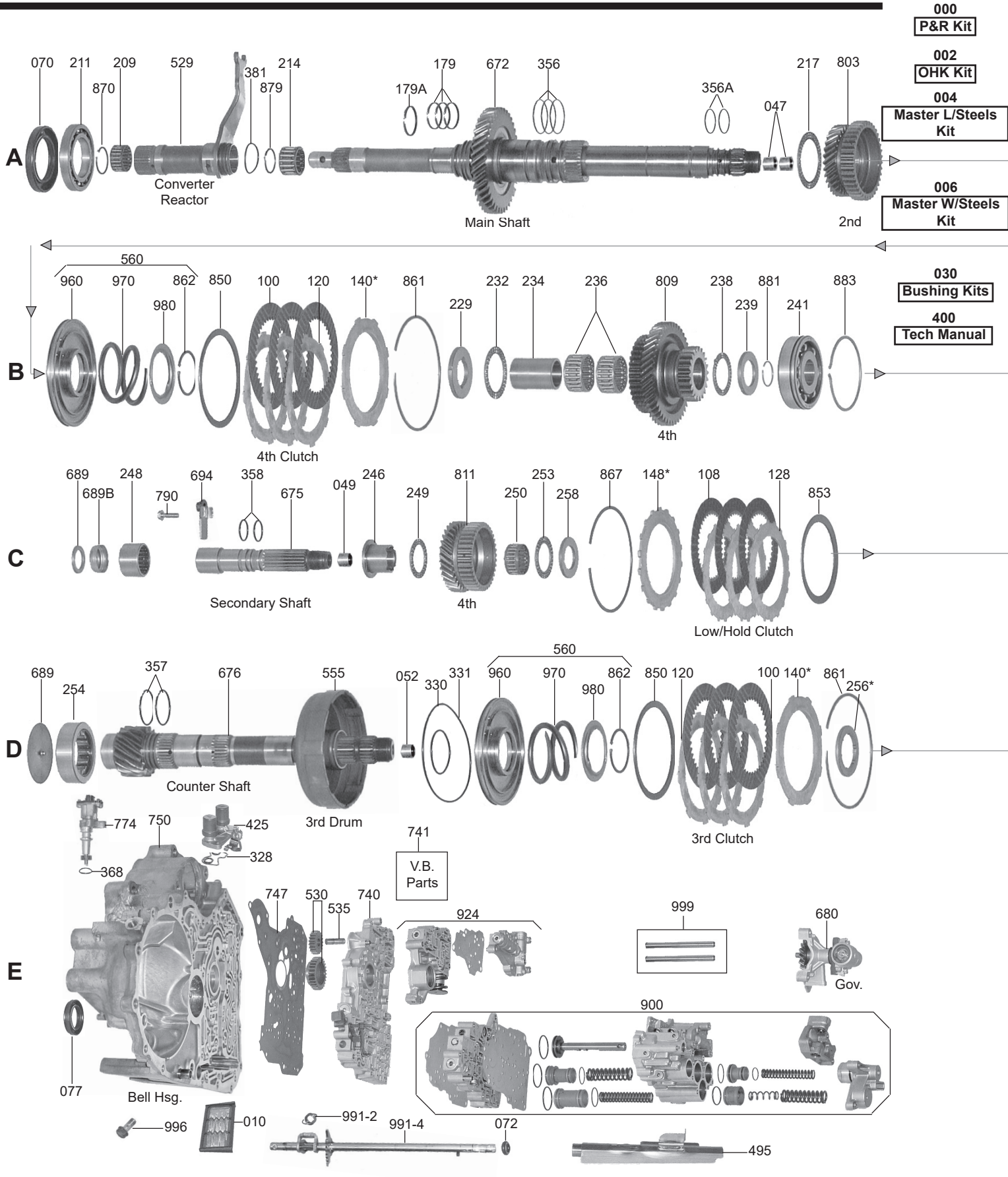
000
P&R Kit
002
OHK Kit
004
Master L/Steels Kit
006
Master W/Steels Kit
030
Bushing Kits
400
Tech Manual
A
070 211 209 529 381 214 179 672 356 217 803
870 879 179A 356A 047
Converter Reactor
Main Shaft
2nd
B
560
960 970 862 850 100 120 140* 861 229 232 234 236 809 238 881 883
980 239 241
4th Clutch
4th
C
689 248 694 358 049 246 811 253 867 148* 108 128
689B 790 675 249 250 258 853
Secondary Shaft
4th
Low/Hold Clutch
D
560
689 357 676 555 052 330 331 960 970 862 850 120 100 140* 861 256*
254 980
Counter Shaft
3rd Drum
3rd Clutch
E
774 750 425 328 368
741
V.B. Parts
747 530 535 740
924
999
680
Gov.
900
077
Bell Hsg.
996 010 991-2 991-4 072 495

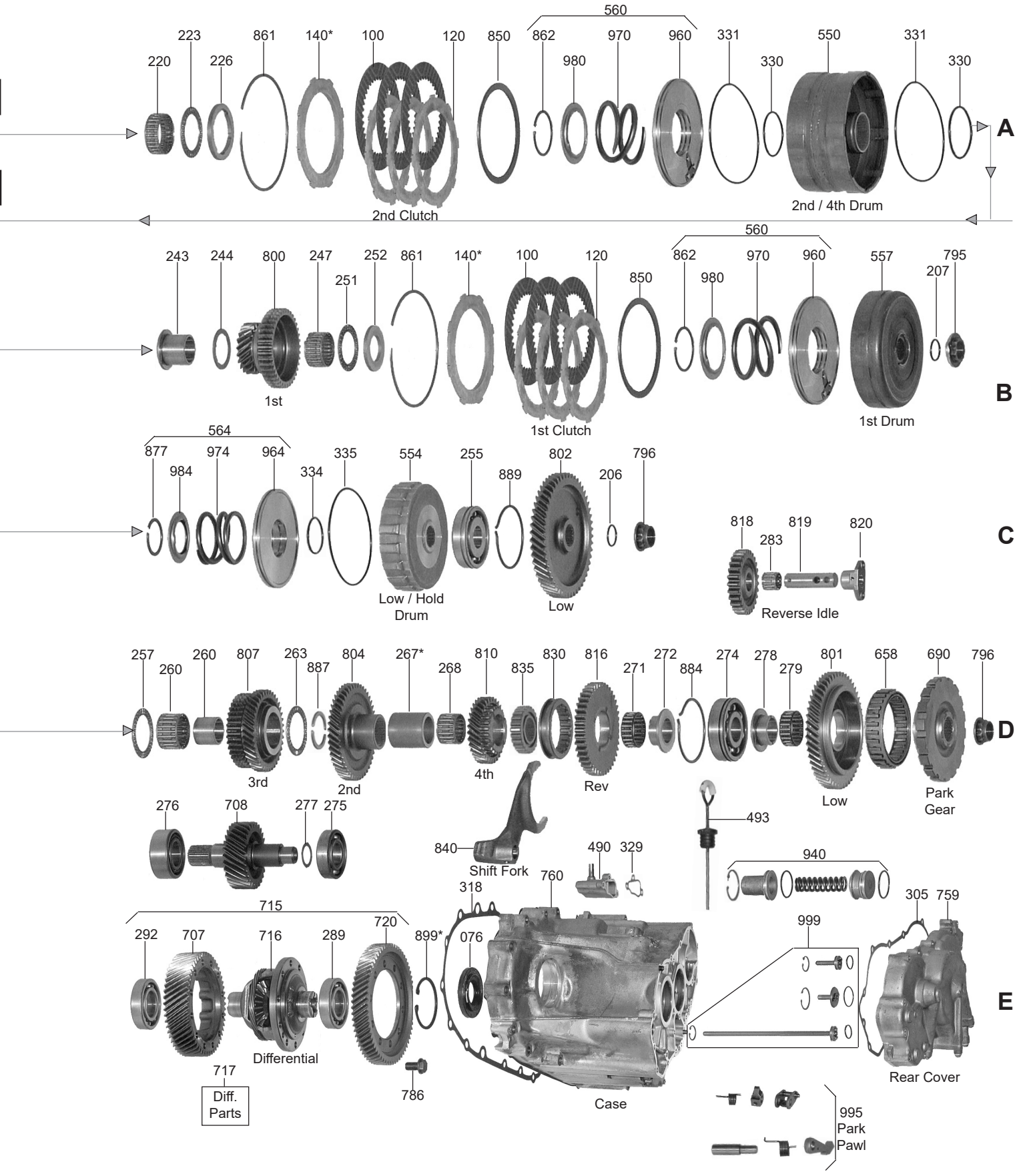

© Whatever It Takes Transmission Parts. Inc.

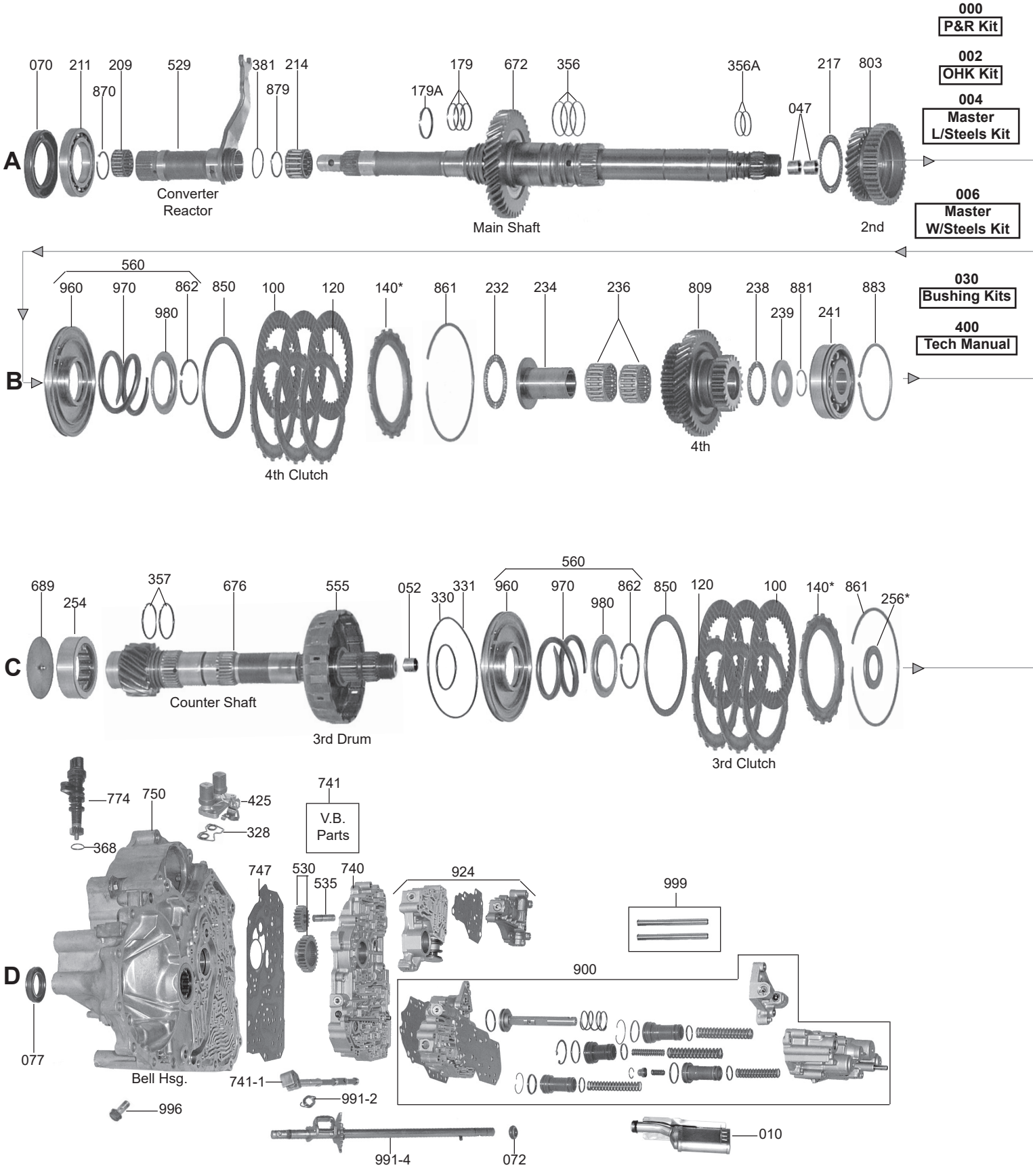
000
P&R Kit
002
OHK Kit
004
Master
L/Steels Kit
006
Master
W/Steels Kit
030
Bushing Kits
400
Tech Manual
A
070
211
209
870
529
Converter
Reactor
381
214
879
179
179A
672
356
Main Shaft
356A
217
803
047
2nd
B
560
960
970
862
980
850
100
120
140*
861
232
234
236
809
238
881
883
239
241
4th Clutch
4th
C
689
254
357
676
555
Counter Shaft
3rd Drum
052
330
331
560
960
970
862
980
850
120
100
140*
861
256*
3rd Clutch
D
774
750
368
425
328
741
V.B.
Parts
747
530
535
740
924
999
900
077
Bell Hsg.
741-1
991-2
996
991-4
072
010

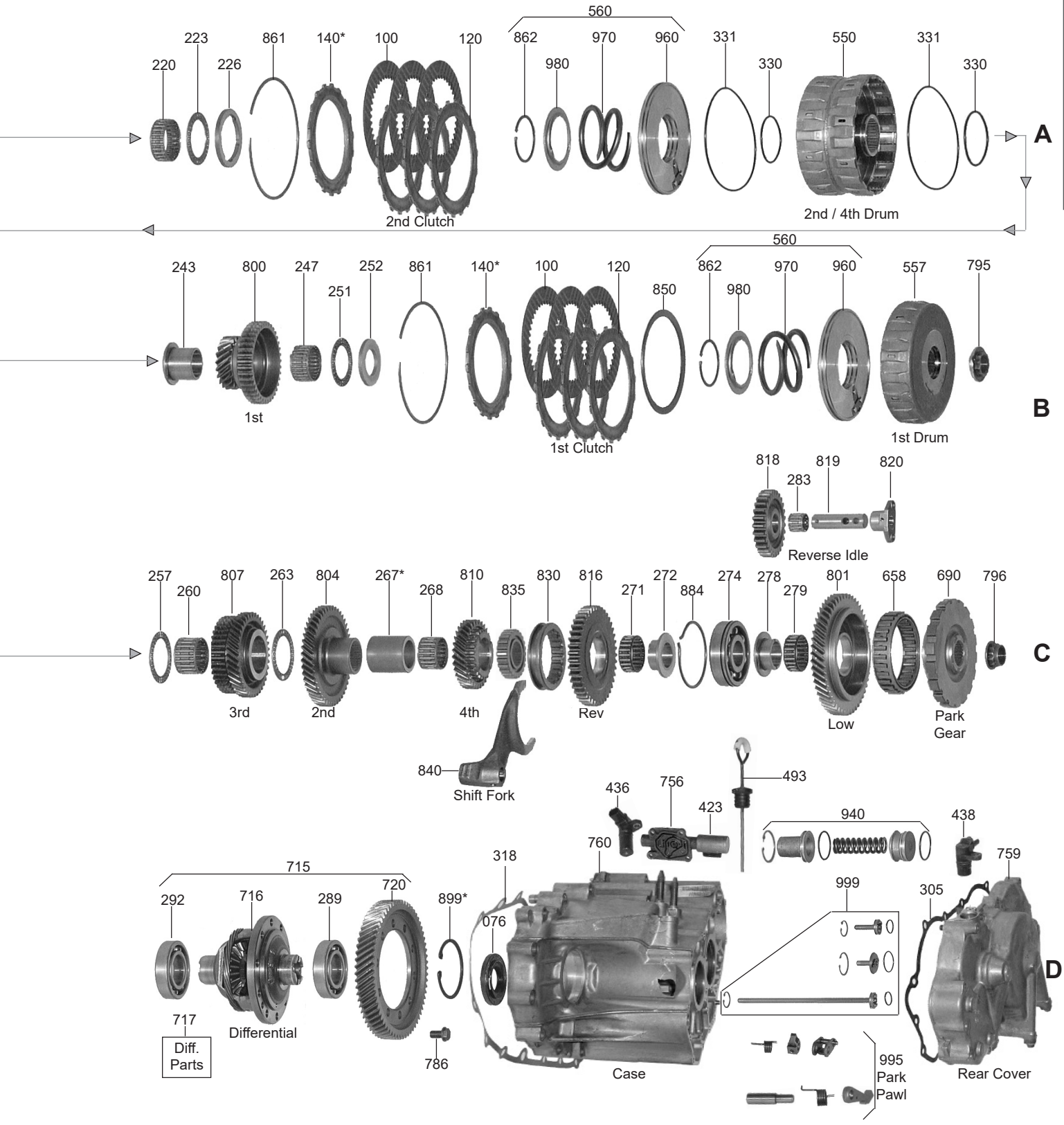

1-800-940-0197

© Whatever It Takes Transmission Parts. Inc.

PART #	PAPER & RUBBER KIT	QTY.	REFERENCE #
90000A	Paper & Rubber Kit, S5 / MPSA (Civic AWD) 1989-91	1	
90000D	Paper & Rubber Kit, S24A / A24A / M24A (Civic, Del Sol) 1992-97 (Also Fits A4RA / B4RA / B46A / BDRA / M4RA / S4RA 1996-Up	1	
90000H	Paper & Rubber Kit, M4TA / MDLA / MDMA / MP7A / SP7A / S4XA (With All Wheel Drive Parts) 1994-01	1	
90000M	Paper & Rubber Kit, BMXA / SLXA / (Civic) 2001-Up	1	

PART #	OVERHAUL KITS	QTY.	REFERENCE #
90002A	Overhaul Kit, S5 / MPSA (Civic AWD) 1989-91	1	
90002C	Overhaul Kit, M24A/A2YA/S24A/A24A 1992-95	1	
90002D	Overhaul Kit, A2YA/A24A/M24A/S24A 1992-95	1	
90002H	Overhaul Kit, MDMA/M4TA/MDLA/SDMA 1997-On	1	
90002HA	Overhaul Kit, M4TA/MDLA/MDMA/SDMA 1997-01	1	
90002M	Overhaul Kit, BMXA/SLXA (Civic) 2001-Up (Also Fits A4RA/S24A/B4RA/B46A/M4RA/BDRA/S4RA)	1	

PART #	MASTER L/STEEL KIT	QTY.	REFERENCE #
90004A	Master L/Steels Kit, S5 / MPSA (Civic AWD) 1989-91	1	
90004C	Master L/Steels Kit, P24 / A2YA / A24A / M24A / S24A (Civic, Del Sol) 1992-97	1	
90004D	Master L/Steels Kit, A4RA / B4RA / B46A / BDRA / S4RA / M4RA (Civic, Del Sol) 1996-Up	1	
90004H	Master L/Steels Kit, M4TA / MDLA / MDMA / MP7A / SP7A / S4XA / SDMA / SKWA (With All Wheel Drive Parts) 1994-01	1	
90004HA	Master L/Steels Kit, M4TA/MDLA/MDMA/SDMA 1997-01	1	
90004M	Master L/Steels Kit, BMXA / SLXA (Civic) 2001-Up	1	

PART #	MASTER W/STEEL KIT	QTY.	REFERENCE #
90006A	Master W/Steels Kit, S5 / MPSA (Civic AWD) 1989-91	1	
90006C	Master W/Steels Kit, P24 / A2YA / A24A / M24A / S24A (Civic, Del Sol) 1992-97	1	
90006D	Master W/Steels Kit, A4RA / B4RA / B46A / BDRA / S4RA (Civic, Del Sol) 1996-Up (USA / Canada Built)	1	
90006H	Master W/Steels Kit, M4TA / MDLA / MDMA / MP7A / SP7A / S4XA / SKWA (With All Wheel Drive Parts) 1994-01	1	
90006HA	Master W/Steels Kit, M4TA/MDLA/MDMA/SDMA 1997-01	1	
90006M	Master W/Steels Kit, BMXA / SLXA (Civic) 2001-Up	1	

PART #	FILTER	QTY.	REFERENCE #
60010Y	Filter, S5 / MPSA (Flat) (5 1/4" x 2 3/8") 1989-91	1	25420-PL5-000
90010B	Filter, S24A / A24A / M24A / P24 / A2YA (Flat) (6" x 1 15/16")	1	
90010D	Filter, (A4RA/BMXA/B4RA/MDMA/SLXA Some) / MDLA (Canister) (6 3/4" Long With Tubes) 1 Hole Bracket Is 1 1/4" From End	1	
90010E	Filter, (A4RA/B4RA/MDMA/SDMA Some) / M4TA (Canister) (6 3/4" Long With Tube) 2 Hole Bracket Is 5/8" From End (Also Fits SP7/MP7A/S4XA)	1	
90010M	Filter, BMXA/MDMA(Some)/SKWA/SLXA(Some)/SKWA (Canister 7 3/4" Long With Tube) (Bracket Is 2 1/4" From End)("L" Shaped Canister)	1	

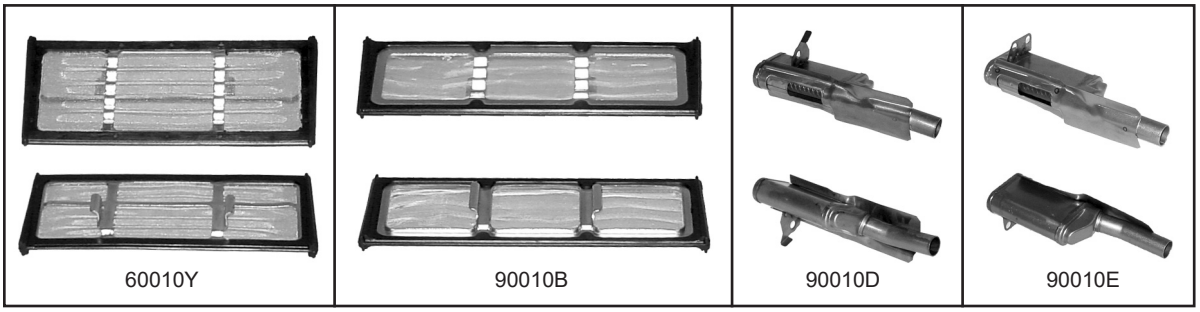

60010Y | 90010B | 90010D | 90010E

70018C	Screen, S24A / A24A / M24A / MDLA / MDMA / M4TA / MP7A / SP7A / S4XA / SKWA / MRVA / A4RA / B4RA / B46A / BDRA / BMXA / M4RA / S4RA / SLXA (Some) (In Valve Body) (.570"OD)(.125" Thick Rubber Boot)	1	
70018CA	Screen, S24A / A24A / M24A / MDLA / MDMA / M4TA / MP7A / SP7A / S4XA / SKWA / MRVA / A4RA / B4RA / B46A / BDRA / BMXA / M4RA / S4RA / SLXA (Some) (In Valve Body) (.662"OD)(.315" Thick Rubber Boot)	1	

© Whatever It Takes Transmission Parts. Inc.

PART #	BUSHINGS	QTY.	REFERENCE #
90030B	Bushing Kit, S24A/A24A/M24A/P24/M4TA/SDMA (4 Pieces)	1	
90030D	Bushing Kit, A4RA/MP7A/S4XA/SP7A/BMXA/MDMA Clutch Feed Pipe (3 Pieces)	1	
T-28999	Tool Set, Acura/Honda(22 Pcs Bushing Remover & Installer) (This Set Works For All Honda's W/Bushings)	1	

PART #	METAL CLAD SEALS	QTY.	REFERENCE #
60070A	Seal, A24A / M24A / S24A / MDLA / M4TA / MP7A / SP7A / S4XA / A4RA / B4RA / BMXA Converter (44 x 68 x 8mm) Counter Clockwise Helix	1	
90070A	Seal, S5 / MPSA / P24 / A2YA (Civic, Del Sol) Converter 1989-97	1	91207-POX-003
60072	Seal, A24A / M24A / S24A / MDLA / M4TA / MP7A / SP7A / S4XA / A4RA / B4RA / BMXA Manual Shaft	1	
90076A	Seal, S5 / MPSA (Civic All Wheel Drive) Axle (Bell Housing Side) (38 x 54 x 8mm) 1989-91	1	91206-PC8-935
90076C	Seal, P24 / A2YA (Civic, Del Sol) Axle (Bell Housing Side) (35 x 56 x 8mm) 1992-97 (Use 60077C)	1	
60076G	Seal, S5 / MPSA Bell (Axle)(Also Fits S24A / A24A / A4RA / B4RA / M24A Case) (40 x 76 x 9mm)	1	91206-PC8-005
60076L	Seal, P24 / A2YA / BMXA / MP7A / SP7A / S4XA (Civic, Del Sol) Axle (Case Side) (35 x 76 x 9mm) 1992-97	1	91206-689-005
90077A	Seal, S5 / MPSA (Civic All Wheel Drive) Axle (Bell Housing Side) (40 x 76 x 9mm) 1989-91 (Use 60076G)	1	91206-PC8-005
60077AA	Seal, M4TA Axle (Case Side) (35 x 76 x 9mm) 1997-02	1	
90077C	Seal, P24 / A2YA (Civic, Del Sol) Axle (Case Side) (35 x 76 x 9mm) 1992-97 (Use 60076L)	1	91206-689-005
60077C	Seal, P24/A2YA/BMXA/MPJA Bell (Axle)	1	91205-PL3-A01
60077H	Seal, A24A / M24A / S24A / MDLA / M4TA / MP7A / SP7A / S4XA / A4RA / B4RA / BMXA Axle (Bell Housing Side) (40 x 56 x 9mm)	1	

PART #	FRICTION CLUTCH	QTY.	REFERENCE #
90100A	Friction, S5 / MPSA / S24A / A24A / A4RA / B4RA / M24A / BMXA / BDRA 1st/2nd/3rd/4th Clutch (.075") 38 Teeth (4.325"OD)	3-12	22544-P24-A01
170100A	Friction, SP7A / MP7A 1st Clutch (.077") 41 Teeth	3	
90100E	Friction, MDLA / M4TA / SLXA / S4XA 1st Clutch (Low) (.075") 38 Teeth (4.560"OD) (W/Straight Grooves From ID To OD)(Also Fits MP7A / M4RA / SLXA / SP7A / S4XA 2nd/4th Clutch) (Can Use 90100EA)	3-6	
90100EA	Friction, MDLA / MDMA / M4TA 2nd/3rd/4th Clutch (.075") 38 Teeth (4.560"OD) (W/Turtle Shell Type Grooves)(Also Fits MDMA/M4RA 1st Clutch)(Also Fits SLXA 3rd Clutch)	3-9	
90100N	Friction, BZKA/MZKA 1st/2nd And 3rd Clutch (.076")(42Teeth) 2003-Up	AR	
90108A	Friction, S5 / MPSA / S24A / A24A / M4TA / MDLA / M24A / SP7A / MP7A / S4XA Low/Hold Clutch (.079") 38 Teeth (3.935"OD)	3	22544-P24-S00
90119C	Friction Module, A24A / M24A / S24A 1992-97	1	
90119D	Friction Module, A4RA / B4RA / B46A / BDRA / M4RA / BMXA / SLXA 1996-Up	1	
90119E	Friction Module, M4TA/MDLA/MDMA/S4XA/SKWA 1996-01	1	
90119ES1	Friction Module, M4TA/MDLA/MDMA/S4XA (Stage 1)	1	
90119M	Friction Module, BMXA/SLXA 2001-05	1	

PART #	STEEL CLUTCH	QTY.	REFERENCE #
60120B	Steel, S24A / A24A / M24A 2nd/3rd/4th Clutch (.079") 8 Teeth (3.230"ID) 1989-97	3-9	22543-PC9-000
60120BB	Steel, S24A / A24A / M24A 1st Clutch (.063") 8 Teeth (3.230"ID) 1989-97	3	22543-PHO-850
170120C	Steel, SP7A / MP7A Low Clutch (.079") 10 Teeth (3.440"ID)	3	
90120D	Steel, A4RA / B4RA / BMXA / BDRA 1st Clutch (.063") 18 Teeth (3.220"ID)	3	
90120DA	Steel, A4RA / B4RA / BMXA / BDRA 2nd/3rd/4th Clutch (.079") 18 Teeth (3.220"ID)	3-9	
90120E	Steel, M4TA 1st Clutch (.063") 10 Teeth (3.220"ID)	3	
90120EA	Steel, M4TA / MDMA/ MDLA 2nd/3rd/4th Clutch (.079") 10 Teeth (3.220"ID) Also Fits SP7A / MP7A / S4XA 2nd/3rd Clutch	3-9	
90128A	Steel, S5 / MPSA / A24A / M24A / SP7A / S4XA Low/Hold Clutch (.079") 18 Teeth (2.800"ID)	3	22543-PS5-003
90128B	Steel, S24A / M4TA / MDLA / MP7A Low/Hold Clutch (.063") 18 Teeth (2.800"ID)	3	

PART #	CLUTCH PRESSURE PLATES	QTY.	REFERENCE #
60140B-2	Pressure Plate, S24A / A24A / M24A 1st/2nd/3rd/4th Clutch (Stamped # 2) 8 Teeth (3.230"ID)	1-4	
60140B-3	Pressure Plate, S24A / A24A / M24A 1st/2nd/3rd/4th Clutch (Stamped # 3) 8 Teeth (3.230"ID)	1-4	
60140B-4	Pressure Plate, S24A / A24A / M24A 1st/2nd/3rd/4th Clutch (Stamped # 4) 8 Teeth (3.230"ID)	1-4	
60140B-5	Pressure Plate, S24A / A24A / M24A 1st/2nd/3rd/4th Clutch (Stamped # 5) 8 Teeth (3.230"ID)	1-4	
60140B-6	Pressure Plate, S24A / A24A / M24A 1st/2nd/3rd/4th Clutch (Stamped # 6) 8 Teeth (3.230"ID)	1-4	
60140B-7	Pressure Plate, S24A / A24A / M24A 1st/2nd/3rd/4th Clutch (Stamped # 7) 8 Teeth (3.230"ID)	1-4	
60140C-1	Pressure Plate, SP7A/MP7A/S4XA 1st Clutch (Stamped #1) 10 Teeth (3.438"ID)	1	
60140C-2	Pressure Plate, SP7A/MP7A/S4XA 1st Clutch (Stamped #2) 10 Teeth (3.438"ID)	1	

© Whatever It Takes Transmission Parts. Inc.

PART #	CLUTCH PRESSURE PLATES (Continued)	QTY.	REFERENCE #
60140C-3	Pressure Plate, SP7A/MP7A/S4XA 1st Clutch (Stamped #3) 10 Teeth (3.438"ID)	1	
60140C-4	Pressure Plate, SP7A/MP7A/S4XA 1st Clutch (Stamped #4) 10 Teeth (3.438"ID)	1	
60140C-5	Pressure Plate, SP7A/MP7A/S4XA 1st Clutch (Stamped #5) 10 Teeth (3.438"ID)	1	
60140C-6	Pressure Plate, SP7A/MP7A/S4XA 1st Clutch (Stamped #6) 10 Teeth (3.438"ID)	1	
60140C-7	Pressure Plate, SP7A/MP7A/S4XA 1st Clutch (Stamped #7) 10 Teeth (3.438"ID)	1	
60140C-8	Pressure Plate, SP7A/MP7A/S4XA 1st Clutch (Stamped #8) 10 Teeth (3.438"ID)	1	
60140C-9	Pressure Plate, SP7A/MP7A/S4XA 1st Clutch (Stamped #9) 10 Teeth (3.438"ID)	1	
60140C-10	Pressure Plate, SP7A/MP7A/S4XA 1st Clutch (Stamped #10) 10 Teeth (3.438"ID)	1	
90140DA	Pressure Plate, A4RA / B4RA / BMXA 1st/2nd/3rd/4th Clutch (Stamped #1) 18 Teeth (3.223"ID)	1-4	
90140DB	Pressure Plate, A4RA / B4RA / BMXA 1st/2nd/3rd/4th Clutch (Stamped #2) 18 Teeth (3.223"ID)	1-4	
90140DC	Pressure Plate, A4RA / B4RA / BMXA 1st/2nd/3rd/4th Clutch (Stamped #3) 18 Teeth (3.223"ID)	1-4	
90140DD	Pressure Plate, A4RA / B4RA 1st/2nd/3rd/4th Clutch (Stamped #4) 18 Teeth (3.223"ID)	1-4	
90140DE	Pressure Plate, A4RA / B4RA 1st/2nd/3rd/4th Clutch (Stamped #5) 18 Teeth (3.223"ID)	1-4	
90140DF	Pressure Plate, A4RA / B4RA 1st/2nd/3rd/4th Clutch (Stamped #6) 18 Teeth (3.223"ID)	1-4	
90140DG	Pressure Plate, A4RA / B4RA 1st/2nd/3rd/4th Clutch (Stamped #7) 18 Teeth (3.223"ID)	1-4	
90140ED	Pressure Plate, M4TA / MDLA 1st/2nd/3rd/4th Clutch (Stamped #4) 10 Teeth (Also Fits SP7A / MP7A / S4XA 2nd/3rd/4th Clutch)	1-4	
90140EE	Pressure Plate, M4TA / MDLA 1st/2nd/3rd/4th Clutch (Stamped #5) 10 Teeth (Also Fits SP7A / MP7A / S4XA 2nd/3rd/4th Clutch)	1-4	
90140EF	Pressure Plate, M4TA / MDLA 1st/2nd/3rd/4th Clutch (Stamped #6) 10 Teeth (Also Fits SP7A / MP7A / S4XA 2nd/3rd/4th Clutch)	1-4	
90140EG	Pressure Plate, M4TA / MDLA 1st/2nd/3rd/4th Clutch (Stamped #7) 10 Teeth (Also Fits SP7A / MP7A / S4XA 2nd/3rd/4th Clutch)	1-4	
90140EH	Pressure Plate, M4TA / MDLA 1st/2nd/3rd/4th Clutch (Stamped #8) 10 Teeth (Also Fits SP7A / MP7A / S4XA 2nd/3rd/4th Clutch)	1-4	
90140EJ	Pressure Plate, M4TA / MDLA 1st/2nd/3rd/4th Clutch (Stamped #9) 10 Teeth (Also Fits SP7A / MP7A / S4XA 2nd/3rd/4th Clutch)	1-4	
90140EK	Pressure Plate, M4TA / MDLA 1st/2nd/3rd/4th Clutch (Stamped #10) 10 Teeth (Also Fits SP7A / MP7A / S4XA 2nd/3rd/4th Clutch)	1-4	
90140EL	Pressure Plate, M4TA / MDLA 1st/2nd/3rd/4th Clutch (Stamped #11) 10 Teeth (Also Fits SP7A / MP7A / S4XA 2nd/3rd/4th Clutch)	1-4	
90140EM	Pressure Plate, M4TA / MDLA 1st/2nd/3rd/4th Clutch (Stamped #12) 10 Teeth (Also Fits SP7A / MP7A / S4XA 2nd/3rd/4th Clutch)	1-4	
90148BA	Pressure Plate, S24A / A24A / M4TA / M24A / MDLA / SP7A / MP7A / S4XA Low/Hold Clutch (Stamped #1) 18 Teeth	1	
90148BB	Pressure Plate, S24A / A24A / M4TA / M24A / MDLA / SP7A / MP7A / S4XA Low/Hold Clutch (Stamped #2) 18 Teeth	1	
90148BC	Pressure Plate, S24A / A24A / M4TA / M24A / MDLA / SP7A / MP7A / S4XA Low/Hold Clutch (Stamped #3) 18 Teeth	1	
90148BD	Pressure Plate, S24A / A24A / M4TA / M24A / MDLA / SP7A / MP7A / S4XA Low/Hold Clutch (Stamped #4) 18 Teeth	1	
90148BE	Pressure Plate, S24A / A24A / M4TA / M24A / MDLA / SP7A / MP7A / S4XA Low/Hold Clutch (Stamped #5) 18 Teeth	1	
90148BF	Pressure Plate, S24A / A24A / M4TA / M24A / MDLA / SP7A / MP7A / S4XA Low/Hold Clutch (Stamped #6) 18 Teeth	1	
90148BG	Pressure Plate, S24A / A24A / M4TA / M24A / MDLA / SP7A / MP7A / S4XA Low/Hold Clutch (Stamped #7) 18 Teeth	1	

PART #	VALVE BODY KITS	QTY.	REFERENCE #
S90165D	Valve Body Kit, A4RA/BDRA/BMXA/B4RA/B46A/M4RA/SLXA/S4RA (Superior)	1	
S90165J	Valve Body Kit, M4TA/MCVA/MDLA/MDMA/MRVA (Superior)(Sure Cool)	1	

PART #	WASHERS & BEARINGS	QTY.	REFERENCE #
90206E	Washer, M4TA / SP7A / MP7A / S4XA Under Secondary Shaft Nut (1.120"OD) (Also SP7A / MP7A Mainshaft Nut)	1-2	
90207H	Use 90206E	1	
60209A	Caged Needle Bearing, S24A / A24A / A4RA / M4TA / B4RA / M24A / MDLA / BMXA / SP7A / MP7A / S4XA Converter Reactor (Front)	1	
60211A	Ball Bearing, S24A / A24A / A4RA / M4TA / B4RA / M24A / MDLA / BMXA / SP7A / MP7A / S4XA Converter To Bell Housing (2.675"OD / 1.570"ID)	1	
90214B	Caged Needle Bearing, S24A / A4RA / M4TA / B4RA / M24A / MDLA / BMXA / SP7A / MP7A / S4XA Converter Reactor To Mainshaft (Rear) (.620" Thick)	1	
90214C	Caged Needle Bearing, A24A Converter Reactor To Mainshaft (Rear) (.695" Thick)	1	
60217A	Thrust Bearing, S24A / A24A / A4RA / M4TA / B4RA / M24A / MDLA / BMXA / SP7A / MP7A / S4XA 2nd Gear To Mainshaft (Also Fits SP7A / MP7A 3rd Gear To 3rd Clutch Drum (Countershaft) (Also Fits SP7A / MP7A 3rd Gear To 2nd Gear (Countershaft)	1-3	

© Whatever It Takes Transmission Parts. Inc.

60220D ..... Caged Needle Bearing, S24A / A24A / A4RA / M4TA / B4RA / M24A / MDLA / BMXA / SP7A / MP7A / S4XA 2nd Gear To Mainshaft 1
60223A ..... Thrust Bearing, S24A / A24A / M24A 2nd Gear To Mainshaft 1
S60223AB ..... Washer, S24A / A24A / M24A 2nd Gear To Mainshaft (Bronze Replacement) (Sonnax) 1
60223E ..... Thrust Bearing, A4RA / M4TA / B4RA / MDLA / BMXA / SP7A / MP7A / S4XA 2nd Gear To Mainshaft 1
60223EB ..... Washer, A4RA / M4TA / B4RA / MDLA / BMXA / SP7A / MP7A / S4XA 2nd Gear To Mainshaft (Bronze Replacement) (Sonnax) 1
60226A01 ..... Race, S24A / A24A / M24A 2nd Gear To Drum (2.010"OD) (.117") 1
60226A02 ..... Race, S24A / A24A / M24A 2nd Gear To Drum (2.010"OD) (.119") 1
60226A03 ..... Race, S24A / A24A / M24A 2nd Gear To Drum (2.010"OD) (.121") 1
60226A04 ..... Race, S24A / A24A / M24A 2nd Gear To Drum (2.010"OD) (.123") 1
60226A05 ..... Race, S24A / A24A / M24A 2nd Gear To Drum (2.010"OD) (.125") 1
60226A06 ..... Race, S24A / A24A / M24A 2nd Gear To Drum (2.010"OD) (.127") 1
60226A07 ..... Race, S24A / A24A / M24A 2nd Gear To Drum (2.010"OD) (.129") 1
60226A08 ..... Race, S24A / A24A / M24A 2nd Gear To Drum (2.010"OD) (.131") 1
60226A09 ..... Race, S24A / A24A / M24A 2nd Gear To Drum (2.010"OD) (.135") 1
60226A10 ..... Race, S24A / A24A / M24A 2nd Gear To Drum (2.010"OD) (.137") 1
60226A11 ..... Race, S24A / A24A / M24A 2nd Gear To Drum (2.010"OD) (.139") 1
60226A12 ..... Race, S24A / A24A / M24A 2nd Gear To Drum (2.010"OD) (.141") 1
60226A13 ..... Race, S24A / A24A / M24A 2nd Gear To Drum (2.010"OD) (.143") 1
60226A14 ..... Race, S24A / A24A / M24A 2nd Gear To Drum (2.010"OD) (.145") 1
60226A15 ..... Race, S24A / A24A / M24A 2nd Gear To Drum (2.010"OD) (.147") 1
60226A16 ..... Race, S24A / A24A / M24A 2nd Gear To Drum (2.010"OD) (.149") 1
60226A17 ..... Race, S24A / A24A / M24A 2nd Gear To Drum (2.010"OD) (.151") 1
60226A18 ..... Race, S24A / A24A / M24A 2nd Gear To Drum (2.010"OD) (.153") 1
60226A19 ..... Race, S24A / A24A / M24A 2nd Gear To Drum (2.010"OD) (.155") 1
60226A20 ..... Race, S24A / A24A / M24A 2nd Gear To Drum (2.010"OD) (.157") 1
60226A21 ..... Race, S24A / A24A / M24A 2nd Gear To Drum (2.010"OD) (.159") 1
60226A22 ..... Race, S24A / A24A / M24A 2nd Gear To Drum (2.010"OD) (.161") 1
60226A23 ..... Race, S24A / A24A / M24A 2nd Gear To Drum (2.010"OD) (.163") 1
60226A24 ..... Race, S24A / A24A / M24A 2nd Gear To Drum (2.010"OD) (.165") 1
60226A25 ..... Race, S24A / A24A / M24A 2nd Gear To Drum (2.010"OD) (.167") 1
60226A26 ..... Race, S24A / A24A / M24A 2nd Gear To Drum (2.010"OD) (.169") 1
60226A27 ..... Race, S24A / A24A / M24A 2nd Gear To Drum (2.010"OD) (.171") 1
60226C1 ..... Race, MDLA / A4RA / M4TA / B4RA / BMXA / SP7A / MP7A / S4XA 2nd Gear To Drum (2.160"OD) (.155") 1
60226C2 ..... Race, MDLA / A4RA / M4TA / B4RA / BMXA / SP7A / MP7A / S4XA 2nd Gear To Drum (2.160"OD) (.157") 1
60226C3 ..... Race, MDLA / A4RA / M4TA / B4RA / BMXA / SP7A / MP7A / S4XA 2nd Gear To Drum (2.160"OD) (.159") 1
60226C4 ..... Race, MDLA / A4RA / M4TA / B4RA / BMXA / SP7A / MP7A / S4XA 2nd Gear To Drum (2.160"OD) (.161") 1
60226C5 ..... Race, MDLA / A4RA / M4TA / B4RA / BMXA / SP7A / MP7A / S4XA 2nd Gear To Drum (2.160"OD) (.163") 1
60226C6 ..... Race, MDLA / A4RA / M4TA / B4RA / BMXA / SP7A / MP7A / S4XA 2nd Gear To Drum (2.160"OD) (.165") 1
60226C7 ..... Race, MDLA / A4RA / M4TA / B4RA / BMXA / SP7A / MP7A / S4XA 2nd Gear To Drum (2.160"OD) (.167") 1
60226C8 ..... Race, MDLA / A4RA / M4TA / B4RA / BMXA / SP7A / MP7A / S4XA 2nd Gear To Drum (2.160"OD) (.169") 1
60226C9 ..... Race, MDLA / A4RA / M4TA / B4RA / BMXA / SP7A / MP7A / S4XA 2nd Gear To Drum (2.160"OD) (.171") 1
90229B ..... Race, S24A / A24A / M4TA / M24A 4th Gear (Mainshaft) To Drum (2.075"OD) 1.032"ID (.176" Thick) With 2 Notches On ID 1
90232B ..... Thrust Bearing, S24A / A24A / A4RA / M4TA/ B4RA / M24A / MDLA / BMXA / SP7A / MP7A / S4XA 4th Gear To Drum (Mainshaft) (2.115"OD) (1.540"ID) (.098" Thick) 1
60232E ..... Thrust Bearing, S24A / A24A / M24A 3rd Gear To 3rd Clutch Drum (Countershaft) 1
90234B ..... Collar, S24A / A24A / M4TA / M24A 4th Gear To Mainshaft (1.260"OD) 1.024"ID (1.770" Long) (Has No Shoulder) 1
90234D ..... Collar W/Shoulder, A4RA / B4RA / MDLA / BMXA / S4XA 4th Gear To Mainshaft (2.080"OD Of Shoulder) 1.260"OD (1.024"ID) (1.950" Long) 1
90234H ..... Collar W/Shoulder, SP7A / MP7A 4th Gear To Mainshaft (2.080"OD Of Shoulder) (1.260"OD) 1.024"ID (1.930" Long) 1
90236B ..... Caged Needle Bearing, S24A / A24A / A4RA / M4TA / B4RA / M24A / MDLA / BMXA / SP7A / MP7A / S4XA 4th Gear To Collar (Mainshaft) (1.460"OD) (.775" Tall) 2
90238B ..... Thrust Bearing, S24A / A24A / M4TA / M24A / MDLA / SP7A / MP7A / S4XA 4th Gear (Rear) (Mainshaft) (1.725"OD) (1.265"ID) (.078" Thick) 1
90238D ..... Thrust Bearing, A4RA / B4RA 4th Gear To Snap Ring (Mainshaft) (1.753"OD) (1.265"ID) (.078" Thick)(Also Fits BMXA) 1

© Whatever It Takes Transmission Parts. Inc.

PART #	WASHERS & BEARINGS (Continued)	QTY.	REFERENCE #
90239B	Race, S24A / A24A / M4TA / M24A / SP7A / MP7A 4th Gear (Rear) (Mainshaft) (1.765”OD) (1.033”ID) (.137” Thick)	1	
90239D	Race, A4RA / B4RA / MDLA / BMXA / S4XA 4th Gear (Rear) (Mainshaft) (1.760”OD) (1.035”ID) (.177” Thick)	1	
90241B	Roller Bearing, S24A / A24A / M4TA / M24A / MDLA / BMXA / MP7A / SP7A / S4XA Mainshaft To Case (2.952”OD) (Use 60274CA)	1	
90243B	Collar W/Shoulder, S24A / A24A / M24A / SP7A / MP7A 1st Gear To Mainshaft (1.065” Long With Shoulder)	1	
90243D	Collar, A4RA / B4RA / M4RA / MDLA / BMXA / S4XA 1st Gear To Mainshaft (1.065” Long W/Out Shoulder)	1	
90244B	Washer, S24A / A24A / M24A / MDLA / SP7A / MP7A / S4XA 1st Gear To Collar (Mainshaft) (1.645”OD) (1.225”ID) (.057” Thick)	1	
90246B	Collar W/Shoulder, S24A / A24A / M4TA / M24A / MDLA / SP7A / MP7A / S4XA 4th Gear To Secondary Shaft	1	
90247B	Caged Needle Bearing, S24A / A24A / A4RA / M4TA / B4RA / M24A / BMXA / SP7A / MP7A / S4XA 1st Gear To 2st Clutch Drum (Mainshaft) (1.350”OD) (.715” Thick)	1	
90248B	Caged Needle Bearing, S24A / A24A / M4TA / M24A / MDLA / SP7A / MP7A / S4XA Case To Secondary Shaft	1	
90249B	Thrust Bearing, S24A / A24A / M4TA / M24A / MDLA 4th Gear To Collar (Secondary Shaft)	1	
90250B	Caged Needle Bearing, S24A / A24A / M4TA / M24A / MDLA / SP7A / MP7A / S4XA 4th Gear To Collar (Secondary Shaft) (1.240”OD) (.555” Thick)	1	
90251B	Thrust Bearing, S24A / A24A / A4RA / M4TA / B4RA / M24A / MDLA / BMXA / SP7A / MP7A / S4XA 1st Gear To 1st Clutch Drum (Mainshaft) (1.842”OD) (1.226”ID) (.078” Thick)	1	
90252B	Race, S24A / A24A / M24A 1st Gear To 1st Clutch Drum (Mainshaft) (1.825”OD) (1.030”ID) (.136” Thick)	1	
90252D	Race, A4RA / M4TA / B4RA / MDLA / BMXA / SP7A / MP7A / S4XA 1st Gear To 1st Clutch Drum (Mainshaft) (1.825:OD) (1.030”ID) (.098” Thick)	1	
90253B	Thrust Bearing, S24A / A24A / M4TA / M24A / MDLA 4th Gear To Low Hold Drum (Secondary Shaft) (1.685”OD) (1.108”OD) (.078” Thick) Also Fits SP7A / MP7A / S4XA	1	
90254A	Caged Roller Bearing, S24A / A24A / A4RA / M4TA / B4RA / M24A / MDLA / BMXA / SP7A / MP7A / S4XA Bell Housing To Countershaft (2.445”OD) (1.395”ID) (.745” Thick)	1	
90255B	Ball Bearing, S24A / A24A / M4TA / M24A / MDLA / SP7A / MP7A / S4XA Case To Secondary Shaft (2.440”OD) (.860”ID) (.590” Thick)	1	
60256C1	Race, S24A/A24A/M24A 3rd Gear (Countershaft) To 3rd Clutch Drum (.118)	1	
60256C2	Race, S24A/A24A/M24A 3rd Gear (Countershaft) To 3rd Clutch Drum (.119)	1	
60256C3	Race, S24A/A24A/M24A 3rd Gear (Countershaft) To 3rd Clutch Drum (.120)	1	
60256C4	Race, S24A/A24A/M24A 3rd Gear (Countershaft) To 3rd Clutch Drum (.121)	1	
60256C5	Race, S24A/A24A/M24A 3rd Gear (Countershaft) To 3rd Clutch Drum (.122)	1	
60256C6	Race, S24A/A24A/M24A 3rd Gear (Countershaft) To 3rd Clutch Drum (.123)	1	
60256C7	Race, S24A/A24A/M24A 3rd Gear (Countershaft) To 3rd Clutch Drum (.124)	1	
60256C8	Race, S24A/A24A/M24A 3rd Gear (Countershaft) To 3rd Clutch Drum (.125)	1	
60256C9	Race, S24A/A24A/M24A 3rd Gear (Countershaft) To 3rd Clutch Drum (.126)	1	
90256D2	Race, A4RA / M4TA / B4RA / MDLA 3rd Gear (Countershaft) To Drum (.176”) (26 Inner Splines) (Also Fits BMXA/S4XA)	1	
90256D9	Race, A4RA / M4TA / B4RA / MDLA 3rd Gear (Countershaft) To Drum (.196”) (26 Inner Splines) (Also Fits BMXA/S4XA)	1	
90256H	Top Hat Race, SP7A/MP7A 3rd Gear (Countershaft) To 3rd Clutch Drum	1	
90257A	Thrust Bearing, S24A / A24A / M24A 3rd Gear To 3rd Clutch Drum (Countershaft) (Use 60232E)	1	
90257H	Thrust Bearing, SP7A / MP7A 3rd Gear To 3rd Clutch Drum (Countershaft) (Use 60217A)	1	
90257D	Thrust Bearing, AR4A / M4TA / BR4A / BMXA / S4XA 3rd Gear To 3rd Clutch Drum (Countershaft) (Use 90263D)	1	
90258B	Race, S24A / A24A / M4TA / M24A / SP7A / MP7A / S4XA 4th Gear To Low/Hold Drum (Secondary Shaft) (1.665”OD) (.912”ID) (.116” Thick)	1	
90260B	Caged Needle Bearing, S24A / A24A / M24A 3rd Gear To Countershaft (1.460”OD) (.930” Wide)	1	
90260D	Caged Needle Bearing, A4RA / M4TA / B4RA / MDLA / BMXA / SP7A / MP7A / S4XA 3rd Gear To Countershaft (1.580”OD) (.795” Wide)	1	
90260DA	Sleeve Race, A4RA / M4TA / B4RA / BMXA / S4XA 3rd Gear To Countershaft (1.425”OD) (1.220”ID) (.814” Wide) (Use With 90260D)	1	
90263D	Thrust Bearing, A4RA / M4TA / B4RA / MDLA 3rd Gear (Countershaft) To 2nd Gear (2.155”OD) (1.638”ID) (.078” Thick) (Also Fits A4RA / M4TA / B4RA / BMXA / S4XA 3rd Gear To 3rd Clutch Drum (Countershaft)	1-2	
90263H	Thrust Bearing, SP7A / MP7A 3rd Gear To 2nd Gear (Countershaft) (Use 60217A)	1	
60267A1	Collar, S24A / A24A / A4RA / M4TA / B4RA / M24A / BMXA / SP7A / MP7A / S4XA 2nd Gear To 4th Gear (Countershaft) (1.535”)	1	
60267A2	Collar, S24A / A24A / A4RA / M4TA / B4RA / M24A / BMXA / SP7A / MP7A / S4XA 2nd Gear To 4th Gear (Countershaft) (1.537”)	1	

© Whatever It Takes Transmission Parts. Inc.

60267A3 ..... Collar, S24A / A24A / A4RA / M4TA / B4RA / M24A / BMXA / SP7A / MP7A / S4XA 2nd Gear To 4th Gear (Countershaft) (1.539") 1
90268B ..... Caged Needle Bearing, S24A / A24A / A4RA / M4TA / B4RA / M24A / MDLA / BMXA / SP7A / MP7A / S4XA 4th Gear To Countershaft (1.270"OD) (.812" Thick) 1
90271B ..... Caged Needle Bearing, S24A / A24A / A4RA / M4TA / B4RA / M24A / MDLA / BMXA / SP7A / MP7A / S4XA Reverse Gear (Countershaft) (1.460"OD) (.540" Wide) (Use 90279B) 1
90272B ..... Collar, S24A / A24A / M4TA / M24A / SP7A / MP7A Reverse Gear (Countershaft) 2 Notch (1.845"OD Shoulder) (1.259"OD) (1.023"ID) (.572" Thick) (Use 90278B) 1
90272D ..... Collar, A4RA / B4RA / BMXA / S4XA Reverse Gear (Countershaft) 4 Notch (1.840"OD Of Shoulder) (1.259"OD) (1.023"OD) (.572" Thick) (Use 90278D) 1
60274C ..... Ball Bearing, S24A / A24A / A4RA / M4TA / B4RA / M24A / MDLA / BMXA / MP7A / SP7A / S4XA Case To Countershaft (2.670"OD) 1
60274CA ..... Roller Bearing, S24A / A24A / M4TA / M24A / MDLA / BMXA / MP7A / SP7A / S4XA Mainshaft To Case (2.952"OD) 1
90278B ..... Collar, S24A / A24A / M4TA / M24A / SP7A / MP7A Low Gear (Countershaft) 2 Notch (1.845"OD Shoulder) (1.259"OD) (1.023"ID) (.572" Thick) (Also Fits Reverse Gear (Countershaft) 1-2
90278D ..... Collar, A4RA / B4RA / BMXA / S4XA Low Gear (Countershaft) 4 Notch (1.840"OD Of Shoulder) (1.259"OD) (1.023"OD) (.572" Thick) (Also Fits Reverse Gear (Countershaft) 1-2
90279B ..... Caged Needle Bearing, S24A / A24A / A4RA / M4TA / B4RA / M24A / MDLA / BMXA / SP7A / MP7A / S4XA Low Gear To Collar (Countershaft) (1.460"OD) (.540" Wide) (Also Fits 4th Gear To Countershaft) 1-2
80283 ..... Caged Needle Bearing, S24A / A24A / A4RA / M4TA / B4RA / M24A / MDLA / BMXA / MP7A / SP7A / S4XA Reverse Idler (14 Needles) 1
90295E ..... Washer, M4TA / BMXA / S4XA Under Mainshaft Nut (1.204"OD) 1
90297E ..... Washer, M4TA / BMXA / SP7A / MP7A / S4XA Under Countershaft Nut (1.400"OD) 1

PART #	GASKETS & RUBBER COMPONENTS	QTY.	REFERENCE #

90305E ..... Gasket, M4TA/MDLA/MDMA/MP7A/S4XA/SKWA/SP7A Case To Rear Cover 1994-01 (Also Fits A24A/A4RA/B46A/B4RA/BDRA/M24A/M4RA/S24A/S4RA Case To Rear Cover 1992-00) 1
90305M ..... Gasket, BMXA/SLXA Rear Cover (Side Cover) 2001-Up 1
60313A ..... O-Ring, Honda Converter (OE Upgraded)(Fits On ConverterHub, Inside Of Drive Pump Gear) 1
90318EA ..... Gasket, M4TA/MDLA/MDMA/MP7A/S4XA/SKWA/SP7A Bell Housing To Case (2WD) 1994-01 (Also Fits A24A/A4RA/B46A/B4RA/BDRA/M24A/M4RA/S24A/S4RA Bell Housing To Case 1992-00) 1
90318EB ..... Gasket, M4TA/MDLA/MDMA/MP7A/S4XA/SKWA/SP7A Bell Housing To Case (4WD) 1997-01 1
90318M ..... Gasket, BMXA/SLXA Bell Housing To Case 2001-Up 1
90379E ..... Seal, A4RA / B4RA / MDMA / M4TA / MP7A / SP7A / S4XA Filter 1

PART #	TECHNICAL MANUALS	QTY.	REFERENCE #

90400A ..... Technical Manual, M24A / A24A / S24A 1992-93 1

PART #	ELECTRICAL COMPONENTS	QTY.	REFERENCE #

80410D ..... Switch, MDLA/ M4TA Neutral Safety (On Rear Cover) 1
90410L ..... Switch, MDMA Neutral Safety (2 Bolt)(9 Pin Connector With Wire Harness) 1
90410M ..... Switch, BMXA Neutral Safety (2 Bolt, 10 Pin Connector) 1
20411D ..... Switch, MRVA 2nd & 3rd Clutch Pressure (Screws In The Bell Housing)(Grey Connector)(Flat) (33 PSI) 1
90421M ..... Solenoid, BMXA Shift (On The Outside Rear Of Case) (Dual With Wire Harness With 2 Prong Connector) 2001-05 1
30422B ..... Solenoid, BMXA On Bell Housing (Black Solenoid) 1
90423D ..... Solenoid, A4RA/B4RA/M4TA/MDLA/MDMA Linear (Single With 4 Bolt Mounting Block) 1996-01 1
90423M ..... Solenoid, BMXA/SLXA Linear (Dual With Mounting Block) 2001-05 1
90425B ..... Solenoid Assembly, A24A / S24A / A4RA / M4TA / B4RA / M24A / B46A / MDLA / MP7A / SP7A / A2YA / M4RA / M4VA / MDMA / S24A Lock-Up (Has 2 1/2" Wire Harness) (Is On Outside Top Of Bell) (3 Bolt) (Dual Solenoid) ..... 1 ..... 28300-P24-J01
90425D ..... Solenoid Assembly, A4RA / B4RA / M4RA / M4TA / B46A / M4VA / MDLA / MDMA / SDMA Shift (Has 5 1/2" Wire Harness) (On Outside Of Case) (3 Bolt) (Dual Solenoid) ..... 1 ..... 28200-P4R-003
90425H ..... Solenoid Assembly, MP7A / SP7A / S4XA Shift 1994-97 (Has 18" Wire Harness) (On Outside Of Case) (3 Bolt) (Dual Solenoid) ..... 1 ..... 28200-P56-003
90425M ..... Solenoid, BMXA On Bell Housing (Single) (Use 30422B) 1
90436D ..... Sensor, A4RA/B4RA/M4TA/MDLA/SDMA/BMXA (Plastic)(2 Wire Connector)(3 3/4" Long, Straight) (1 Bolt) On Top Side Of Case 1
90436H ..... Sensor, SP7A/MP7A/S4XA Output (1 Bolt, 2 Wire, 8" Long Harness, 3/4" Wide Connector) 1
90436HA ..... Sensor, SP7A/MP7A/S4XA Output (1 Bolt, 2 Wire, 8" Long Harness, 1" Wide Connector) 1
90438D ..... Sensor, A4RA / BMXA / B4RA / MDLA / MDMA / M4RA / SLXA (Plastic)(2 Prong Connector) (1 3/4" Long) (1 Bolt) On Top Of Rear Cover 1

© Whatever It Takes Transmission Parts. Inc.

PART #	MISC. COMPONENTS (Continued)	QTY.	REFERENCE #
90490B	Vent, S24A / A24A / M24A (3 Bolt) Aluminum (On Rear Cover)	1	
30492A	Drain Plug, S24A / A24A / A4RA / M4TA / B4RA / M24A / MDLA / BMXA / SP7A / MP7A / S4XA	1	
90493B	Dipstick, S24A / A24A / A4RA / M4TA / B4RA / M24A / BMXA / SP7A / MP7A / S4XA	1	
90495B	Intake Pipe, S24A / A24A / M24A Filter (8" Long) With Shield & 1 Hole Bracket)	1	
90507B-3	Pin, S24A / A24A / A4RA / M4TA / B4RA / M24A / MDLA / BMXA / SP7A / MP7A / S4XA (Inner Pump Gear) (1.685" Long) (.550"OD)	1	

PART #	HARD PARTS	QTY.	REFERENCE #
90529B	Converter Reactor, S24A / A24A / A4RA / M4TA / B4RA / M24A / MDLA / BMXA / SP7A / MP7A / S4XA (Stator) (With Cast # P24, P4R, P4P) (These All Interchange)	1	
60530C	Pump Gears, S24A / A24A / M24A / A4RA / M4TA / B4RA / MDLA / SP7A / MP7A / S4XA (38 Spline Gear) 28 Teeth (.470" Thick)	1	
90550D	Drum, A4RA / B4RA / BMXA 2-4 Clutch (18 Teeth Steels) Stamped Steel (2.370" Overall Thickness) (.125" Thick Hub) (.100" Thick Ears)	1	
60550E	Drum, M4TA / SP7A / MP7A / S4XA 2-4 Clutch (Less Pistons) (With Thick Hub)	1	
60550G	Drum, S24A / A24A / M24A 2-4 Clutch (Less Pistons)	1	
90554B	Drum, S24A / M4TA / MDLA / SP7A / S4XA Low/Hold Clutch (Secondary Shaft) (1.175" Tall)	1	
90554C	Drum, A24A / M24A / MP7A Low/Hold Clutch (Secondary Shaft) (1.192" Tall)	1	
60554C	Drum, SP7A/MP7A 1st Clutch	1	
90555B	Drum, S24A / A24A / M24A 3rd Clutch (8 Teeth Steels) (1.262" Tall) (1.426"ID Bore) (1.580"OD Hub)	1	
90555D	Drum, A4RA / B4RA / BMXA 3rd Clutch (18 Teeth Steels) (1.240" Tall) (1.425"ID Bore) (1.660"OD Hub)	1	
90555E	Drum, M4TA / MDLA / SP7A / MP7A / S4XA 3rd Clutch (10 Teeth Steels) (1.275" Tall) (1.430"ID Bore Stepped To 1.398"ID) (1.580"OD Hub)	1	

PART #	SPRAGS & ONE WAY CLUTCHES	QTY.	REFERENCE #
90557B	Drum, S24A / A24A / M24A 1st Clutch (8 Teeth Steels) (Sealing Ring Is On The Clutch Side Of Drum)	1	
90557D	Drum, A4RA / B4RA / BMXA 1st Clutch (18 Teeth Steels) (Sealing Ring Is On The Clutch Side Of Drum)	1	
90557E	Drum, M4TA / MDLA 1st Clutch (10 Teeth Steels) Sealing Ring Is On The Clutch Side Of Drum	1	
90557H	Drum, SP7A / MP7A 1st Clutch (10 Teeth Steels) Sealing Ring Is On The Clutch Side Of Drum	1	
90564B	Piston Kit, S24A / A24A / M4TA Low/Hold Clutch (Secondary Shaft)	1	
90658B	Sprag, S24A / A24A / A4RA / M4TA / B4RA / M24A / MDLA / BMXA / SP7A / MP7A / S4XA Low (28 Lugs)	1	

PART #	HARD PARTS (Continued)	QTY.	REFERENCE #
90672B	Mainshaft, S24A / A24A / M24A (40 Teeth / No Groove) 15 1/2" Long	1	
90672D	Mainshaft, A4RA (41 Teeth / 1 Wide Groove)	1	
90672E	Mainshaft, M4TA (38 Teeth / 1 Wide & 1 Narrow Groove) 15 1/2" Long	1	
90672F	Mainshaft, B4RA / S4XA (40 Teeth / 2 Grooves)	1	
90672H	Mainshaft, SP7A / MP7A (40 Teeth / 3 Grooves) 15 5/8" Long	1	
90672M	Mainshaft, BMXA (40 Teeth / 3 Grooves, 1 Wide & 2 Narrow) 15 5/8" Long	1	
90675B	Secondary Shaft, S24A / A24A / M4TA / M24A / MDLA (5 3/5" Long) (Also Fits BMXA/SP7A/MP7A/S4XA)	1	
90676B	Countershaft, S24A / A24A / M24A (15 Teeth / 1 Groove) 11" Long	1	
90676D	Countershaft, A4RA / B4RA / S4XA (14 Teeth / 3 Groove) 11 1/4" Long	1	
90676E	Countershaft, M4TA / MDLA (14 Teeth / 4 Groove) 11 1/4" Long (1 Wide Groove & 3 Narrow Grooves)	1	
90676H	Countershaft, SP7A / MP7A (14 Teeth / No Groove) (11 1/4" Long)	1	
90676M	Countershaft, BMXA (15 Teeth / No Groove) (11 1/4" Long)	1	
90676MA	Countershaft, BMXA (14 Teeth / 2 Groove)(11 1/4" Long)	1	
90680B	Governor Assembly, S24A / A24A / M24A / (Cast # P24) (17 Teeth)	1	
60689A	Plate, S24A / A24A / A4RA / M4TA / B4RA / M24A Oil (Countershaft)	1	
90689B	Cup, S24A / A24A / M4TA / M24A / SP7A / MP7A / S4XA Oil (On End Of Secondary Shaft)	1	
90689J	Cup, MDLA Oil (On End Of Secondary Shaft) (With Short Tube)	1	
90690B	Gear, S24A / A24A / M24A Park (18 Lugs / 5 Top Notches) (Countershaft) (4.405"OD) (2.626"OD Sprag Race) (.390" Thick Lugs)	1	
90690D	Gear, A4RA / M4TA / B4RA / BMXA / SP7A / MP7A / S4XA Park (18 Lugs / No Top Notches) (Countershaft) (4.405"OD) (2.626"OD Sprag Race) (.390" Thick Lugs)	1	
90694B	Retainer, S24A / A24A / M4TA / M24A (Some M4TA) Holds Bearing # 248 To Shaft (1 5/8" Long)	1	
90694J	Retainer, M4TA / MDLA /SP7A / MP7A / S4XA (Some M4TA) Holds Bearing #248 To Shaft (1 1/4" Long)	1	

© Whatever It Takes Transmission Parts. Inc.

90698E ..... Oil Baffle, M4TA / SP7A / MP7A / S4XA Differential (Tin) 1
90715B ..... Differential Assembly, S24A / A24A / M24A (65 Teeth / 2 Groove) 1
90715D ..... Differential Assembly, A4RA / B4RA (61 Teeth / 3 Groove) (23 Teeth Speed-O) 2 Narrow Grooves & 1 Wide Groove (1.010"ID Axle Hole) 1
90715E ..... Differential Assembly, M4TA (61 Teeth / 4 Groove) (26 Teeth Speed-O) (53 Teeth Middle Gear) All Wheel Drive (3 Narrow Grooves & 1 Wide Groove) 1
90715H ..... Differential Assembly, SP7A / MP7A (61 Teeth / 3 Groove) (23 Teeth Speed-O) 1
90715HA ..... Differential Assembly, S4XA (61 Teeth / 3 Groove) (23 Teeth Speed-O) 2 Narrow Grooves & 1 Wide Groove (1.100"ID Axle Hole) 1
90715J ..... Differential Assembly, MDLA (61 Teeth / 4 Grooves) (26 Teeth Speed-O) 2 Wheel Drive (3 Narrow Grooves & 1 Wide Groove) 1
90715M ..... Differential Assembly, BMXA (61 Teeth / 2 Wide Grooves) (23 Teeth Speed-O) 1
90740B ..... Valve Body, S24A/ M24A (Cast # P24) Less Pump Gears 1
90740C ..... Valve Body, A24A (Cast # P24Y) Less Pump Gears 1
90740D ..... Valve Body, A4RA / M4TA / B4RA (Cast # P4R1 or P4R2) Less Pump Gears 1
90740H ..... Valve Body, SP7A / MP7A / S4XA (Cast # HM-1, P56, Or E-2) Less Pump Gears 1
90740J ..... Valve Body, MDLA (Cast # PDMX) Less Pump Gears 1
90740M ..... Valve Body, BMXA (Cast # PLX2) Less Pump Gears 1
90740MA ..... Valve Body, BMXA (Cast # PLX1 or PLX3) (Less Pump Gears) 1

PART #	VALVE BODY COMPONENTS	QTY.	REFERENCE #

80741-1 ..... Valve & Spring, S24A / A24A / A4RA / M4TA / B4RA / M24A / SP7A / MP7A / S4XA / BMXA (Converter Check Valve) (In Valve Body) 1
90741B-5 ..... Check Ball, S24A /A24A / A4RA / M4TA / B4RA / M24A Valve Body (.210"OD) Steel ..... AR
90741D-3 ..... Spring, A4RA / B4RA / M4RA CPC Valve 1996-99 1
90747B ..... Seperator Plate, S24A / A24A / M24A Valve Body 1
90747D ..... Seperator Plate, A4RA / B4RA Valve Body 1
90747E ..... Seperator Plate, M4TA Valve Body 1
90747H ..... Seperator Plate, SP7A / MP7A / S4XA (Valve Body) 1
90747J ..... Seperator Plate, MDLA Valve Body 1
90747L ..... Seperator Plate, MDMA Valve Body 1
90747M ..... Seperator Plate, BMXA Valve Body 1
90749B ..... Cam, S24A / A24A / M24A / SP7A / MP7A / S4XA (TV Link) Pie Shaped 1

PART #	HARD PARTS (Continued)	QTY.	REFERENCE #

90750B ..... Bell Housing, S24A / A24A / M24A (Cast # P24JO) 5 3/8" Top Bolts (A24A Has No Cast # But Is The Same As This One) 1
90750D ..... Bell Housing, A4RA / B54RA (Cast # P4R) 5 3/8" Top Bolts 1
90750E ..... Bell Housing, M4TA (Cast # PDM) 5 1/2" Top Bolts (All Wheel Drive) 1
90750H ..... Bell Housing, SP7A / MP7A / S4XA (Cast # P56) 5 1/2" Top Bolts 1
90750J ..... Bell Housing, MDLA (Cast # PDL) 5 1/2" Top Bolts 1
90750M ..... Bell Housing, BMXA (Cast # PLX) 5 1/2" Top Bolts 1
90759B ..... Rear Cover, S24A / A24A / M24A (Cast # P24) 1
90759D ..... Rear Cover, A4RA / B4RA (Cast # P4R) No Linkage Seal 1
90759E ..... Rear Cover, M4TA / MDLA (Cast # P4R, PDM) With Linkage Seal 1
90759H ..... Rear Cover, SP7A / MP7A (Cast # P56) 1
90759HA ..... Rear Cover, S4XA (Cast # P4X, P4T, Or P6M) 1
90759M ..... Rear Cover, BMXA (Cast # PLX) 1
90760B ..... Case, S24A / A24A / M24A (18 Bolt) No Solenoid 1
90760D ..... Case, A4RA / B4RA (18 Bolt) 3 Bolt Dual Solenoid (4 Bolt Single Solenoid) Top Vent 1
90760E ..... Case, M4TA (19 Bolt) 3 Bolt Dual Solenoid (4 Bolt Single Solenoid) Top Vent (All Wheel Drive) 1
90760H ..... Case, SP7A / MP7A / S4XA (18 Bolt) 3 Bolt Dual Solenoid (Top Vent) 1
90760J ..... Case, MDLA/MDMA AWD (19 Bolt)(3 Bolt Dual Solenoid)(4 Bolt Single Solenoid) 1
90760M ..... Case, BMXA (18 Bolt) (3 Bolt Dual Solenoid & 6 Bolt Dual Solenoid) Top Vent 1
90774B ..... Speed-O Housing, S24A / A24A / M24A / MDLA / SP7A / MP7A / S4XA (Aluminum) 20 Teeth (With 3 Pin Connector) (Has A 2 Bolt Sensor Mounted On Top) 1
90774D ..... Speed-O Housing, A4RA / M4TA / B4RA / BMXA (Plastic) 20 Teeth (With 3 Pin Connector) (Sensor Is Made Into The Speed-O Housing) 1
90774M ..... Speed-O Housing, BMXA (Plastic) 19 Teeth (With 3 Pin Connector) Sensor Is Made Into The Speed-O Housing 1
90776BK ..... Bolt Set, S24A / A24A / M24A Case To Bell (18 Pieces) 1
90776HK ..... Bolt Set, SP7A / MP7A / S4XA / BMXA Case To Bell (18 Pieces) 1
90776DK ..... Bolt Set, A4RA / B4RA / MDLA Case To Bell (18 Pieces) 1
90776EK ..... Bolt Set, M4TA Case To Bell (19 Pieces) 1
90776HK ..... Bolt Set, SP7A / MP7A / S4XA Case To Bell (18 Pieces) 1
90782BK ..... Bolt Set, S24A / A24A / M24A / SP7A / MP7A / S4XA Valve Body To Bell (4 Pieces) 1
90782DK ..... Bolt Set, A4RA / M4TA / B4RA / MDLA / BMXA Valve Body To Bell (5 Pieces) 1

© Whatever It Takes Transmission Parts. Inc.

PART #	HARD PARTS (Continued)	QTY.	REFERENCE #
90784BK	Bolt Set, S24A / A24A / M24A Holds Servo Assembly To Valve Body	1	
90784DK	Bolt Set, A4RA / M4TA Holds Servo To Valve Body	1	
90784FK	Bolt Set, B4RA / BMXA Holds Servo To Valve Body	1	
90784HK	Bolt Set, SP7A / MP7A / S4XA Holds Servo To Valve Body (11 Pieces)	1	
90786BK	Bolt Set, S24A / A24A / M24A / SP7A / MP7A / S4XA Regulator To Valve Body (8 Pieces)	1	
90786DK	Bolt Set, A4RA / M4TA / B4RA / BMXA Regulator To Valve Body (8 Pieces)	1	
90790A	Bolt, A24A / M24A / S24A / M4TA / MDLA / SP7A / MP7A / S4XA Holds Secondary Shaft Bearing Retainer To Case (1 1/4" Long)	1	
80795	Nut, M4TA / MDLA (Countershaft) (Left Hand Threads) (.435" Thick)	1	
60795A	Nut, A24A / M24A / S24A (Mainshaft) (Left Hand Threads)	1	
90795D	Nut, A4RA / B4RA / M4TA / MDLA / BMXA / S4XA (Mainshaft) (Left Hand Threads)	1	
90796B	Nut, S24A / A24A / M24A / M24A / MDLA / SP7A / MP7A / SX4A (Secondary Shaft) (Right Hand Threads)	1	
90796D	Nut, B4RA / A4RA / MP7A / SP7A / S4XA / BMXA (Countershaft) (Left Hand Threads)	1	
60796E	Nut, S24A / A24A / M24A (Countershaft) (.845"ID) (Right Hand Threads)	1	
90796H	Use 40796A	1	
40796A	Nut, BMXA/MP7A/SP7A/S4XA (Countershaft)(Left Hand Thread)(.515" Thick)	1	
90800B	Gear, S24A / A24A / M24A 1st (Mainshaft) 20 Teeth (1 Groove) 38 Teeth Hub (1.710" Overall Height)	1	
90800D	Gear, A4RA / B4RA 1st (Mainshaft) 20 Teeth (No Groove) 38 Teeth Hub (1.890" Overall Height)	1	
90800E	Gear, M4TA / MDLA / BMXA / S4XA 1st (Mainshaft) 18 Teeth (1 Groove) 38 Teeth Hub (1.875" Overall Height)	1	
90800H	Gear, SP7A / MP7A 1st (Mainshaft) 18 Teeth (1 Groove) 41 Teeth Hub (1.755" Overall Height)	1	
90801B	Gear, S24A / A24A / M24A / SP7A / MP7A Low (Countershaft) 52 Teeth (1 Groove) 4.950"OD (1.495"ID) .860" Thick	1	
90801D	Gear, A4RA Low (Countershaft) 52 Teeth (No Groove) 4.950"OD (1.495"ID) .860" Thick	1	
90801E	Gear, M4TA / B4RA / MDLA / BMXA / S4XA Low (Countershaft) 49 Teeth (1 Groove) 4.795"OD (1.495"ID) .860"OD Thick	1	
90802B	Gear, S24A / A24A / M24A Low (Secondary Shaft) 52 Teeth (No Groove) Left Angle (With 2 Holes)	1	
90802E	Gear, M4TA / MDLA / S4XA Low (Secondary Shaft) 49 Teeth (1 Groove) Right Angle (Also Fits SPXA) (Has 6 Holes And Will Retro Fit With The 2 Hole)	1	
90802H	Gear, SP7A / MP7A Low (Secondary Shaft) 49 Teeth (1 Groove) Right Angle (With 2 Holes)	1	
90803B	Gear, S24A / A24A / M24A 2nd (Mainshaft) 32 Teeth (No Groove) 2.895"OD (1.615"ID) 1.325" Tall	1	
90803D	Gear, A4RA 2nd (Mainshaft) 32 Teeth (2 Groove) 2.895"OD (1.615"ID) 1.325" Tall	1	
90803E	Gear, M4TA / MDLA / S4XA 2nd (Mainshaft) 31 Teeth (2 Wide Grooves) 2.870"OD (1.615"ID)	1	
90803F	Gear, B4RA 2nd (Mainshaft) 31 Teeth (2 Narrow Grooves) 2.895"OD (1.615"ID) 1.325" Tall	1	
90803H	Gear, SP7A / MP7A 2nd (Mainshaft) 32 Teeth (1 Groove) 2.895"OD (1.615"ID) 1.275" Tall	1	
90803M	Gear, BMXA 2nd (Mainshaft) 32 Teeth (2 Grooves) 2.895"OD (1.615"ID) 1.325" Tall	1	
90804B	Gear, S24A / A24A / M24A 2nd (Countershaft) 47 Teeth (No Groove) ID Splines Are Away From Gear End Of Nose (.240" Deep Bearing Pocket)	1	
90804D	Gear, A4RA / M4TA / B4RA / MDLA / BMXA / S4XA 2nd (Countershaft) 47 Teeth (2 Groove)	1	
90804H	Gear, SP7A / MP7A 2nd (Countershaft) 47 Teeth (No Groove)	1	
90807B	Gear, S24A / A24A / M24A 3rd (Countershaft) 39 Teeth (No Groove)	1	
90807D	Gear, A4RA / SP7A / MP7A 3rd (Countershaft) 39 Teeth (1 Wide Groove)	1	
90807E	Gear, M4TA / MDLA 3rd (Countershaft) 41 Teeth (No Groove)	1	
90807F	Gear, B4RA / BMXA / S4XA 3rd (Countershaft) 39 Teeth (2 Groove)	1	
90809B	Gear, S24A / A24A 4th (Mainshaft) 46 Teeth Big Gear (2 Grooves) 22 Teeth Small Gear (38 Teeth Hub)	1	
90809D	Gear, A4RA / B4RA 4th Gear (Mainshaft) 47 Teeth Big Gear (1 Groove) 22 Teeth Small Gear (38 Teeth Hub)	1	
90809E	Gear, M4TA / MDLA / BMXA 4th (Mainshaft) 45 Teeth Big Gear (2 Groove) 22 Teeth Small Gear (38 Teeth Hub)	1	
90809G	Gear, M24A / SP7A / MP7A 4th (Mainshaft) 47 Teeth Big Gear (No Groove) 22 Teeth Small Gear (38 Teeth Hub)	1	
90809M	Gear, BMXA / S4XA 4th (Mainshaft) 46 Teeth Big Bear, 1 Groove) (22 Teeth Small Gear) (38 Teeth Hub)	1	
90810B	Gear, A24A / S24A (Some) 4th (Countershaft) 31 Teeth (2 Groove)	1	
90810D	Gear, A4RA / B4RA / S4XA 4th (Countershaft) 30 Teeth (1 Groove)	1	
90810E	Gear, M4TA / MDLA 4th (Countershaft) 32 Teeth (2 Groove)	1	
90810G	Gear, M24A / S24A (Some) / SP7A / MP7A 4th (Countershaft) 30 Teeth (No Groove)	1	
90810M	Gear, BMXA 4th (Countershaft) 31 Teeth (1 Wide Groove)	1	
90811B	Gear, S24A / A24A 4th (Secondary Shaft) 31 Teeth (No Groove)	1	
90811E	Gear, M4TA / MDLA 4th (Secondary Sahft) 32 Teeth (2 Groove)	1	
90811G	Gear, M24A / SP7A / MP7A 4th (Secondary Shaft) 30 Teeth (3 Groove)	1	
90811HA	Gear, S4XA 4th (Secondary Shaft) 30 Teeth (1 Groove)	1	

© Whatever It Takes Transmission Parts. Inc.

90816B ..... Gear, S24A / A24A / M4TA / M24A / MDLA / BMXA / SP7A / MP7A / S4XA Reverse (Countershaft) 43 Teeth (No Grove) .470" Thick (Has 4 Wide Notches On Top) 1
90816D ..... Gear, A4RA / B4RA Reverse (Countershaft) 43 Teeth (No Groove) .485" Thick (Has 4 Small Notches On Top) 1
60818A ..... Gear, S24A / A24A / A4RA / M4TA / B4RA / M24A / MDLA / BMXA / SP7A / MP7A / S4XA Reverse Idler (27 Teeth) 1
90819B ..... Pin, S24A / A24A / A4RA / M4TA / B4RA Reverse Idler 1
90820B ..... Bracket, S24A / A24A / A4RA / M4TA / B4RA / M24A / BMXA / SP7A / MP7A / S4XA Reverse Idler 1
60830CA ..... Selector, S24A / A24A / A4RA / M4TA / B4RA / M24A / MDLA / BMXA / SP7A / MP7A / S4XA Reverse Countershaft (2.275"OD Where Fork Rides) Left Angled Teeth On Reverse Side, Pointed Teeth On 4th Gear Side 1
60835C ..... Hub, S24A / A24A / A4RA / M4TA / B4RA / M24A / BMXA / SP7A / MP7A / S4XA Reverse Countershaft 1
90840B ..... Shift Fork, S24A / A24A / A4RA / M4TA / B4RA / M24A / MDLA / BMXA SP7A / MP7A / S4XA (Cast # P24) 1
90850B ..... Cushion, S24A / A24A / A4RA / B4RA / M24A 1st/2nd/3rd/4th Clutch (3.980"OD) .078" Thick 1-4
90850BA ..... Cushion, S24A / A24A / A4RA / B4RA / M24A 1st/2nd/3rd/4th Clutch (3.980"OD) .070" Thick (3.430"ID) 1-4
90850BB ..... Cushion, S24A / A24A / A4RA / B4RA / M24A 1st/2nd/3rd/4th Clutch (3.980"OD) .060" Thick 1-4
60850C ..... Cushion, M4TA / MDLA / MDMA / MP7A / SKWA / SP7A / S4XA 1st/2nd/3rd/4th (4.200"OD) (.078" Thick) Waved Replaces Beveled Cushion 1-4
90850EA ..... Cushion, M4TA / MDLA 3rd Clutch (4.200"OD) .060" Thick 1
90850EB ..... Cushion, M4TA 2nd Clutch (4.200"OD) .045" Thick 1
90850H ..... Cushion, SP7A / MP7A / S4XA 1st/2nd/3rd/4th Clutch (4.200"OD) (.072" Thick) 1-4
90850M ..... Cushion, BMXA 1st/3rd/4th Clutch (3.985"OD) .071" Thick (Split Not Solid) Wavy Not Dished 1-3
90853B ..... Cushion, S24A / A24A / M24A / SP7A / MP7A / S4XA Low/Hold Clutch (Secondary Shaft) 3.615"OD (.064" Thick) 1
90853E ..... Cushion, M4TA / MDLA Low/Hold Clutch (Secondary Shaft) 3.615"OD (.075" Thick) 1
60861B ..... Snap Ring, S24A / A24A / A4RA / B4RA / M24A / BMXA Holds 1st/2nd/3rd/4th Clutch Pressure Plate In Drums 1-4
90861E ..... Snap Ring, BMXA / MDLA / MDMA / M4TA Holds 1st/2nd/3rd/4th Clutch Pressure Plate In Drums (4.688"OD) 1-4
90862B ..... Snap Ring, S24A / A24A / M4TA / M24A / MDLA / MPYA / M5DA Holds 1st/3rd/4th Clutch Retainer In (1.780"OD) .145" Thick ID To OD (Also Fits SP7A / MP7A / S4XA 1st Clutch & 4th Clutch) 1-4
90862BA ..... Snap Ring, A4RA / B4RA Holds 1st/2nd/3rd/4th Clutch Retainer In (1.810"OD) .120" Thick ID To OD (Also Fits S24A / A24A / M24A 2nd Clutch Drum) (Also Fits BMXA 1st/3rd/4th Clutch) 1-4
90862E ..... Snap Ring, M4TA / MDLA / MPWA Holds 2nd Clutch Retainer In (1.810"OD) .097" Thick ID To OD (Also Fits SP7A / MP7A / S4XA 2nd/3rd Clutch Retainer In) 1-2
90867B ..... Snap Ring, S24A / A24A / M4TA / M24A / MDLA / SP7A / MP7A / S4XA Holds Low/Hold Pressure Plate In Drum (Secondary Shaft) 4.275"OD (.060" Thick) 1
60870A ..... Snap Ring, S24A / A24A / A4RA / M4TA / B4RA / M24A Holds Bearing (#209) In Stator (Front) 1
90877B ..... Snap Ring, S24A / A24A / M4TA / M24A / MDLA / SP7A / MP7A / S4XA Holds Retainer In Low/Hold Drum (Secondary Shaft) 1.500"OD (.059" Thick) 1
60879C ..... Snap Ring, A24A / M24A / S24A / A4RA / B4RA / M4TA / MDLA / BMXA / SP7A / MP7A / S4XA Holds Caged Needle Bearing To Mainshaft 1
90881B ..... Snap Ring, S24A / A24A / A4RA / MDLA / M4TA / B4RA / M24A / BMXA / SP7A / MP7A / S4XA (Mainshaft) Round Wire (.040" Diameter) 1 1/16"OD 1
90883A ..... Snap Ring, S24A / A24A / A4RA / M4TA / B4RA / M24A / BMXA / MDLA Holds Mainshaft Bearing To Case (Use 60884CA) 1
60883C ..... Snap Ring, S24A / A24A / M4TA / MDLA / SP7A / MP7A / S4XA 2nd Shaft Ball Bearing To Case 1
60884C ..... Snap Ring, S24A / A24A / M4TA / B4RA / M24A / SP7A / MP7A / S4XA / BMXA Countershaft Bearing To Case With 2.670"OD To Case 1
60884CA ..... Snap Ring, S24A / A24A / A4RA / M4TA / B4RA / M24A / BMXA / MDLA Holds Mainshaft Bearing To Case 1
60887A ..... Split Washer, S24A / A24A / A4RA / M4TA / B4RA / M24A (Counter Shaft) (Horse Shoe) (2 Per Pack) 1
90889A ..... Snap Ring, S24A / A24A / M4TA / MDLA / SP7A / MP7A / S4XA 2nd Shaft Ball Bearing To Case (Use 60883C) 1
90899BA ..... Snap Ring, S24A / A24A / A4RA / M4TA / B4RA / M24A / MDLA / BMXA / SP7A / MP7A / S4XA Differential Bearing To Case .106" 1
90899BB ..... Snap Ring, S24A / A24A / A4RA / M4TA / B4RA / M24A / MDLA / BMXA / SP7A / MP7A / S4XA Differential Bearing To Case .108" 1
90899BC ..... Snap Ring, S24A / A24A / A4RA / M4TA / B4RA / M24A / MDLA / BMXA / SP7A / MP7A / S4XA Differential Bearing To Case .110" 1
90899BD ..... Snap Ring, S24A / A24A / A4RA / M4TA / B4RA / M24A / MDLA / BMXA / SP7A / MP7A / S4XA Differential Bearing To Case .112" 1

© Whatever It Takes Transmission Parts. Inc.

PART #	HARD PARTS (Continued)	QTY.	REFERENCE #
90899BE	Snap Ring, S24A / A24A / A4RA / M4TA / B4RA / M24A / MDLA / BMXA / SP7A / MP7A / S4XA Differential Bearing To Case .114”	1	
90900B	Servo Assembly, S24A / A24A / M24A (Cast # P24Y) With Secondary Valve Body	1	
90900B-2	Detent Housing, S24A / A24A / M24A Servo (Aluminum) 3 Bolt	1	
90900D	Servo Assembly, A4RA (Cast # P4R2) With Secondary Valve Body (Uses A 2 Bolt Shift Fork Detent On Top)(With 3rd Sub Accumulator Assembly)(Non Adjustable Pressure Valve) (Can Use 90900E)	1	
90900D-2	Detent Housing, A4RA / M4TA Servo (Aluminum) 2 Bolt	1	
90900E	Servo Assembly, M4TA (Cast # P4R-1) With Secondary Valve Body (Uses A 2 Bolt Shift Fork Detent On Top)(With 3rd Sub Accumulator Assembly)(Non Adjustable Pressure Valve) (Can Use 90900D)	1	
90900F	Servo Assembly, B4RA (Cast # P4R4) With Secondary Valve Body (Uses A Built In To Housing Shift Fork Detent)(Does Not Use The 3rd Sub Accumulator Assembly, Has An Unfinished Bore)(Non Adjustable Pressure Valve)	1	
90900H	Servo Assembly, SP7A / MP7A / S4XA (Cast # P56) With Secondary Valve Body (With 3 Bolt Shift Fork Detent On Top)(With 3rd Sub Accumulator Assembly)(With Adjustable Pressure Valve)	1	
90900J	Servo Assembly, MDLA (Cast # PDM)(With Secondary Valve Body)(Uses A Built In To Housing Shift Fork Detent)(With 3rd Sub Accumulator Assembly)(Non Adjustable Pressure Valve)	1	
90900K	Servo Assembly, BMXA/MDMA (Cast # P4R8) (With Secondary Valve Body)(Uses A Built In To Housing Shift Fork Detent)(With 3rd Sub Accumulator Assembly)(With Adjustable Pressure Valve)	1	
90900KA	Servo Assembly, SDMA (Cast # P4R8) (With Secondary Valve Body)(Uses A Built In To Housing Shift Fork Detent)(Does Not Use The 3rd Sub Accumulator Assembly, Has An Unfinished Bore) (With Adjustable Pressure Valve)	1	
90900M	Servo Assembly, BMXA (Cast # P4R)(With Secondary Valve Body) (Uses A Built In To Housing Shift Fork Detent) (With 3rd Accumulator Assembly)(Non Adjustable Pressure Valve)	1	
90900J	Servo Assembly, MDLA (Cast # PDM)	1	
90924B	Regulator, S24A / A24A / M24A / SP7A / MP7A / S4XA (2 Valves In Top Section Are Held In By Roll Pins) Some Have No Cast Number, Some Have P4P Casting	1	
90924D	Regulator, A4RA / M4TA / B4RA / MDLA / BMXA (Cast # P4R) 1 Valve In Top Section Is Held In By A Roll Pin (1 Has A Spring Clip)	1	
90940B	Accumulator Assembly, S24A / A24A / M24A / SP7A / MP7A / S4XA Low/Hold (In Rear Cover)	1	
70960C	Piston, SP7A / MP7A / S4XA 2nd Clutch (4.552”OD) (.318” Thick At Edge)	1	
90960B	Piston, A24A / M24A / S24A 2nd Clutch (1.700”ID) (Also Fits A4RA / B4RA 1st/3rd & 4th Clutch) (Also Fits BMXA 1st/3rd & 4th Clutch)	1-3	
90960D	Piston, A4RA / B4RA / BMXA 1st/2nd/3rd/4th Clutch (4.315”OD) 1.666”ID (.320” Thick) (Also Fits S24A / A24A/ M24A 2nd Clutch)	1-4	
90960E	Piston, M4TA / MDLA / SP7A / MP7A / S4XA 1st/3rd/4th Clutch (4.555”OD) 1.585”ID	1-3	
90960EA	Piston, M4TA 2nd Clutch (4.555”OD) 1.705”ID	1	
90960M	Piston, BMXA 2nd Clutch (4.315”OD) 1.665”ID (.355” Thick)	1	
90964B	Piston, S24A / A24A / M4TA / M24A / MDLA / SP7A / MP7A / S4XA Low/Hold Clutch (Secondary Shaft) 3.920”OD (1.340”ID) (.685” Through Center)	1	
90970B	Spring, S24A / A24A / A4RA / M4TA / B4RA / M24A / MDLA 1st/2nd/3rd/4th Clutch (2.450”OD) .238”OD Of Wire (Also Fits BMXA 1st/3rd/4th Clutch)	1-4	
90970BA	Spring, S24A / A24A / A4RA / M4TA / B4R4A / M24A / MDLA 1st/2nd/3rd/4th Clutch (2.490”OD) .250”OD Of Wire (Also Fits SP7A / MP7A / S4XA 1st/3rd/4th Clutch)	1-4	
90970BB	Spring, S24A / A24A / A4RA / M4TA / B4RA / M24A / MDLA 1st/2nd/3rd/4th Clutch (2.465”OD) .268”OD Of Wire (Gold Colored Square Wire)	1-4	
90970H	Spring, SP7A / MP7A / S4XA 2nd/4th Clutch (Use 60972C)	1-2	
60972C	Spring, SP7A / MP7A / S4XA 2nd/4th Clutch	1-2	
90974B	Spring, S24A / A24A / M4TA / M24A / MDLA / SP7A / MP7A / S4XA Low/Hold Clutch Return (Secondary Shaft) 2.125”OD (1.380” Tall) .205”OD Of Wire	1	
90980B	Retainer, S24A / A24A / M4TA / M24A / MDLA / MPYA / M5DA/ SP7A / MP7A / S4XA 1st/3rd/4th Clutch (2.450”OD) (1.600”ID)	1-3	
90980BA	Retainer, A4RA / B4RA 1st/2nd/4th Clutch (2.445”OD) 1.680”ID (Also Fits S24A / A24A / M24A 2nd Clutch) (Also Fits BMXA 1st/2nd/3rd/4th Clutch)	1-4	
90980E	Retainer, M4TA 2nd Clutch (2.445”OD) 1.715”ID (Also Fits SP7A / MP7A / S4XA 2nd Clutch)	1	
90984B	Retainer, S24A / A24A / M4TA / M24A / MDLA / SP7A / MP7A / S4XA Low/Hold Clutch Spring (Secondary Shaft) 2.065”OD (1.355”ID) .195” Thick	1	
90991B	Shift Rod, S24A / A4RA / B4RA / SP7A / S4XA (12 5/16” Long) Welded On Rooster Comb	1	
90991C	Shift Rod, A24A / M24A / MP7A (12 5/16” Long) Rooster Comb Held On By A Pin	1	
90991E	Shift Rod, M4TA / MDLA / BMXA (13 1/4” Long) Welded On Rooster Comb	1	
90995B	Park Pawl Assembly, S24A / A24A / A4RA / M4TA / B4RA / M24A / MDLA / BMXA / MP7A / SP7A / S4XA	1	
80996	Fitting, S24A / A24A / M24A / MDLA / M4TA / MP7A / SP7A / S4XA / BMXA Cooler Line (1 1/2" Long) Holds Cooler Line To Bell	1-2	

© Whatever It Takes Transmission Parts. Inc.

80996A	Fitting, S24A / A24A / M24A / MDLA / M4TA / MP7A / SP7A / S4XA / BMXA Cooler Line (4 5/8" Long) Holds Cooler Line To Bell	1
90999B	Tube Set, S24A / A24A / M24A (6 Tubes)	1
90999D	Tube Set, A4RA / B4RA (8 Tubes)	1
90999E	Tube Set, M4TA (10 Tubes)	1
90999H	Tube Set, SP7A / MP7A / S4XA (6 Tubes)	1
90999J	Tube Set, MDLA (6 Tubes)	1
90999M	Tube Set, BMXA (8 Tubes)	1

© Whatever It Takes Transmission Parts. Inc.

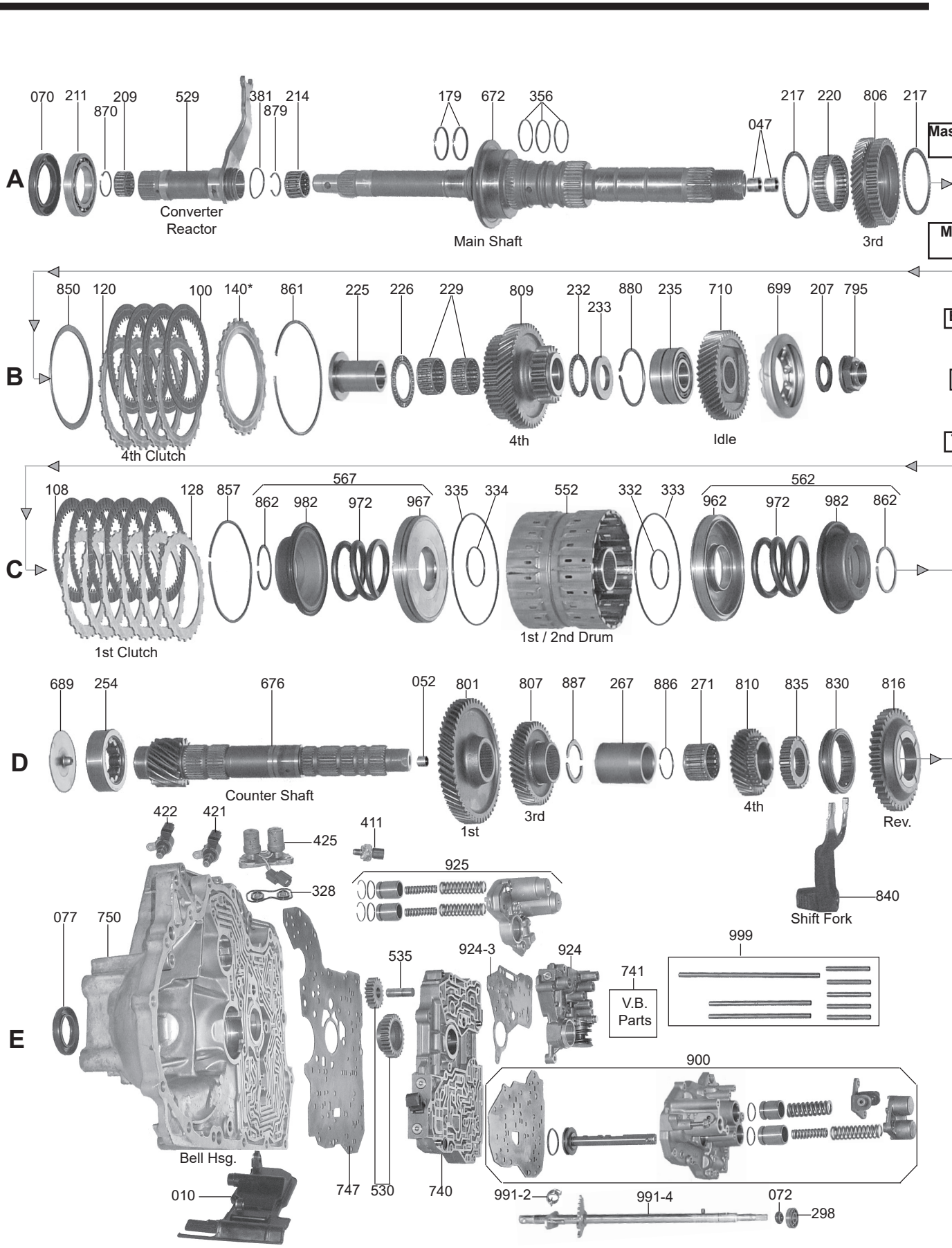

000 P&R Kit

002 OHK Kit

004 Master L/Steels Kit

006 Master W/Steels Kit

030 Bushing Kits

165 V.B. Kits

400 Tech Manual

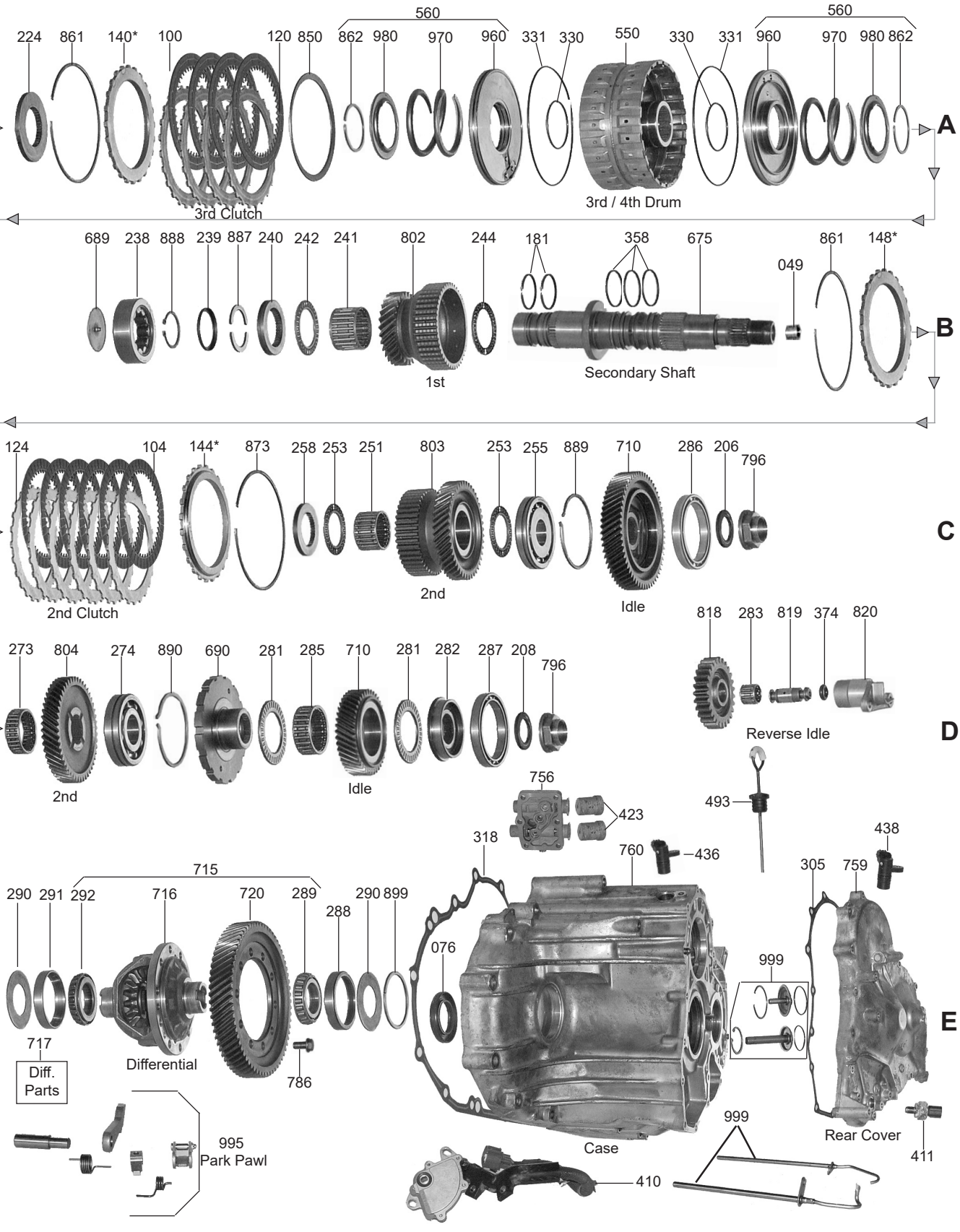

© Whatever It Takes Transmission Parts. Inc.

PART #	PAPER & RUBBER KIT	QTY.	REFERENCE #
30000A	Paper & Rubber Kit, MPZA 1995-97	1	
30000C	Paper & Rubber Kit, M6HA / BAXA / MAXA / MDWA 1997-Up (Prelude 1997-00) (Accord 4 Cylinder 1998-02, Odyssey 1998) (Isuzu Oasis 1998-99)	1	

PART #	OVERHAUL KITS	QTY.	REFERENCE #
30002A	Overhaul Kit, MPZA 1995-97	1	
30002CP	Overhaul Kit, BAXA / B6VA / MAXA / MDWA / M6HA 1997-02 (Prelude 1997-01) (Accord 4 Cylinder 1998-02, Odyssey 1998) (Isuzu Oasis 1998-99)(Acura 2.3CL 1998-99)(With Bonded Pistons For BAXA/B6VA/MAXA)	1	

PART #	MASTER L/STEEL KIT	QTY.	REFERENCE #
30004A	Master L/Steels Kit, MPZA (Accord With V-6) 1995-97	1	
30004CP	Master L/Steels Kit, BAXA/B6VA/MAXA/MDWA/M6HA 1997-02 (With Bonded Pistons For BAXA/B6VA/MAXA)	1	

PART #	MASTER W/STEEL KIT	QTY.	REFERENCE #
30006A	Master W/Steels Kit, MPZA (Accord With V-6) 1995-96	1	
30006CP	Master W/Steels Kit, BAXA/B6VA/MAXA/MDWA/M6HA 1997-02 (With Bonded Pistons For BAXA/B6VA)	1	

PART #	FILTER	QTY.	REFERENCE #
30010A	Filter, MPZA 1995-97	1	25420-POZ-000
30010D	Filter, BAXA / MAXA / B6VA / M6HA / MDWA	1	



30010D

70018C	Screen, BAXA / MAXA / B6VA / M6HA / MDWA (Some) (In Valve Body) (.570"OD) (.125" Thick Rubber Boot)	1	
70018CA	Screen, BAXA / MAXA / B6VA / M6HA / MDWA (Some) (In Valve Body) (.662"OD) (.315" Thick Rubber Boot)	1	

PART #	BUSHINGS	QTY.	REFERENCE #
30030A	Bushing Kit, B6VA/BAXA/M6HA/MPWA (Vigor)/MPZA (3 Pieces)	1	
T-28999	Tool Set, Acura/Honda (22 Pieces)(Bushing Remover & Installer)(This Set Works For All Honda With Bushings)	1	

PART #	METAL CLAD SEALS	QTY.	REFERENCE #
60070A	Seal, BAXA / MAXA / B6VA / M6HA Converter (44 x 68 x 8mm) Counter Clockwise Helix	1	
60072	Seal, BAXA / MAXA / B6VA / M6HA Manual Shaft	1	
80076	Seal, BAXA/MAXA/B6VA/M6HA Case	1	
30076A	Seal, MPZA Axle (Case Side) (35x54x8mm)	1	
60077E	Seal, MPZA Axle (Bell Housing Side) (38 x 54 x 8mm) 1988-Up	1	
60077H	Seal, BAXA / MAXA / B6VA / M6HA Axle (Bell Housing & Case Side) (40 x 56 x 9mm)	1	

PART #	FRICTION CLUTCH	QTY.	REFERENCE #
80100A	Friction, BAXA / B6VA / MAXA / MDWA / MGHA 3rd/4th Clutch (.076")(44 Teeth)(4.728"OD) (Also Fits MPZA 2nd/3rd/4th Clutch)	3-15	
30104C	Friction, BAXA / B6VA / MAXA / MDWA / MGHA 2nd Clutch (.076") 44 Teeth (4.579"OD)	4-5	
30108A	Friction, MPZA 1st Clutch (.076") 49 Teeth	4	
30108C	Friction, BAXA / B6VA / MAXA / MDWA / MGHA / M6HA 1st Clutch (.076") 44 Teeth (4.570"OD) (Also Fits BAXA/B6VA/MAXA/MDWA/MGHA/M6HA 2nd Clutch)	5-6	
30114A	Friction, MPZA Low/Hold Clutch (.076") 44 Teeth	3	
30119A	Friction Module, B6VA / BAXA / MAXA / M6HA / MDWA	1	
30119AS1	Friction Module, MPZA 1995-97 (Stage 1)	1	

© Whatever It Takes Transmission Parts. Inc.

PART #	STEEL CLUTCH	QTY.	REFERENCE #
30120C	Steel, B6VA / BAXA / MAXA / M6HA 3rd Clutch (.102") 24 Teeth (3.70ID) (Use 80124)	3	
30120A	Steel, MPZA 2nd/3rd/4th Clutch (.079") 24 Teeth (3.677"ID) (Use 80128A)	4-13	
80120A	Steel, B6VA / BAXA / MAXA / MDWA / M6HA 4th Clutch (.091") 24 Teeth (3.70"ID)	3	
80124	Steel, B6VA / BAXA / MAXA / MDWA / M6HA 3rd Clutch (.102") 24 Teeth (3.70"ID)	3	
30124B	Steel, B6VA / MAXA / BAXA 2nd Clutch (.090") 24 Teeth (3.595"ID)	5	
30124F	Steel, M6HA 2nd Clutch (.062") 24 Teeth (3.595"ID)	6	
30128A	Steel, MPZA 1st Clutch (.079") 18 Teeth (4.070"ID)	4	
80128A	Steel, MPZA 2nd/3rd/4th Clutch (.079") 24 Teeth (3.677"ID)	4-13	
30128C	Steel, B6VA / BAXA / MAXA / M6HA 1st Clutch (.078") 24 Teeth (3.600"ID)	5	
30134A	Steel, MPZA Low / Hold Clutch (.062") 6 Teeth	2	
30134AA	Steel, MPZA Low / Hold Clutch (.071") 6 Teeth	2	
30134AB	Steel, MPZA Low / Hold Clutch (.079") 6 Teeth	2	
30134AC	Steel, MPZA Low / Hold Clutch (.086") 6 Teeth	2	
30134AD	Steel, MPZA Low / Hold Clutch (.089") 6 Teeth	2	

PART #	CLUTCH PRESSURE PLATES	QTY.	REFERENCE #
80140AA	Pressure Plate, B6VA / BAXA / MAXA / M6HA 3rd/4th Clutch (#1 .082") (Also MPZA 2nd/3rd/4th Clutch)	1-3	
80140AB	Pressure Plate, B6VA / BAXA / MAXA / M6HA 3rd/4th Clutch (#2 .086") (Also MPZA 2nd/3rd/4th Clutch)	1-3	
80140AC	Pressure Plate, B6VA / BAXA / MAXA / M6HA 3rd/4th Clutch (#3 .090") (Also MPZA 2nd/3rd/4th Clutch)	1-3	
80140AD	Pressure Plate, B6VA / BAXA / MAXA / M6HA 3rd/4th Clutch (#4 .094") (Also MPZA 2nd/3rd/4th Clutch)	1-3	
80140AE	Pressure Plate, B6VA / BAXA / MAXA / M6HA 3rd/4th Clutch (#5 .098") (Also MPZA 2nd/3rd/4th Clutch)	1-3	
80140AF	Pressure Plate, B6VA / BAXA / MAXA / M6HA 3rd/4th Clutch (#6 .102") (Also MPZA 2nd/3rd/4th Clutch)	1-3	
80140AG	Pressure Plate, B6VA / BAXA / MAXA / M6HA 3rd/4th Clutch (#7 .106") (Also MPZA 2nd/3rd/4th Clutch)	1-3	
80140AH	Pressure Plate, B6VA / BAXA / MAXA / M6HA 3rd/4th Clutch (#8 .110") (Also MPZA 2nd/3rd/4th Clutch)	1-3	
80140AJ	Pressure Plate, B6VA / BAXA / MAXA / M6HA 3rd/4th Clutch (#9 .114") (Also MPZA 2nd/3rd/4th Clutch)	1-3	
30144B	Pressure Plate, B6VA / M6HA / MAXA / BAXA 1st/2nd Clutch (24 Teeth) (2.6mm) (3.595"ID)	1-2	
30144BA	Pressure Plate, B6VA / M6HA / MAXA / BAXA 1st/2nd Clutch (24 Teeth) (2.7mm) (3.595"ID)	1-2	
30144BB	Pressure Plate, B6VA / M6HA / MAXA / BAXA 1st/2nd Clutch (24 Teeth) (2.8mm) (3.595"ID)	1-2	
30144BC	Pressure Plate, B6VA / M6HA / MAXA / BAXA 1st/2nd Clutch (24 Teeth) (2.9mm) (3.595"ID)	1-2	
30144BD	Pressure Plate, B6VA / M6HA / MAXA / BAXA 1st/2nd Clutch (24 Teeth) (3.0mm) (3.595"ID)	1-2	
30144BE	Pressure Plate, B6VA / M6HA / MAXA / BAXA 1st/2nd Clutch (24 Teeth) (3.1mm) (3.595"ID)	1-2	
30144BF	Pressure Plate, B6VA / M6HA / MAXA / BAXA 1st/2nd Clutch (24 Teeth) (3.2mm) (3.595"ID)	1-2	
30144BG	Pressure Plate, B6VA / M6HA / MAXA / BAXA 1st/2nd Clutch (24 Teeth) (3.3mm) (3.595"ID)	1-2	
30144BH	Pressure Plate, B6VA / M6HA / MAXA / BAXA 1st/2nd Clutch (24 Teeth) (3.4mm) (3.595"ID)	1-2	
30148A	Pressure Plate, MPZA 1st Clutch (Selective) (18 Teeth)	1	
30148B	Pressure Plate, B6VA / M6HA / MAXA / BAXA 1st Clutch (Use 30144B-BH)	1	
30154A	Pressure Plate, MPZA Low/Hold Clutch (Stepped) (18 Teeth) (.197" Thick)	1	

PART #	VALVE BODY KITS	QTY.	REFERENCE #
S30165C	Valve Body Kit, BAXA/B6VA/MAXA/MDWA/M6HA (4 Speed, 4 Cylinder)(With .365"OD CPC Valves)(Contains: Pressure Regulator Valve, 2 CPC Valves, Springs & End Plugs)(Superior)	1-3	

PART #	WASHERS & BEARINGS	QTY.	REFERENCE #
30206A	Washer, BAXA/B6VA/MAXA/MDWA/MPZA/M6HA Under Secondary Shaft Nut (Also Under Mainshaft & Counter Shaft Nuts)	1-3	
30207A	Washer, MPZA / B6VA / BAXA / M6HA Under Mainshaft Shaft Nut (Use 30206A)	1	
30208A	Washer, MPZA / B6VA / BAXA / M6HA Under Countershaft Nut (Use 30206A)	1	
80209	Caged Needle Bearing, B6VA / BAXA / MAXA / M6HA Converter Reactor (Front) 1.040"OD	1	
80211	Ball Bearing, B6VA / BAXA / MAXA / M6HA Bell Housing To Converter (2.675"OD)	1	
90214C	Caged Needle Bearing, B6VA / M6HA / BAXA / MAXA Converter Reactor To Mainshaft (Rear) 1.115"OD (.695" Wide)	1	
30217A	Thrust Bearing, MPZA 3rd Gear To Mainshaft (.097" Thick) (2.900"OD)	2	
30217B	Thrust Bearing, M6VA / BAXA / MAXA / M6HA 3rd Gear (Mainshaft) (2.860"OD) (.077" Thick)	2	
30220A	Caged Needle Bearing, MPZA 3rd Gear (Mainshaft) (2.285"OD) (.750" Thick)	1	
30220B	Caged Needle Bearing, B6VA / M6HA / BAXA / MAXA 3rd Gear (Mainshaft) (2.375"OD) (.690" Thick)	1	
30224A	Race, MPZA 3rd Gear (Mainshaft) (.193" Thick) (2.870"OD)	1	

© Whatever It Takes Transmission Parts. Inc.

PART #	WASHERS & BEARINGS (Continued)	QTY.	REFERENCE #
30224B	Race, M6VA / BAXA / MAXA / M6HA 3rd Gear (Mainshaft) Stepped (2.835”OD)	1	
30225B	Collar W/Race, B6VA / BAXA / MAXA / M6HA 4th Gear (Mainshaft) (1.945”Long) (2.080”OD)	1	
30226B	Bearing, B6VA/BAXA/MAXA/M6HA 4th Gear (MS)(.097”Thick)(2.094”OD)(Also Fits B6VA/BAXA/MAXA/M6HA 2nd Gear (SS) #253)	1-3	
30226BA	Bearing, B6VA/BAXA/MAXA/M6HA 4th Gear (MS)(.097”Thick)(2.094”OD)(Also Fits B6VA/BAXA/MAXA/M6HA 2nd Gear (SS) #253)	1-3	
30229A	Caged Needle Bearing, MPZA 4th Gear (Mainshaft) (.770” Thick)	2	
30229B	Caged Needle Bearing, B6VA / BAXA / MAXA / M6HA 4th Gear (Mainshaft) (1.550”OD) (.693” Thick)	2	
30232A	Thrust Bearing, BAXA/B6VA/MAXA/MPZA/M76HA 4th Gear (Mainshaft) (1.800”OD)(.078” Thick)	1	
30233A	Race, MPZA 4th Gear (Mainshaft) (.530” Thick)	1	
30233B	Race, B6VA/BAXA/MAXA/M6HA 4th Gear To Ball Bearing (.194” Thick) (1.848”OD)	1	
30235A	Ball Bearing, MPZA Mainshaft To Case (SX05802NC3) (3.150”OD) (1.060”ID)	1	
30235B	Ball Bearing, M6HA / BAXA / MAXA / B6VA Mainshaft To Case (1.060” Thick) (2.365”OD)	1	
30238A	Ball Bearing, MPZA Secondary Shaft To Bell Housing (SX07C47)	1	
30238B	Roller Bearing, B6VA / BAXA / MAXA / M6HA Secondary Shaft To Bell Housing (.550” Thick) (SE-NK-34x46x14)	1	
30239A	Retainer, MPZA / B6VA / BAXA / MAXA / M6HA Horse Shoe Clips (Secondary Shaft) (1.740”OD)	1	
30240A	Race, BAXA/B6VA/MAXA/MPZA/M6HA Low Gear (Secondary Shaft)(2.69” Thick)(2.220”OD) (Also Fits BAYA/BGFA/BVGA/BYBA/B7TA/B7VA/B7WA/B7XA/B7ZA/MFYA/MGFA/MGHA/MGSA/M7WA/M7ZA #240)	1	
30240AA	Race, BAXA/B6VA/MAXA/MPZA/M6HA Low Gear (Secondary Shaft)(2.71” Thick)(2.220”OD) (Also Fits BAYA/BGFA/BVGA/BYBA/B7TA/B7VA/B7WA/B7XA/B7ZA/MFYA/MGFA/MGHA/MGSA/M7WA/M7ZA #240)	1	
30240AB	Race, BAXA/B6VA/MAXA/MPZA/M6HA Low Gear (Secondary Shaft)(2.73” Thick)(2.220”OD) (Also Fits BAYA/BGFA/BVGA/BYBA/B7TA/B7VA/B7WA/B7XA/B7ZA/MFYA/MGFA/MGHA/MGSA/M7WA/M7ZA #240)	1	
30240AC	Race, BAXA/B6VA/MAXA/MPZA/M6HA Low Gear (Secondary Shaft)(2.75” Thick)(2.220”OD) (Also Fits BAYA/BGFA/BVGA/BYBA/B7TA/B7VA/B7WA/B7XA/B7ZA/MFYA/MGFA/MGHA/MGSA/M7WA/M7ZA #240)	1	
30240AD	Race, BAXA/B6VA/MAXA/MPZA/M6HA Low Gear (Secondary Shaft)(2.77” Thick)(2.220”OD) (Also Fits BAYA/BGFA/BVGA/BYBA/B7TA/B7VA/B7WA/B7XA/B7ZA/MFYA/MGFA/MGHA/MGSA/M7WA/M7ZA #240)	1	
30240AE	Race, BAXA/B6VA/MAXA/MPZA/M6HA Low Gear (Secondary Shaft)(2.79” Thick)(2.220”OD) (Also Fits BAYA/BGFA/BVGA/BYBA/B7TA/B7VA/B7WA/B7XA/B7ZA/MFYA/MGFA/MGHA/MGSA/M7WA/M7ZA #240)	1	
30241A	Caged Needle Bearing, MPZA 1st Gear (Secondary Shaft) (.765” Thick) (1.695”OD)	1	
30241B	Caged Needle Bearing, B6VA / M6HA / BAXA / MAXA 1st Gear (Seconsary Shaft) (1.708”OD) (1.124” Thick)	1	
30244A	Bearing, MPZA 1st Gear (Both Sides) (2.230”OD) (.098” Thick)	1	
30244B	Bearing, B6VA / M6HA / BAXA / MAXA 1st Gear (Secondary Shaft)(Both Sides) (2.233”OD)(.097” Thick)	1	
30247A	Race, MPZA 2nd Gear To Drum (Secondary Shaft)(.193” Thick)(2.155”OD)	1	
30247AA	Race, MPZA 2nd Gear To Drum (Secondary Shaft)(.195” Thick)(2.155”OD)	1	
30247AB	Race, MPZA 2nd Gear To Drum (Secondary Shaft)(.197” Thick)(2.155”OD)	1	
30247AC	Race, MPZA 2nd Gear To Drum (Secondary Shaft)(.199” Thick)(2.155”OD)	1	
30247AD	Race, MPZA 2nd Gear To Drum (Secondary Shaft)(.201” Thick)(2.155”OD)	1	
30247AE	Race, MPZA 2nd Gear To Drum (Secondary Shaft)(.203” Thick)(2.155”OD)	1	
30247AF	Race, MPZA 2nd Gear To Drum (Secondary Shaft)(.205” Thick)(2.155”OD)	1	
30251A	Caged Needle Bearing, MPZA 2nd Gear (Secondary Shaft) (1.083” Thick) (1.540”OD)	1	
30251B	Caged Needle Bearing, B6VA / M6HA / MAXA / BAXA 2nd Gear (Secondary Shaft) (1.540”OD) (.929” Wide)	1	
30252A	Race, MPZA 2nd Gear (Secondary Shaft) (.212” Thick) (2 ID Notches)	1	
30253A	Thrust Bearing, B6VA / BAXA / MAXA / M6HA 2nd Gear (Secondary Shaft) (.097” Thick) (Use 30226B)	2	
30254B	Roller Bearing, BAXA / MAXA / M6HA / B6VA Secondary Shaft To Case (2.637”OD) (.744” Thick)	1	
30255A	Ball Bearing, MPZA Secondary Shaft To Case (SCO6852NC3) (3.230”OD) (1.210”ID)	1	
30255B	Ball Bearing, M6HA / BAXA / MAXA / B6VA Secondary Shaft To Case (2.953”OD) (SCO5855NC)	1	
80258AA	Race, B6VA / BAXA / MAXA / M6HA 2nd Gear To 1st-2nd Drum (.159”) With Inner Splines (Secondary Shaft)	1	
80258AB	Race, B6VA / BAXA / MAXA / M6HA 2nd Gear To 1st-2nd Drum (.161”) With Inner Splines (Secondary Shaft)	1	
80258AC	Race, B6VA / BAXA / MAXA / M6HA 2nd Gear To 1st-2nd Drum (.163”) With Inner Splines (Secondary Shaft)	1	

© Whatever It Takes Transmission Parts. Inc.

80258AD	Race, B6VA / BAXA / MAXA / M6HA 2nd Gear To 1st-2nd Drum (.165") With Inner Splines (Secondary Shaft)	1
80258AE	Race, B6VA / BAXA / MAXA / M6HA 2nd Gear To 1st-2nd Drum (.167") With Inner Splines (Secondary Shaft)	1
80258AF	Race, B6VA / BAXA / MAXA / M6HA 2nd Gear To 1st-2nd Drum (.169") With Inner Splines (Secondary Shaft)	1
80258AG	Race, B6VA / BAXA / MAXA / M6HA 2nd Gear To 1st-2nd Drum (.171") With Inner Splines (Secondary Shaft)	1
80258AH	Race, B6VA / BAXA / MAXA / M6HA 2nd Gear To 1st-2nd Drum (.173") With Inner Splines (Secondary Shaft)	1
80258AJ	Race, B6VA / BAXA / MAXA / M6HA 2nd Gear To 1st-2nd Drum (.175") With Inner Splines (Secondary Shaft)	1
30267A	Collar, MPZA Horse Shoe Clips To 4th Gear (Countershaft) (1.890" Long)	1
30267B	Collar, B6VA / BAXA / MAXA / M6HA Horse Shoe Clips To 4th Gear (Countershaft) (2.045" Long) (1.723"OD)	1
30269A	Collar, MPZA Clip Retainer (Countershaft) (1.845"OD) (.305" Thick)	1
30271A	Caged Needle Bearing, MPZA 4th Gear (Countershaft) Inner (1.007" Thick)	1
30271B	Caged Needle Bearing, B6VA / BAXA / MAXA / M6HA 4th Gear (Countershaft) (1.540"OD) (1.005" Thick)	1
30273A	Caged Needle Bearing, MPZA Reverse Gear (Countershaft) (.555" Thick) (1.795"OD)	1
30273B	Caged Needle Bearing, B6VA / BAXA / MAXA / M6HA Reverse Gear To Countershaft (1.770"OD) (.560" Thick)	1
30274B	Ball Bearing, M6HA / BAXA / MAXA / B6VA Countershaft To Case (.647" Thick) (B31-2NX1 or SX06C02NC3)	1
30280A	Race, MPZA (.196" Thick) (2.515"OD) Splined OD	1
30281A	Thrust Bearing, MPZA Driven Gear (Countershaft) (Both Sides)	2
30281B	Thrust Bearing, B6VA / BAXA / MAXA / M6HA Driven Gear (Countershaft) (Both Sides) (2.625"OD) (.177" Thick)	2
30282A	Washer, MPZA Reverse Idler Gear To Housing (.040" Thick) (1.175"OD) With Lip & 2 Notches	1
30282B	Inner Race, B6VA / BAXA / MAXA / M6HA Driven Transfer Gear To Bearing (Countershaft) (2.595"OD)	1
80283	Caged Needle Bearing, MPZA Reverse Idler (14 Rollers)	1
80283A	Caged Needle Bearing, B6VA / BAXA / MAXA / M6HA Reverse Idler (12 Rollers)	1
30284A	Washer, MPZA Reverse Idler Gear To Housing (.040" Thick) (1.175"OD) (Flat)	1
30285A	Caged Needle Bearing, MPZA Driven Transfer Gear (Countershaft) (.735" Thick) (1.950"OD)	1
30285B	Caged Needle Bearing, B6VA / BAXA / MAXA / M6HA Idler Gear To Countershaft (1.925"OD) (.730" Thick)	1
30286B	Ball Bearing, B6VA / BAXA / MAXA / M6HA Idler Gear To Rear Cover (.390" Thick)(3.070"OD) (2.360"ID)(Cast # TM8812X1C3) (Also Fits B6VA/BAXA/MAXA/M6HA # 287)	1
30287A	Ball Bearing, MPZA Driven Transfer Gear To Rear Cover (Countershaft) (3.032"OD) (2.145"ID)	1
30288	Cup Race, MPZA Differential To Case (Use 80291)	1
30288B	Cup Race, BAXA / MAXA / M6HA / B6VA Differential To Case (3.00"OD) (Cast # ET-CR-08A35ST)	1
30289B	Cone Bearing, B6VA / BAXA / MAXA / M6HA Differential To Case (21 Rollers) (Cast # ET-CR-0835ST)	1
30289BK	Cone Bearing W/Cup Race, B6VA / BAXA / MAXA / M6HA Differential To Case (21 Roller Bearing With Cast # ET-CR-0835ST Or # ETA-CR-08A72ST)(3.00"OD Cup Race With Cast # ET-CR-08A35ST Or # ETA-CR-08A72ST)	1
30290A	Shim, MPZA Differential Race To Bell -Selective Sizes (Can Use 80290)	1
30290B	Race, B6VA / BAXA / MAXA / M6HA Bell To Differential (3.140"OD) (.039" Thick)	1
30290BB	Race, BAXA / MAXA / M6HA / B6VA Differential To Case (2.990"OD) (.040" Thick)	1
80291	Cup Race, MPZA Differential To Bell Housing (4T30208STPX2) (Also Differential To Case)	1-2
30291A	Cup Race, MPZA Differential Race Both Sides (Cast # 4T30208STPX2)	1-2
30291B	Cup Race, BAXA/MAXA/M6HA/B6VA Differential To Bell (3.150"OD)(Cast #ET-CR-08A32ST Or ET-CR-09A14ST Or ETA-CR-08A71ST)	1
30292B	Cone Bearing, B6VA / BAXA / MAXA / M6HA Differential To Bell Housing (20 Rollers) (ET-CR-0834ST)(1.575"ID)	1
30292BK	Cone Bearing W/Cup Race, B6VA/BAXA/MAXA/M6HA Differential To Bell Housing (20 Roller Bearing, 1.575"ID, 3.150"OD Cup Race (Bearing Cast # ET-CR-0834ST Or ETA-CR-08A71ST)(Race Cast #ET-CR-08A32ST Or ET-CR-09A14ST Or ETA-CR-08A71ST)	1
30294A	Shim, MPZA Low Gear Ball Bearing To Sprag (Secondary Shaft)	1
30297A	Ball Bearing, MPZA Low Gear To Sprag (Both Sides Of Sprag)	1

PART #	GASKETS & RUBBER COMPONENTS	QTY.	REFERENCE #
30305C	Gasket, BAXA/B6VA/M6HA Rear Cover (With 2 Large Ports By Vent)(Accord 1998-99) (Prelude 1997)(Acura CL 1998-99)	1	21812-P6H-000
30305CA	Gasket, BAXA/MAXA/MDWA/M6HA Rear Cover (With 1 Large Port By Vent) (Accord 1999-02) (Prelude 1998-01)(Odyssey 1998)(Oasis 1998-99)	1	

© Whatever It Takes Transmission Parts. Inc.

PART #	GASKETS & RUBBER COMPONENTS (Continued)	QTY.	REFERENCE #
60313A	O-Ring, Honda Converter (OE Upgraded)(Fits On ConverterHub, Inside Of Drive Pump Gear)	1	
30318B	Gasket, BAXA/MAXA/B6VA/M6HA Bell Housing To Case 1997-00	1	
30318BA	Gasket, BAXA/MAXA/B6VA/M6HA/MDWA Bell Housing To Case 2001-02	1	

PART #	TECHNICAL MANUALS	QTY.	REFERENCE #
30400C	Technical Manual, BAXA/M6HA	1	

PART #	ELECTRICAL COMPONENTS	QTY.	REFERENCE #
30410C	Neutral Safety Switch, BAXA / MAXA / M6HA 2 Bolts To Rear Cover	1	
30411C	Sensor, BAXA / MAXA 2nd Clutch Pressure (Screws Into Bell Housing) (Green Connector)	1	
30411CA	Sensor, BAXA / B6VA / MAXA Pressure (Screws Into Rear Cover) (Black Connector) (1 Prong) (33 PSI)(Stepped)	1	
20411D	Switch, BAXA/MAXA 2nd & 3rd Clutch Pressure (Screws Into Bell Housing)(Grey, Black Or Beige Connector)	1	
30411E	Switch, MDWA 2nd & 3rd Clutch Pressure (Screws In Bell Housing)(Green Connector)(Flat) (38 PSI)(Also Fits MPJA)	1	
160411A	Switch, BAXA/B6VA/MAXA/M6HA Pressure (#411 Green Connector On Bell Housing (1.645” Long)	1	
80420	Solenoid Assembly, B6VA / BAXA / MAXA / M6HA / MDWA Shift (Outside Bell At 3:00) (Aluminum Base Is 4 1/4” Long)	1	
30421B	Solenoid, B6VA / BAXA / MAXA / M6HA / MDWA / MPZA Shift (Brown Connector) (The Bottom Solenoid On The Side Of The Bell)	1	
30422B	Solenoid, B6VA/BAXA/MAXA/M6HA/MDWA Shift (Black Solenoid) (The Top Solenoid On The Side Of The Bell)(Also BMXA #425)(Also BAYA/BYBA/B7WA/MFYA/MGHA/MGSA/M7WA #422 & #425)(Also B7TA/B7VA/B7XA/B7ZA # 422)(Also BVGA # 425)	1	
30423BK	Solenoid Assembly, BAXA/MAXA/B6VA/M6HA/MDWA Linear (Dual Solenoid Assembly With Aluminum Body) On The Case	1	
30425A	Dual Solenoid, MPZA Lock-Up & Shift (Outside Bell At 1:00) Aluminum Base	1	
30425C	Dual Solenoid, B6VA / BAXA / MAXA / M6HA / MDWA Lock-Up (Outside Bell At 1:00) (Aluminum Base Is 3 1/2” Long)(With 2 Oval Shaped O-Rings)	1	
80425	Dual Solenoid, B6VA / BAXA / MAXA / M6HA / MDWA Lock-Up (Outside Bell At 1:00) (Aluminum Base Is 3 1/2” Long)(With 2 “D” Shaped O-Rings)(Can Use 30425C)	1	
30431A	Solenoid, MPZA 2 Bolt Round (1.690”OD)	1	
30436A	Sensor, MPZA (3 3/4” Wire Harness) 2 Prong Connector (Reads Off # 803)	1	
30436C	Sensor, BAXA / MAXA On Top Of Case (2 Prong Black)	1	
30438A	Sensor, MPZA (7 1/2” Harness) With Square 2 Prong Connector (Reads Off # 690 In Rear Cover)	1	
30438B	Speed Sensor, B6VA / BAXA / MAXA / M6HA In Rear Cover (2 Prong Black Connector) (.780”OD)	1	

PART #	MISC. COMPONENTS	QTY.	REFERENCE #
80485L	Dowel Pin, MPZA Case To Bell	1	
30492A	Drain Plug, MPZA	1	
30493A	Dip Stick, MPZA (12 1/4” Long)	1	
30493B	Dip Stick, B6VA / BAXA / MAXA / M6HA (7 3/8” Long) (3 7/16” Metal Stem)	1	
30494A	Filler Tube, MPZA (7 7/8” Long) (.456” At O-Ring)	1	
30494AB	Fill Plug, MPZA (15mm Head)	1	

PART #	HARD PARTS	QTY.	REFERENCE #
30529A	Converter Reactor, MPZA	1	
30529B	Converter Reactor, B6VA / M6HA / BAXA / MAXA (CASt # P6H) (4.330” Long)	1	
60530C	Pump Gears, B6VA / BAXA / MAXA / M6HA (38 Spline Gear) 28 Teeth (.470” Thick)	1	
80535	Pin, B6VA / BAXA / MAXA / M6HA / MPZA Pump Gear	1	
30550A	Drum, MPZA 3rd-4th (Mainshaft) (2.760” Wide)	1	
30550B	Drum, B6VA / BAXA / MAXA / B6HA 3rd-4th (Mainshaft) (24 Teeth Steels) (2.548” Thick)	1	
30552A	Drum, MPZA Low/2nd Clutch (Secondary Shaft) (5.155”OD Low Clutch Piston)	1	
30552B	Drum, B6VA / MAXA / BAXA 1st/2nd (Secondary Shaft) (4.553”OD 2nd Clutch Piston)	1	
30552F	Drum, M6HA 1st/2nd (Secondary Shaft) (4.400”OD 2nd Clutch Piston)	1	
30574AK	Hub W/Sprag, MPZA Low Clutch (With Sprag & Ball Bearings)	1	
30577A	Hub, MPZA Low Hold Clutch	1	

© Whatever It Takes Transmission Parts. Inc.

PART #	SPRAGS & ONE WAY CLUTCHES	QTY.	REFERENCE #
30654A	Sprag, MPZA Low (26 Elements) (Secondary Shaft)	1	

PART #	HARD PARTS (Continued)	QTY.	REFERENCE #
30672A	Mainshaft, MPZA (15 1/2" Long) (2.870"OD Of Flange)	1	
30672B	Mainshaft, B6VA / M6HA / MAXA / BAXA (14 1/2" Long) (.145" Flange Thickness)	1	
30675A	Secondary Shaft, MPZA (12" Long) Center Flange .190" Thick	1	
30675B	Secondary Shaft, B6VA / BAXA / MAXA (10 1/2" Long) (.284" Thick Flange) 6 Ring Grooves	1	
30676A	Countershaft, MPZA (15 Teeth) (12 1/4" Long) (7 Sets Splines)	1	
30676B	Countershaft, B6VA / BAXA / MAXA (15 Teeth) (11 1/2" Long) 7 Sets Splines	1	
30676F	Countershaft, M6HA (14 Teeth) (11 1/2" Long) 7 Sets Splines	1	
30689A	Plate, MPZA Bell To Secondary Bearing	1	
30689AB	Plate, MPZA Bell To Pinion Bearing	1	
30689B	Plate, B6VA / BAXA / MAXA / M6HA Oil (2.626"OD) Tin	1	
30689BC	Plate, B6VA / BAXA / MAXA / M6HA Oil (Secondary Shaft To Bell Housing) Tin (1.795"OD) (Stamped P6H)	1	
30690A	Park Gear, MPZA (18 Lugs) (4.400"OD)	1	
30690B	Park Gear, B6VA / BAXA / MAXA / M6HA Countershaft (15 Lugs) (4.402"OD)	1	
20699H	Oil Shield, BAXA/MAXA Drive GEar (Mainshaft) (2 Bolt Tin) (3.475"OD) 1999-Up	1	
30710AK	Gear Set, MPZA Transfer (3 Gear Set) 48 Teeth Mainshaft, 45 Teeth Countershaft & 59 Teeth Secondary Shaft	1	
30710BK	Gear Set, B6VA / BAXA / MAXA / M6HA Transfer (3 Gear Set) (45 Teeth Mainshaft, 42 Teeth Countershaft & 59 Teeth Secondary Shaft) (No Oil Shield On Mainshaft Gear)	1	
30710BAK	Gear Set, BAXA / MAXA Transfer (3 Gear Set) 1999-Up (45 Teeth Mainshaft, 42 Teeth Countershaft & 59 Teeth Secondary Shaft) (Uses A 2 Bolt Oil Shield #699 On The Mainshaft Gear)	1	
30715A	Differential Assembly, MPZA (68 Teeth) 10 Bolt (26 Teeth Metal Speed-o)	1	
30715B	Differential Assembly, B6VA / BAXA / MAXA (67 Teeth) No Groove (No Speed-O) (1.100"ID Axle Hole)	1	
30715BA	Differential Assembly, B6VA / BAXA / MAXA (67 Teeth) No Groove (No Speed-O) (1.180"ID Axle Hole)	1	
30715F	Differential Assembly, M6HA (67 Teeth) 1 Groove (23 Teeth Speed-O)	1	
30740A	Valve Body, MPZA (Casting POZ) No Detent Type	1	
30740B	Valve Body, B6VA / M6HA / BAXA / MAXA (Casting P6H)	1	

PART #	VALVE BODY COMPONENTS	QTY.	REFERENCE #
80741-1	Valve & Spring, B6VA / BAXA / MAXA / M6HA (Converter Check Valve) In Valve Body	1	
S30741ADK	Valve With End Plug, BAXA/B6VA/MAXA Clutch Pressure Control (Must Use Reamer # T-F-98892-TL23)(Sonnax)	1	
T-F-98892-TL23	Reamer For S30741ADK	1	
S30741AP-1	Valve, BAXA/B6VAMAXA/M6HA Pressure Regulator (Lube Regulated)(Sonnax)	1	
S30741BPK	Valve Kit, BAXA/B6VA/MAXA/M6HA Pressure Regulator (Oversize)(Contains: Valve, 2 Springs) (Sonnax)(Must Use T-F-98892-TL13)	1	
T-F-98892-TL13	Reamer Kit For S30741BPK (Contains: Reamer, Jig & Guide Pin)(Sonnax)	1	
S30741C-6	End Plug With O-Ring, B6VA/BAXA/MAXA/MDWA/M6HA (14mm Plug)(Fits All 4 Speeds With Dual Linear Solenoids) (Sonnax)	1	98892-02
S30741C-6K	End Plug Kit, B6VA/BAXA/MAXA/MDWA/M6HA (Contains: Three 12mm End Plugs And One 14mm End Plug With O-Rings) (Fits All 4 Speeds With Dual Linear Solenoids)(Sonnax)	1	98892-01K
S30741L-6	End Plug, B6VA/BAXA/MAXA/M6HA (15mm) Lock-Up Control & Shift Valve D (Does Not Use An O-Ring)(Also Fits BAYA/BYBA/B7TA/B7VA/B7WA/B7XA/B7ZA/MFYA/MGHA/MGSA/M7WA) (Fits All 4 Speeds With Dual Linear Solenoids)(Sonnax)	1	
S30741S-6	End Plug With O-Ring, B6VA/BAXA/MAXA/MDWA/M6HA (12mm Plug)(Fits All 4 Speeds With Dual Linear Solenoids) (Soonax)	1	98892-01
30747B	Seperator Plate, B6VA / BAXA / MAXA Valve Body (13 Holes In Pistol Grip Area)	1	
30747D	Seperator Plate, BAXA/MAXA Valve Body (15 Holes In Pistol Grip Area)	1	
30747F	Seperator Plate, M6HA Valve Body (7 Holes In Pistol Grip Area)	1	

PART #	HARD PARTS (Continued)	QTY.	REFERENCE #
30750A	Bell Housing, MPZA (4 3/4" Top Bolts) With Speed-O Hole (18 Bolts To Case)	1	
30750B	Bell Housing, B6VA / BAXA / MAXA (5 1/2" Top Bolts)(Cast # PAX2 Or No Cast #)(No Speed-O Hole)(16 Bolts To Case) 1998-00	1	
30750BB	Bell Housing, B6VA/BAXA/MAXA (5 1/2" Top Bolts)(Cast # PAX2 Or No Cast #)(No Speed-O Hole)(16 Bolts To Case) 2001-02	1	
30750F	Bell Housing, M6HA (5 1/2" Top Bolts) With Speed-O Hole (16 Bolts To Case) Cast # P6H	1	

© Whatever It Takes Transmission Parts. Inc.

PART #	HARD PARTS (Continued)	QTY.	REFERENCE #
30756A	Solenoid Body, MPZA (4 Bolt) With Adjustable Bolt & Nut	1	
30756B	Use 30423BK	1	
30759A	Rear Cover, MPZA (16 Bolts) (Cast # POZ)	1	
30759B	Rear Cover, B6VA (Uses 1 Push In & 1 Screw In Sensor) Has No # 410 Switch	1	
30759C	Rear Cover, BAXA (Uses 1 Push In & 1 Screw In Sensor) Uses A 2 Bolt # 410 Switch (Has 2 Large Ports In Rear Cover Gasket Going To The Case Vent) Cast # 758 & 803	1	
30759CA	Rear Cover, BAXA / MAXA (Uses 1 Push-In & 1 Screw In Sensor)(Uses A 2 Bolt #410 Switch) (Has 1 Large Port In Rear Cover Gasket Going To The Case Vent)(Cast # PAXT Or 443)	1	
30759F	Rear Cover, M6HA (Uses 1 Push In Sensor) Uses A 2 Bolt # 410 Switch	1	
30760A	Case, MPZA 18 Bolts To Bell (16 Bolt Rear Cover)	1	
30760B	Case, B6VA/BAXA/M6HA (16 Bolts To Bell) (Has 2 Large Port In Rear Cover Gasket Going To Case Vent)(2.590”OD Axle Seal)(Also Fits BAXA 1998-99 Only)(These Cases Are Sleeved)	1	
30760BA	Case, B6VA/BAXA/M6HA/MAXA (16 Bolts To Bell) (Has 1 Large Port In Rear Cover Gasket Going To The Case Vent) 2000 Only (These Cases Are Sleeved)	1	
30760BB	Case, B6VA/BAXA/M6HA/MAXA (16 Bolts To Bell)(Has 1 Large Port In Rear Cover Gasket Going To The Case Vent) 2001-02 (These Cases Are Sleeved)	1	
30760BC	Case, M6HA (16 Bolts To Bell) (Has 2 Large Ports In Rear Cover Gasket Going To The Case Vent)(2.200”OD Axle Seal) 1998-99 (These Cases Are Sleeved)	1	
30760F	Case, MGHA (Some) (16 Bolts To Bell)(Has 2 Large Ports In Rear Cover Gasket Going To The Case Vent)(2.195”OD Axle Seal)	1	
30774A	Speed-O Housing & Power Steering Pump, MPZA 3 Prong Connector (21 Teeth) 2 Groove (Metal Gear)	1	
30776AK	Bolt Set, MPZA Case To Bell (18 Pieces) (15mm)	1	
30776BK	Bolt Set, B6VA / BAXA / MAXA / M6HA Case To Bell (19 Pieces) (15mm)	1	
30780AK	Bolt Set, MPZA Rear Cover (16 Pieces)	1	
30780BK	Bolt Set, BAXA / MAXA / B6VA / M6HA Rear Cover (14 Pieces)	1	
30782K	Bolt Set, MPZA Valve Body To Bell (4 Bolts)	1	
80782K	Bolt Set, B6VA / BAXA / MAXA / M6HA Valve Body To Bell (4 Bolts)	1	
30783AAK	Bolt Set, MPZA Accumulator (14 Pieces)	1	
30783AK	Bolt Set, MPZA Accumulator Body (7 Pieces)	1	
30783BK	Bolt Set, B6VA / M4HA / BAXA / MAXA Accumulator (6 Pieces) (10mm)	1	
30784AK	Bolt Set, MPZA Regulator (8 Pieces)	1	
30784BK	Bolt Set, B6VA / M6HA / BAXA / MAXA Regulator (8 Pieces) (10mm)	1	
80795	Nut, B6VA / BAXA / MAXA / M6HA (Some) Mainshaft (Left Hand Thread) .435” Thick	1	
20795A	Nut, BAXA / B6VA / MAXA / M6HA (Countershaft & Secondary Shaft) Right Hand Threads	2	
20796A	Nut, BAXA / B6VA / MAXA / M6HA (Some) Mainshaft (Left Hand Thread) (.713” Thick)	1	
30801A	Gear, MPZA Low (Countershaft) 57 Teeth (5.714”OD)	1	
30801B	Gear, B6VA / BAXA / MAXA / M6HA 1st (Countershaft) (54 Teeth)	1	
30802A	Gear, MPZA Low (Secondary Shaft) With Inner Sprag Race	1	
30802AK	Low Assembly, MPZA With Sprag Hub, Gear & Shim	1	
30802B	Gear, B6VA / M6HA / BAXA / MAXA 1st (Secondary) 28 Teeth (2.580” Tall)	1	
30803A	Gear, MPZA 2nd (Secondary Shaft) 47 Teeth	1	
30803B	Gear, B6VA / M6HA / MAXA / BAXA 2nd (Secondary Shaft) 45 Teeth (Left Angle)	1	
30804A	Gear, MPZA 2nd (Countershaft) 54 Teeth (4.724”OD)	1	
30804B	Gear, B6VA / BAXA / MAXA / M6HA 2nd (Countershaft) 49 Teeth (4.333”OD)	1	
30806A	Gear, MPZA 3rd (43 Teeth) (3.805”OD)	1	
30806B	Gear, B6VA / BAXA / MAXA 3rd (Mainshaft) 44 Teeth (No Groove) (2.400”ID)	1	
30806F	Gear, M6HA (43 Teeth) 1 Groove (2.400”ID)	1	
30807A	Gear, MPZA 3rd (Countershaft) 44 Teeth (3.900”OD)	1	
30807B	Gear, B6VA / BAXA / MAXA 3rd (Countershaft) 41 Teeth (No Groove) Right Angle	1	
30807F	Gear, M6HA 3rd (Countershaft) 42 Teeth (1 Groove) Right Angle	1	
30809A	Gear, MPZA 4th/Reverse (Mainshaft) 46 Teeth Big (26 Teeth Small)	1	
30809B	Gear, B6VA / BAXA / MAXA (50 Teeth) No Groove (Left Angle)	1	
30809F	Gear, M6HA (49 Teeth) 1 Groove (Left Angle)	1	
30810A	Gear, MPZA 4th (Countershaft) 30 Teeth (No Groove) (1.615”ID)	1	
30810A	Gear, MPZA 4th (Countershaft) 30 Teeth (3.140”OD)	1	
30810B	Gear, B6VA / BAXA / MAXA 4th (Countershaft) 31 Teeth (1.575”ID)	1	
30810F	Gear, M6HA 4th (Countershaft) 32 Teeth (1 Groove)	1	
30816A	Gear, MPZA Reverse (Countershaft) 48 Teeth (1.810”ID) Angled Teeth	1	
30816B	Gear, B6VA / BAXA / MAXA / M6HA Reverse (Countershaft) 41 Teeth (1.810”ID)	1	
30818A	Gear, MPZA Reverse Idler (29 Teeth) (2.910”OD)	1	
30818B	Gear, B6VA / BAXA / MAXA / M6HA Reverse Idler (27 Teeth) (.787”ID)	1	
30819A	Pin, MPZA Reverse Idler (2.950” Long)	1	
80819A	Pin, B6VA / BAXA / MAXA / M6HA Reverse Idler (1.705” Long) (.590”OD) With 2 O-Ring Grooves	1	
30820A	Bracket, MPZA Reverse Idler (Cast # POZZ)	1	

© Whatever It Takes Transmission Parts. Inc.

30820B ..... Retainer, BAXA / B6VA / MAXA / M6HA Reverse Idler (Aluminum, 2 Bolt)(2.170" Long)(1.220"OD) (.582"ID) 1
80830 ..... Selector, B6VA / BAXA / MAXA / M6HA Reverse (Countershaft) 1
30830A ..... Selector, MPZA Reverse (Countershaft) (.584" Thick) 1
30835A ..... Hub, MPZA Selector (.340" Thick) 1
30835B ..... Hub, B6VA / BAXA / MAXA / M6HA (26 Teeth) 30 Splines (.473" Thick) 1
30840A ..... Fork, MPZA Reverse (Cast # POZ) 1
30840B ..... Fork, B6VA / BAXA (Cast # PAX) 1
30840C ..... Fork, MAXA / M6HA (Cast # P6H) 1
80850 ..... Cushion, MPZA 1st, 2nd, 3rd, 4th & 1st Hold Clutch 1-5
30850B ..... Cushion, B6VA / BAXA / MAXA / M6HA 4th (Mainshaft) (.060" Thick) (4.450"OD) Also Fits 3rd Clutch 1-2
30853A ..... Cushion, MPZA Low Clutch (4.570"OD) (.070" Thick) 1
30857B ..... Waved Ring, B6VA / M6HA / BAXA / MAXA 1st Clutch (4 3/8"OD) (.082" Thick) 1
80861 ..... Snap Ring, B6VA / BAXA / MAXA / MPZA / M6HA Holds Pressure Plate In All Drums 1-4
30861A ..... Snap Ring, MPZA Low Clutch Top (.069" Thick) (5 9/16"OD) 1
90861E ..... Snap Ring, B6VA/BAXA/MAXA/M6HA Holds 1st/2nd/3rd/4th Clutch Pressure Plate In Drum (4.688"OD) 1
80862 ..... Snap Ring, B6VA / BAXA / MAXA / MPZA / M6HA Holds 1st, 2nd, 3rd, 4th & 1st Hold Clutch Retainer In 1-5
30862A ..... Snap Ring, MPZA 2nd Clutch Retainer (.070" Thick) (1.938"OD) 1
80870 ..... Snap Ring, B6VA / BAXA / MAXA / M6HA Holds Bearing In Stator (Front) 1
30873B ..... Snap Ring, B6VA / BAXA / MAXA / MPZA / M6HA Holds Pressure Plate In 2nd Clutch Drum (Use 80861) 1
30877A ..... Snap Ring, MPZA / B6VA / BAXA / MAXA Holds 1st Clutch Retainer In (.058" Thick)(1.925"OD) (Also Fits BYFA/B36A/MDKA/MDPA/MDRA/P36A 5th Clutch #865 & 4th Clutch #862 & Low Clutch #877) 1
80879 ..... Snap Ring, MPZA Holds Caged Needle Bearing # 214 To Mainshaft 1
60879C ..... Snap Ring, B6VA / BAXA / MAXA / M6HA Holds Caged Needle Bearing # 214 To Mainshaft 1
30880A ..... Snap Ring, MPZA Mainshaft To Case (3.270"OD) 1
30880B ..... Snap Ring, M6HA / BAXA / MAXA / B6VA Ball Bearing To Case (Mainshaft) (.077" Thick) (2.510"OD) 1
80881 ..... Wire Snap Ring, MPZA Mainshaft 1
60884CA ..... Snap Ring, B6VA / BAXA / MAXA / MPZA / M6HA Countershaft Ball Bearing To Case (Also Secondary Shaft Ball Bearing To Case) 1-2
30886A ..... Snap Ring, MPZA Holds Collar To Countershaft (.040" Thick) 1
30887A ..... Horseshoe Clips, MPZA (.074" Thick) (2 Per Set) 1
30887B ..... Horse Shoe Clips, B6VA / BAXA / MAXA / M6HA Pinion Shaft (1.600" Long) (.187" Wide) (.078" Thick) (2 Per Set) 1
30887BB ..... Horse Shoe Clips, B6VA / BAXA / MAXA / M6HA Secondary Shaft (1.640" Long) (.078" Thick) (2 Per Set) 1
30888A ..... Snap Ring, MPZA / B6VA / BAXA / MAXA / M6HA 2nd Shift (.058" Thick) 1
30889B ..... Snap Ring, MAXA/BAXA/M6HA/B6VA Countershaft Ball Bearing To Case (Use 60884CA) 1
30889A ..... Snap Ring, MPZA Secondary Shaft Ball Bearing To Case (3 3/8"OD) (.078" Thick) 1
30890B ..... Snap Ring, B6VA / BAXA / MAXA / M6HA Holds Countershaft Ball Bearing To Case (Use 60884CA) 1
30900A ..... Servo Assembly, MPZA (Cast # POZ) 14 Bolt (3 Bores) 1
30900B ..... Servo Assembly, B6VA / M6HA / BAXA / MAXA (Cast # P6H) 1
30900B-2 ..... Detent Assembly, B6VA / M6HA / BAXA / MAXA (Servo) Bolts To Servo With 2 Detents For Servo Rod (Steel) 1
30924A ..... Regulator Body, MPZA (Casting POZ & POZZ) 8 Bolt (Without Seperator Plate) 1
30924B ..... Regulator, B6VA / M6HA / BAXA / MAXA (Casting P6H)(Without Seperator Plate)(Holes For The Oil Tubes Are Drilled) 1
30924C ..... Regulator Body, B6VA/M6HA/BAXA/MAXA (Cast # P6H)(Without Seperator Plate)(Holes For The Oil Tubes Are Not Drilled Out) 1
30925A ..... Accumulator, MPZA (POZ Casting) 7 Bolt (2 Bores) 1
30925B ..... Accumulator, B6VA / MAXA / BAXA (PAX Casting) 1
30925F ..... Accumulator, M6HA (P6H Casting) 1
80960 ..... Piston, MPZA 1st, 3rd, 4th & 1st Hold Clutch 1-4
30960B ..... Piston, M6VA / BAXA / MAXA / M6HA 4th Mainshaft (4.705"OD) (.338" Thick At Edge) 1
30962A ..... Piston, MPZA 2nd Clutch (.338" Thick) 1
30962B ..... Piston, B6VA / MAXA / BAXA 2nd Clutch (4.553"OD) (.610 Thick) 1
30962F ..... Piston, M6HA 2nd Clutch (4.400"OD) (.605" Thick) 1
30967A ..... Piston, MPZA Inner (.445" Thick) (4.560"OD) 1
30967B ..... Piston, B6VA / M6HA / BAXA / MAXA 1st Clutch (4.553"OD) (.590" Thick) 1
30969A ..... Piston, MPZA Low Clutch (1.070" Thick) (5.155"OD) 1
80970 ..... Spring, B6VA / BAXA / MAXA / MPZA / M6HA 1st, 2nd, 3rd & 4th Clutch Return 1-4
30972B ..... Spring, B6VA / M6HA / MAXA / BAXA 1st Clutch Return (2.600"OD) (1.775" Thick) 1
30974A ..... Spring, MPZA Low Return (2.965"OD) (1.545" Tall) 1
80980 ..... Retainer, MPZA 3rd, 4th Clutch (Mainshaft) 1-2

© Whatever It Takes Transmission Parts. Inc.

PART #	HARD PARTS (Continued)	QTY.	REFERENCE #
30982B	Retainer/Piston, BAXA / B6VA / MAXA 1st & 2nd Clutch (Bonded) (3.940"OD)(1.060" Thick)	1	
30982BK	Retainer/Piston Kit, BAXA / B6VA 1st & 2nd Clutch (Inner Bonded)(3.940"OD)(1.060" Thick) (Contains Both Bonded Retainer/Pistons)	1	
30982D	Retainer, MAXA / M6HA 1st & 2nd Clutch (Inner Steel) (3.915"OD)	1	
30982F	Retainer, M6HA 2nd Clutch (Inner Steel) (3.754"OD)	1	
30984A	Retainer, MPZA Low Clutch (2.910"OD)	1	
30991-4B	Shift Rod, B6VA (11 1/8" Long)	1	
30991-4C	Shift Rod, BAXA / MAXA / M6HA (12 5/16" Long)	1	
30991A	Shift Rod, MPZA (12 7/8" Long) POX Casting	1	
30995A	Park Pawl Assembly, MPZA	1	
30995B	Park Pawl Assembly, BAXA / MAXA / M6HA / B6VA (7 Pieces)	1	
80995-6A	Park Lock Assembly, MPZA Aluminum Fork, Springs, 2 Pins	1	
30995B-6A	Park Lock Assembly, BAXA / MAXA / M6HA Aluminum Fork, Springs, 2 Pins	1	
80996	Fitting, MPZA Cooler Line (1 1/2" Long) Holds Cooler Line To Bell	1-2	
80996A	Fitting, MPZA Cooler Line (4 5/8" Long)	1	
30998A	Cooler Line, MPZA (Bolts To Bell) 9" Tube With 2 Brackets (Fitting Holds Tube To Bell)	1-2	
30998B	External Cooler Adapter, Acura/Honda (Use To Replace The OEM)	1	
30999A	Tube Set, MPZA (8 Pieces)	1	
30999B	Tube Set, BAXA / MAXA / B6VA / M6HA (3 Pieces)	1	
30999BA	Tube Set, BAXA / MAXA (5 Pieces) 1999-Up	1	

© Whatever It Takes Transmission Parts. Inc.

© Whatever It Takes Transmission Parts. Inc.

B7TA / B7VA / B7XA / B7YA / M7ZA

FWD 4 Speed

000 P&R Kit

002 OHK Kit

004 Master L/Steels Kit

006 Master W/Steels Kit

119 Friction Module

139 Steel Module

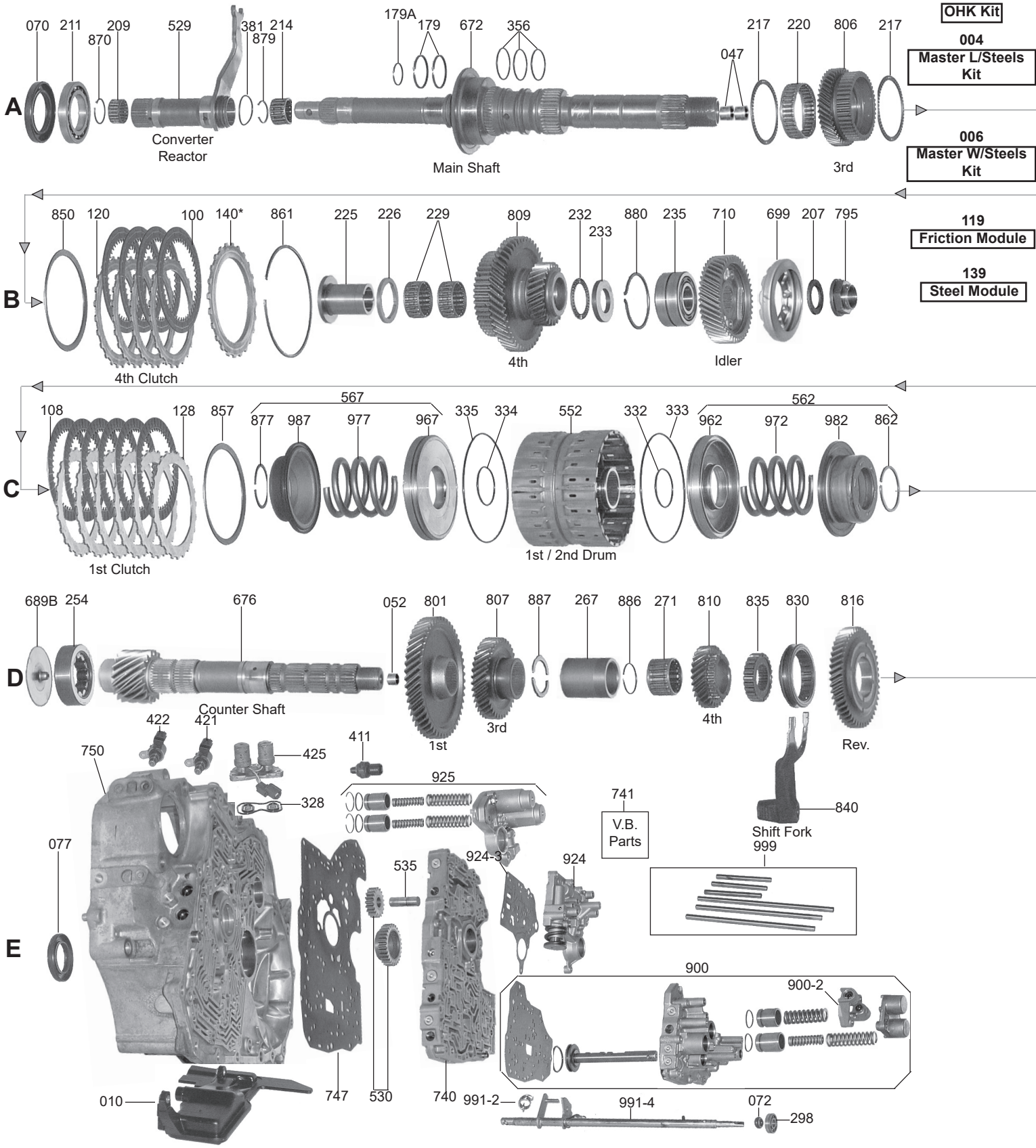

© Whatever It Takes Transmission Parts. Inc.

B7TA / B7VA / B7XA / B7YA / M7ZA

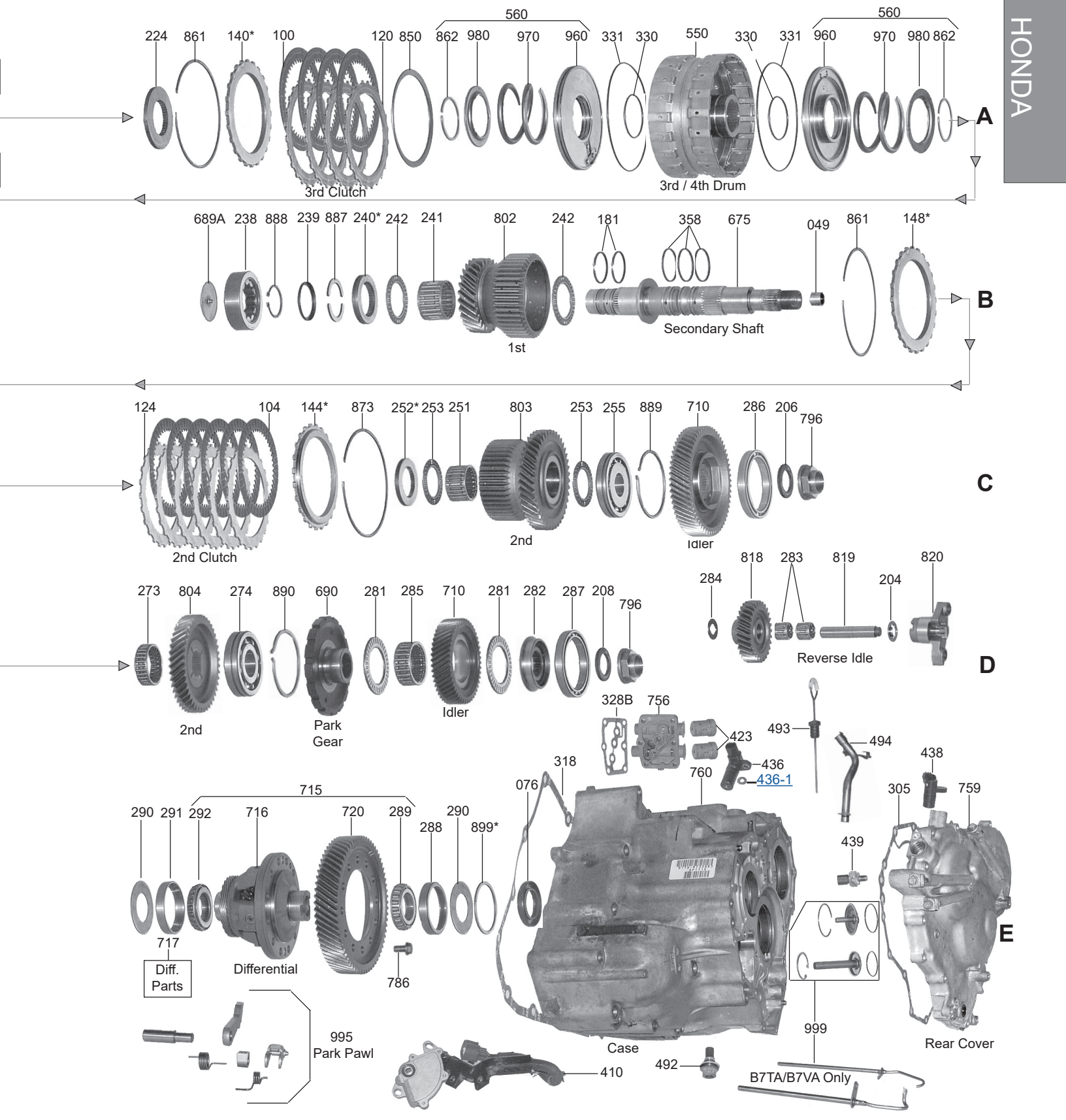

1-800-940-0197

© Whatever It Takes Transmission Parts. Inc.

000 P&R Kit

002 OHK Kit

004 Master L/Steels Kit

006 Master W/Steels Kit

119 Friction Module

139 Steel Module

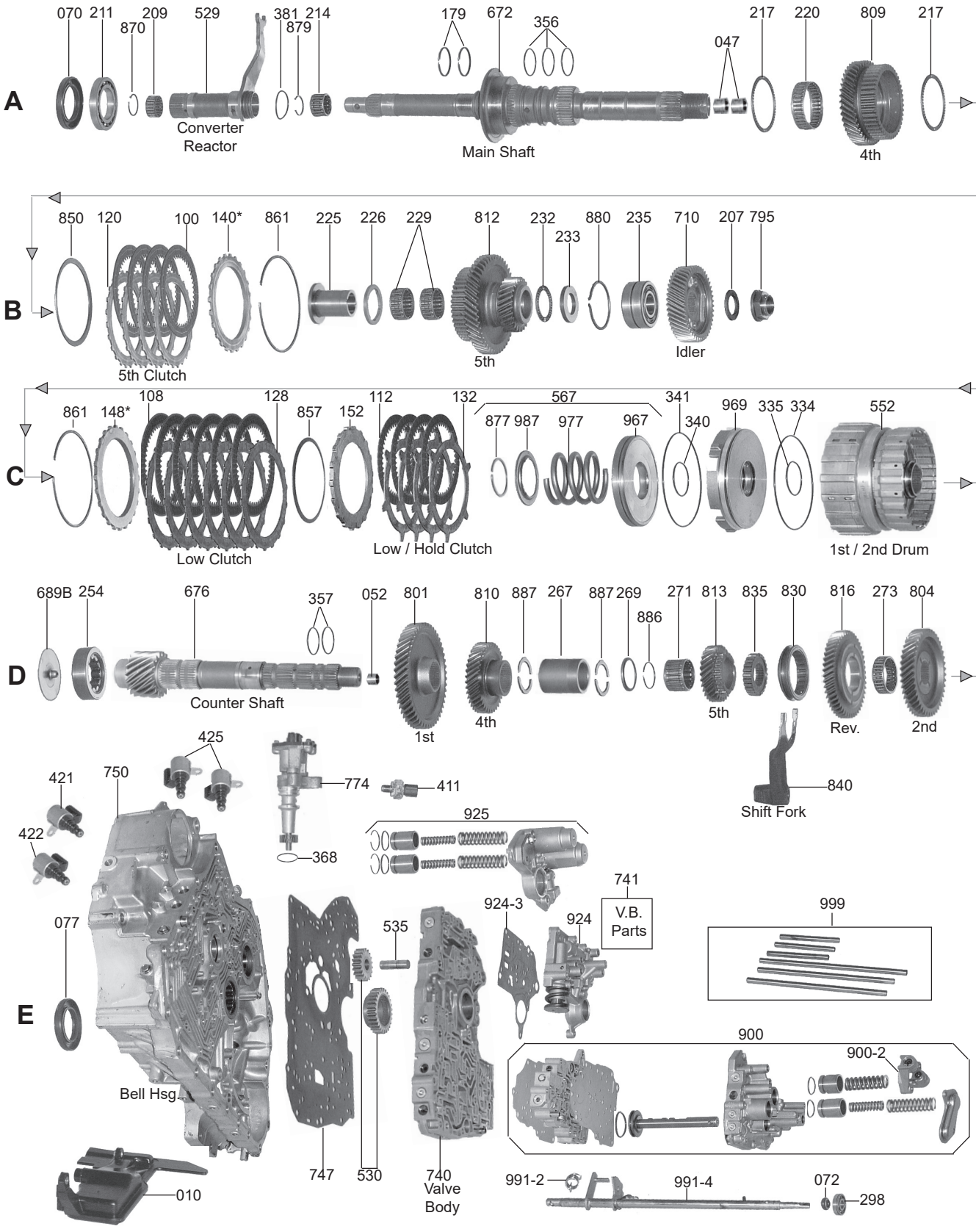

© Whatever It Takes Transmission Parts. Inc.

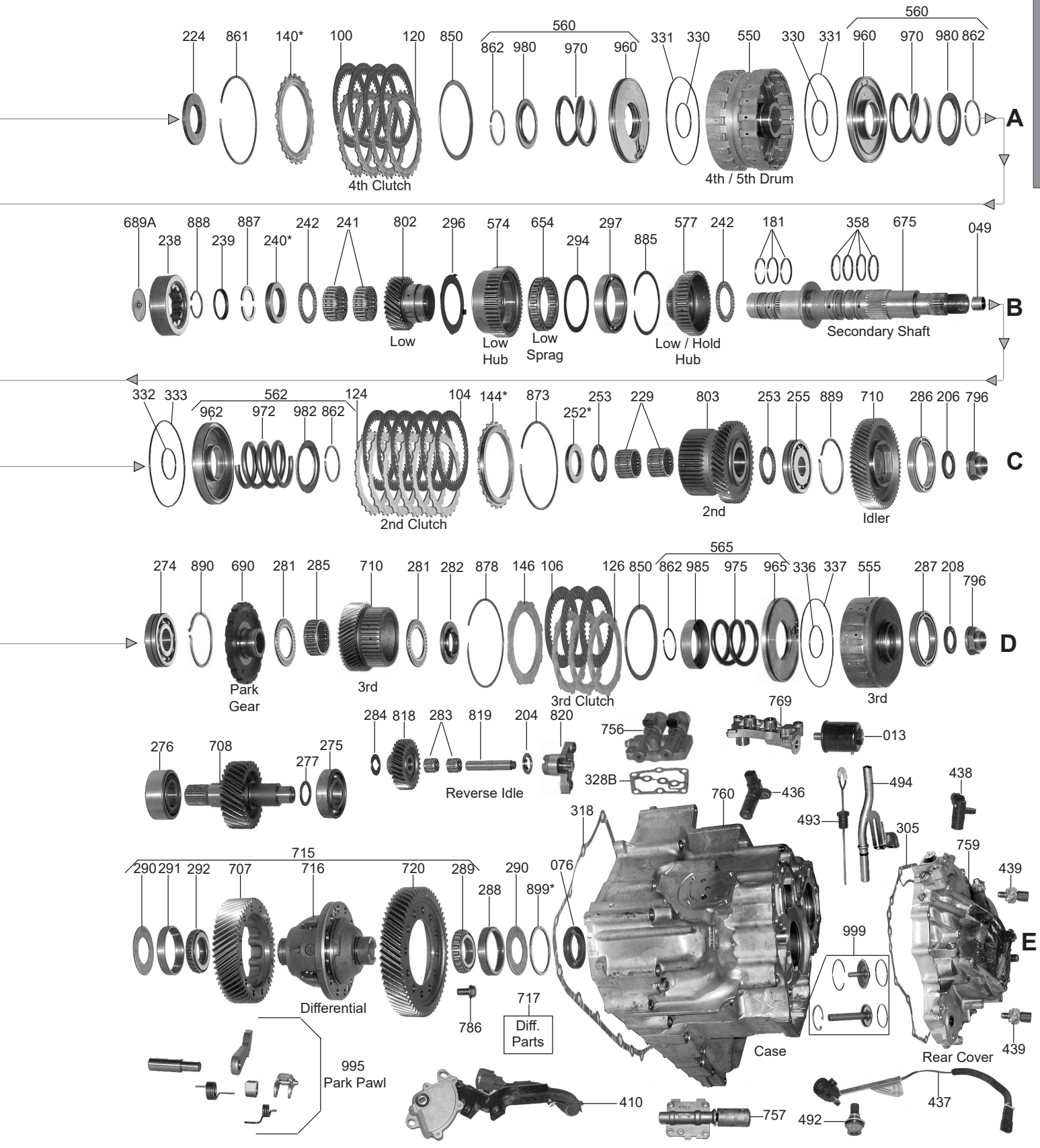

1-800-940-0197

© Whatever It Takes Transmission Parts. Inc.

PART #	PAPER & RUBBER KIT	QTY.	REFERENCE #
20000B	Paper & Rubber Kit, BAYA / B7WA / BDGA-6 / BDGA-7 / BDGA-8 / BGFA / M7WA / MGFA (3.2 TL 2000-04)(3.2 CL 2001-03)(Accord V6 2003-04)	1	
20000C	Paper & Rubber Kit, M7ZA / B7VA / B7XA / B7YA / B7TA 1998-Up	1	
20000E	Paper & Rubber Kit, BYBA / BVGA-5 / BVGA-6 / BVGA-7 / MGHA / BGHA 5 Speed (Acura MDX 2001-02)(Odyssey 2002-04) (Pilot 2003-07)	1	
20001V	Sub Kit, BGHA/MGHA/PVGA Transfer Case Parts 2001-Up (Also Fits BBTA/BDKA/BJFA/BK4A/ BVLA/BWEA/MDKA/MDRA/MJBA/MJFA/MYFA/PSFA/PVLA/P34A/P35A)	1	

PART #	OVERHAUL KITS	QTY.	REFERENCE #
20002B	Overhaul Kit, BAYA / BDGA-6 / BDGA-7 / BDGA-8 / BGFA / B7WA / MAYA / MGFA / M7WA 2000-06	1	
20002C	Overhaul Kit, M7ZA / B7VA / B7XA / B7YA / B7TA / B7ZA 1995-02 (For Bonded Pistons Sell Two Of The 20982H)(All Others Use 2 Of The 30982B)	1	
20002E	Overhaul Kit, BYBA(Odyssey 2002-04) / BGRA(Odyssey 2005-06) BVGA-5/BVGA-6/BVGA-7 (Pilot 2003-05)/ BGHA/MGHA(MDX 2001-02)	1	
20002U	Overhaul Kit, MURA (Accord, Hybrid 3.0L) 2005-06	1	

PART #	MASTER L/STEEL KIT	QTY.	REFERENCE #
20004B	Master L/Steels KIt, B7WA / BGFA / M7WA / MGFA 2000-06 (Also BAYA/MAYA With 4.727”OD 3rd Clutch Friction)	1	
20004BA	Master L/Steels Kit, BAYA / BDGA-6 / BDGA-7 / BDGA-8 / MAYA 2004-Up (With 4.885”OD 3rd Clutch Friction)	1	
20004C	Master L/Steels Kit, B7XA / B7ZA / M7ZA (Accord V-6 1998-02) (Acura 3.0L 1997-00) (For Bonded Retainer On B7VA Use 2 of the 20982H)(All Others Use 2 Of The 30982B)	1	
20004E	Master L/Steels Kit, BYBA(Odyssey 2002-04)/ BGRA(Odyssey 2005-06) BVGA-5/BVGA-6/ BVGA-7 (Pilot 2003-05) / BGHA/MHGA(MDX 01-02)	1	
20004M	Master L/Steels Kit, B7TA / B7YA / B7VA (Odyssey 1999-01) (Acura 3.2L 1996-99)(For Bonded Pistons Sell Two Of The 20982H)	1	
20004P	Master L/Steels Kit, (BGRA 2005-06) / (BVGA-5/BVGA-6/BVGA-7 2003-05)	1	

PART #	MASTER W/STEEL KIT	QTY.	REFERENCE #
20006B	Master W/Steels Kit, B7WA / BGFA / M7WA / MGFA 2000-06 (Also BAYA/MAYA 2003) (With 4.727”OD 3rd Clutch Frictions)	1	
20006BA	Master W/Steels Kit, BAYA / BDGA-6 / BDGA-7 / BDGA-8 / MAYA 2004-Up (With 4.885”OD 3rd Clutch Friction)	1	
20006C	Master W/Steels Kit, B7XA / B7ZA / M7ZA (Accord V-6 1998-02) (Acura 3.0L 1997-00)	1	
20006E	Master W/Steels Kit, BYBA(Odyssey 2002-04) / BGRA(Odyssey 2005-06) BVGA-5/BVGA-6/ BVGA-7(Pilot 2003-05) / BGHA/MGHA(MDX 01-02)	1	
20006M	Master W/Steels Kit, B7TA / B7YA / B7VA (Odyssey 1999-01) (Acura 3.2L 1996-99)(For Bonded Pistons Sell Two Of The 20982H)	1	
20006P	Master W/Steels Kit, BVGA-5/BVGA-6 2003-04	1	
20006PA	Master W/Steels KIt, (BGRA 2005-06) / (BVGA-7 2005)	1	

PART #	FILTER	QTY.	REFERENCE #
20010B	Filter, BAYA/BDGA-6/BDGA-7/BDGA-8/BGFA/BYBA/B7WA/MFYA/MGFA/MGSA/M7WA 2000-Up	1	
20010C	Filter, B7VA/B7XA/B7YA/B7ZA/M7ZA/B7TA (Some)(Plastic) 1996-Up (With 2 One Bolt Mounting Brackets)	1	
20010D	Filter, BAYA/BYBA/B7WA/MFYA/MGSA/M7W (Plastic) 2000-Up	1	
20010E	Filter, BAYA.BGFA/BGHA/BVGA-5/BVGA-6/BVGA-7/BYBA/B7WA/MFYA/MGFA/MGHA/MGSA/ M7WA (Screw In)		

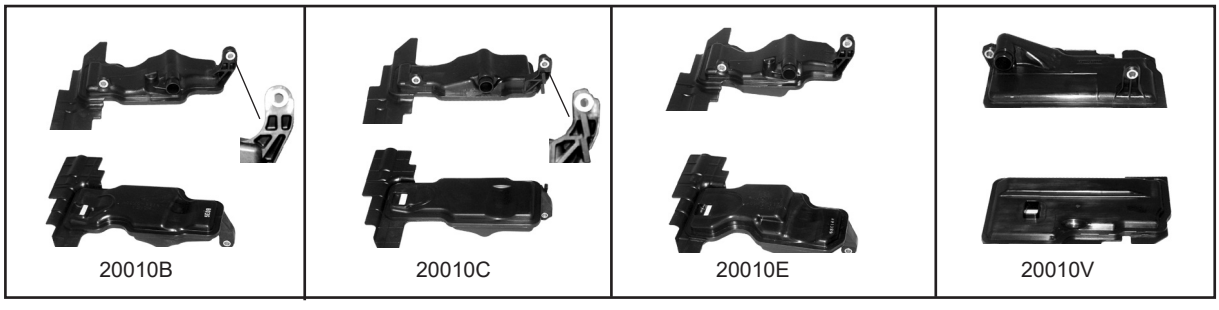

20010B 20010C 20010E 20010V

© Whatever It Takes Transmission Parts. Inc.

PART #	MISC. FILTERS	QTY.	REFERENCE #
140013A	Filter, MDKA/BYFA/MJBA (Cartridge Type) 1996-Up	1	
20013E	Filter, BAYA/BGFA/BGHA/BVGA-5/BVGA-6/BVGA-7/BYBA/B7WA/MFYA/MGFA/MGHA/MGSA/ M7WA (Screw In)	1	
20013EA	Filter, BAYA/BGRA/BYBA/BVGA-5/BVGA-6/BVGA-7 (Cartridge Type) (Under A 3 Bolt Cover)	1	
70018C	Screen, B7TA / B7VA / B7XA / B7YA / M7ZA / MGHA / BAYA / BGHA / BVGA-5/ BVGA-6 / BVGA-7 / BYBA / MAYA (Some) (In Valve Body) (.570”OD) (.125” Thick Rubber Boot)	1	
70018CA	Screen, B7TA / B7VA / B7XA / B7YA / M7ZA / MGHA / BAYA / BGHA / BVGA -5 / BVGA-6 / BVGA-7 / BYBA / MAYA (Some) (In Valve Body) (.662”OD) (.315” Thick Rubber Boot)	1	

PART #	BUSHINGS	QTY.	REFERENCE #
20030A	Use 30030A & 60030A	1	
30030A	Bushing Kit, B6VA/BAXA/M6HA/M7ZA/MPWA (Vigor)/MPZA (3 Pieces)(Also Fits Honda 20 Series)	1	
60030A	Bushing Kit, AK/AS/F4/K4/CA/L4/P1G4/L5 (Also Fits Honda 20 Series)	1	
20030B	Bushing Kit, BYBA/B7TA/BAYA/M7WA (4 Pieces)	1	
20030Q	Bushing Kit, M7WA/B7WA/BDGA-6/BDGA-7/BDGA-8/BYBA/BGRA.PGRA/BAYA/MAYA/BGHA/ MGHA/BGFA/MGFA/BVGA-5/BVGA-6/BVGA-7/PVGA (4 Pieces)	1	
T-28999	Tool Set, Acura/Honda(22 Pcs Bushing Remover & Installer) (This Set Works For All Honda’s W/Bushings)	1	

PART #	METAL CLAD SEALS	QTY.	REFERENCE #
70070B	Seal, MDRA Converter (46x70x8mm)	1	
60070H	Seal, BAYA/BDGA-6/BDGA-7/BDGA-8/BGFA/BGHA/BVGA-5/BVGA-6/BVGA-7/BYBA/B7TA/ B7VA/B7WA/B7XA/B7YA/B7ZA/MGFA/MGHA/M7WA/M7ZA Converter (44X68X8mm) Clockwise Helix	1	
60072	Seal, B7TA / B7VA / B7XA / B7YA / M7ZA / MGHA Manual Shaft	1	
30076A	Seal, BAYA/BGFA/BVGA-5/BVGA-6/BVGA-7/BYBA/B7TA/B7VA/B7WA/B7XA/B7ZA/MFYA/ MGFA/MGHA/MGSA/M7WA/M7ZA Axle (Case Side) (35x54x8mm)	1	
60077H	Seal, BAYA/BGFA/BVGA-5/BVGA-6/BVGA-7/BYBA/B7TA/B7VA/B7WA/B7XA/B7ZA/MFYA/ MFGA/MGHA/MGSA/M7WA/M7ZA Axle (Bell Housing) (40 x 56 x 9mm)	1	37988

PART #	FRICTION CLUTCH	QTY.	REFERENCE #
80100A	Friction, B7XA/B7ZA/M7ZA 1st/2nd/3rd/4th Clutch (.076”)(Also MPZA 2nd/3rd/4th Clutch) (Also B6VA/BAXA/MAXA/MDWA 3rd/4th Clutch)(Also MFYA/MGSA 4th/5th Clutch)(Also BAYA/ BGFA/BGRA/BVGA-5/BVGA-6/BVGA-7/BYBA/B7WA/MFYA/MGFA/MGHA/MGSA/M7WA Low Hold Clutch #112)	4-20	
20100E	Friction, BAYA/BYBA/B7WA/MGHA/M7WA 4th & 5th Clutch (.076”) 44 Teeth (Also B7TA/B7VA/B7YA 3rd & 4th Clutch)	4-8	
20104A	Friction, BAYA/BGFA/BGHA/BVGA-5/BVGA-6/BVGA-7/BYBA/B7WA/MGFA/MGHA/MGSA/ M7WA 2nd Clutch (.076”)(30 Teeth)(5.004”OD)(High Energy)	6	
20104E	Friction, BAYA/BGFA/BGHA/BVGA-5/BVGA-6/BVGA-7/BYBA/B7WA/MGFA/MGHA/MGSA/ M7WA 2nd Clutch (.076”)(30 Teeth)(5.004”OD)(High Energy)	6	
20104H	Friction, B7TA/B7VA/B7YA 1st & 2nd Clutch (.076”) 44 Teeth (4.830”OD)(Also Fits BVGA-5/ BVGA-6/BVGA-7 4th/5th Clutch #100)(Also Fits BCLA 3rd/4th Clutch #100)	6-12	
20104Q	Friction, MGSA/M7WA 2nd Clutch (.076”) 30 Teeth (5.015”OD) Turtle Shell (Use 20104E)	6	
20104X	Friction, MFYA 2nd Clutch (.076”) 30 Teeth (5.045”OD) Turtle Shell (May Be The Same As 20104E)	6	
20106B	Friction, BDGA-6/BDGA-7/BDGA-8/BGFA/B7WA/MFYA/MGFA/MGSA/M7WA 3rd Clutch (.076”) 42 Teeth (4.727”OD) 2000-Up (BAYA/MAYA 2003)	3-6	
20106E	Friction, BGHA/BVGA-5/BVGA-6/BVGA-7/BYBA/MGHA 3rd Clutch (.076”) 42 Teeth (4.885”OD) 2000-Up (BAYA/MAYA 2004-Up)	3-6	
20108A	Friction, B7ZA / B7XA Low Clutch (.076”) 44 Teeth (Use 80100A)	6	
20108E	Friction, BAYA/BGFA/BGHA/BGVA/BVGA-5/BVGA-6/BVGA-7/BYBA/B7WA/MFYA/MGFA/ MGHA/MGSA/M7WA Low Clutch (.076”) (49 Teeth) (High Energy) (Also Fits MPZA 1st Clutch)	5	
20108H	Friction, B7VA Low Clutch (.076”) 44 Teeth (Use 20104H)	6	
20108V	Friction, BVGA-5/BVGA-6/BVGA-7 Low Clutch (.078”)(48 Teeth)(5.190”OD) 2003-Up (Also Fits BJFA/MJBA/MJFA/MURA Low CLutch 2005-08)	6	
20112E	Friction, BAYA/BYBA/B7WA/MFYA/MGHA/MGSA/M7WA Low/Hold Clutch (.076”) 44 Teeth (4.715”OD) (Use 80100A)	4	
80119	Friction Module, B7XA / M7ZA 1997-02	1	
20119B	Friction Module, BGFA/B7WA/MGFA/M7WA 2000-Up (BAYA/MAYA 2003 With 4.727”OD 3rd Clutch Friction)	1	
20119E	Friction Module, BDGA-6/BDGA-7/BDGA-8/BGHA/BYBA/MGHA/BAYA/MAYA (BAYA/MAYA 2005-07 With 4.885”OD 3rd Clu Frictions) (BDGA 2004-06)(BYBA 2002-04)(BGHA 2002) (MGHA 2001)	1	

© Whatever It Takes Transmission Parts. Inc.

PART #	FRICTION CLUTCH (Continued)	QTY.	REFERENCE #
20119M	Friction Module, B7TA / B7YA / B7VA 1996-01	1	
80119S1	Friction Module, B7XA/M7ZA 1997-02 (Stage 1)	1	
20119P	Friction Module, BGRA/BVGA-5/BVGA-6/BVGA-7/BVLA 2003-06	1	

PART #	STEEL CLUTCH	QTY.	REFERENCE #
80120A	Steel, B7XA/B7ZA 3rd Clutch (.091") 24 Teeth (3.700"ID) (Also Fits MFYA/MGSA 4th Clutch)	4	
20120E	Steel, BAYA/BDGA-6/BDGA-7/BDGA-8/BGFA/BYBA/B7WA/MGFA/MGHA/M7WA 4th Clutch (.090") 20 Teeth (3.675"ID) (Also Fits B7TA/B7VA/B7YA 3rd Clutch)	4-8	
20120EC	Steel, MGHA 5th Clutch (.079") 20 Teeth (Use 70128B)	4	
20120F	Steel, B7XA / B7ZA 4th Clutch (.079") 24 Teeth (Use 80128A)	4	
20120H	Steel, B7TA/B7VA/B7YA 4th Clutch (.079")(20 Teeth)(5.255"OD)(3.675"ID) 1999-Up (Also Fits BVGA-5/BVGA-6/BVGA-7 4th Clutch 2003-04)(Also Fits BDGA-6/BDGA-7/BDGA-8 5th Clutch 2004-08)	4	
20120P	Steel, BGRA/BVGA-5/BVGA-6/BVGA-7 4th Clutch (.062)(20 Teeth)(3.675"ID) 2005-Up (OE Steels Have A Notch On Each Tooth, These Are Square And Will Retro Fit)(Also Fits BGRA/BVGA-5/BVGA-6/BVGA-7 5th Clutch)	4	
20124E	Steel, BAYA/BDGA-6/BDGA-7/BDGA-8/BGFA/BVGA-5/BVGA-6/BVGA-7/BYBA/B7WA/MFYA/MGFA/MGHA/MGSA/M7WA 2nd Clutch (.064") 20 Teeth (3.753"ID)	6	
20124F	Steel, B7XA / B7ZA 2nd Clutch (.079") 24 Teeth (Use 80128A)	6	
20126B	Steel, BAYA/BGFA/B7WA/MFYA/MGFA/MGSA/M7WA 3rd Clutch (.091")(24 Teeth)	3	
20126E	Steel, BDGA/BYBA/MGHA 3rd Clutch (.091")(20 Teeth)(3.465"ID)(Also Fits Some BVGA 4th Clutch)	5	
80128A	Steel,B7XA/B7ZA/M7ZA Low Clutch #128 and 2nd Clutch #124 and 4th Clutch #120 (.079") (24 Teeth)(Also Fits MFYA/MGSA 5th Clutch #120)	4-16	
70128B	Steel, BAYA/BYBA/B7TA/B7VA/B7WA/M7WA 4th Clutch #120 (.079")(20 Teeth)(3.756"ID) (Also Fits BAYA/BGFA/BVGA-5/BVGA-6/BVGA-7/BYBA/B7WA/MGFA/MGHA/M7WA 5th Clutch #120)	4-8	
20128E	Steel, BAYA/BDGA-6/BDGA-7/BDGA-8/BGFA/BVGA-5/BVGA-6/BVGA-7/BYBA/B7WA/MFYA/MGFA/MGHA/MGSA/M7WA Low Clutch (24 Teeth) (.062" Thick) (4.070"ID)	6	
20128F	Steel, B7XA / B7ZA 1st Clutch (.079") 24 Teeth (Use 80128A)	6	
20128H	Steel, B7TA/B7VA/B7YA 1st Clutch (.078")(20 Teeth)(3.670"ID)(5.105"OD)(Also Fits B7TA/B7VA/B7YA 2nd Clutch #124)	6	
20132E	Steel, BAYA/BDGA-6/BDGA-7/BDGA-8/BGFA/BVGA-5/BVGA-6/BVGA-7/BYBA/B7WA/MFYA/MGFA/MGHA/MGSA/M7WA Low/Hold (.072" Thick) 6 Teeth (3.675"ID)	4	
20139B	Steel Module, B7WA/BGFA/M7WA/MGFA 2000-Up	1	
20139E	Steel Module, BGHA/BYBA/MGHA 5 Speed (Acura MDX 2001-02)(Odyssey 2002-04) (Pilot 2003-04)	1	

PART #	CLUTCH PRESSURE PLATES	QTY.	REFERENCE #
80140AA	Pressure Plate, B7XA/B7ZA/M7ZA 1st/2nd/3rd/4th Clutch (#1) (.082") 24 Teeth (Also BGFA/BVGA-5/BVGA-6/BVGA-7/MFYA/MGSA 4th/5th Clutch)(Also Fits BAYA/BGFA/B7WA/MFYA/MGFA/MGSA/M7WA 3rd Clutch #146)	1-4	
80140AB	Pressure Plate, B7XA/B7ZA/M7ZA 1st/2nd/3rd/4th Clutch (#2) (.086") 24 Teeth (Also BGFA/BVGA-5/BVGA-6/BVGA-7/MFYA/MGSA 4th/5th Clutch)(Also Fits BAYA/BGFA/B7WA/MFYA/MGFA/MGSA/M7WA 3rd Clutch #146)	1-4	
80140AC	Pressure Plate, B7XA/B7ZA/M7ZA 1st/2nd/3rd/4th Clutch (#3) (.090") 24 Teeth (Also BGFA/BVGA-5/BVGA-6/BVGA-7/MFYA/MGSA 4th/5th Clutch)(Also Fits BAYA/BGFA/B7WA/MFYA/MGFA/MGSA/M7WA 3rd Clutch #146)	1-4	
80140AD	Pressure Plate, B7XA/B7ZA/M7ZA 1st/2nd/3rd/4th Clutch (#4) (.094") 24 Teeth (Also BGFA/BVGA-5/BVGA-6/BVGA-7/MFYA/MGSA 4th/5th Clutch)(Also Fits BAYA/BGFA/B7WA/MFYA/MGFA/MGSA/M7WA 3rd Clutch #146)	1-4	
80140AE	Pressure Plate, B7XA/B7ZA/M7ZA 1st/2nd/3rd/4th Clutch (#5) (.098") 24 Teeth (Also BGFA/BVGA-5/BVGA-6/BVGA-7/MFYA/MGSA 4th/5th Clutch)(Also Fits BAYA/BGFA/B7WA/MFYA/MGFA/MGSA/M7WA 3rd Clutch #146)	1-4	
80140AF	Pressure Plate, B7XA/B7ZA/M7ZA 1st/2nd/3rd/4th Clutch (#6) (.102") 24 Teeth (Also BGFA/BVGA-5/BVGA-6/BVGA-7/MFYA/MGSA 4th/5th Clutch)(Also Fits BAYA/BGFA/B7WA/MFYA/MGFA/MGSA/M7WA 3rd Clutch #146)	1-4	
80140AG	Pressure Plate, B7XA/B7ZA/M7ZA 1st/2nd/3rd/4th Clutch (#7) (.106") 24 Teeth (Also BGFA/BVGA-5/BVGA-6/BVGA-7/MFYA/MGSA 4th/5th Clutch)(Also Fits BAYA/BGFA/B7WA/MFYA/MGFA/MGSA/M7WA 3rd Clutch #146)	1-4	
80140AH	Pressure Plate, B7XA/B7ZA/M7ZA 1st/2nd/3rd/4th Clutch (#8) (.110") 24 Teeth (Also BGFA/BVGA-5/BVGA-6/BVGA-7/MFYA/MGSA 4th/5th Clutch)(Also Fits BAYA/BGFA/B7WA/MFYA/MGFA/MGSA/M7WA 3rd Clutch #146)	1-4	
80140AJ	Pressure Plate, B7XA/B7ZA/M7ZA 1st/2nd/3rd/4th Clutch (#9) (.114") 24 Teeth (Also BGFA/BVGA-5/BVGA-6/BVGA-7/MFYA/MGSA 4th/5th Clutch)(Also Fits BAYA/BGFA/B7WA/MFYA/MGFA/MGSA/M7WA 3rd Clutch #146)	1-4	

© Whatever It Takes Transmission Parts. Inc.

70140BA.....Pressure Plate, BAYA/BYBA/B7WA/MGFA/MGHA/M7WA 4th/5th Clutch (.083") #1 (Also Fits B7TA/B7VA 3rd/4th Clutch).....1-2

70140BB.....Pressure Plate, BAYA/BYBA/B7WA/MGFA/MGHA/M7WA 4th/5th Clutch (.087") #2 (Also Fits B7TA/B7VA 3rd/4th Clutch).....1-2

70140BC.....Pressure Plate, BAYA/BYBA/B7WA/MGFA/MGHA/M7WA 4th/5th Clutch (.091") #3 (Also Fits B7TA/B7VA 3rd/4th Clutch).....1-2

70140BD.....Pressure Plate, BAYA/BYBA/B7WA/MGFA/MGHA/M7WA 4th/5th Clutch (.094") #4 (Also Fits B7TA/B7VA 3rd/4th Clutch).....1-2

70140BE.....Pressure Plate, BAYA/BYBA/B7WA/MGFA/MGHA/M7WA 4th/5th Clutch (.098") #5 (Also Fits B7TA/B7VA 3rd/4th Clutch).....1-2

70140BF.....Pressure Plate, BAYA/BYBA/B7WA/MGFA/MGHA/M7WA 4th/5th Clutch (.102") #6 (Also Fits B7TA/B7VA 3rd/4th Clutch).....1-2

70140BG.....Pressure Plate, BAYA/BYBA/B7WA/MGFA/MGHA/M7WA 4th/5th Clutch (.106") #7 (Also Fits B7TA/B7VA 3rd/4th Clutch).....1-2

70140BH.....Pressure Plate, BAYA/BYBA/B7WA/MGFA/MGHA/M7WA 4th/5th Clutch (.110") #8 (Also Fits B7TA/B7VA 3rd/4th Clutch).....1-2

70140BJ.....Pressure Plate, BAYA/BYBA/B7WA/MGFA/MGHA/M7WA 4th/5th Clutch (.114") #9 (Also Fits B7TA/B7VA 3rd/4th Clutch).....1-2

20144E.....Pressure Plate, MGHA 2nd Clutch (.161") (Use 70150B).....1

20144F.....Pressure Plate, B7ZA / B7XA 2nd Clutch (Use 80140AA-AJ).....1

20144H.....Pressure Plate, B7VA 2nd Clutch (Use 20146EA-EJ).....1

20146D.....Pressure Plate, BAYA/B7WA/M7WA/MFYA/MGSA 3rd Clutch (Use 80140AA thru 80140AJ).....1

20146EA.....Pressure Plate, BVGA-5/BVGA-6/BVGA-7/BYBA/MGHA 3rd Clutch (.083") #1 (20 Teeth) 3.672"ID (Also Fits B7TA/B7VA 1st & 2nd Clutch #144 & #148).....1-2

20146EB.....Pressure Plate, BVGA-5/BVGA-6/BVGA-7/BYBA/MGHA 3rd Clutch (.086") #2 (20 Teeth) 3.672"ID (Also Fits B7TA/B7VA 1st & 2nd Clutch #144 & #148).....1-2

20146EC.....Pressure Plate, BVGA-5/BVGA-6/BVGA-7/BYBA/MGHA 3rd Clutch (.090") #3 (20 Teeth) 3.672"ID (Also Fits B7TA/B7VA 1st & 2nd Clutch #144 & #148).....1-2

20146ED.....Pressure Plate, BVGA-5/BVGA-6/BVGA-7/BYBA/MGHA 3rd Clutch (.094") #4 (20 Teeth) 3.672"ID (Also Fits B7TA/B7VA 1st & 2nd Clutch #144 & #148).....1-2

20146EE.....Pressure Plate, BVGA-5/BVGA-6/BVGA-7/BYBA/MGHA 3rd Clutch (.098") #5 (20 Teeth) 3.672"ID (Also Fits B7TA/B7VA 1st & 2nd Clutch #144 & #148).....1-2

20146EF.....Pressure Plate, BVGA-5/BVGA-6/BVGA-7/BYBA/MGHA 3rd Clutch (.102") #6 (20 Teeth) 3.672"ID (Also Fits B7TA/B7VA 1st & 2nd Clutch #144 & #148).....1-2

20146EG.....Pressure Plate, BVGA-5/BVGA-6/BVGA-7/BYBA/MGHA 3rd Clutch (.106") #7 (20 Teeth) 3.672"ID (Also Fits B7TA/B7VA 1st & 2nd Clutch #144 & #148).....1-2

20146EH.....Pressure Plate, BVGA-5/BVGA-6/BVGA-7/BYBA/MGHA 3rd Clutch (.110") #8 (20 Teeth) 3.672"ID (Also Fits B7TA/B7VA 1st & 2nd Clutch #144 & #148).....1-2

20146EJ.....Pressure Plate, BVGA-5/BVGA-6/BVGA-7/BYBA/MGHA 3rd Clutch (.114") #9 (20 Teeth) 3.672"ID (Also Fits B7TA/B7VA 1st & 2nd Clutch #144 & #148).....1-2

20146EL.....Pressure Plate, BVGA-5/BVGA-6/BVGA-7/BYBA/MGHA 3rd Clutch (.118") #0 (20 Teeth) 3.672"ID (Also Fits B7TA/B7VA 1st & 2nd Clutch #144 & #148).....1-2

20148EA.....Pressure Plate, BAYA/BGFA/BVGA-5/BVGA-6/BVGA-7/BYBA/B7WA/MFYA/MGFA/MGHA/ MGSA/M7WA Low Clutch (.120")(#1).....1

20148EB.....Pressure Plate, BAYA/BGFA/BVGA-5/BVGA-6/BVGA-7/BYBA/B7WA/MFYA/MGFA/MGHA/ MGSA/M7WA Low Clutch (.124")(#2).....1

20148EC.....Pressure Plate, BAYA/BGFA/BVGA-5/BVGA-6/BVGA-7/BYBA/B7WA/MFYA/MGFA/MGHA/ MGSA/M7WA Low Clutch (.128")(#3).....1

20148ED.....Pressure Plate, BAYA/BGFA/BVGA-5/BVGA-6/BVGA-7/BYBA/B7WA/MFYA/MGFA/MGHA/ MGSA/M7WA Low Clutch (.132")(#4).....1

20148EE.....Pressure Plate, BAYA/BGFA/BVGA-5/BVGA-6/BVGA-7/BYBA/B7WA/MFYA/MGFA/MGHA/ MGSA/M7WA Low Clutch (.136")(#5).....1

20148EF.....Pressure Plate, BAYA/BGFA/BVGA-5/BVGA-6/BVGA-7/BYBA/B7WA/MFYA/MGFA/MGHA/ MGSA/M7WA Low Clutch (.140")(#6).....1

20148EG.....Pressure Plate, BAYA/BGFA/BVGA-5/BVGA-6/BVGA-7/BYBA/B7WA/MFYA/MGFA/MGHA/ MGSA/M7WA Low Clutch (.144")(#7).....1

20148EH.....Pressure Plate, BAYA/BGFA/BVGA-5/BVGA-6/BVGA-7/BYBA/B7WA/MFYA/MGFA/MGHA/ MGSA/M7WA Low Clutch (.148")(#8).....1

20148EJ.....Pressure Plate, BAYA/BGFA/BVGA-5/BVGA-6/BVGA-7/BYBA/B7WA/MFYA/MGFA/MGHA/ MGSA/M7WA Low Clutch (.152")(#9).....1

20148F.....Pressure Plate, B7ZA / B7XA 1st Clutch (Use 80140AA-AJ).....1

20148H.....Pressure Plate, B7VA 1st Clutch (Use 20146EA-EJ).....1

70150B.....Pressure Plate, MGHA 2nd Clutch (.161").....1

70150BA.....Pressure Plate, BAYA/BGFA/BVGA-5/BVGA-6/BVGA-7/BYBA/B7WA/MFYA/MGFA/MGHA/ MGSA/M7WA 2nd Clutch #144 (# 1)(.161").....1

70150BB.....Pressure Plate, BAYA/BGFA/BVGA-5/BVGA-6/BVGA-7/BYBA/B7WA/MFYA/MGFA/MGHA/ MGSA/M7WA 2nd Clutch #144 (# 2)(.165").....1

70150BC.....Pressure Plate, BAYA/BGFA/BVGA-5/BVGA-6/BVGA-7/BYBA/B7WA/MFYA/MGFA/MGHA/ MGSA/M7WA 2nd Clutch #144 (# 3)(.169").....1

© Whatever It Takes Transmission Parts. Inc.

PART #	PRESSURE PLATES (Continued)	QTY.	REFERENCE #
70150BD	Pressure Plate, BAYA/BGFA/BVGA-5/BVGA-6/BVGA-7/BYBA/B7WA/MFYA/MGFA/MGHA/ MGSA/M7WA 2nd Clutch #144 (# 4)(.173")	1	
70150BE	Pressure Plate, BAYA/BGFA/BVGA-5/BVGA-6/BVGA-7/BYBA/B7WA/MFYA/MGFA/MGHA/ MGSA/M7WA 2nd Clutch #144 (# 5)(.177")	1	
70150BF	Pressure Plate, BAYA/BGFA/BVGA-5/BVGA-6/BVGA-7/BYBA/B7WA/MFYA/MGFA/MGHA/ MGSA/M7WA 2nd Clutch #144 (# 6)(.181")	1	
70150BG	Pressure Plate, BAYA/BGFA/BVGA-5/BVGA-6/BVGA-7/BYBA/B7WA/MFYA/MGFA/MGHA/ MGSA/M7WA 2nd Clutch #144 (# 7)(.185")	1	
70150BH	Pressure Plate, BAYA/BGFA/BVGA-5/BVGA-6/BVGA-7/BYBA/B7WA/MFYA/MGFA/MGHA/ MGSA/M7WA 2nd Clutch #144 (# 8)(.189")	1	
70150BJ	Pressure Plate, BAYA/BGFA/BVGA-5/BVGA-6/BVGA-7/BYBA/B7WA/MFYA/MGFA/MGHA/ MGSA/M7WA 2nd Clutch #144 (# 9)(.193")	1	
20152E	Pressure Plate, BAYA/BGFA/BVGA-5/BVGA-6/BVGA-7/BYBA/B7WA/MFYA/MGFA/MGHA/ MGSA/M7WA Low Hold Clutch (.200")(24 Teeth)(3.672"ID)(Steps Down In Center)	1	

PART #	VALVE BODY KITS	QTY.	REFERENCE #
S20165B	Valve Body Kit, BAYA/BDGA-6/BDGA-7/BDGA-8/BGFA/BGHA/BGRA/BVGA-5/BVGA-6/BVGA-7 /BYBA/B7WA/MAYA/MGFA/MGHA/MGSA/M7WA/PGRA/PVGA (5 Speed, 6 Cylinder) (With .388"OD CPC Valves)(Contains: Pressure Regulator Valves, 2 CPC Valves, With Springs & End Plugs)(Superior)	1	
S20165C	Valve Body Kit, B7TA/B7VA/B7XA/B7YA/B7ZA/M7VA/M7ZA (4 Speed)(6 Cylinder)	1	

PART #	SEALING RINGS	QTY.	REFERENCE #
20175B	Ring Kit, BAYA/B7WA/BDGA-6/BDGA-7/BDGA-8/BGFA/BYBA/M7WA/BYBA/MAYA/MGFA 2000-06	1	
20175C	Ring Kit, M7ZA/B7VA/B7XA/B7YA/B7TA/B7ZA/MPZA 1996-Up	1	

PART #	WASHERS & BEARINGS	QTY.	REFERENCE #
30206A	Washer, BAYA/MGHA/ B7XA/B7ZAMAYA/MFYA/MGHA/MGSA/M7WA/ M7ZA/BVGA-5/ BVGA-6/BVGA-7/BYBA/B7TA/B7VA/B7WA/ Secondary Shaft Nut (Also Under Mainshaft & Countershaft Nuts)	1-3	
20207E	Use 30206A	1	
20208E	Use 30206A	1	
80209	Caged Needle Bearing, BAYA/BGFA/BVGA-5/BVGA-6/BVGA-7/BYBA/B7TA/B7VA/B7WA/ B7XA/B7ZA/MFYA/MGFA/MGHA/MGSA/M7WA/M7ZA Stator (Front) (1.040"OD)	1	
80211	Ball Bearing, BAYA/BGFA/BVGA-5/BVGA-6/BVGA-7/BYBA/B7TA/B7VA/B7WA/B7XA/B7ZA/ MFYA/MGFA/MGHA/MGSA/M7WA/M7ZA Bell Housing To Converter Reactor (2.675"OD)	1	
80214	Caged Needle Bearing, BAYA/BGFA/BVGA-5/BVGA-6/BVGA-7/BYBA/B7TA/B7VA/B7WA/ B7XA/B7ZA/MFYA/MGFA/MGHA/MGSA/M7WA/M7ZA Mainshaft To Converter Reactor (Rear) (.820" Wide)(1.130"OD)	1	
20214E	Caged Needle Brg, BAYA/BGFA /BVGA-5/BVGA-6/BVGA-7/BYBA /B7TA/B7VA/B7WA/B7XA/ B7ZA/MFYA/MGFA/MGHA/MGSA/M7WA/M7ZA Mainshaft To Conv Reactor (Rear) (.775"Wide)(1.130"OD)	1	
30217A	Thrust Bearing, B7TA/B7VA/B7XA/B7ZA/M7ZA 3rd Gear To Mainshaft (2.900"OD) (.097" Thick) (Also BAYA/BGFA/BVGA-5/BVGA-6/BVGA-7/BYBA/B7WA/MFYA/MGFA/MGHA/MGSA/M7WA 4th Gear)	1-2	
20220E	Caged Needle Bearing, BAYA/BYBA/B7WA/MFYA/MGHA/MGSA/M7WA 4th Gear (Mainshaft) (.833" Thick)(2.290"OD)(Inner)(Also Fits M7ZA 3rd Gear)	1	
20220F	Caged Needle Bearing, B7TA/B7VA/B7XA/B7ZA 3rd Gear (Mainshaft) (Inner) (.710" Thick) (2.290"OD) (Also Fits BGFA/BVGA-5/BVGA-6/BVGA-7/MGFA 4th Gear (Mainshaft)(Inner)	1	
60223E	Thrust Bearing, BAYA/BGFA/BVGA/BYBA/B7TA/B7VA/B7WA/MFYA/MGFA/MGHA/MGSA/M7WA 2nd Gear (Secondary Shaft #253)(2.194"OD)(.097" Thick)	1-2	
20224E	Race, BAYA/BGFA/BVGA-5/BVGA-6/BVGA-7/BYBA/B7WA/MFYA/MGFA/MGHA/MGSA/M7WA 4th Gear To 4th/5th Drum (.309" Thick)(2.875"OD)(Splined ID)(Also Fits B7TA/B7VA/B7XA/B7ZA /M7ZA 3rd Gear To 3rd/4th Drum)	1	
20224EA	Race, BAYA/BGFA/BVGA-5/BVGA-6/BVGA-7/BYBA/B7WA/MFYA/MGFA/MGHA/MGSA/M7WA 4th Gear To 4th/5th Drum (.311" Thick)(2.875"OD)(Splined ID)(Also Fits B7TA/B7VA/B7XA/B7ZA/ M7ZA 3rd Gear To 3rd/4th Drum)	1	
20224EB	Race, BAYA/BGFA/BVGA-5/BVGA-6/BVGA-7/BYBA/B7WA/MFYA/MGFA/MGHA/MGSA/M7WA 4th Gear To 4th/5th Drum (.313" Thick)(2.875"OD)(Splined ID)(Also Fits B7TA/B7VA/B7XA/B7ZA /M7ZA 3rd Gear To 3rd/4th Drum)	1	
20224EC	Race, BAYA/BGFA/BVGA-5/BVGA-6/BVGA-7/BYBA/B7WA/MFYA/MGFA/MGHA/MGSA/M7WA 4th Gear To 4th/5th Drum (.315" Thick)(2.875"OD)(Splined ID)(Also Fits B7TA/B7VA/B7XA/B7ZA /M7ZA 3rd Gear To 3rd/4th Drum)	1	

© Whatever It Takes Transmission Parts. Inc.

20224ED.....Race, BAYA/BGFA/BVGA-5/BVGA-6/BVGA-7/BYBA/B7WA/MFYA/MGFA/MGHA/MGSA/M7WA
.....4th Gear To 4th/5th Drum (.317" Thick)(2.875"OD)(Splined ID)(Also Fits B7TA/B7VA/B7XA/B7ZA
...../M7ZA 3rd Gear To 3rd/4th Drum).....1
20224EE.....Race, BAYA/BGFA/BVGA-5/BVGA-6/BVGA-7/BYBA/B7WA/MFYA/MGFA/MGHA/MGSA/M7WA
.....4th Gear To 4th/5th Drum (.319" Thick)(2.875"OD)(Splined ID)(Also Fits B7TA/B7VA/B7XA/B7ZA
...../M7ZA 3rd Gear To 3rd/4th Drum).....1
20225E .....Collar, BAYA/BGFA/BVGA-5/BVGA-6/BVGA-7/BYBA/B7TA/B7VA/B7WA/B7XA/B7ZA/MFYA/
.....MGFA/MGHA/MGSA/M7WA/M7ZA (Mainshaft)(2.305" Long) (1.062"ID).....1
30226B .....Thrust Bearing, B7TA/B7VA/B7XA/B7ZA/M7ZA 4th Gear (Mainshaft) #226 (.097" Thick)(Also Fits
.....B7XA/B7ZA/M7ZA 2nd Gear (Secondary Shaft) #253)(Also Fits BAYABGFA/BVGA-5/BVGA-6/
.....BVGA-7/BYBA/B7WA/MFYA/MGFA/MGHA/MGSA/M7WA 5th Gear (Mainshaft) #226) 1-2
30229A .....Caged Needle Bearing, B7TA/B7VA/B7XA/B7ZA/M7ZA 4th Gear (Mainshaft)(.070" Thick)(Also
.....Fits BAYA/BGFA/BVGA-5/BVGA-6/BVGA-7/BYBA/B7WA/MFYA/MGFA/MGHA/MGSA/M7WA
.....5th Gear (Mainshaft) #229 And 2nd Gear (Secondary Shaft) #229)..... 1-3
30232A .....Bearing, B7TA/B7VA/B7XA/B7ZA/M7ZA 4th Gear (Mainshaft) (1.800"OD) (.078" Thick)
.....(Also Fits BAYA/BGFA/BVGA-5/BVGA-6/BVGA-7/BYBA/B7WA/MFYA/MGFA/MGHA/MGSA/
.....M7WA 5th Gear (Mainshaft) 1
30233B .....Race, B7TA/B7VA/B7XA/B7ZA/M7ZA 4th Gear (Mainshaft) To Ball Bearing (1.848"OD)
.....(.194" Thick)(Also Fits BAYA/BGFA/BVGA-5/BVGA-6/BVGA-7/BYBA/B7WA/MFYA/MGFA/
.....MGHA/MGSA/M7WA 5th Gear (Mainshaft) To Ball Bearing).....1
20235E .....Ball Bearing, BAYA/BGFA/BVGA-5/BVGA-6/BVGA-7/BYBA/B7TA/B7VA/B7WA/B7XA/B7ZA/
.....MFYA/MGFA/MGHA/MGSA/M7WA/M7ZA Mainshaft To Case (1.100" Thick) (2.480"OD)
.....(1.060"ID) 1
30238A .....Ball Bearing, BAYA/BYBA/B7WA/MFYA/MGHA/MGSA/M7WA Secondary Shaft To Bell 1
30238B .....Roller Bearing, B7TA/B7VA/B7XA/B7ZA Bell To Secondary Shaft (.550" Thick)
.....(SE-NK-34x46x14).....1
30239A .....Retainer, BAYA/BGFA/BVGA-5/BVGA-6/BVGA-7/BYBA/B7TA/B7VA/B7WA/B7XA/B7ZA/MFYA/
.....MGFA/MGHA/MGSA/M7WA/M7ZA Holds Horse Shoe Clip (Secondary Shaft) (1.740"OD).....1
30240A .....Race, BAXA/B6VA/MAXA/MPZA/M6HA Low Gear (Secondary Shaft) (.269" Thick)(2.220"OD)
.....(Also Fits BAYA/BGFA/BVGA/BYBA/B7TA/B7VA/B7WA/B7XA/B7ZA/MFYA/MGHA/MGSA/M7WA
...../M7ZA # 240).....1
30240AA.....Race, BAXA/B6VA/MAXA/MPZA/M6HA Low Gear (Secondary Shaft) (.271" Thick)(2.220"OD)
.....(Also Fits BAYA/BGFA/BVGA-5/BVGA-6/BVGA-7/BYBA/B7TA/B7VA/B7WA/B7XA/B7ZA/MFYA
...../MGHA/MGSA/M7WA/M7ZA # 240).....1
30240AB.....Race, BAXA/B6VA/MAXA/MPZA/M6HA Low Gear (Secondary Shaft) (.273" Thick)(2.220"OD)
.....(Also Fits BAYA/BGFA/BVGA-5/BVGA-6/BVGA-7/BYBA/B7TA/B7VA/B7WA/B7XA/B7ZA/MFYA
...../MGHA/MGSA/M7WA/M7ZA # 240).....1
30240AC.....Race, BAXA/B6VA/MAXA/MPZA/M6HA Low Gear (Secondary Shaft) (.275" Thick)(2.220"OD)
.....(Also Fits BAYA/BGFA/BVGA-5/BVGA-6/BVGA-7/BYBA/B7TA/B7VA/B7WA/B7XA/B7ZA/MFYA
...../MGHA/MGSA/M7WA/M7ZA # 240).....1
30240AD.....Race, BAXA/B6VA/MAXA/MPZA/M6HA Low Gear (Secondary Shaft) (.277" Thick)(2.220"OD)
.....(Also Fits BAYA/BGFA/BVGA-5/BVGA-6/BVGA-7/BYBA/B7TA/B7VA/B7WA/B7XA/B7ZA/MFYA
...../MGHA/MGSA/M7WA/M7ZA # 240).....1
30240AE.....Race, BAXA/B6VA/MAXA/MPZA/M6HA Low Gear (Secondary Shaft) (.279" Thick)(2.220"OD)
.....(Also Fits BAYA/BGFA/BVGA-5/BVGA-6/BVGA-7/BYBA/B7TA/B7VA/B7WA/B7XA/B7ZA/MFYA
...../MGHA/MGSA/M7WA/M7ZA # 240).....1
30241B .....Caged Needle Bearing, B7TA/B7VA/B7XA/B7ZA 1st Gear (Secondary Shaft) (1.708"OD)
.....(1.124" Thick).....1
20241E .....Caged Needle Bearing, BAYA/BGFA/BVGA-5/BVGA-6/BVGA-7/BYBA/B7WA/MFYA/MGFA/
.....MGHA/MGSA/M7WA 20Low Gear (Secondary Shaft) (1.705"OD) (.775" Wide).....1
20242E .....Bearing, BAYA/BGFA/BVGA/BYBA/B7TA/B7VA/B7WA/B7XA/B7ZA/MFYA/MGFA/MGHA/MGSA/
.....M7WA/M7ZA 1st Gear (Secondary Shaft) & Low/Hold Clutch Hub (Use 30244B).....2
30244B .....Bearing, BAYA/BGFA/BVGA-5/BVGA-6/BVGA-7/B7TA/B7VA/B7WA/B7XA/B7ZA/MFYA/MGFA/
.....MGHA/MGSA/M7WA/MZ7A 1st Gear (Secondary Shaft) And Low/Hold Clutch Hub (2.230"OD)
.....(.097" Thick) 2
30251A .....Caged Needle Bearing, B7TA/B7VA/B7XA/B7ZA 2nd Gear (Secondary Shaft) (1.083' Thick)
.....(1.540"OD) 1
30251E .....Caged Needle Bearing, MGHA 2nd Gear (Secondary Shaft) (Use 30229A).....1
20252E .....Race, BGFA/BVGA-5/BVGA-6/BVGA-7/B7VA/MGHA 2nd Gear (Secondary Shaft) To
.....1st/2nd Drum (.272" Thick)(2.220"OD)(Use 30247A-30247AF) 1
20252F .....Race, BAYA/BYBA/B7WA/B7XA/B7ZA/MFYA/MGSA/M7WA 2nd Gear (Secondary Shaft) To
.....1st/2nd Drum (2.165"OD) (.197" Thick)(Use 30247A-30247AF) 1
30247A .....Race, BAYA/BGFA/BVGA-5/BVGA-6/BVGA-7/BYBA/B7TA/B7VA/B7WA/B7XA/B7ZA/MYFA/
.....MGFA/MGHA/MGSA/M7WA/M7ZA 2nd Gear (Second Shaft) To 1st/2nd Drum (#252)
.....(2.155"OD)(.193" Thick).....1
30247AA.....Race, BAYA/BGFA/BVGA-5/BVGA-6/BVGA-7/BYBA/B7TA/B7VA/B7WA/B7XA/B7ZA/MYFA/
.....MGFA/MGHA/MGSA/M7WA/M7ZA 2nd Gear (Second Shaft) To 1st/2nd Drum (#252)
.....(2.155"OD)(.195" Thick).....1

© Whatever It Takes Transmission Parts. Inc.

PART #	WASHERS & BEARINGS (Continued)	QTY.	REFERENCE #
30247AB	Race, BAYA/BGFA/BVGA-5/BVGA-6/BVGA-7/BYBA/B7TA/B7VA/B7WA/B7XA/B7ZA/MYFA/ MGFA/MGHA/MGSA/M7WA/M7ZA 2nd Gear (Second Shaft) To 1st/2nd Drum (#252) (2.155"OD)(.197" Thick)	1	
30247AC	Race, BAYA/BGFA/BVGA-5/BVGA-6/BVGA-7/BYBA/B7TA/B7VA/B7WA/B7XA/B7ZA/MYFA/ MGFA/MGHA/MGSA/M7WA/M7ZA 2nd Gear (Second Shaft) To 1st/2nd Drum (#252) (2.155"OD)(.199" Thick)	1	
30247AD	Race, BAYA/BGFA/BVGA-5/BVGA-6/BVGA-7/BYBA/B7TA/B7VA/B7WA/B7XA/B7ZA/MYFA/ MGFA/MGHA/MGSA/M7WA/M7ZA 2nd Gear (Second Shaft) To 1st/2nd Drum (#252) (2.155"OD)(.201" Thick)	1	
30247AE	Race, BAYA/BGFA/BVGA-5/BVGA-6/BVGA-7/BYBA/B7TA/B7VA/B7WA/B7XA/B7ZA/MYFA/ MGFA/MGHA/MGSA/M7WA/M7ZA 2nd Gear (Second Shaft) To 1st/2nd Drum (#252) (2.155"OD)(.203" Thick)	1	
30247AF	Race, BAYA/BGFA/BVGA-5/BVGA-6/BVGA-7/BYBA/B7TA/B7VA/B7WA/B7XA/B7ZA/MYFA/ MGFA/MGHA/MGSA/M7WA/M7ZA 2nd Gear (Second Shaft) To 1st/2nd Drum (#252) (2.155"OD)(.205" Thick)	1	
20253DA	Bearing, BYBA 2nd Gear (Secondary Shaft)(.137" Thick)(2.625"OD) 2000-Up	1	
20253E	Thrust Bearing, MGHA/B7XA 2nd Gear (Secondary Shaft) (Both Sides) (Use 60223E)	1-2	
60223E	Bearing, BAYA/BGFA/BVGA-5/BVGA-6/BVGA-7/BYBA/B7TA/ B7VA/B7WA/MFYA/MGFA/ MGHA/MGSA/M7WA 2nd Gear (Secondary Shaft) # 253 (.097" Thick)(2.194"OD)	1	
20253F	Thrust Bearing, MGHA/B7XA 2nd Gear (Secondary Shaft) (Both Sides) (Use 30226B)	1-2	
30226B	Bearing, B7XA/B7ZA/M7ZA 2nd Gear (Secondary Shaft) (# 253)(.097" Thick)(2.094"OD)	1	
80254	Caged Roller Bearing, BAYA/BGFA/BVGA-5/BVGA-6/BVGA-7/BYBA/B7TA/B7VA/B7WA/B7XA /B7ZA/MFYA/MGFA/MGHA/MGSA/M7WA/M7ZA Bell Housing To Countershaft	1	
20255E	Ball Bearing, BAYA/BGFA/BVGA-5/BVGA-6/BVGA-7/BYBA/B7TA/B7VA/B7WA/MFYA/MGFA /MGHA/MGSA/M7WA Secondary Shaft To Case (.744" Thick Outer Race)(.715" Thick Inner Race)(3.300"OD)(1.060"ID)(Cast #B27-12NX)	1	
20555EA	Ball Bearing, BAYA/BGFA/BVGA-5/BVGA-6/BVGA-7/BYBA/B7TA/B7VA/B7WA/MYFA/MGFA/ MGHA/MGSA/M7WA Secondary Shaft To Case (.744" Thick Outer Race)(.640" Thick Inner Race)(3.300"OD)(1.060"ID)(Cast #B27-12NX)	1	
20255F	Ball Bearing, B7XA/B7ZA/M7ZA Secondary Shaft To Case (.744" Thick)(3.150"OD)(1.060"ID) (Cast # B27-9NX) 1998-99	1	
20257E	Use 80254	1	
20267E	Collar, BAYA/BVGA-5/BVGA-6/BVGA-7/BYBA/B7WA/MGHA 4th Gear To 5th Gear (Countershaft) (1.863" Long)(1.850"OD)(1.383"ID)	1	
20267F	Gear, B7TA/B7VA/B7XA/B7ZA/M7ZA 3rd Gear To 4th Gear (Countershaft) (2.185" Long) (1.850"OD) (1.383"ID) (Also Fits BGFA/MFYA/MGFA/MGSA/M7WA 4th Gear To 5th Gear (Countershaft)	1	
30269A	Collar, BAYA/BGFA/BVGA-5/BVGA-6/BVGA-7/BYBA/B7WA/MGFA/MGHA Collar Clip (.305" Thick)(1.845"OD)	1	
30271A	Caged Needle Bearing, B7TA/B7VA/B7XA/B7ZA/M7ZA 4th Gear (Countershaft)(Inner) (1.007" Thick)(Also Fits BAYA/BGFA/BVGA-5/BVGA-6/BVGA-7/BYBA/B7WA/MFYA/MGFA/ MGHA/MGSA/M7WA 5th Gear)	1	
30273B	Caged Bearing, BAYA/BGFA/BVGA-5/BVGA-6/BVGA-7/BYBA/B7TA/B7VA/B7WA/B7XA/B7ZA /MFYA/MGFA/MGHA/MGSA/M7WA/M7ZA Reverse Gear To Countershaft (.569" Thick) (1.770"OD)	1	
20274DCB	Ball Bearing, BDGA-8 Countershaft To Case (1.002" Thick Outer Race)(3.188"OD)(1.220"ID) (790"Thick Inner Race) 2006	1	
20274E	Ball Bearing, BAYA/BGFA/BVGA-5/BVGA-6/BVGA-7/BYBA/B7TA/B7VA/B7WA/B7XA/B7ZA/ MFYA/MGFA/MGHA/MGSA/M7WA/M7ZA Countershaft To Case (.804" Thick)(2.953"OD) (1.220"ID)	1	
20274EA	Ball Bearing, BAYA/BDGA-7/BGFA/BVGA-5/BVGA-6/BVGA-7/BYBA/B7TA/B7VA/B7WA/B7XA /B7ZA/MFYA/MGFA/MGHA/MGSA/M7WA/M7ZA Countershaft To Case (.844" Thick Outer Race) (3.188"OD)(1.220"ID)(.790" Thick Inner Race)	1	
20274EB	Ball Bearing, B7TA/B7XA Countershaft To Case (.844" Thick Outer Race)(3.188"OD)(1.220"ID) (.715" Thick Inner Race)	1	
20275E	Ball Bearing, BGFA/BVGA-5/BVGA-6/BVGA-7/MGHA Transfer Gear To Case (12 Balls) (.705"Thick)(2.835"OD)(.944"ID)	1	
20276E	Ball Bearing, BGFA/BVGA-5/BVGA-6/BVGA-7/MGHA Bell Housing To Transfer Gear (1.100" Thick)(2.835"OD)(1.375"ID)	1	
20277E	Shim, BGFA/BVGA-5/BVGA-6/BVGA-7/MGHA Transfer Gear To Rear Ball Bearing (.067")	1	
20277EA	Shim, BGFA/BVGA-5/BVGA-6/BVGA-7/MGHA Transfer Gear To Rear Ball Bearing (.070")	1	
20277EB	Shim, BGFA/BVGA-5/BVGA-6/BVGA-7/MGHA Transfer Gear To Rear Ball Bearing (.072")	1	
20277EC	Shim, BGFA/BVGA-5/BVGA-6/BVGA-7/MGHA Transfer Gear To Rear Ball Bearing (.074")	1	
20277ED	Shim, BGFA/BVGA-5/BVGA-6/BVGA-7/MGHA Transfer Gear To Rear Ball Bearing (.077")	1	
20277EE	Shim, BGFA/BVGA-5/BVGA-6/BVGA-7/MGHA Transfer Gear To Rear Ball Bearing (.079")	1	
20277EF	Shim, BGFA/BVGA-5/BVGA-6/BVGA-7/MGHA Transfer Gear To Rear Ball Bearing (.082")	1	
20277EG	Shim, BGFA/BVGA-5/BVGA-6/BVGA-7/MGHA Transfer Gear To Rear Ball Bearing (.085")	1	
20277EH	Shim, BGFA/BVGA-5/BVGA-6/BVGA-7/MGHA Transfer Gear To Rear Ball Bearing (.087")	1	

© Whatever It Takes Transmission Parts. Inc.

20281E ..... Bearing, BAYA/BGFA/BVGA-5/BVGA-6/BVGA-7/BYBA/B7TA/B7VA/B7WA/B7XA/B7ZA/MFYA
..... /MGFA/MGHA/MGSA/M7WA/M7ZA 3rd Gear To Race (.137" Thick) (2.626"OD) 2
30282A ..... Washer, BAYA/BGFA/BVGA-5/BVGA-6/BVGA-7/BYBA/B7TA/B7VA/B7WA/B7XA/B7ZA/MFYA
..... /MGFA/MGHA/MGSA/M7WA/M7ZA # 284 (.040" Thick) (1.170"OD) (With Lip And 2 Notches) 1
20282E ..... Race, BAYA/BGFA/BVGA-5/BVGA-6/BVGA-7/BYBA/B7WA/MFYA/MGFA/MGHA/MGSA/M7WA
..... 3rd Clutch Drum To 3rd Gear (.344" Thick)(2.500"OD)(4 Notches) 1
20282F ..... Race, B7TA/B7VA/B7XA/B7ZA/M7ZA Idler Gear (Countershaft) To Ball Bearing (.670" Thick)
..... (2.595"OD)(2 Notches & 2 Holes) 1
80283A ..... Caged Needle Bearing, BAYA/BYBA/B7TA/B7VA/B7WA/B7XA/B7ZA/MFYA/MGHA/MGSA/M7WA
..... Reverse Idler (12 Rollers) 2
30284A ..... Washer, BAYA/BGFA/BVGA-5/BVGA-6/BVGA-7/BYBA/B7TA/B7VA/B7WA/B7XA/B7ZA/MFYA/
..... MGFA/MGHA/MGSA/M7WA/M7ZA Washer # 204 (.040" Thick)(1.175"OD)(Flat) 1
20284A ..... Washer, MGHA / B7VA / B7ZA / B7XA Reverse Idler Gear To Housing (.040" Thick) (1.170"OD
..... With Lip And 2 Notches) (Use 30282A) 1
30285B ..... Caged Needle Bearing, BAYA/BGFA/BVGA-5/BVGA-6/BVGA-7/BYBA/B7TA/B7VA/B7WA/B7XA
..... /B7ZA/MFYA/MGFA/MGHA/MGSA/M7WA/M7ZA Idler Gear To Countershaft (.730" Thick)
..... (1.925"OD) 1
20286E ..... Ball Bearing, BAYA/BGFA/BVGA-7/BVGA-6/BVGA-7/BYBA/B7TA/B7VA/B7WA/B7XA/B7ZA/
..... MFYA/MGFA/MGHA/MGSA/M7WA/M7ZA Idler Gear (Secondary Shaft)To Rear Cover
..... (.391" Thick)(3.485"OD)(2.555"ID) 1
20287E ..... Ball Bearing, BAYA/BGFA/BVGA-5/BVGA-6/BVGA-7/BYBA/B7WA/MGFA/MGHA/MGSA/M7WA
..... 3rd Clutch Drum To Rear Cover (.312" Thick)(3.290"OD)(2.360"ID)(22 Balls) 1
20287F ..... Ball Bearing, B7TA/B7VA/B7XA/B7ZA/M7ZA Idler Gear To Rear Cover (.390" Thick) (17 Balls) ... 1
20287X ..... Ball Bearing, MFYA 3rd Clutch Drum To Rear Cover (.312" Thick) 3.290"OD (2.260"ID)
..... 21 Balls 1
20288E ..... Cup Race, BGFA/BVGA/B7TA/B7VA/B7WA/MFYA/MGFA/MGHA/MGSA/M7WA Differential To
..... Case (3.190"OD) (Cast # ETA-CR-09A14ST Or #ETA-CR-09A13ST)
..... (Also Fits Some BAYA/BYBA/B7XA/B7ZA/M7ZA) 1
30288B ..... Cup Race, B7XA/B7ZA/M7ZA Differential To Case (3.000"OD) (Cast # ET-CR-08A35ST) 1
40289AK ..... Cone Bearing W/Cup Race, BGRA Differential To Case (24 Roller Bearing 1.770"ID)
..... (3.350"OD Cup Race) 1
30289B ..... Cone Bearing, MFYA/MGSA/Some B7XA/B7ZA/M7ZA Differential To Case (21 Rollers)
..... (Cast # ET-CR-0835ST) 1
30289BK ..... Roller Bearing W/Cup Race, MFYA/MGSA/Some B7XA/B7ZA/M7ZA Differential To Case
..... (21 Roller Bearing With Cast # ET-CR-0835ST Or ETA-CR-08A72ST)(3.000"OD Cup Race With
..... Cast # ET-CR-08A35ST Or ETA-CR-08A72ST) 1
20289CK ..... Cone Bearing W/Cup Race, Some B7XA/B7ZA Differential To Case (24 Roller Bearing)
..... 3.190"OD Cup Race (Bearing Cast # ETA-CR-08A80ST) (Cup Race Cast #
..... ETA-CR-08A14ST) 1
20289DK ..... Cone Bearing, BAYA/BYBA (Some) Differential To Case (24 Roller Bearing, 1.770"ID With Cast
..... # ETA-CR-09A43ST)(3.190"OD Cup Race, Cast # ETA-CR-09A43ST) 1
20289E ..... Cone Bearing, BGFA/BVGA-5/BVGA-6/BVGA-7/B7TA/B7VA/B7WA/MFYA/MGFA/MGHA/MGSA
..... /M7WA Differential To Case (24 Rollers)(1.770"ID) (Cast # ET-CR-09A23ST) (Also Fits Some
..... BAYA/BYBA/B7XA/B7ZA/M7ZA) 1
20289EK ..... Cone Bearing W/Cup Race, BGFA/BVGA-5/BVGA-6/BVGA-7/B7TA/B7VA/B7WA/MFYA/MGFA
..... /MGHA/MGSA/M7WA Differential To Case (24 Roller Bearing)(1.770"ID)
..... (Cast # ETA-CR-09A23ST)(3.190"OD Cup Race)(Cast #ETA-CR-09A14ST Or ETA-CR-09A13ST)
..... (Also Fits Some BAYA/BYBA/B7XA/B7ZA/M7ZA) 1
20290E ..... Spacer, BAYA/BGFA/BVGA-5/BVGA-6/BVGA-7/BYBA/B7WA/MFYA/MGHA/MGSA/M7WA
..... Differential To Case & Differential To Bell Housing (3.190"OD) (1.830"ID) (Also Fits B7VA
..... Differential To Case Only) 1-2
20290F ..... Spacer, B7TA/B7XA/B7ZA/MGFA/M7ZA Differential To Case To Bell Housing (3.140"OD)
..... (1.615"ID) 2
20290H ..... Spacer, B7VA Differential To Bell (3.140"OD) (1.810"ID) 1
30291B ..... Cup Race, B7WA/MGSA And Some B7XA/B7ZA/M7ZA Differential To Bell (3.150"OD)
..... Cast # ET-CR-08A32ST Or ET-CR-09A14ST Or ETA-CR-08A71ST 1
20291D ..... Cup Race, BAYA/BVGA/BYBA Differential To Bell Housing (.610" Thick) (3.150"OD)
..... (Cast # ETA-CR-09A44ST) 1
20291E ..... Cup Race, BGFA/B7TA/B7VA/MFYA/MGFA/MGHA/M7WA Differential To Bell Housing
..... (.548" Thick) (3.150"OD) (Cast # ET-CR-09A15ST Or ET-CR-09A79ST) 1
30292B ..... Cone Bearing, B7WA/B7XA/B7ZA/MGSA/M7WA Differential To Bell (20 Rollers)(1.575"ID)
..... (Cast # ET-CR-0834ST) 1
30292BK ..... Cone Bearing W/Cup Race, B7WA/MGSA & Some B7XA/B7ZA/M7ZA Differential To Bell
..... (20 Roller Bearing, 1.575"ID, 3.150"OD Cup Race)(Bearing Cast # ET-CR-0834ST Or
..... ETA-CR-08A71ST) (Race Cast # ET-CR-08A32ST Or ET-CR-09A14ST Or ETA-CR-08A71ST) .. 1
20292CK ..... Cone Bearing W/Cup Race, Some B7XA / B7ZA Differential To Bell Housing (20 Roller Bearing,
..... 1.575"ID, 3.150"OD Cup Race (Bearing Cast # ETA-CR-08A79ST) (Cup Race Cast #
..... ETA-CR-08A79ST) 1
20292D ..... Cone Bearing, BAYA/BVGA-5/BVGA-6/BVGA-7/BYBA Differential To Bell Housing (20 Rollers)
..... (1.770"ID) (Cast # ETA-CR-09A44ST) 1

© Whatever It Takes Transmission Parts. Inc.

PART #	WASHERS & BEARINGS (Continued)	QTY.	REFERENCE #
20292DK	Cone Bearing With Cup Race, BAYA/BVGA-5/BVGA-6/BVGA-7/BYBA Differential To Bell Housing (20 Roller Bearing)(3.150"OD Cup Race)(Bearing Cast # ETA-CR-09A44ST) (Cup Race Cast # ETA-CR-09A44ST)	1	
20292E	Cone Bearing, BGFA/B7TA/B7VA/MFYA/MGFA/MGHA/M7WA Differential To Bell Housing (20 Rollers)(1.770"ID)(Cast # ET-CR-09A15ST Or ET-CR-09A46ST)	1	
20292EK	Cone Bearing W/Cup Race, BGFA/B7TA/B7VA/MFYA/MGFA/MGHA/M7WA Differential To Bell Housing (20 Roller Bearing, 1.770"ID, 3.150"OD Cup Race)(Bearing Cast # ET-CR-09A15ST Or ET-CR-09A46ST)(Cup Race Cast # ET-CR-09A15ST Or ET-CR-09A79ST)	1	
20294E	Shim, BAYA/BGFA/BVGA-5/BVGA-6/BVGA-7/BYBA/B7WA/MFYA/MGFA/MGHA/MGSA/M7WA Low Sprag To Ball Bearing (Secondary Shaft)	1	
20296E	Race, BAYA/BYBA/B7WA/MFYA/MGHA/MGSA/M7WA Low Sprag Retainer (4 Tab) (Tin)	1	
20297E	Ball Bearing, BAYA/BGFA/BVGA-5/BVGA-6/BVGA-7/BYBA/B7WA/MFYA/MGFA/MGHA/MGSA /M7WA Low Gear To Low/Hold Clutch Hub (Secondary Shaft)	1	

PART #	GASKETS & RUBBER COMPONENTS	QTY.	REFERENCE #
20305B	Gasket, BAYA/BDGA-6/BDGA-7/BDGA-8/BGHA/BGRA/BYBA/B7WA/MGFA/MGHA/M7WA/ BVGA-5/BVGA-6/BVGA-7 Rear Cover 2000-05	1	
20305G	Gasket, B7XA/B7ZA/M7ZA Rear Cover To Case 1997-99 (Has 2 Long Ports By The Vent)	1	
20305GA	Gasket, B7TA/B7VA/B7XA/B7YA Rear Cover To Case 1999-02 (Has 1 Long & 1 Short Port By The Vent)	1	
20305H	Gasket, B7TA/B7VA Rear Cover To Case 1999-01 (Use 20305GA)	1	
60313A	O-Ring, Honda Converter (OE Upgraded)(Fits On ConverterHub, Inside Of Drive Pump Gear)	1	
20318B	Gasket, BGHA/MGHA Bell Housing To Case 2001-02 (Also BVGA-5/BVGA-6/BVGA-7 2003-05)	1	
20318C	Gasket, B7TA/B7VA/B7XA/B7YA/B7ZA/M7ZA Bell Housing To Case	1	
20318E	Gasket, BAYA/BDGA-6/BDGA-7/BDGA-8/BGFA/BYBA/B7WA/MGFA/M7WA Bell Housing To Case 2000-04	1	
20318P	Gasket, BGRA Bell Housing To Case 2005-06	1	
20327B	Gasket, BAYA ATF Warmer Body To Case/ATF Passage Body	1	
20328CK	Gasket/O-Rings, M7ZA/B7VA/B7XA/B7YA/B7TA/B7ZA Linear Solenoid Subkit 1998-Up	1	
20332D	O-Ring, BYBA/B7WA 2nd Clutch Piston (Inner)	1	
20332H	O-Ring, B7VA 2nd Clutch Piston (Inner)	1	
20333D	O-Ring, BYBA 2nd Clutch Piston (Outer)	1	
20333H	O-Ring, B7VA 2nd Clutch Piston (Outer)	1	
20333Q	O-Ring, B7WA 2nd Clutch Piston (Outer)	1	
20336D	O-Ring, BAYA/BYBA 3rd Clutch Piston (Inner)	1	
20337D	O-Ring, BYBA 3rd Clutch Piston (Outer)	1	
20358B	Ring, BAYA Secondary Shaft	4	

PART #	TECHNICAL MANUALS	QTY.	REFERENCE #
20400E	Rebuild Manual, 20 Series (5 Spped Honda)(ATRA)	1	

PART #	ELECTRICAL COMPONENTS	QTY.	REFERENCE #
20410E	Neutral Switch, BAYA/BVGA-5/BVGA-6/BVGA-7/BYBA/B7WA/MFYA/MGHA/MGSA/M7WA (21" Long Wire Harness) (With 10 Prong Sguare Connector)	1	
20410H	Neutral Switch, BGFA/B7TA/B7VA/B7XA/MGFA (17" Long Wire Harness) (With 10 Prong Square Connector)	1	
40411B	Switch, BYBA Pressure (With Tan Connector #411 In Bell)(Also Fits BAYA/BGFA/BVGA-5/ BVGA-6/BVGA-7/BYBA/B7WA/MFYA/MGFA/MGHA/MJFA/M7WA With Tan Connector #439 The Lower One On Rear Cover)	1	
30411CA	Switch, BGFA/BVGA-5/BVGA-6/BVGA-7/B7TA/B7VA/B7XA/B7ZA/MGFA/MGHA #411 & #439) (Black Connector)(1 Prong)(33 PSI)(Stepped)	1-2	
20411D	Switch, BAYA/MJFA 2nd & 3rd Clutch Pressure (Screws In Bell Housing)(Grey, Black Or Beige Square Connector)(Also BAYA/BGFA/BVGA-5/BVGA-6/BVGA-7/BYBA/B7TA/B7VA/B7WA/B7XA/ B7YA/B7ZA/MFYA/MGFA/MGHA/MGSA/M7WA/M7ZA # 411 & # 439)	1	
20411E	Switch, BYBA Pressure (Tan Connector) (Screws In Bell Housing)	1	
30421B	Solenoid,BAYA/BGFA/BVGA-5/BVGA-6/BVGA-7/BYBA/B7WA/MFYA/MGFA/MGHA/MGSA /M7WA #421 & #425 (Brown Connector)(Also Fits B7TA/B7VA/B7XA/B7YA/B7ZA/M7ZA # 421)	1	
30422B	Solenoid, BAYA/BGFA/BVGA-5/BVGA-6/BVGA-7/BYBA/B7WA/MFYA/MGFA/MGHA/MGSA/ M7WA # 422 & # 425 (Black Connector) (Also Fits B7TA/B7VA/B7XA/B7YA/B7ZA/M7ZA #422) (Also Fits BVGA-5/BVGA-6/BVGA-7 #425)(Also BGRA #421 & #422)	1	
30423BK	Solenoid Assembly, BAYA/BDGA-6/BDGA-7/BDGA-8/BGFA/BGHA/BGRA/BVGA-5/BVGA-6/ BVGA-7/BYBA/B7TA/B7VA/B7WA/B7XA/B7YA/B7ZA/MFYA/MGFA/MGHA/MGSA/M7WA/M7ZA #756 and #423)(Linear)(Dual Solenoid Assembly With Aluminum Body)(On The Case)	1	

© Whatever It Takes Transmission Parts. Inc.

20757E ..... Housing, BAYA/BGFA/BGHA/BGRA/ BVGA-5/BVGA-6/BVGA-7/BYBA/B7WA/MFYA/MGHA/ MGSA/M7WA Linear Solenoid (Bolts To Side Of Case)(With 1 Solenoid) 1
30425A ..... Dual Solenoid, B7TA/B7VA/B7XA/B7ZA/M7ZA #425 1
40431A ..... Solenoids W/Housing, BYFA/B36A/MDKA/MDPA/MDRA/MJFA/P36A Linear (Pressure Control A & B) (2 Solenoids With Aluminum Housing) 2003-Up 1
203436-1A ..... Shim, RE0F09A Sensor To Bell Housing (.039"Thk)(.545"OD) (.260"ID) 2003-Up (Also Fits 20 Series Honda B7XA Only) (Also Fits RE0F10A(JF0111E) 2007-09)(Also Fits RE0F10D (JF016E) 2013-Up) 1
20436D ..... Sensor, BAYA On Case (3 Prong) With Chrome Tip 1
20436F ..... Sensor, B7TA/B7VA/B7XA/B7ZA/M7ZA On Case (2 Prong)(2.325" Long)(Also Fits BGFA/BVGA-5/BVGA-6/BVGA-7/B7TA/B7VA/B7XA/B7ZA/MGFA/MGHA/M7ZA On Rear Cover #438) 1
20437E ..... Sensor, BAYA/BGFA/BVGA-5/BVGA-6/BVGA-7/BGHA/BVLA/BYBA/B7WA/MAYA/MFYA/MGFA/ MGHA/MGSA/M7WA/PVGA/PVLA Temperature (15 1/2" Long) 2 Prong Connector 1
20438D ..... Sensor, BAYA/BGFA/BVGA-5/BVGA-6/BVGA-7/BYBA/B7WA/MFYA/MGFA/MGHA/MGSA/ M7WA Rear Cover (3 Prongs) (2.715" Long) (Also Fits BGFA/BVGA-5/BVGA-6/BVGA-7//BYBA /B7WA/MFYA/MGFA/MGHA/MGSA/M7WA # 436 On Case) 1
20438E ..... Sensor, BGFA/BVGA-5/BVGA-6/BVGA-7/B7TA/B7VA/B7XA/B7ZA/MGFA/MGHA/M7ZA Rear Cover (2 Prongs) (2.325" Long)(Use 20436F) 1
20439B ..... Switch, BAYA/BGFA/BVGA-5/BVGA-6/BVGA-7/BYBA/B7WA/MFYA/MGFA/MGHA/MJFA/M7WA (Beige Connector)(1 Prong)(The Lower One On The Rear Cover)(Also Fits BDKA/BYFA/MDKA /MDPA/MDRA Top (Front) Of Case) 1
20439C ..... Use 30411CA 1
20439E ..... Use 30411CA 1
20445BK ..... Repair Kit, Honda 4 & 5 Speed External On/Off Shift Solenoids 1997-Up 1
20445BAK ..... Repair Kit, Honda/Acura 4 & 5 Speed Pressure Switch Connector/Harness 1998-Up 1

PART #	MISC. COMPONENTS	QTY.	REFERENCE #

20493E ..... Dipstick, BAYA/BGFA/BVGA-5/BVGA-6/BVGA-7/BYBA/B7WA/MFYA/MGFA/MGHA/MGSA /M7WA (13 5/8" Long) 1
20493F ..... Dipstick, B7TA/B7VA/B7XA/B7ZA/M7ZA (14 7/8" Long) 1
20494E ..... Filler Tube, BAYA/BGFA/BVGA-5/BVGA-6/BVGA-7/BYBA/B7WA/MFYA/MGFA/MGHA/MGSA /M7WA (6 1/2" Long) 1
20494F ..... Filler Tube, B7TA/B7VA/B7XA/B7ZA/M7ZA (7 3/4" Long) 1
20496E ..... Cooler Line, BAYA/BGFA/BVGA-5/BVGA-6/BVGA-7/BYBA/B7WA/MFYA/MGFA/MGHA/MGSA /M7WA (Front Cooler Housing) (1 Bolt) (11" Long) 1
20496EA ..... Cooler Line, BAYA/BYBA/B7WA/MFYA/MGHA/MGSA/M7WA (Rear Cooler Housing) (1 Bolt) (11 1/4" Long) 1
20496EB ..... Oil Line, BAYA/BYBA/B7WA/MFYA/MGHA/MGSA/M7WA Case To Cooler Line Housing (2 Bolt) (8 1/4" Long) 1
20496N ..... Cooler Line, B7TA/M7ZA (Front Cooler Housing) (1 Bolt) (9 3/4" Long) 1
20496NA ..... Cooler Line, B7TA (Rear Cooler Housing) 2 Brackets (23" Long) 1

PART #	HARD PARTS	QTY.	REFERENCE #

20529E ..... Tube, BAYA/BGFA/BVGA-5/BVGA-6/BVGA-7/BYBA/B7TA/B7VA/B7WA/B7XA/B7ZA/MFYA/ MGFA/MGHA/MGSA/M7WA/M7ZA Stator (Cast # P7Z)(4.435" Long)(1.130"ID)(1.265"OD On End With Splines) 1
20529EA ..... Tube, BAYA/BGFA/BVGA-5/BVGA-6/BVGA-7/BYBA/B7TA/B7VA/B7WA/B7XA/B7ZA/MFYA/ MGFA/MGHA/MGSA/M7WA/M7ZA Stator (Cast # P7Z)(4.435" Long)(1.060"ID, 1.265"OD On End With Splines)(With 2 Lube Holes For #214 Bearing) 1
60530C ..... Pump Gear, BAYA/BYBA/B7TA/B7VA/B7WA/B7XA/B7ZA/MFYA/MGHA (38 Spline Gear) 28 Teeth (.470" Thick) 1
20550E ..... Drum, BAYA/BGFA/BVGA-5/BVGA-6/BVGA-7/BYBA/B7WA/MGFA/MGHA/M7WA 4th/5th Clutch (20 Teeth Steels) (2.795" Wide)(5.395"OD) (Also Fits B7TA/B7VA 3rd/4th Clutch) 1
20550F ..... Drum, B7XA/B7ZA/M7ZA 3rd/4th Clutch (24 Teeth Steels)(2.805" Wide) (5.150"OD)(Hub On The 4th Clutch Side Where #862 Snap Ring Rides Is Stepped From 1.855"OD To 1.690"OD) (Can Use 20550N)(Also MFYA/MGSA 4th/5th Clutch) 1
20550N ..... Drum, B7TA 3-4 Clutch (24 Teeth Steels) (2.805" Wide) (5.150"OD) The Hub On The 4th Clutch Side Where #862 Snap Ring Rides Is Not Stepped & Is 1.855"OD (Can Use 20550F) 1
20550P ..... Drum, BGRA 3-4 Clutch (20 Teeth Steels)(2.892" Wide)(5.390"OD) Hub On The 4th Clutch Side Where # 862 Snap Ring Rides Is Not Stepped And Is 1.855"OD 1
20552D ..... Drum, BAYA/B7WA/MGSA/M7WA 1st/2nd Clutch (Secondary Shaft)(20 Teeth/24 Teeth Steels) (5.425"OD On 2nd Clutch Side)(5.770"OD On Low Clutch Side) (4.060" Wide) 1
20552E ..... Drum, BGFA/BVGA-5/BVGA-6/BVGA-7/BYBA/MGHA 1st/2nd Clutch (20 Teeth/24 Teeth Steels) (5.425"OD On 2nd Clutch Side) (5.770"OD On 1st Clutch Side)(4.196" Wide)(Uses 20969E Piston) 1

© Whatever It Takes Transmission Parts. Inc.

PART #	HARDPARTS (Continued)	QTY.	REFERENCE #
20552EA	Drum, BGFA/BVGA-5/BVGA-6/BVGA-7/BYBA/MGHA 1st/2nd Clutch (20 Teeth/24Teeth Steels) (5.425”OD On 2nd Clutch Side)(5.770”OD On 1st Clutch Side)(4.196” Wide)(Uses 20969D Piston)	1	
20552F	Drum, B7XA/B7ZA/M7ZA 1st/2nd Clutch (Secondary Shaft) (24 Teeth Steels)(5.160”OD) (4.075” Wide)	1	
20552H	Drum, B7TA/B7VA 1st/2nd Clutch (Secondary Shaft) (20 Teeth Steels)(5.380”OD)	1	
20552X	Drum, MFYA 1st/2nd Clutch (Secondary Shaft)(20 Teeth Steels)(5.400”OD On 2nd Clutch Side) (5.770”OD On 1st Clutch Side) (4.060” Wide)	1	
20555D	Drum, BAYA/BGFA/B7WA/MGFA/MGSA/M7WA 3rd Clutch (5.205”OD)(24 Teeth Steels) (Uses 4.709”OD Piston)	1	
20555DK	Drum Assembly,BAYA/BGFA/B7WA/MGFA/MGSA/M7WA 3rd Clutch (5.205”OD)(24 Teeth Steels) (Contains: From #710 to #555)(Can Use 20555EK)	1	
20555E	Drum, BAYA/BVGA-5/BVGA-6/BVGA-7/BYBA/MAYA/MGHA 3rd Clutch (5.330”OD)(20 Teeth Steels)(Uses 4.709”OD Piston)	1	
20555EK	Drum Assembly, BAYA/BVGA-5/BVGA-6/BVGA-7/BYBA/MAYA/MGHA 3rd Clutch (5.330”OD) (20 Teeth Steels)(Contains: From #710 to #555)(Can Use 20555DK)	1	
20555EA	Drum, BAYA/BVGA-5/BVGA-6/BVGA-7/BYBA/MAYA/MGHA 3rd Clutch (5.330”OD)(20 Teeth Steels)(Uses 4.866”OD Piston)	1	
20555X	Drum, MFYA 3rd Clutch (5.150”OD)(24 Teeth Steels)	1	
20565D	Piston Kit, BAYA/BGFA/B7WA/MFYA/MGFA/MGSA/M7WA 3rd Clutch (4.708”OD Piston)	1	
20565E	Piston Kit, BVGA-5/BVGA-6/BVGA-7/BYBA/MGHA 3rd Clutch (4.865”OD Piston)	1	
20574E	Hub, BAYA/BGFA/BVGA-5/BVGA-6/BVGA-7/BYBA/B7WA/MFYA/MGFA/MGHA/MGSA/M7WA Low Clutch (W/Outer Sprag Race) (Secondary Shaft)	1	
20577E	Hub, BAYA/BGFA/BVGA-5/BVGA-6/BVGA-7/BYBA/B7WA/MFYA/MGFA/MGHA/MGSA/M7WA Low/Hold Clutch (Secondary Shaft)	1	
20654E	Sprag, BAYA/BGFA/BVGA-5/BVGA-6/BVGA-7/BYBA/B7WA/MFYA/MGFA/MGHA/MGSA/M7WA Low (Secondary Shaft)(26 Elements)(Can Use 74658 Without The Brass Caps)	1	
74658	Sprag, BAYA/BYBA/B7WA/MFYA/MGHA/MGSA/M7WA Low (Secondary Shaft)(26 Elements)	1	
20672E	Mainshaft, BAYA/BGFA/BVGA-5/BVGA-6/BVGA-7/BYBA/B7WA/MFYA/MGFA/MGHA/MGSA/ M7WA (15 3/4” Long)(.770” Wide Race For # 220) (0.134” Thick Flange)(.775” Wide Bearing #214)(Has No ID Grooves Or 2 ID Grooves On Shaft)	1	
20672EA	Mainshaft, BAYA/BGFA/BVGA-5/BVGA-6/BVGA-7/BYBA/B7WA/MFYA/MGFA/MGHA/MGSA /M7WA (15 3/4” Long)(.770” Wide Race For #220)(.134” Thick Flange)(.820” Wide Bearing #214)(One ID Groove On Shaft)	1	
20672F	Mainshaft, B7TA/B7VA/B7XA/B7ZA/M7ZA (15 3/4” Long) (.650” Wide Race For # 220) (0.134” Thick Flange)	1	
20675E	Shaft, BAYA/BGFA/BVGA-5/BVGA-6/BVGA-7/BYBA/B7WA/MFYA/MGFA/MGHA/MGSA/M7WA Secondary (12” Long)(.190” Thick Flange) (Uses 3 Teflon Rings & 4 Rubber Rings)	1	
20675F	Shaft, B7ZA/M7ZA/B7XA (Some) Secondary (11 5/8” Long)(.580” Thick Flange)(2 Teflon & 3 Rubber Rings)(Flange Is 7 5/8” From Threaded End)(The Metal Orifice Cup Plug Inside Front Has Cast # P7T)	1	
20675FA	Shaft, B7XA (Some) Secondary (11 5/8” Long) (.580” Thick Flange) (2 Teflon & 3 Rubber Rings) (Flange Is 7 5/8” From Threaded End) (The Metal Orifice Cup Plug Inside Front Has Cast # PY4)	1	
20675H	Shaft, B7TA/B7VA Secondary (11 5/8” Long) .225” Thick Flange (2 Teflon & 3 Rubber Rings) (Flange Is 8” From Threaded End) The Metal Orifice Cup Plug Inside Front Has Cast # P7T	1	
20676D	Countershaft, BYBA (15 Teeth, 2 Groove)(13 9/16” Long) With 8 Sets of Splines	1	
20676DA	Countershaft, BYBA (15 Teeth, 1 Groove) (13 9/16” Long) (With 8 Sets Of Splines)	1	
20676E	Countershaft, BAYA/ B7WA/MGHA/MGSA (14 Teeth) (1 Groove) (13 9/16” Long) (With 8 Sets Of Splines)	1	
20676F	Countershaft, B7VA/B7XA/B7ZA/M7ZA (15 Teeth) (12 7/16” Long) (7 Sets Of Splines)	1	
20676N	Countershaft, B7TA (17 Teeth) 12 7/16” Long (7 Sets Of Splines)	1	
20676P	Countershaft, BVGA-5/BVGA-6/BVGA-7 (14 Teeth)(3 Groove)(13 9/16”Long)(With 8 Sets Of Splines)	1	
20676Q	Countershaft, BGFA/MGFA/M7WA (14 Teeth)(No Groove) (13 9/16” Long)(With 8 Sets Of Splines)(Has 2 Grooves For 2 Sets Of #877)	1	
20676QA	Countershaft, M7WA (14 Teeth, No Groove)(13 9/16” Long) With 8 Sets Of Splines (Has Only 1 Groove For 1 Set Of # 877)	1	
20676X	Countershaft, MFYA (15 Teeth, 1 Groove) (13 9/16” Long) With 8 Sets Of Splines	1	
30689A	Oil Plate, BAYA/BGFA/BVGA-5/BVGA-6/BVGA-7/B7WA/MFYA/MGFA/MGHA/MGSA/M7WA Secondary Shaft To Bell Housing	1	
30689B	Oil Plate,BAYA/BGFA/BVGA-5/BVGA-6/BVGA-7/BYBA/B7TA/B7VA/B7WA/B7XA/B7ZA/MFYA/ MGFA/MGHA/MGSA/M7WA/M7ZA Countershaft To Bell Housing (2.626”OD)(Tin)	1	
30689BC	Oil Plate, B7TA/B7VA/B7XA/B7ZA/M7ZA Secondary Shaft To Bell Housing (Tin) (1.795”OD) (P6H Stamped)	1	
20690E	Park Gear, BAYA/BGFA/BVGA-5/BVGA-6/BVGA-7/BYBA/B7TA/B7VA/B7WA/B7XA/B7ZA/MFYA /MGFA/MGHA/MGSA/M7WA/M7ZA (16 Lugs) (4.722”OD)(1.300” Thick Through Center)	1	

© Whatever It Takes Transmission Parts. Inc.

20690P	Park Gear, BDGA-6/BDGA-7/BDGA-8/BVGA-5/BVGA-6/BVGA-7 (16 Lugs)(4.722"OD) (1.260" Thick Through Center)	1
20699H	Oil Deflector, B7TA/B7VA Drive Gear (Mainshaft) 2 Bolt Tin (3.475"OD)	1
20708E	Gear, BGFA/BGVA-5/BVGA-6/BVGA-7/MGHA Transfer (AWD) (29 Teeth, No Groove)	1
20710E	Gear, BGFA/BYBA/B7WA/MFYA/MGFA/MGHA/MGSA/M7WA Driven Transfer (47 Teeth) (No Groove) (With 3rd Clutch Hub)	1
20710EK	Gear Set, BGFA/BYBA/B7WA/MFYA/MGFA/MGHA/MGSA/M7WA Transfer (3 Gear Set) (No Groove)(46 Teeth Mainshaft) (47 Teeth Countershaft With 3rd Clutch Hub)(61 Teeth Secondary Shaft)	1
20710EAK	Gear Set, BAYA/BVGA-5/BVGA-6/BVGA-7/B7WA Transfer (3 Gear Set)(1 Groove)(46 Teeth Mainshaft)(47 Teeth Countershaft With 3rd Clutch Hub)(61 Teeth Secondary Shaft)	1
20710FK	Gear Set, B7XA/B7ZA/M7ZA Transfer (3 Gear Set) (45 Teeth Mainshaft) (48 Teeth Countershaft) (59 Teeth Secondary Shaft)	1
20710HK	Gear Set, B7TA/B7VA Transfer (3 Gear Set) (45 Teeth Mainshaft) (48 Teeth Countershaft) (59 Teeth Secondary Shaft) (With 2 Bolt Oil Shield # 699 On The Mainshaft Gear)	1
20715B	Differential Assembly, BAYA (62 Teeth, 3 Groove)(12 Bolt)(No Speed-O)	1
20715D	Differential Assembly, BAYA/MGSA (62 Teeth, 2 Groove) (10 Bolt) (No Speed-O)	1
20715DA	Differential Assembly, BYBA (63 Teeth, 4 Groove) (12 Bolt) (No Speed-O)	1
20715DD	Differential Assembly, BYBA (63 Teeth, 1 Groove) (12 Bolt) (No Speed-O) (Has A 20 Teeth And 24 Teeth Cone Bearings)	1
20715E	Differential Assembly, MGHA (62 Teeth, 3 Groove) (57 Teeth Transfer Gear, No Groove) (12 Bolt) All Wheel Drive	1
20715EA	Differential Assembly, BVGA-5/BVGA-6/BVGA-7/MGHA (62 Teeth Ring Gear, No Groove) (54 Teeth Transfer Gear, No Groove)(12 Bolt)(AWD)	1
20715F	Differential Assembly, B7XA/B7ZA/MFYA/M7ZA (63 Teeth, 1 Groove) (10 Bolt) (Has A 10 Teeth & 21 Teeth Cone Bearings) (With Speed-O Gear)	1
20715FA	Differential Assembly, B7ZA / B7XA (63 Teeth, 1 Groove) (10 Bolt) Has A 20 Teeth & 24 Teeth Cone Bearings	1
20715FB	Differential Assembly, B7XA/B7ZA/MFYA (63 Teeth, 1 Groove) (10 Bolt) Has A 20 Teeth & 21 Teeth Cone Bearings (No Speed-O Gear)(Bearing #292 Rollers Are .450" Long)(The Nose Where #292 Bearing Sets Has No Notches, It Is Smooth On The End)	1
20715FC	Differential Assembly, B7XA/B7ZA/MFYA (63 Teeth, 1 Groove)(10 Bolt)(Has A 20 Teeth & 21 Teeth Cone Bearings)(No Speed-O Gear)(Bearing #292 Rollers Are .400" Long)(The Nose Where #292 Bearing Sets Has 2 Notches)	1
20715G	Differential Assembly, B7XA(Some) (63 Teeth, 1 Groove)(10 Bolt)(Has A 20 Teeth & 21 Teeth Cone Bearing)(No Speed-O Gear)(Bearing # 292 Rollers Are .400" Long)(The Nose Where #292 Bearing Sets Has No Notches, It Is Smooth On The End)	1
20715H	Differential Assembly, B7VA (63 Teeth)(1 Groove)(12 Bolt)	1
20715HC	Differential Assembly, B7VA (63 Teeth)(4 Groove)(12 Bolt)	1
20715N	Differential Assembly, B7TA (67 Teeth)(2 Groove)(12 Bolt)(26 Teeth Speed-O Hole)	1
20715Q	Differential Assembly, B7WA/MGFA/M7WA (62 Teeth, 2 Groove)(12 Bolt)(23 Teeth Speed-O Gear)	1
20715R	Differential Assembly, BGFA (62 Teeth, 2 Groove)(12 Bolt)(No Speed-O Gear)	1
20740E	Valve Body, BAYA/BGFA/BGHA/BVGA-5/BVGA-6/BVGA-7/BYBA/B7WA/MFYA/MGFA/MGHA/ MGSA/M7WA (Less Gears)(Cast # P7W)	1
20740F	Valve Body, B7XA/B7ZA/M7ZA (Less Gears)(Cast #P7Z)	1
20740H	Valve Body, B7TA/B7VA (Less Gears)(Cast #P7T)	1
20740P	Valve Body, BGRA (Less Gears)(Cast # RGR)(Customers Must Use Their Manual Valve)	1

PART #	VALVE BODY COMPONENTS	QTY.	REFERENCE #
S30741ADK	Valve With End Plug, BAYA/BDGA-6/BDGA-7/BDGA-8/BGFA/BGHA/BGRA-5/BGRA-6/BGRA-7 /BVGA/BYBA/B7TA/B7VA/B7WA/B7XA/B7YA/B7ZA/MAYA/MFYA/MGFA/MGHA/MGSA/M7WA/ M7ZA/PVGA Clutch Pressure Control (Must Use Reamer # T-F-98892-TL23)(Sonnax)	1	
T-F-98892-TL23	Reamer For S30741ADK	1	
S30741AP-1	Valve, BAYA/BDGA-6/BDGA-7/BDGA-8/BGFA/BGHA/BGRA/BVGA-5/BVGA-6/BVGA-7/BYBA/ B7TA/B7VA/B7WA/B7XA/B7YA/B7ZA/MAYA/MFYA/MGFA/MGHA/MGSA/M7WA/M7ZA/PVGA Pressure Regulator (Lube Regulated)(Sonnax)	1	
S30741BPK	Valve Kit, BAYA/BDGA-6/BDGA-7/BDGA-8/BGFA/BGHA/BGRA/BVGA-5/BVGA-6/BVGA-7/ BYBA/B7TA/B7VA/B7WA/B7XA/B7YA/B7ZA/MAYA/MFYA/MGFA/MGHA/MGSA/M7WA/M7ZA/ PVGA Pressure Regulator (Oversize)(Contains: Valve & Two Springs)(Sonnax) (Must Use T-F-98892-TL13)	1	
T-F-98892-TL13	Reamer Kit For S30741BPK (Contains: Reamer, Jig & Guide Pin)(Sonnax)	1	
S30741C-6	End Plug With O-Ring, BAYA/BYBA/B7TA/B7VA/B7WA/B7XA/B7ZA/MFYA/MGHA/MGSA/M7WA (14mm Plug) (Fits All 4 Speeds With Dual Linear Solenoids)(Sonnax)	1	98892-02
S30741C-6K	End Plug Kit, BAYA/BYBA/B7TA/B7VA/B7WA/B7XA/B7ZA/MFYA/MGHA/MGSA/M7WA (Contains: Three 12mm & One 15mm End Plugs Without O-Rings And One 14mm End Plug With O-Rings)(Fits All 4 Speeds With Dual Linear Solenoids)(Sonnax)	1	98892-01K
20741E-1	Manual Valve, BAYA/BGFA/BVGA-5/BVGA-6/BVGA-7/BYBA/B7WA/MFYA/MGFA/MGHA/MGSA/ M7WA (8 1/16" Long)	1	

© Whatever It Takes Transmission Parts. Inc.

PART #	VALVE BODY COMPONENTS (Continued)	QTY.	REFERENCE #
S20741EAK	Valve Kit, BAYA/BDGA-6/BDGA-7/BDGA-8/BGFA/BGHA/BGRA/BVGA-5/BVGA-6/BVGA-7/BYBA/B7WA.MAYA/MGFA/MGHA/M7WA/PGRA/PVGA Lock-Up Shift (Contains: Valve, O-Ringed End Plug & 2 O-Rings)	1	
S20741EBK	Valve Kit, BAYA/BDGA-6/BDGA-7/BDGA-8/BGFA/BGHA/BGRA/BVGA-5/BVGA-6/BVGA-7/BYBA/B7WA/MAYA/MGFA/MGHA/M7WA/PGRA/PVGA Lock-up Shift (Oversize)(Contains: Valve, Sleeve, And O-Ringed End Plug)(MustUse T-F-98892-TL27)	1	
T-F-98892-TL27	Tool For S20741EBK	1	
20741EC-1	Valve & Spring, MGHA / B7VA / B7XA / B7ZA Converter Check Valve	1	
S20741ECK	Valve Kit, B7TA/B7VA/B7WA/B7XA/B7YA/B7ZA TCC Check (Also Fits BAYA/BDGA-6/BDGA-7/BDGA-8/BGHA/BGRA/BVGA-5/BVGA-6/BVGA-7/BYBA/M7WA/M7ZA/MAYA/MGFA/MGHA/PGRA 1999-05 (OE Style No O-Ring)(Sonnax)	1	
S20741ECAK	Valve Kit, B7TA/B7VA/B7WA/B7XA/B7YA/B7ZA TCC Check (Also Fits BAYA/BDGA-6/BDGA-7/BDGA-8/BGHA/BGRA/BVGA-5/BVA-6/BVGA-7/BYBA/M7WA/M7ZA/MAYA/MGFA/MGHA/PGRA 1999-05 (O-Ring Style)(Sonnax)	1	
A20741ELK	Lube Kit, B7TA/B7VA/B7WA/BYBA/M7WA (Corrects Overheating) B7YA/B7ZA/MAYA/MGFA/MGHA/M7WA/M7ZA/PVGA (Corrects Overheating Converter)(Fixes Up To 6 Transmissions)	1	
A20741ELK	Valve Kit, B7TA/B7VA/B7XA/B7YA/B7ZA/M7ZA Oversized Lock-Up Control Valve, Sleeve, & O-Ring End Plug (Sonnax)(Must Use T-F-98892-TL17)	1	
T-F-98892-TL17	Tool For S20741ELK	1	
20741F-1	Manual Valve, B7TA/B7VA/B7XA/B7ZA/M7ZA (8 5/16" Long)	1	
S30741L-6	End Plug, BAYA/BYBA/B7TA/B7VA/B7WA/B7XA/B7ZA/MFYA/MGHA/MGSA/M7WA (15mm) Lock-Up Control & Shift Valve D (Does Not Use An O-Ring) (Fits All 4 Speeds With Dual Linear Solenoids)(Sonnax)	1	
S30741S-6	End Plug With O-Ring, BAYA/BYBA/B7TA/B7VA/B7WA/B7XA/B7ZA/MFYA/MGHA/MGSA/M7WA (Fits All 4 Speeds With Dual Linear Solenoids) (Sonnax)	1	98892-01
20747E	Plate, BYBA/BGHA/MGHA Valve Body 2001-04	1	
20747F	Plate, B7XA/B7ZA/M7ZA Valve Body	1	
20747H	Plate, B7TA/B7VA Valve Body	1	
20747P	Plate, BGRA Valve Body 2005-06	1	
20747Q	Plate, B7WA/M7WA Valve Body 2000-03 (Also Fits BGFA 2001-02)	1	

PART #	HARDPARTS (Continued)	QTY.	REFERENCE #
20750D	Bell Housing, BAYA/BGFA/BGRA/BYBA/B7WA/M7WA (17 Bolts To Case) No Speed-O Hole (Uses 4 Single Solenoids)(Cast # P7W)	1	
20750E	Bell Housing, BVGA-5/BVGA-6/BVGA-7/MGHA (19 Bolts To Case) With Speed-O Hole (Uses 4 Single Solenoids)	1	
20750F	Bell Housing, B7ZA (17 Bolts To Case) No Speed-O Hole (Uses 2 Single & 1 Dual Solenoid) Has 3 Threaded Holes On The Side By The Starter	1	
20750FA	Bell Housing, M7ZA (17 Bolts To Case)(With Speed-O Hole)(Uses 2 Single & 1 Dual Solenoid) (Has 3 Threaded Holes On The Side By The Starter)(Cast # P7Z)	1	
20750G	Bell Housing, B7XA (17 Bolts To Case) No Speed-O Hole (Uses 2 Single & 1 Dual Solenoid) Has 1 Threaded Hole On The Side By The Starter (Cast # P7X & 805)	1	
20750GA	Bell Housing, B7TA (Some) / B7XA (17 Bolts To Case) No Speed-O Hole (Uses 2 Single & 1 Dual Solenoid) Has 1 Threaded Hole On The Side By The Starter (Cast # P7T)	1	
20750GAA	Bell Housing, B7TA (Some) (17 Bolts To Case)(With Speed-O Hole)(Uses 2 Single & 1 Dual Solenoid) (Has 1 Threaded Hole On The Side By The Starter) (Cast # P7T)	1	
20750GB	Bell Housing, B7XA (17 Bolts To Case) No Speed-O Hole (Uses 2 Single & 1 Dual Solenoid) Has 1 Threaded Hole On The Side By The Starter (Cast # P7Z & 392)	1	
20750H	Bell Housing, B7VA (17 Bolts To Case) With Speed-O Hole (Uses 2 Single & 1 Dual Solenoid)	1	
20750J	Bell Hosing, BGHA (18 Bolts To Case)(No Speed-O Hole)(Cast # RGR)	1	
20750P	Bell Housing, BVGA-5/BVGA-6/BVGA-7 (20 Bolts To Case)(No Speed-O Hole)(Uses 4 Single Solenoids)(Cast # PVG)	1	
20750Q	Bell Housing, BGFA/B7WA/MFYA/MGFA/MGSA/M7WA (17 Bolts To Case)(With Speed-O Hole) (Uses 4 Single Solenoids)(Cast # P7W)	1	
20750X	Bell Housing, MFYA/MGSA (17 Bolts To Case)(With Speed-O Hole)(Uses 4 Single Solenoids) (Cast # P7W)(Use 20750Q)	1	
20757E	Housing, BAYA/BGFA/BGHA/BGRA/BVGA-5/BVGA-6/BVGA-7/BYBA/B7WA/MFYA/MGHA/MGSA/M7WA Linear Solenoid (Bolts To Side Of Case)(With 1 Solenoid)	1	
20759E	Rear Cover, BGFA/BVGA-5/BVGA-6/BVGA-7/BYBA/B7WA/MFYA/MGFA/MGHA/MGSA/M7WA (16 Bolt) (Uses 1 Push-In & 2 Screw-In Sensors)(Has Linkage Seal)	1	
20759EA	Rear Cover, BAYA (Cast # RAY)(16 Bolt)(Uses 1 Push-In & 2 Screw-In Sensors)(Has Linkage Seal)	1	
20759F	Rear Cover, B7ZA/M7ZA (16 Bolt)(Uses 1 Push-In & 1 Screw-In Sensor)(No Linkage Seal)	1	
20759G	Rear Cover, B7XA (16 Bolt) Uses 1 Push-In & 1 Screw-In Sensor (Has Linkage Seal) (2 Long Ports)(No Oil Slinger Tube)	1	
20759GA	Rear Cover, B7TA/B7VAB7XA (16 Bolt)(Uses 1 Push In And 1 Screw In Sensor)(Has Linkage Seal)(1 Large Port & 1 Small Port)(Has Oil Slinger Tube)	1	

© Whatever It Takes Transmission Parts. Inc.

30760BA.....Case, B6VA/BAXA/M6HA (16 Bolts To Bell)(Has 1 Large Port In Rear Cover Gasket, ...Going To The Case Vent) 2000 Only (These Cases Are Sleeved).....1 .....

20760C .....Case, M7ZA (17 Bolts To Case) (16 Bolt Rear Cover) (With 2 Long Vent Ports To Rear Cover) .....(Cast # P7Z)(Uses A 3.000"OD Bearing Race # 288).....1 .....

20760E .....Case, MGHA(Some) (19 Bolts To Bell)(16 Bolt Rear Cover)(Cast # PGH).....1 .....

20760F .....Case, B7ZA (17 Bolts To Bell) 16 Bolt Rear Cover (With 2 Long Vent Ports To Rear Cover) .....Can Use 20760G No Threaded Bosses On Lower Case.....1 .....

20760G.....Case, B7TA/B7XA/M7ZA (17 Bolts To Bell)(16 Bolt Rear Cover)(With 2 Long Vent Ports To Rear .....Cover)(With 2 Threaded Bosses On Lower Part Of Case)(Uses A 3.00"OD Differential Bearing .....Race # 288).....1 .....

20760GA.....Case, B7TA/B7XA(17 Bolts To Bell) 16 Bolt Rear Cover (Cast # P7T On Back Left Of Case) .....(Uses A 3.188"OD Differential Bearing Race # 288).....1 .....

20760H.....Case, B7VA (17 Bolts To Bell) 16 Bolt Rear Cover (With 1 Long & 1 Short Vent Port To Rear .....Cover) With 2 Threaded Bosses On Lower Part Of Case.....1 .....

For All Other Cases, Please Refer To The Following Picture And Chart To Determine The Correct Case For The Following Transmissions:

BAYA/BDGA/BGFA/BGHA/BGRA/BVGA/BYBA/B7WA/MGFA/MGSA/M7WA

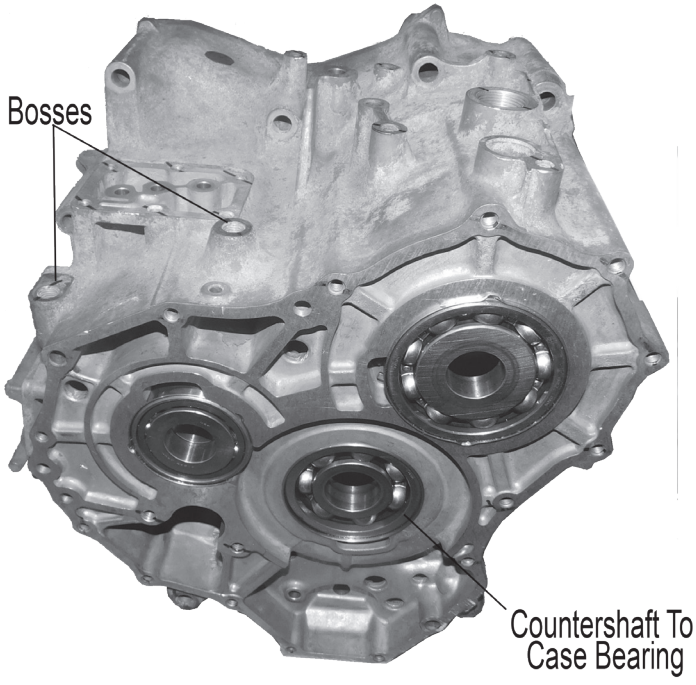

Part #	FWD/AWD	Bolts To Bell	Boss By Vent	Countershaft To Case Brg		Diff To Case Brg	Notes
U20760D	FWD	17	Yes	2.953"OD			
U20760DA	FWD	17	No	2.953"OD			Bolt On External Filter Bracket
U20760DB	FWD	17	No	3.188"OD			
U20760DC	FWD	17	Yes	3.188"OD	.844"Thick	3.188"OD	
U20760DCA	FWD	17	Yes	3.188"OD	.844"Thick	3.340"OD	
U20760DCB	FWD	17	Yes	3.188"OD	1.002"Thick	3.340"OD	
U20760J	FWD	18	Yes	3.188"OD	1.002"Thick	3.340"OD	
U20760JA	FWD	18	Yes	3.188"OD	.844"Thick	3.340"OD	
U20760Q	FWD	17	No	2.953"OD			Screw On Filter Bracket Is Made On Case
U20760P	AWD	20	No	2.953"OD			
U20760PA	AWD	20	No	3.188"OD	.844"Thick	3.340"OD	
U20760PB	AWD	20	No	3.188"OD	1.002"Thick	3.340"OD	
U20760PC	AWD	20	No	3.188"OD	.844"Thick	3.188"OD	

© Whatever It Takes Transmission Parts. Inc.

PART #	HARD PARTS (Continued)	QTY.	REFERENCE #
20769D	Housing, BYBA/B7WA/MGSA (For Screw-On Filter) (3 Bolts) (Has An External Cooler That Bolts To This Housing)	1	
20769DA	Housing, BAYA (For Screw-On Filter) (3 Bolts) Does Not Have An External Cooler That Bolts To This Housing	1	
20769E	Housing, BGFA/BVGA-5/BVGA-6/BVGA-7/MGFA/MGHA (For Screw-On Filter) (4 Bolts)	1	
20769P	Housing, BGRA & Others (Cartride Style Filter)(3 Bolts) (Has External Cooler That Bolts To This Housing)	1	
20776EK	Bolt Set, MGHA Case To Bell (19 Pieces)	1	
20776FK	Bolt Set, B7ZA / B7VA / B7XA Case To Bell (17 Pieces)	1	
20791EK	Bolt Set, BAYA/BGFA/BVGA-5/BVGA-6/BVGA-7/BYBA/B7WA/MFYA/MGFA/MGHA/MGSA/M7WA Accumulator Body (16 Pieces)	1	
20791FK	Bolt Set, B7TA/B7VA/B7XA/B7ZA/M7ZA Accumulator Body (15 Pieces)	1	
20792EK	Bolt Set, BAYA/BGFA/BVGA-5/BVGA-6/BVGA-7/BYBA/B7WA/MFYA/MGFA/MGHA/MGSA/M7WA Accumulator Cover (7 Pieces)	1	
20792FK	Bolt Set, B7TA/B7VA/B7XA/B7ZA/M7ZA Accumulator Cover (6 Pieces)	1	
80795	Nut, MGHA (Some) (Countershaft & Secondary Shaft) Left Hand Thread (.435” Thick)	1-2	
20795A	Nut, BAYA/BYBA/B7TA/B7VA/B7WA/B7XA/B7ZA/MFYA/MGHA/MGSA/MPZA/M7WA (Mainshaft) Right Hand Thread	1	
20796A	Nut, BAYA/BYBA/B7TA/B7VA/B7WA/B7XA/B7ZA/MFYA/MGHA/MGSA/MPZA/M7WA (Countershaft) Left Hand Thread (.713” Thick)(Also BAYA/BYBA/B7TA/B7VA/B7WA/B7XA/B7ZA/MFYA/MGHA/MGSA/MPZA/M7WA (Secondary Shaft)	1-2	
20801E	Gear, BGFA/BVGA-5/BVGA-6/BVGA-7/B7VA/B7WA/B7XA/B7ZA/MFYA/MGFA/MGHA/MGSA/M7WA/M7ZA 1st (Countershaft)(58 Teeth, No Groove on Teeth, 2 Groove On The Side) (.750” Thick At Teeth)(1.080” Thick Through Center)(5.710”OD)	1	
20801EA	Gear, BGFA/BVGA-5/BVGA-6/BVGA-7/B7VA/B7WA/B7XA/B7ZA/MFYA/MGFA/MGHA/MGSA/M7WA/M7ZA 1st (Countershaft)(58 Teeth, No Groove On Teeth, No Gorrve On Side) (.750” Thick At Teeth)(1.080” Thick Through Center)(5.710”OD)	1	
20801N	Gear, B7TA 1st (Countershaft) 50 Teeth, No Groove (5.710”OD) (.743” Thick)	1	
20802D	Gear, BVGA-5/BVGA-6/BVGA-7/BYBA/B7WA(Some) Low (Secondary Shaft)(30 Teeth, 1 Groove At The Edge On The Opposite Side Of The Sprag)(2.175” Tall)	1	
20802DK	Gear/Sprag Kit, BVGA-5/BVGA-6/BVGA-7/BYBA/B7WA (Some) Low (Secondary Shaft) (30 Teeth, 1 Groove At The Edge On The Opposite Side Of The Sprag)(With 26 Lug Sprag)	1	
20802DAK	Gear/Sprag Kit, BVGA-5/BVGA-6/BVGA-7/BYBA/B7WA(Some) Low (Secondary Shaft) (30 Teeth, 1 Groove In The Center)(With 26 Lug Sprag)	1	
20802E	Gear, BAYA/BGFA/MFYA/MGFA/MGHA MGSA/M7WA/B7WA(Some) Low (Secondary Shaft) (30 Teeth, 1 Groove At The Edge On The Side Of The Sprag)(2.175” Tall)	1	
20802EK	Gear/Sprag Kit, BAYA/BGFA/MFYA/MGFA/MGHA/MGSA/M7WA/B7WA(Some) Low (Secondary Shaft)(30 Teeth, 1 Groove At The Edge On The Side Of The Sprag))(2.175” Tall) (With 26 Lug Sprag)	1	
20802EA	Gear, BAYA/B7WA(Some)/MFYA/MGHA/MGSA/M7WA(Some) Low (Secondary Shaft) (30 Teeth, No Groove)	1	
20802EAK	Gear/Sprag Kit, BAYA/B7WA(Some)/MFYA/MGHA/MGSA/M7WA(Some) Low (Secondary Shaft) (30 Teeth, No Groove)(With 26 Lug Sprag)(Contains: # 802,296,574,654,294,297,885,577)	1	
20802F	Gear, B7XA/B7ZA/M7ZA 1st (Secondary Shaft)(30 Teeth, No Groove)(2.900” Tall)	1	
20802H	Gear, B7VA 1st (Secondary Shaft) 30 Teeth, No Groove (3.040” Tall)	1	
20802N	Gear, B7TA 1st (Secondary Shaft) 27 Teeth, 1 Groove (3.040” Tall)	1	
20802QK	Gear/Sprag Kit, BDGA-6/BDGA-7/BDGA-8 Low (Secondary Shaft)(30 Teeth, 2 Groove) (With 26 Lug Sprag)	1	
20803D	Gear, BAYA/B7WA(Some)/MFYA/MGFA/M7WA 2nd (Secondary Shaft)(41 Teeth, No Groove) (4.130”OD)(30 Teeth Clutch Hub)	1	
20803E	Gear, BGFA/BVGA-5/BVGA-6/BVGA-7/BYBA/MGHA 2nd (Secondary Shaft)(41 Teeth, 2 Groove) (4.130”OD)(30 Teeth Clutch Hub)	1	
20803EA	Gear, BYBA/MGHA 2nd (Secondary Shaft)(41 Teeth, 1 Groove)(4.130”OD)(30 Teeth Clutch Hub)	1	
20803F	Gear, B7ZA 2nd (Secondary Shaft) 41 Teeth (No Groove) (4.185”OD)	1	
20803G	Gear, B7XA/B7VA/M7ZA 2nd (Secondary Shaft)(41 Teeth, 1 Groove)(4.185”OD) (2.769” Tall) (44 Teeth Clutch Hub)	1	
20803GA	Gear, B7XA / B7VA 2nd (Secondary Shaft)(41 Teeth, 1 Groove)(4.185”OD) (2.900” Tall) (44 Teeth Clutch Hub)	1	
20803N	Gear, B7TA 2nd (Secondary Shaft) 42 Teeth (2 Groove) 4.385”OD	1	
20803Q	Gear, B7WA(Some) 2nd (Secondary Shaft)(41 Teeth, 3 Groove)(4.130”OD)(30 Teeth Clutch Hub)	1	
20803X	Gear, MGSA 2nd (Secondary Shaft) 42 Teeth (1 Groove) 4.280”OD	1	
20804E	Gear, BAYA/BGFA/BVGA-5/BVGA-6/BVGA-7/BYBA/B7WA(Some)/MFYA/MGFA/MGHA/M7WA 2nd (Countershaft) (48 Teeth, 2 Groove)(4.780”OD)	1	
20804EA	Gear, B7WA (Some) 2nd (Countershaft)(48 Teeth, No Groove)	1	
20804F	Gear, B7ZA 2nd (Countershaft) 47 Teeth (1 Groove) (4.750”OD) Left Angle (.747” Thick)	1	

© Whatever It Takes Transmission Parts. Inc.

20804G.....Gear, B7VA/B7XA/M7ZA 2nd (Countershaft)(47 Teeth, 1 Groove) (4.750”OD)(Left Angle) .....(.708” Thick).....1
20804N.....Gear. B7TA 2nd (Countershaft) 44 Teeth (No Groove) 4.580”OD (Left Angle) (.712” Thick).....1
20804X.....Gear, MFYA 2nd (Countershaft) (46 Teeth, 3 Groove).....1
20806F.....Gear, B7VA/B7XA/B7ZA/M7ZA 3rd (Mainshaft)(38 Teeth, 1 Groove) (3.985”OD).....1
20806N.....Gear, B7TA 3rd (Mainshaft) 43 Teeth, 2 Groove (4.090”OD).....1
20807F.....Gear, B7XA/B7ZA/M7ZA 3rd (Countershaft)(36 Teeth, 1 Groove)(.710” Thick)(3.800”OD).....1
20807H.....Gear, B7VA 3rd (Countershaft) 36 Teeth (2 Groove) Left Angle (3.800”OD) (.702” Thick).....1
20807N.....Gear, B7TA 3rd (Countershaft) 38 Teeth (2 Groove) Left Angle (3.650”OD) (.712” Thick).....1
20809EA.....Gear, BAYA/BGFA/BYBA/MGHA 4th (Mainshaft)(44 Teeth, 2 Groove) (4.441”OD).....1
20809F.....Gear, B7XA/B7ZA/M7ZA 4th (Mainshaft)(46 Teeth, 1 Groove) (4.760”OD).....1
20809H.....Gear, B7VA 4th (Mainshaft) 46 Teeth (2 Groove) (4.760”OD) 26 Teeth On Small Gear.....1
20809N.....Gear, B7TA 4th (Mainshaft) 48 Teeth (2 Groove) (4.810”OD) 26 Teeth No Groove On Small .....Gear.....1
20809Q.....Gear, BVGA-5/BVGA-6/BVGA-7/B7WA/MGFA/M7WA 4th (Mainshaft)(49 Teeth, No Groove) .....(4.615”OD).....1
20809X.....Gear, MFYA/MGSA 4th (Mainshaft) (43 Teeth, 1 Groove) (4.345”OD).....1
20810EA.....Gear, BAYA/BVGA-5/BVGA-6/BVGA-7/BYBA/MGHA 4th (Countershaft)(32 Teeth, 2 Groove) .....(.702” Thick)(3.320”OD).....1
20810F.....Gear, B7VA/B7XA/B7ZA/M7ZA 4th (Countershaft)(28 Teeth, 1 Groove)(3.020”OD) .....(1.615”ID).....1
20810N.....Gear, B7TA 4th (Countershaft) 28 Teeth (2 Groove) Pointed Teeth (2.945”OD) 1.615”ID .....(1.022” Thick).....1
20810Q.....Gear, BGFA/B7WA/MGFA/M7WA 4th (Countershaft)(32 Teeth, No Groove)(.702” Thick) .....(3.125”OD).....1
20810X.....Gear, MFYA/MGSA 4th (Countershaft) (33 Teeth, 1 Groove) (3.415”OD)(.702” Thick Gear).....1
20812E.....Gear, BAYA/BVGA-5/BVGA-6/BVGA-7/BYBA/MGHA 5th (Mainshaft)(50 Teeth, 2 Groove, ...Both Toward Clutch Side)(5.000”OD)(3.110” Tall).....1
20812EA.....Gear, BAYA/BVGA-5/BVGA-6/BVGA-7/BYBA/MGHA 5th (Mainshaft)(50 Teeth, 2 Groove, ...1 On Reverse Side & 1 On Clutch Side)(.500” Tall)(3.180”Tall).....1
20812Q.....Gear, BGFA/B7WA/MGFA/M7WA 5th (Mainshaft)(51 Teeth, No Groove)(5.160”OD).....1
20812X.....Gear, MFYA/MGSA 5th (Mainshaft)(49 Teeth, 3 Groove)(4.910”OD).....1
20813E.....Gear, BVGA-5/BVGA-6/BVGA-7/BYBA/MGHA 5th (Countershaft)(26 Teeth, 2 Groove) .....(2.765”OD)(1.615”ID).....1
20813EA.....Gear, BAYA 5th (Countershift)(26 Teeth, 3 Groove)(2.750”OD)(1.615”ID).....1
20813Q.....Gear, BGFA/B7WA/MGFA/M7WA 5th (Countershaft)(24 Teeth, No Groove)(2.605”OD) .....(1.615”ID).....1
20813X.....Gear, MFYA/MGSA 5th (Countershaft) (27 Teeth, 1 Groove) (2.855”OD) (1.615”ID).....1
30816A.....Gear, BAYA/BGFA/BVGA-5/BVGA-6/BVGA-7/BYBA/B7TA/B7VA/B7WA/B7XA/B7ZA/MFYA/ .....MGFA/MGHA/MGSA/M7WA/M7ZA Reverse (Countershaft)(48 Teeth)(1.810”ID)(Angled Teeth) ..1
20818E.....Idler Gear, BAYA/BGFA/BVGA-5/BVGA-6/BVGA-7/BYBA/B7TA/B7VA/B7WA/B7XA/B7ZA/MFYA .....//MGFA/MGHA/MGSA/M7WA/M7ZA Reverse (29 Teeth)(1.250” Tall)(2.912”OD)(.708”ID).....1
30819A.....Pin, BAYA/BGFA/BVGA-5/BVGA-6/BVGA-7/BYBA/B7TA/B7VA/B7WA/B7XA/B7ZA/MFYA/MGFA .....//MGHA/MGSA/M7WA/M7ZA Reverse Idler (2.950” Long).....1
30820A.....Bracket, BAYA/BGFA/BVGA-5/BVGA-6/BVGA-7/BYBA/B7TA/B7VA/B7WA/B7XA/B7ZA/MFYA/ .....MGFA/MGHA/MGSA/M7WA/M7ZA Reverse Idler (Cast # POZZ).....1
30830A.....Selector, BAYA/BGFA/BVGA-5/BVGA-6/BVGA-7/BYBA/B7TA/B7VA/B7WA/B7XA/B7ZA/MFYA/ .....MGFA/MGHA/MGSA/M7WA/M7ZA Reverse (.587” Thick).....1
30835B.....Hub, BAYA/BGFA/BVGA-5/BVGA-6/BVGA-7/BYBA/B7TA/B7VA/B7WA/B7XA/B7ZA/MFYA/MGFA .....//MGHA/MGSA/M7WA/M7ZA Reverse (26 Teeth) (30 Splines) (.473” Thick).....1
20840G.....Fork, BAYA/BGFA/BVGA-5/BVGA-6/BVGA-7/BYBA/B7TA/B7VA/B7WA/B7XA/B7ZA/MFYA/ .....MGFA/MGHA/MGSA/M7WA/M7ZA Reverse (2.458”ID At Forks)(Casting # P7X Or P7Z With .....No Hole By The Cast Number).....1
20840GA.....Fork, BAYA/BGFA/BVGA/BYBA/B7TA/B7VA/B7WA/B7XA/B7ZA/MFYA/MGFA/MGHA/MGSA/ .....M7WA/M7ZA Reverse (2.458”ID At Forks)(Cast # P7Z With Hole By The Cast Number).....1
30850B.....Cushion, BAYA/BGFA/BVGA-5/BVGA-6/BVGA-7/BYBA/B7TA/B7VA/B7WA/B7XA/B7ZA/MFYA/ .....MGFA/MGHA/MGSA/M7WA/M7ZA 3rd & 4th Clutch (.060” Thick)(Also Fits BAYA/BGFA/ .....BVGA-5/BVGA-6/BVGA-7/BYBA/B7WA/MFYA/MGFA/MGHA/MGSA/M7WA 5th Clutch).....1-2
20850D.....Cushion, BAYA (Some) 3rd Clutch (.055” Thick)(4.410”OD)(Waved).....1
20857E.....Cushion, BAYA/BGFA/BVGA-5/BVGA-6/BVGA-7/BYBA/B7WA/MFYA/MGFA/MGHA/MGSA/ .....M7WA Low Clutch (.070” Thick)(4.570”OD).....1
20857F.....Cushion, B7XA/B7ZA/M7ZA Low Clutch (.041” Thick)(4.525”OD).....1
20857H.....Cushion, B7TA/B7VA Low Clutch (.046” Thick)(4.685”OD).....1
30861A.....Snap Ring, BAYA/BGFA/BVGA-5/BVGA-6/BVGA-7/BYBA/B7WA/MFYA/MGFA/MGHA/MGSA/ .....M7WA Holds Low Clutch Pressure Plate (.069” Thick) (5 9/16”OD).....1
20861H.....Use 20878E.....1
20878E.....Snap Ring, BVGA-5/BVGA-6/BVGA-7/BYBA/MGHA Holds 3rd Clutch Pressure Plate In .....(.069” Thick)(5.215”OD) (Also B7TA/B7VA 1st & 2nd Clutch Pressure Plate #873 & #861).....1-3
80862.....Snap Ring, B7TA/B7VA/B7XA/B7ZA/M7ZA 3rd/4th Clutch Retainer (Also BAYA/BGFA/BVGA-5/ .....BVGA-6/BVGA-7/BYBA/B7WA/MFYA/MGFA/MGHA/MGSA/M7WA 2nd/4th/5th Clutch).....1-3

© Whatever It Takes Transmission Parts. Inc.

PART #	HARD PARTS (Continued)	QTY.	REFERENCE #
20862F	Snap Ring, B7TA/B7VA/B7XA/B7ZA/M7ZA Holds 2nd Clutch Spring Retainer In (.070" Thick) (1.945"OD)	1	
80870	Snap Ring, BAYA/BGFA/BVGA-5/BVGA-6/BVGA-7/BYBA/B7TA/B7VA/B7WA/B7XA/B7ZA/MFYA /MGFA/MGHA/MGSA/M7WA/M7ZA Holds Bearing In Stator (Front)	1	
20873E	Snap Ring, MGHA 2nd Clutch Pressure Plate (Secondary Shaft) (Use 70861B)	1	
70861B	Snap Ring, B7TA/B7VA 3rd/4th Clutch #861 (.070" Thick)(5 3/8"OD) (Also Fits BAYA/BGFA/ BVGA-5/BVGA-6/BVGA-7/BYBA/B7WA/MGFA/MGHA/M7WA 4th/5th Clutch #861)(Also Fits BGFA/BVGA-5/BVGA-6/BVGA-7/MGFA/MGHA 2nd Clutch #873)	1-3	
20873F	Snap Ring, B7ZA / B7XA 2nd Clutch Pressure Plate (Secondary Shaft) (Use 80861)	1	
80861	Snap Ring, B7XA/B7ZA/MGHA/M7ZA Low & 2nd Clutch Pressure Plate #873 (Also BAYA/BGFA/B7WA/MFYA/MGFA/MGSA/M7WA 3rd Clutch) (Also Fits MFYA/MGSA/M7ZA 4th & 5th Clutch)	1-5	
20873H	Snap Ring, B7VA 2nd Clutch Pressure Plate (Secondary Shaft) (Use 20878E)	1	
20877E	Snap Ring, BAYA/BYBA/B7WA/MFYA/MGHA/MGSA/M7WA Holds Low Clutch Retainer In (1.930"OD)(.057" Thick)	1	
20878E	Snap Ring, BVGA-5/BVGA-6/BVGA-7/BYBA/MGHA Holds 3rd Clutch Pressure Plate In (.069" Thick)(5.215"OD)(Also B7TA/B7VA 1st & 2nd Clutch Pressure Plate #873 & #861)	1-3	
80879	Snap Ring, BAYA/BGFA/BVGA-5/BVGA-6/BVGA-7/BYBA/B7TA/B7VA/B7WA/B7XA/B7ZA/ MFYA/MGFA/MGHA/MGSA/M7WA/M7ZA Holds Caged Needle Bearing # 214 To Mainshaft	1	
20879E	Snap Ring, MGHA 3rd Clutch Retainer (Countershaft) (1.810"OD) (.097" Thick ID To OD) (Use 90862E)	1	
90862E	Snap Ring, BAYA/BGFA/BGHA/BVGA-5/BVGA-6/BVGA-7/BYBA/B7WA/MFYA/MGFA/MGHA/ MGSA/M7WA 3rd Clutch Retainer (.097" Thick ID To OD)(1.810"OD)	1	
20880E	Snap Ring, MGHA / B7ZA / B7XA / B7VA Holds Mainshaft Bearing To Case (Use 60884D)	1	
60884D	Snap Ring, BAYA/BGFA/BVGA-5/BVGA-6/BVGA-7/BYBA/B7TA/B7VA/B7WA/B7XA/B7ZA/ MFYA/MGFA/MGHA/8MGSA/M7WA/M7ZA Holds Mainshaft Bearing To Case #880	1	
20885E	Snap Ring, BAYA/BGFA/BVGA-5/BVGA-6/BVGA-7/BYBA/B7WA/MFYA/MGFA/MGHA/MGSA/ M7WA Holds Ball Bearing To Low Clutch Hub (Secondary Shaft)	1	
30886A	Snap Ring, BAYA/BGFA/BVGA-5/BVGA-6/BVGA-7/BYBA/B7TA/B7VA/ B7WA/B7XA/B7ZA/MFYA/ M7WA/M7ZA Holds Collar To Countershaft (.040" Thick)	1	
30887B	Split Washer, BAYA/BGFA/BVGA-5/BVGA-6/BVGA-7/BYBA/B7TA/B7VA/B7WA/B7XA/B7ZA/ MFYA/MGFA/MGHA/MGSA/M7WA/M7ZA Countershaft (.078" Thick)(1.699" Long)(.187" Wide) (2 Per Pack)	1	
30887BB	Horse Shoe Clips, BAYA/BGFA/BVGA-5/BVGA-6/BVGA-7/BYBA/B7TA/B7VA/B7WA/B7XA/ B7ZA/MFYA/MGFA/MGHA/MGSA/M7WA/M7ZA Secondary Shaft #887 (.078" Thick) (1.640" Long)	1	
30888A	Snap Ring, BAYA/BGFA/BVGA-5/BVGA-6/BVGA-7/BYBA/B7TA/B7VA/B7WA/B7XA/B7ZA/ MFYA/MGFA/MGHA/MGSA/M7WA/M7ZA Holds 1st Gear To Secondary Shaft (.058" Thick)	1	
20889C	Use 30880A	1	
30880A	Snap Ring, B7XA/B7ZA/M7ZA Secondary Shaft Bearing To Case (3.270"OD)	1	
30889A	Snap Ring, BAYA/BGFA/BVGA-5/BVGA-6/BVGA-7/BYBA/B7TA/B7VA/B7WA/MFYA/MGFA/ MGHA/MGSA/M7WA Holds Secondary Shaft Bearing To Case (.078" Thick)(3 3/8"OD)	1	
20890E	Snap Ring, BAYA/BYBA/B7TA/B7VA/B7WA/B7XA/B7ZA/MFYA/MGHA/MGSA/M7WA Holds Countershaft Bearing To Case (Use 60884CA)	1	
60884CA	Snap Ring, BAYA/BGFA/BVGA/BYBA/B7TA/B7VA/B7WA/B7XA/B7WA/MFYA/MGFA/MGHA/ MGSA/M7WA/M7ZA Holds Countershaft Bearing With 2.952"OD To Case #890	1	
20899E	Shim, BAYA/BGFA/BVGA-5/BVGA-6/BVGA-7/BYBA/B7TA/B7VA/B7WA/MFYA/MGHA/MGSA/ M7WA Differential To Case (Selective)(3.180"OD)	1	
20899F	Shim, B7XA/B7ZA/MGFA/M7ZA Differential To Case (Selective)(3.130"OD)	1	
80900-2	Detent Assembly, B7TA/B7VA/B7XA/B7ZA/M7ZA (Servo) Bolts to Servo With 2 Detents For Servo Rod (Aluminum)	1	
20900E	Servo Assembly, BAYA/BGFA/BVGA-5/BVGA-6/BVGA-7/BYBA/B7WA/MFYA/MGFA/MGHA/ MGSA/M7WA (Cast # P7Z)	1	
20900E-2	Detent Assembly, BAYA/BGFA/BVGA-5/BVGA-6/BVGA-7/BYBA/B7WA/MFYA/MGFA/MGHA/ MGSA/M7WA (Servo) (2 Bolt Steel)	1	
20900F	Servo Assembly, B7TA/B7VA/B7XA/B7ZA/M7ZA (Cast # P7Z)	1	
20900FA	Servo Assembly, B7TA/B7VA/B7XA/B7ZA (Cast # P7X)	1	
20924E	Regulator Body, BAYA/BGFA/BVGA-5/BVGA-6/BVGA-7/BYBA/B7WA/MFYA/MGFA/MGHA/ MGSA/M7WA (Cast # P7W)(Without Seperator Plate)	1	
20924F	Regulator Body, B7XA/B7ZA/M7ZA (Cast # P7Z)(Without Seperator Plate)	1	
20924H	Regulator Body, B7TA/B7VA (Cast # P7T)(Without Seperator Plate)	1	
20925E	Accumulator, BAYA/BGFA/BVGA-5/BVGA-6/BVGA-7/BYBA/B7WA/MFYA/MGFA/MGHA/MGSA/ M7WA (Cast # P7W)(7 Bolt)	1	
20925F	Accumulator, B7TA/B7VA/B7XA/B7ZA/M7ZA (Cast # P7X)(6 Bolt)	1	
20925FA	Accumulator, M7ZA (Cast # P7Z)(6 Bolt)	1	
20960E	Piston, BAYA/BGFA/BVGA-5/BVGA-6/BVGA-7/BYBA/B7WA/MGFA/MGHA/M7WA 4th/5th Clutch (4.860"OD)(1.860"ID)(Also Fits B7TA/B7VA 3rd/4th Clutch)	1	

© Whatever It Takes Transmission Parts. Inc.

30962A ..... Piston, B7XA/B7ZA/M7ZA 3rd & 4th Clutch #960 (.338" Thick)(Also Fits MFYA/MGSA 4th/5th Clutch #960) 1-2
20962E ..... Piston, BAYA/BYBA/B7WA/MFYA/MGHA/MGSA/M7WA 2nd Clutch (.348" Thick At Edge) (4.985"OD)(1.860"ID) 1
20962F ..... Piston, B7XA/B7ZA/M7ZA 2nd Clutch (.622" Thick At Edge)(4.710"OD)(1.793"ID) 1
20962H ..... Piston, B7TA/B7VA 2nd Clutch (.637" Thick At Edge)(4.865"OD)(1.792"ID) 1
20965D ..... Piston, BAYA/BGFA/B7WA/MFYA/MGFA/MGSA/M7WA 3rd Clutch (.450" Thick On Edge) (1.165" Thick Through Center)(4.708"OD) 1
20965E ..... Piston, BGHA/BVGA-5/BVGA-6/BVGA-7/BYBA/MGHA 3rd Clutch (.430" Thick On Edge) (1.165" Thick Through Center)(4.865"OD) 1
20967E ..... Piston, BAYA/BGFA/BVGA-5/BVGA-6/BVGA-7/BYBA/B7WA/MFYA/MGFA/MGHA/MGSA/ M7WA Low Hold Clutch (.366" Thick)(4.555"OD)(2.050"ID) 1
20967F ..... Piston, B7XA/B7ZA/M7ZA Low Clutch (.622" Thick)(4.710"OD)(1.793"ID) 1
20967H ..... Piston, B7TA/B7VA Low Clutch (.605" Thick)(4.865"OD)(1.793"ID) 1
20969D ..... Piston, BAYA/B7WA/MFYA/MGSA/M7WA Low Clutch (4.985"OD) 1.775"ID (1.195" Thick) 1
20969E ..... Piston, BGFA/BVGA-5/BVGA-6/BVGA-7/BYBA/MGHA Low Clutch (1.190" Thick)(5.105"OD) (1.775"ID) 1
20970D ..... Spring, BAYA 4th/5th Clutch Return (1.485" Tall Coil Height) 1
80970 ..... Spring, B7TA/B7VA/B7XA/B7ZA/M7ZA 3rd & 4th Clutch (Also BGFA/BVGA-5/BVGA-6/BVGA-7 /BYBA/B7WA/MFYA/MGFA/MGHA/MGSA/M7WA 4th & 5th Clutch) 1-2
30972B ..... Spring, B7XA/B7ZA/M7ZA Low Clutch Return #977 (1.775" Thick)(2.600"OD) 1
20972E ..... Spring, BAYA/BGFA/BVGA/BYBA/B7WA/MFYA/MGFA/MGHA/MGSA/M7WA 2nd Clutch Return (2.807" Tall) 1
20972F ..... Spring, B7TA/B7VA/B7XA/B7ZA/M7ZA 2nd Clutch Return (2.600"OD)(Also Fits B7TA/B7VA Low Clutch Return #977) 1-2
20975E ..... Spring, BAYA/BGFA/BVGA-5/BVGA-6/BVGA-7/BYBA/B7WA/MFYA/MGFA/MGHA/MGSA/ M7WA 3rd Clutch (1.835" Tall) (2.520"OD) 1
20977E ..... Spring, BAYA/BGFA/BVGA-5/BVGA-6/BVGA-7/BYBA/B7WA/MGFA/MGHA/M7WA Low Clutch Return (.295"OD Wire)(2.915"OD)(2.285" Tall) 1
20977X ..... Spring, MFYA/MGSA Low Clutch Return (2.915"OD) (2.355" Tall) (2.262"OD Coil) 1
80980 ..... Retainer, B7TA/B7VA/B7XA/B7ZA/M7ZA 3rd & 4th Clutch (Also BAYA/BGFA/BVGA-5/BVGA-6 BVGA-7/BYBA/B7WA/MFYA/MGFA/MGHA/MGSA/M7WA 4th & 5th Clutch) 1-2
20982E ..... Retainer, BAYA/BGFA/BVGA-5/BVGA-6/BVGA-7/BYBA/B7WA/MFYA/MGFA/MGHA/MGSA/ M7WA 2nd Clutch (.241" Thick)(3.020"OD)(1.875"ID) 1
20982F ..... Retainer/Piston, B7XA/B7ZA/M7ZA 2nd Clutch Inner Piston (Bonded) (3.940"OD)(1.318" Thick) 1996-02 1
20982H ..... Retainer/Piston, B7VA (Acura 3.2L 1999) / B7YA/B7TA (Odyssey 1999-01) 2nd Clutch (Bonded) (4.105"OD)(1.770"ID) (Also Fits B7VA/B7TA/B7YA Low Clutch #987) 1
30982B ..... Retainer/Piston, B7XA/B7ZA 1st & 2nd Clutch (Inner Bonded) (3.940"ID)(.990" Thick) 1-2
30982BK ..... Retainer/Piston Kit, B7XA/B7ZA 1st & 2nd Clutch (Inner Bonded) (3.940"ID)(.990" Thick) (Contains Both Bonded Retainer/Piston) 1
20985E ..... Retainer, BAYA/BGFA/BGHA/BVGA-5/BVGA-6/BVGA-7/BYBA/B7WA/MFYA/MGFA/MGHA/ MGSA/M7WA 3rd Clutch Spring (2.725"OD)(1.672"ID)(Cupped) 1
20987E ..... Retainer, BAYA/BYBA/B7WA/MFYA/MGHA/MGSA/M7WA Low Clutch Spring (2.860"OD) (1.745"ID) (.390" Thick) 1
20987F ..... Use 30982B 1
20987N ..... Use 20982H 1
20991E-4 ..... Shift Rod, BAYA/BGFA/BVGA-5/BVGA-6/BVGA-7/BYBA/B7TA/B7VA/B7WA/B7XA/MFYA/ MGFA/MGHA/MGSA/M7WA (13 13/16" Long) 1999-Up 1
20991F-4 ..... Shift Rod, B7ZA/M7ZA (12 1/2" Long) 1
20995E ..... Park Pawl Assembly, BAYA/BGFA/BVGA-5/BVGA-6/BVGA-7/BYBA/B7TA/B7VA/B7WA/B7XA/ B7ZA/MFYA/MGFA/MGHA/MGSA/M7WA/M7ZA (7 Pieces) 1
20995E-6 ..... Detent Pivot Set, MGHA (3 Pieces) 1
20995F-6 ..... Detent Pivot Set, B7VA/B7XA/B7ZA (3 Pieces) 1
80996 ..... Fitting, B7TA/B7VA/B7XA/B7YA/M7ZA/MGHA Cooler Line (1 1/2" Long) Holds Cooler Line To Bell 1-2
20996E ..... Line Fitting, BAYA/BGFA/BVGA-5/BVGA-6/BVGA-7/BYBA/B7TA/B7VA/B7WA/B7XA/B7ZA/ MFYA/MGFA/MGHA/MGSA/M7WA/M7ZA Cooler Line (3 7/8" Long) 1
30998B ..... External Cooler Adapter, Acura/Honda (Use To Replace The OEM) 1
20999E ..... Tube Set, BAYA/BGFA/BVGA-5/BVGA-6/BVGA-7/BYBA/B7WA/MFYA/MGFA/MGHA/MGSA/ M7WA (9 Pieces) 1
20999F ..... Tube Set, B7TA/B7XA/B7ZA/M7ZA (7 Pieces) (Can Use 20999H) 1
20999H ..... Tube Set, B7VA (9 Pieces) 1

© Whatever It Takes Transmission Parts. Inc.

M1WA / MPWA (Vigor)

FWD 4 Speed

000 P&R Kit
002 OHK Kit
004 Master L/Steels Kit
006 Master W/Steels Kit
011 Filter Kit
400 Tech Manual

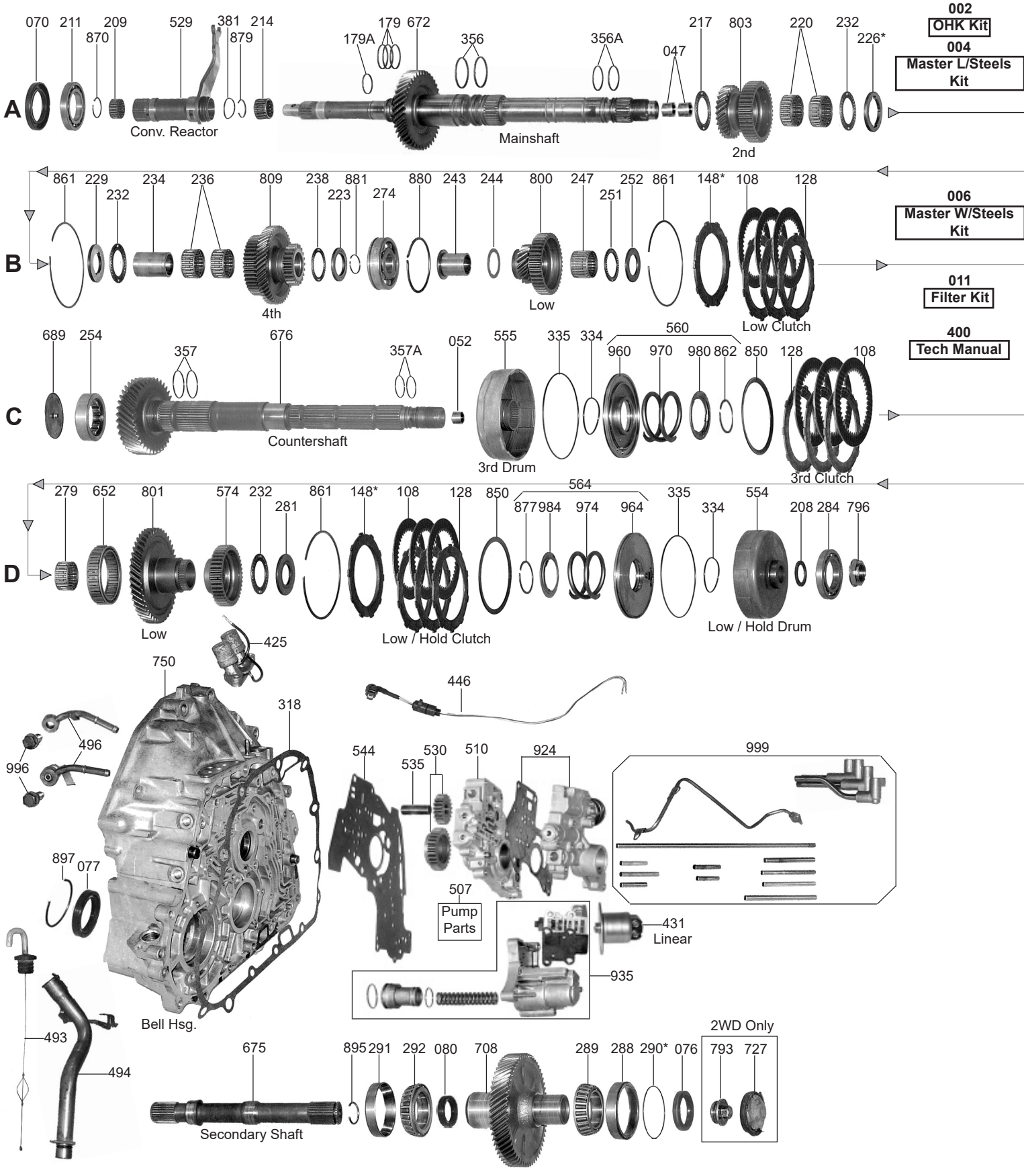

© Whatever It Takes Transmission Parts. Inc.

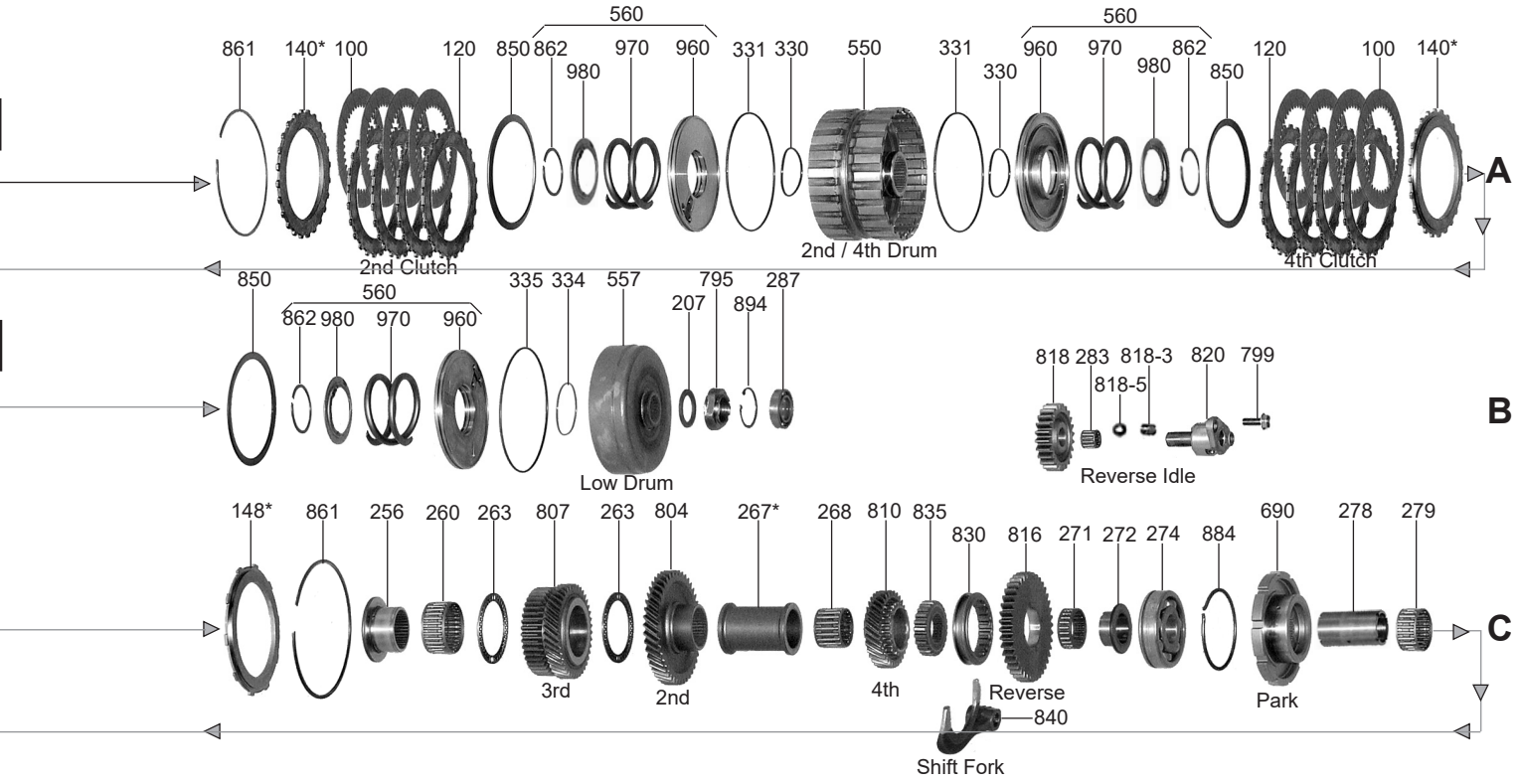

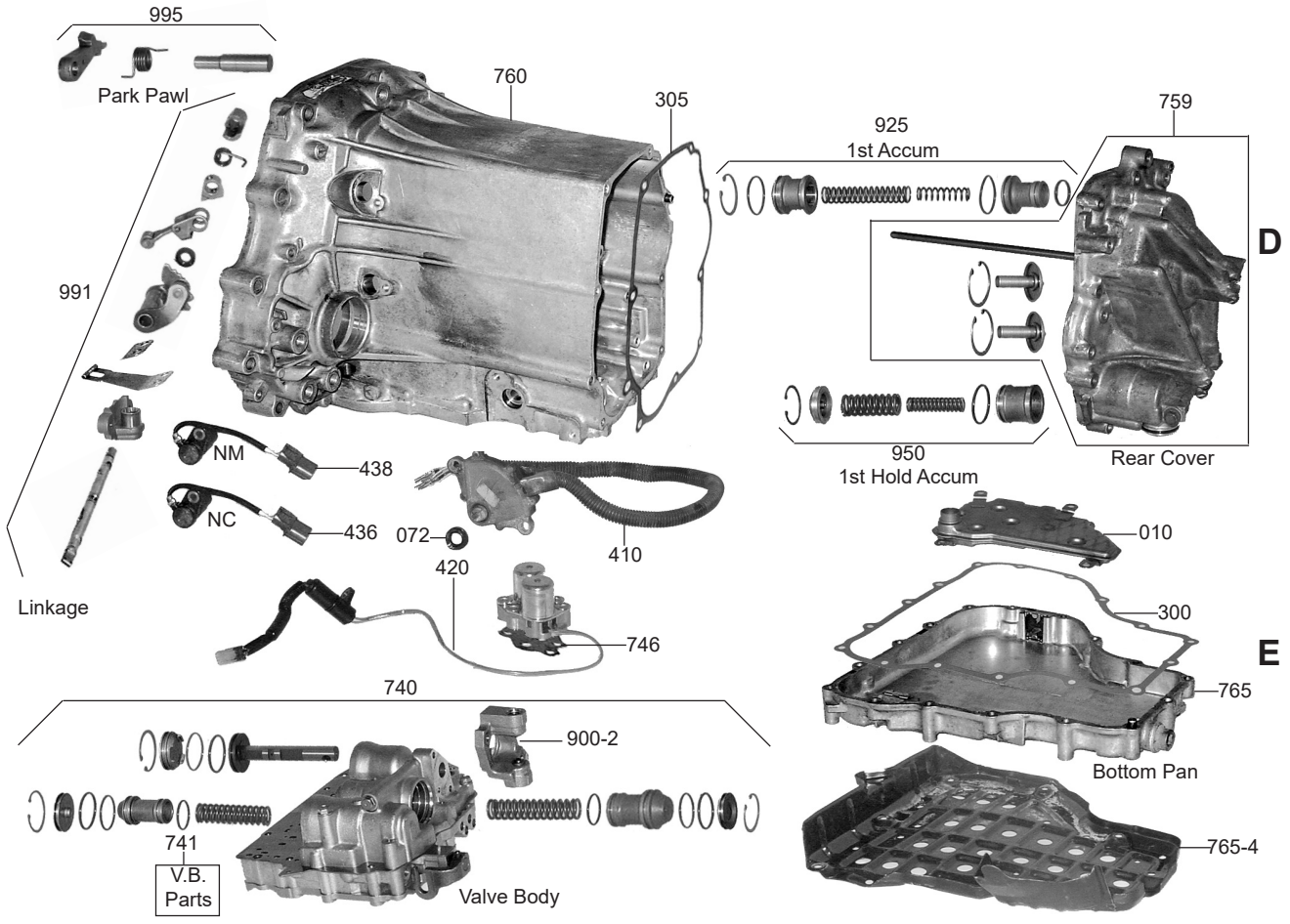

1-800-940-0197

© Whatever It Takes Transmission Parts. Inc.

MPYA / M5DA / M5HA

FWD 4 Speed

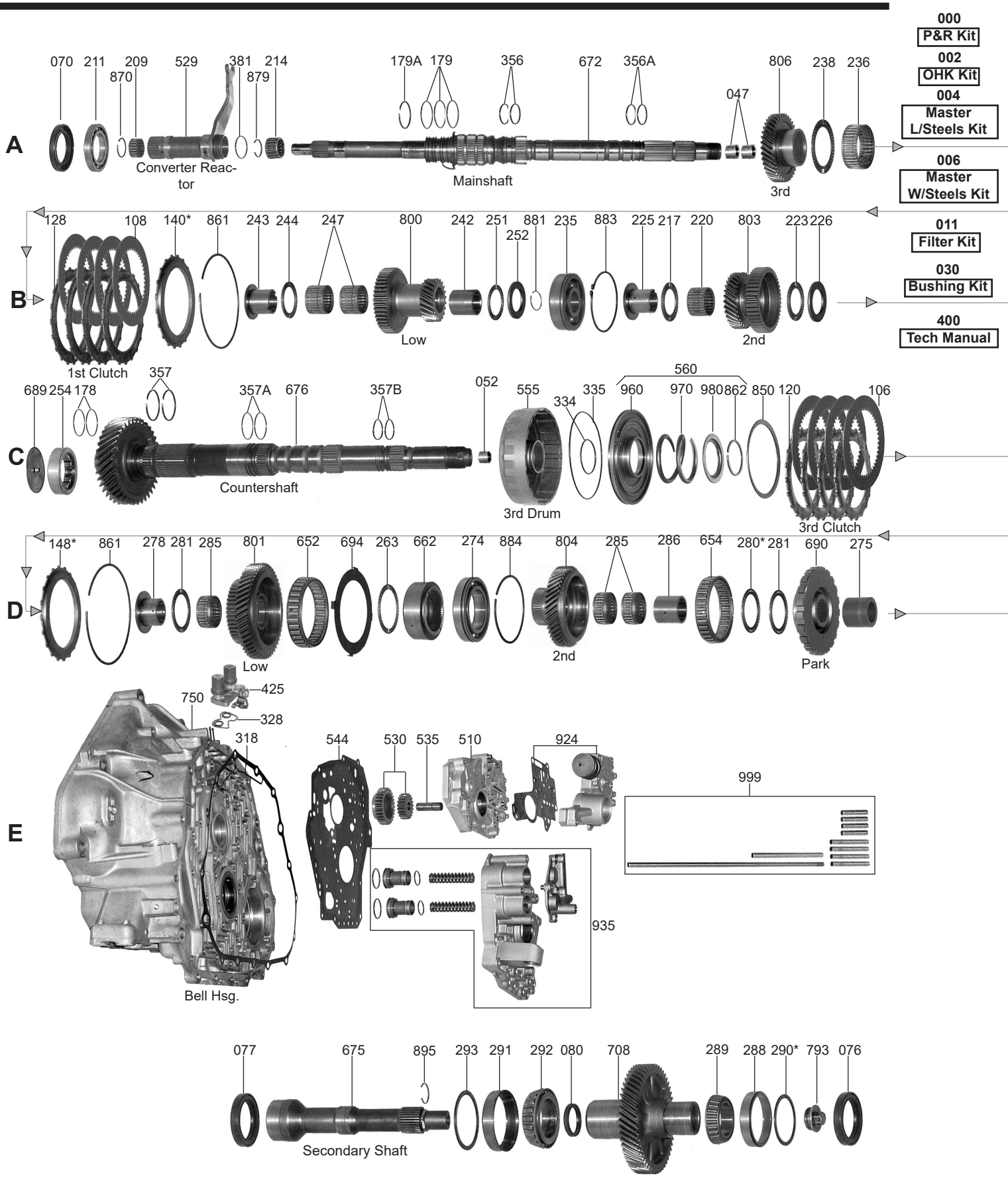

© Whatever It Takes Transmission Parts. Inc.

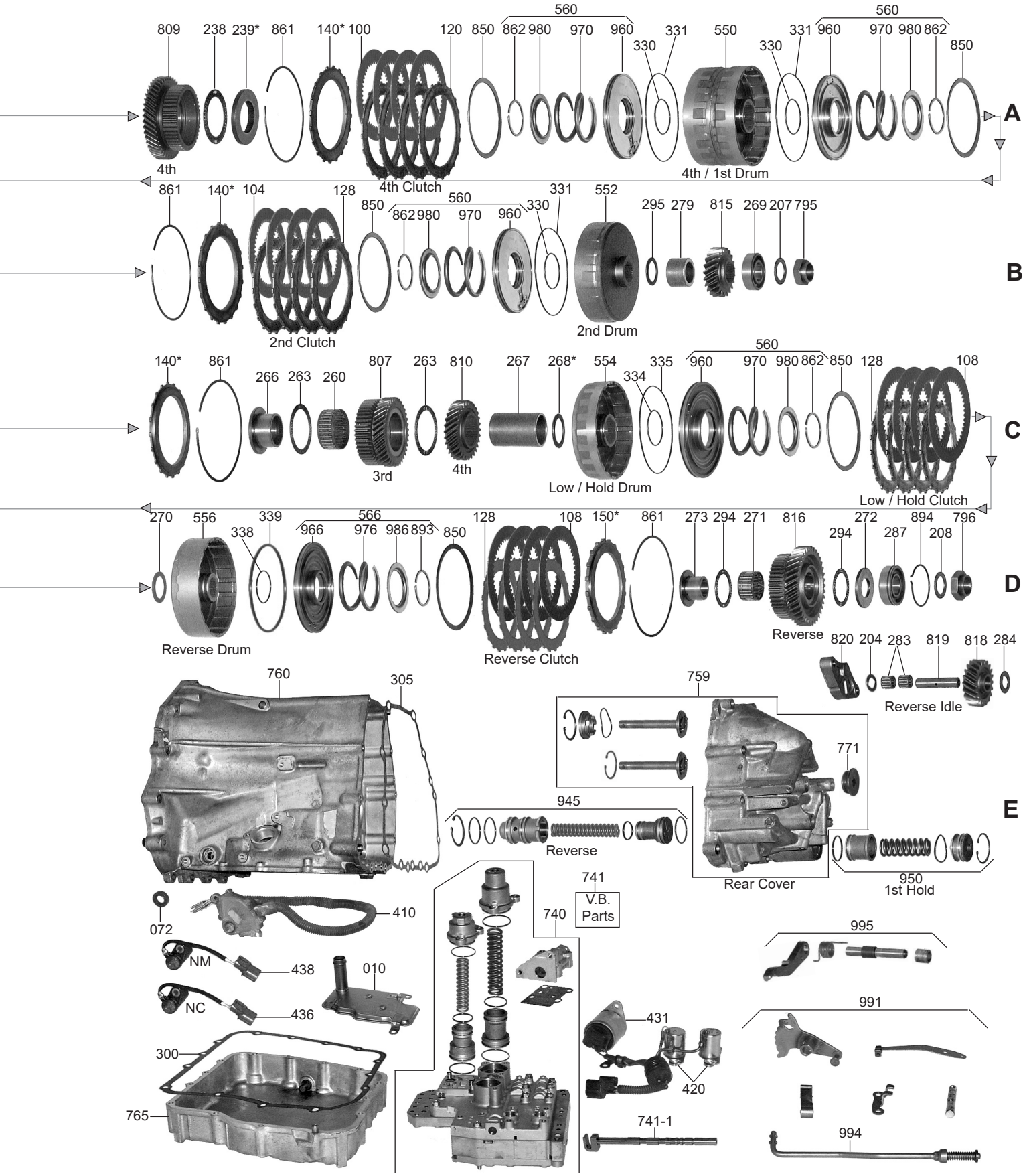

1-800-940-0197

© Whatever It Takes Transmission Parts. Inc.

M1WA / MPWA (Vigor) / MPYA / M5DA / M5HA

FWD 4 Speed

PART #	PAPER & RUBBER KIT	QTY.	REFERENCE #
70000B	Paper & Rubber Kit, MPYA / M5DA / M5HA 1991-02	1	
70000C	Paper & Rubber Kit, MPWA/M1WA (Vigor 1991-94)(Acura TL 2.5L 1995-98)	1	

PART #	OVERHAUL KITS	QTY.	REFERENCE #
70002B	Overhaul Kit, MPYA / M5DA / M5HA 1991-04	1	
70002C	Overhaul Kit, MPWA/M1WA (Vigor 1991-94)(Acura TL 2.5L 1995-98)	1	
70002D	Overhaul Kit, M1WA (Acura 2.5TL) 1995-98	1	

PART #	MASTER L/STEEL KIT	QTY.	REFERENCE #
70004B	Master L/Steels Kit, MPYA (Legend) 1991-95	1	
70004C	Master L/Steels Kit, MPWA (Vigor) 1992-95	1	
70004D	Master L/Steels Kit, M1WA (Acura 2.5TL) 1995-98	1	
70004H	Master L/Steels Kit, M5DA / M5HA (Acura RL 3.5L 1996-00, Acura TL 3.2L 1995-98)	1	

PART #	MASTER W/STEEL KIT	QTY.	REFERENCE #
70006B	Master W/Steels Kit, MPYA (Legend) 1991-95	1	
70006C	Master W/Steels Kit, MPWA (Vigor) 1992-95	1	
70006D	Master W/Steels Kit, M1WA (Acura 2.5TL) 1995-98	1	
70006H	Master L/Steels Kit, M5DA / M5HA (Acura RL 3.5L 1996-02, Acura TL 3.2L 1995-99)	1	

PART #	FILTER	QTY.	REFERENCE#
70010B	Filter, MPYA / M5DA / M5HA 1991-95	1	
70010C	Filter, MPWA (Vigor) 1992-95	1	
70010D	Filter, M1WA(Acura 2.5TL) 1995-98	1	



70010B



70010C



70010D

PART #	FILTER KIT	QTY.	REFERENCE #
70011B	Filter Kit, MPYA / M5DA 1991-02	1	
70011C	Filter Kit, MPWA (Vigor) 1992-95	1	
70011D	Filter Kit, M1WA (Acura 2.5TL) 1995-98	1	

PART #	MISC. FILTERS	QTY.	REFERENCE #
70018C	Screen, MPWA (In Valve Body & In Pump) (.570”OD) (.125” Thick Rubber Boot)	1-2	
70018CA	Screen, MPWA (In Valve Body & In Pump) (.662”OD) (.315” Thick Rubber Boot)	1-2	

PART #	BUSHINGS	QTY.	REFERENCE #
70030B	Bushing Kit, MPYA/M5DA/M5HA (4 Pieces)	1	
30030A	Bushing Kit, MPWA (Vigor) (3 Pieces)	1	
T-28999	Tool Set, Acura/Honda (22 Pieces)(Bushing Remover & Installer)(This Set Works For All Honda With Bushings)	1	

PART #	METAL CLAD SEALS	QTY.	REFERENCE #
60070A	Seal, MPWA (Vigor) / M1WA / MPYA / M5DA Converter (46 x 70 x 8mm) Counter Clockwise Helix	1	
70070B	Seal, MPYA / M5DA /M5HA Converter (46x70x8mm)	1	91207-PY4-004
60072	Seal, MPWA (Vigor) / M1WA / MPYA / M5DA Manual Shaft	1	

© Whatever It Takes Transmission Parts. Inc.

60072AA	Seal, MPYA / MPWA Manual Shaft 1990-95	1	91209-612-003
70076B	Seal, MPYA / M5DA Axle (Case Side) 4x4 (45x61x8mm)	1	91201-PY5-003
70076BA	Seal, MPYA / M5DA Axle (Case Side) (Plugs Off Axle Hole) 2WD Only	1	
70076C	Seal, MPWA Axle (Case Side) 1992-95	1	91206-PW5-015
70077B	Seal, MPYA / M5DA Axle (Bell Housing Side) (56x75x11mm)	1	91205-PY5-003
70077C	Seal, MPWA Axle (Bell Housing Side) (50x70x11mm)	1	91201-PW5-015
70080C	Seal, MPWA Transfer Gear To Front Shaft	1	

PART #	FRICTION CLUTCH	QTY.	REFERENCE #
70100B	Friction, MPYA / M5DA 4th Clutch (.093") 45 Teeth (5.041"OD) (Green)	4	22645-PY4-003
60100C	Friction, MPWA (Vigor) Low / 3rd / Low Hold Clutch (.075") 41 Teeth (4.556"OD)	3-17	
70100CA	Friction, MPWA / M1WA 2nd/4th Clutch (.075") 41 Teeth (4.556"OD) (Tan)(Use 60100C)	4	22545-PW7-A01
70104B	Friction, MPYA / M5DA 2nd Clutch (.079") 45 Teeth (5.041"OD) (Red)	4	22344-PY4-013
70106B	Friction, MPYA / M5DA 3rd Clutch (.093") 45 Teeth (5.041"OD) (Red)	4	22644-PY4-003
70108B	Friction, MPYA / M5DA 1st / Low Hold / Reverse Clutch (.079") 45 Teeth (5.041"OD)	4-12	22544-PY4-003

PART #	STEEL CLUTCH	QTY.	REFERENCE #
60120C	Steel, M1WA/MPWA (Vigor) Low/3rd/Low Hold Clutch #128 (.079" Thick)	3-12	22543-PF4-000
70120B	Steel, MPYA 3rd / 4th Clutch (.102") 20 Teeth (3.756"ID) (Also M5DA 4th Clutch)	4-8	22643-PY4-003
70120CA	Steel, M1WA/MPWA (Vigor) 2nd / 4th Clutch (.090") 24 Teeth (3.438"ID) 1992-98	4-8	22653-PX3-801
70128B	Steel, MPYA / M5DA 1st / Low Hold / 2nd / Reverse Clutch (.079") 20 Teeth (3.756"ID) (Also M5DA 3rd Clutch)	4-16	22543-PY4-003

PART #	CLUTCH PRESSURE PLATES	QTY.	REFERENCE #
70140BA	Pressure Plate, MPYA / M5DA 1st / 2nd / 3rd / 4th Clutch (.083") (Stamped #1)	1-4	22551-PY4-003
70140BB	Pressure Plate, MPYA / M5DA 1st / 2nd / 3rd / 4th Clutch (.087") (Stamped #2)	1-4	22552-PY4-003
70140BC	Pressure Plate, MPYA / M5DA 1st / 2nd / 3rd / 4th Clutch (.091") (Stamped #3)	1-4	22553-PY4-003
70140BD	Pressure Plate, MPYA / M5DA 1st / 2nd / 3rd / 4th Clutch (.094") (Stamped #4)	1-4	22554-PY4-003
70140BE	Pressure Plate, MPYA / M5DA 1st / 2nd / 3rd / 4th Clutch (.098") (Stamped #5)	1-4	22555-PY4-003
70140BF	Pressure Plate, MPYA / M5DA 1st / 2nd / 3rd / 4th Clutch (.102") (Stamped #6)	1-4	22556-PY4-003
70140BG	Pressure Plate, MPYA / M5DA 1st / 2nd / 3rd / 4th Clutch (.106") (Stamped #7)	1-4	22557-PY4-003
70140BH	Pressure Plate, MPYA / M5DA 1st / 2nd / 3rd / 4th Clutch (.110") (Stamped #8)	1-4	22558-PY4-003
70140BJ	Pressure Plate, MPYA / M5DA 1st / 2nd / 3rd / 4th Clutch (.114") (Stamped #9)	1-4	22559-PY4-003
60140C-1	Pressure Plate, MPWA (Vigor) Low / 3rd / Low Hold Clutch (116mm) (Stamped #1)	1-3	
60140C-2	Pressure Plate, MPWA (Vigor) Low / 3rd / Low Hold Clutch (116mm) (Stamped #2)	1-3	
60140C-3	Pressure Plate, MPWA (Vigor) Low / 3rd / Low Hold Clutch (116mm) (Stamped #3)	1-3	
60140C-4	Pressure Plate, MPWA (Vigor) Low / 3rd / Low Hold Clutch (116mm) (Stamped #4)	1-3	
60140C-5	Pressure Plate, MPWA (Vigor) Low / 3rd / Low Hold Clutch (116mm) (Stamped #5)	1-3	
60140C-6	Pressure Plate, MPWA (Vigor) Low / 3rd / Low Hold Clutch (116mm) (Stamped #6)	1-3	
60140C-7	Pressure Plate, MPWA (Vigor) Low / 3rd / Low Hold Clutch (116mm) (Stamped #7)	1-3	
60140C-8	Pressure Plate, MPWA (Vigor) Low / 3rd / Low Hold Clutch (116mm) (Stamped #8)	1-3	
60140C-9	Pressure Plate, MPWA (Vigor) Low / 3rd / Low Hold Clutch (116mm) (Stamped #9)	1-3	
60140C-10	Pressure Plate, MPWA (Vigor) Low / 3rd / Low Hold Clutch (116mm) (Stamped #10)	1-3	
70140CA	Pressure Plate, MPWA (Vigor) 2nd / 4th Clutch (Stamped #1)	1-2	
70140CB	Pressure Plate, MPWA (Vigor) 2nd / 4th Clutch (Stamped #2)	1-2	
70140CC	Pressure Plate, MPWA (Vigor) 2nd / 4th Clutch (Stamped #3)	1-2	
70140CD	Pressure Plate, MPWA (Vigor) 2nd / 4th Clutch (Stamped #4)	1-2	
70140CE	Pressure Plate, MPWA (Vigor) 2nd / 4th Clutch (Stamped #5)	1-2	
70140CF	Pressure Plate, MPWA (Vigor) 2nd / 4th Clutch (Stamped #6)	1-2	
70140CG	Pressure Plate, MPWA (Vigor) 2nd / 4th Clutch (Stamped #7)	1-2	
70140CH	Pressure Plate, MPWA (Vigor) 2nd / 4th Clutch (Stamped #8)	1-2	
70140CJ	Pressure Plate, MPWA (Vigor) 2nd / 4th Clutch (Stamped #9)	1-2	
70140CK	Pressure Plate, MPWA (Vigor) 2nd / 4th Clutch (Stamped #10)	1-2	
70148BA	Pressure Plate, MPYA / M5DA Low Hold Clutch (.083") (Stamped #L1)	1	22351-PY4-003
70148BB	Pressure Plate, MPYA / M5DA Low Hold Clutch (.087") (Stamped #L2)	1	22352-PY4-003
70148BC	Pressure Plate, MPYA / M5DA Low Hold Clutch (.091") (Stamped #L3)	1	22353-PY4-003
70148BD	Pressure Plate, MPYA / M5DA Low Hold Clutch (.094") (Stamped #L4)	1	22354-PY4-003
70148BE	Pressure Plate, MPYA / M5DA Low Hold Clutch (.098") (Stamped #L5)	1	22355-PY4-003
70148BF	Pressure Plate, MPYA / M5DA Low Hold Clutch (.102") (Stamped #L6)	1	22356-PY4-003
70148BG	Pressure Plate, MPYA / M5DA Low Hold Clutch (.106") (Stamped #L7)	1	22357-PY4-003
70148BH	Pressure Plate, MPYA / M5DA Low Hold Clutch (.110") (Stamped #L8)	1	22538-PY4-003
70148BJ	Pressure Plate, MPYA / M5DA Low Hold Clutch (.114") (Stamped #L9)	1	22359-PY4-003
70148C	Pressure Plate, MPWA (Vigor) Low / 3rd / Low Hold Clutch (116mm) (Use 60140C)	1-3	

© Whatever It Takes Transmission Parts. Inc.

PART #	CLUTCH PRESSURE PLATES	QTY.	REFERENCE #
70150BA	Pressure Plate, MPYA / M5DA Reverse Clutch (.161") (Stamped #R1)	1	22451-PY4-003
70150BB	Pressure Plate, MPYA / M5DA Reverse Clutch (.165") (Stamped #R2)	1	22452-PY4-003
70150BC	Pressure Plate, MPYA / M5DA Reverse Clutch (.169") (Stamped #R3)	1	22453-PY4-003
70150BD	Pressure Plate, MPYA / M5DA Reverse Clutch (.173") (Stamped #R4)	1	22454-PY4-003
70150BE	Pressure Plate, MPYA / M5DA Reverse Clutch (.177") (Stamped #R5)	1	22455-PY4-003
70150BF	Pressure Plate, MPYA / M5DA Reverse Clutch (.181") (Stamped #R6)	1	22456-PY4-003
70150BG	Pressure Plate, MPYA / M5DA Reverse Clutch (.185") (Stamped #R7)	1	22457-PY4-003
70150BH	Pressure Plate, MPYA / M5DA Reverse Clutch (.189") (Stamped #R8)	1	22458-PY4-003
70150BJ	Pressure Plate, MPYA / M5DA Reverse Clutch (.193") (Stamped #R9)	1	22459-PY4-003

PART #	WASHERS & BEARINGS	QTY.	REFERENCE #
70204B	Washer, MPYA / M5DA Reverse Idler To Bracket (.985"OD)	1	
70207B	Washer, MPYA / M5DA Under Mainshaft Nut (Also MPYA / M5DA Under Counter Shaft Nut)	1-2	
70207C	Washer, MPWA Under Mainshaft Nut (Also MPWA Under Counter Shaft Nut)	1-2	
70208B	Washer, MPYA / M5DA Under Counter Shaft Nut (Use 70207B)	1	
70208C	Washer, MPWA Under Counter Shaft Nut (Use 70207C)	1	
60209A	Caged Needle Bearing, MPWA (Vigor) Converter Reactor Inner	1	
70209B	Caged Needle Bearing, MPYA / M5DA Converter Reactor Inner (1.080"OD)	1	
80211	Ball Bearing, MPWA (Vigor) Bell Housing To Converter (2.675"OD) (Also Countershaft To Rear Cover)	1-2	
70211B	Ball Bearing, MPYA / M5DA Bell Housing To Converter (2.755"OD)	1	
80214	Caged Needle Bearing, MPWA (Vigor) / MPYA Mainshaft To Converter Reactor	1	
70214H	Caged Needle Bearing, M5DA Mainshaft To Converter Reactor (3/4" Long)	1	
70217B	Thrust Bearing, MPYA / M5DA 2nd Gear To Mainshaft (Use 80253)	1	
70217C	Thrust Bearing, MPWA (Vigor) 2nd Gear To Mainshaft (Use 70232C)	1	
70220B	Caged Needle Bearing, MPYA / M5DA 2nd Gear (Mainshaft) Inner (1.555"OD)	1	
70220C	Caged Needle Bearing, MPWA (Vigor) 2nd Gear (Mainshaft) (1.668"OD)	2	
70223C	Thrust Bearing, MPWA (Vigor) 2nd Gear To Mainshaft (Use 70232C)	1	
70225B	Collar, MPYA / M5DA (Mainshaft) 2nd Gear To Case Bearing (1.378" Long)	1	
70226B	Race, MPYA / M5DA 2nd Gear Mainshaft (.155" Thick)	1	
70226C	Washer, MPWA (Vigor) 2nd Gear To Drum (Mainshaft) (2.220"OD) Selective	1	
30229A	Caged Needle Bearing, MPWA (Vigor) 4th Gear Inner (Mainshaft) (Also Low Gear (Counter Shaft) (.770" Thick)	2-4	
70229C	Race, MPWA (Vigor) 4th Gear To Drum (Mainshaft) (2.198"OD) (.177" Thick)	1	
30232A	Thrust Bearing, MPWA (Vigor) 4th Gear (Mainshaft) # 238 (1.800"OD) (.078" Thick)	1	
70232C	Thrust Bearing, MPWA (Vigor) 4th Gear (Mainshaft) (.097") (2.235"OD) Also Fits MPWA (Vigor) 2nd Gear To Mainshaft (Both Sides) (Also Fits MPWA (Vigor) Low Hold Hub To Low Hold Drum (Counter Shaft)	1-4	
70234C	Collar, MPWA (Vigor) 4th Gear (Mainshaft) (1.870" Long) (1.100"ID)	1	
70235B	Ball Bearing, MPYA / M5DA Mainshaft To Case (3.235"OD)	1	
70236B	Caged Needle Bearing, MPYA / M5DA 3rd Gear Inner (2.295"OD)	1	
70236C	Caged Needle Bearing, MPWA (Vigor) 4th Gear Inner (Mainshaft) (Use 30229A)	2	
70238B	Thrust Bearing, MPYA / M5DA 4th Gear (Mainshaft) (2.980"OD) (Both Sides)	2	
70238C	Thrust Bearing, MPWA (Vigor) 4th Gear To # 223 Race (Mainshaft) (Use 30232A)	1	
70239B	Shim, MPYA / M5DA 4th Gear (Mainshaft) Stepped (2.910"OD) Selective	1	
70242B	Sleeve, MPYA / M5DA (Mainshaft) Low Gear Inner (1.341" Long)	1	
70243B	Collar, MPYA / M5DA (Mainshaft) Low Gear Inner Top Hat (1.335" Long)	1	
70243C	Colar, MPWA (Vigor) Low Gear (Mainshaft) (1.530" Long) (1.110"ID)	1	
70244B	Thrust Bearing, MPYA / M5DA Low Gear 1st / 4th Drum (Mainshaft)	1	
70244C	Washer, MPWA (Vigor) Low Gear (mainshaft) (1.728"OD) (.057" Thick)	1	
70247B	Caged Needle Bearing, MPYA / M5DA Low Gear (Mainshaft) (1.025" Thick)	2	
70247C	Caged Needle Bearing, MPWA (Vigor) Low Gear (Mainshaft) (1.435"OD)	1	
70251B	Thrust Bearing, MPYA / M5DA Low / Gear (Countershaft) To Shim (1.922"OD)	1	
70251C	Thrust Bearing, MPWA (Vigor) Low Drum To Low Gear (Mainshaft) (1.922"OD)	1	
70252B	Spacer, MPYA / M5DA Low Gear (Mainshaft) To Snap Ring	1	
70252C	Race, MPWA (Vigor) Low Drum To Low Gear (Mainshaft) (1.885"OD)	1	
80253	Thrust Bearing, MPYA / M5DA 2nd Gear (Both Sides) 2.200"OD (1.422"ID)	1-2	
60254C	Roller Bearing, MPWA (Vigor) / MPYA / M5DA Countershaft To Bell Housing (2.638"OD)	1	
70256C	Collar, MPWA (Vigor) 3rd Gear (Countershaft) (1.122" Thick)	1	
70260B	Caged Needle Bearing, MPYA / M5DA 3rd Gear Inner (Counter Shaft)	1	
70260C	Caged Needle Bearing, MPWA (Vigor) 3rd Gear Inner (Counter Shaft) (1.905"OD) (.930" Thick)	1	
70263B	Thrust Bearing, MPYA / M5DA 3rd Gear (Counter Shaft) (Both Sides) (Also Low Gear To Inner race)	1-3	
70263C	Thrust Bearing, MPWA (Vigor) 3rd Gear (Countershaft) (1.930"ID) (Both Sides)	1-2	
70266B	Collar, MPYA / M5DA (Mainshaft) 3rd Drum To 3rd Gear Top Hat (1.142" Tall)	1	

© Whatever It Takes Transmission Parts. Inc.

70267B	Collar, MPYA / M5DA 4th Gear To Low Hold Drum (Countershaft)	1
70267C	Collar, MPWA (Vigor) 2nd Gear To 4th Gear (Countershaft) (2.590" Long) (1.383"ID)	1
70268B	Spacer, MPYA 4th Gear Collar To Drum (Countershaft) (1.845"OD) Selective	1
70268C	Caged Needle Bearing, MPWA (Vigor) 4th Gear (Countershaft) (1.460"OD)	1
70269B	Ball Bearing, MPYA / M5DA (Mainshaft) 2nd Drum To Rear Cover (2.048"OD)	1
70270B	Shim, MPYA / M5DA Park Gear To Reverse Drum (Countershaft) (.097" Thick)	1
70271B	Caged Needle Bearing, MPYA / M5DA Reverse Gear (Countershaft) (.888" Wide)	1
70271C	Caged Needle Bearing, MPWA (Vigor) Reverse Gear (Countershaft) (1.528"OD)	1
70272B	Race, MPYA / M5DA Reverse Gear To Ball Bearing # 287 (Countershaft)	1
70272C	Collar, MPWA (Vigor) Reverse Gear (Countershaft) (.650" Thick) (Top Hat)	1
70273B	Collar, MPYA / M5DA Reverse Gear (Countershaft) (1.052" Thick) (Top Hat)	1
70274B	Ball Bearing, MPYA / M5DA Countershaft To Case (3.545"OD)	1
70274C	Ball Bearing, MPWA (Vigor) Mainshaft To Case (2.995"OD) (1.110"ID) (Also Counter Shaft To Case)	1-2
70275B	Collar, MPYA / M5DA Park Gear To Reverse Drum (Countershaft) (1.397" Long)	1
70278B	Collar, MPYA / M5DA Low Gear To Low Hold Drum (Counter Shaft) (1.100" Tall)	1
70278C	Collar, MPWA (Vigor) Park Gear To Low Gear (Countershaft) (2.365" Long)	1
70279B	Sleeve, MPYA / M5DA (Mainshaft) 2nd Drum To #815 Gear (1.025" Long) (1.575"OD)	1
70279C	Caged Needle Bearing, MPWA (Vigor) Low Gear (Countershaft) (Use 30229A)	2
70280B	Race, MPYA Park Gear To 2nd Gear (Counter Shaft) (1.895"ID) Selective	1
70280H	Race, M5DA Park Gear To Low Gear (1.785"ID)	1
70281B	Thrust Bearing, MPYA / M5DA Low Gear To Collar (Counter Shaft) (2.430"OD) (Also Park Gear To Collar)	1-2
70281C	Race, MPWA (Vigor) Low Hold Hub To Low Hold Drum (Countershaft) (2.200"OD) (.136" Thick)	1
80283	Caged Needle Bearing, MPYA / M5DA Reverse Idler (14 Rollers)	2
80283A	Caged Bearing, MPYA / M5DA / MPWA (Vigor) Reverse Idler (12 Rollers)	1-2
70285B	Caged Needle Bearing, MPYA / M5DA Low Gear (Counter Shaft) (.715" Wide) (Also 2nd Gear Inner)	1-3
70286B	Collar, MPYA / M5DA 2nd Gear To Park Gear (Countershaft) (1.416" Long)	1
70287B	Ball Bearing, MPYA / M5DA Countershaft To Rear Cover (2.210"OD)	1
70287C	Ball Bearing, MPWA (Vigor) Mainshaft To Rear Cover (1.455"OD)	1
70287CA	Ball Bearing, MPWA (Vigor) Counter Shaft To Rear Cover (2.675"OD) (Use 80211)	1
70288B	Cup Race, MPYA / M5DA Secondary Bearing To Case	1
70288C	Cup Race, MPWA (Vigor) Secondary Bearing To Case (Cast # 32008XSTPX4)	1
70289B	Cone Bearing, MPYA / M5DA Secondary Gear To Case	1
70289C	Cone Bearing, MPWA (Vigor) Secondary Gear To Case (21 Rollers)	1
70290B	Shim, MPYA / M5DA Secondary Bearing To Case Selective (2.950"OD)	1
70290C	Shim, MPWA (Vigor) Secondary Bearing To Case (.146" Thick) (2.660"OD) Selective	1
70291B	Cup Race, MPYA / M5DA Secondary Gear Bearing To Bell Housing (3.545"OD)	1
60291EC	Cup Race, MPWA (Vigor) Secondary Gear To Bell Housing	1
70292B	Cone Bearing, MPYA / M5DA Secondary Gear To Bell (2.165"ID)	1
70292C	Cone Bearing, MPWA (Vigor) Secondary Gear To Bell Housing (24 Rollers)	1
70293B	Shim, MPYA / M5DA Secondary Race To Bell Selective (3.520"OD)	1
70294B	Thrust Bearing, MPYA / M5DA Reverse Gear (Countershaft)	1
70295B	Shim, MPYA / M5DA (Mainshaft) 2nd Drum To Sleeve (.100" Thick)	1

PART #	GASKETS & RUBBER COMPONENTS	QTY.	REFERENCE #
70300B	Gasket, MPYA / M5DA Bottom Pan	1	
70300C	Gasket, MPWA (Vigor) Bottom Pan	1	
60313A	O-Ring, Honda Converter (OE Upgraded)(Fits On Converter Hub, Inside Of Drive Pump Gear)	1	

PART #	TECHNICAL MANUALS	QTY.	REFERENCE #
70400B	Technical Manual, MPYA / M5DA (Legend) 1991-Up	1	83-LEG1991TM
70400C	Technical Manual, M1WA / MPWA (Vigor) (Acura TL 2.5L & Vigor)	1	ACURA VIGOR

PART #	ELECTRICAL COMPONENTS	QTY.	REFERENCE #
70410B	Switch, MPYA / M5DA At Gear Position (2 Bolt)	1	
70410C	Switch, MPYA (Vigor) At Position (2 Bolts) 11 Wires (20" Long)	1	
70420B	Solenoid Assembly, MPYA / M5DA / M5HA Shift (on Inside)	1	
70420B	Solenoid Assembly, MPYA / M5DA Internal	1	
70420C	Dual Solenoid, MPWA (Vigor) With Harness (Bolts To Servo)	1	
70423B	Solenoid, MPYA Linear	1	
70425B	Solenoid Assembly, MPYA / M5DA / M5HA Lock-up (On Outside)	1	
70425C	Dual Solenoid, MPWA (Vigor) Lock-Up On Top Of Bell	1	
70431C	Solenoid, MPWA (Vigor) Linear	1	
70436B	Sensor, MPYA / M5DA NC (3 3/4" Wire Harness)	1	

© Whatever It Takes Transmission Parts. Inc.

PART #	ELECTRICAL COMPONENTS (Continued)	QTY.	REFERENCE #
70436C	Sensor, MPWA (Vigor) NC Speed Reads Off Countershaft	1	
70438B	Sensor, MPYA / M5DA NM (7 1/2" Wire Harness)	1	
70438C	Sensor, MPWA (Vigor) NM Speed Reads Off Mainshaft	1	
70446C	Wire Harness, MPWA (Vigor) Linear (22 1/2" Long) 2 Wire	1	

PART #	MISC. COMPONENTS	QTY.	REFERENCE #
70485B	Dowel Pins, MPYA / M5DA Rear Cover To Case (Hollow)	1-2	
80485S	Dowel Pin, MPWA (Vigor) Case To Rear Cover	1-2	
70494C	Tube, MPWA (Vigor) Oil Filter (11 1/8" Long) (7/8"OD At O-Ring)	1	
70496B	Cooler Line, MPYA / M5DA With 2 One Hole Brackets	1	
70496BA	Cooler Line, MPYA / M5DA With 1 Three Hole Bracket & 1 One Hole Bracket	1	
70496C	Cooler Line, MPWA (4" Long)	1	
70496CA	Cooler Line, MPWA (5" Long)	1	

PART #	HARD PARTS	QTY.	REFERENCE #
70500B	Pump Housing, MPYA (Use 70510B)	1	
70510B	Pump Housing, MPYA (PY4 Casting)	1	
70510C	Pump Houisng, MPWA (Vigor) (Cast # PW4)	1	
70510H	Pump Housing, M5DA (Cast # M5D)	1	
70529B	Converter Reactor, MPYA / M5DA (CASt # PY4)	1	
70529C	Converter Reactor, MPWA (Vigor) (Cast # W4)	1	
70530B	Pump Gear, MPYA / M5DA (19 Teeth & 29 Teeth) With 39 Splines	1	
60530C	Pump Gears, MPWA (Vigor) (38 Spline Gears) 28 Teeth (.470" Thick)	1	
80535	Pin, MPYA / M5DA Pump Gear	1	
70544B	Plate, MPYA Seperator Pump & Bell Housing	1	
70544C	Plate, MPWA (Vigor) Seperator Pump & Bell Housing	1	
70544H	Plate, M5DA Seperator Pump & Bell Housing	1	
70550B	Drum, MPYA 1st & 4th Clutch Mainshaft (Can Use 70550H)	1	
70550C	Drum, MPWA (Vigor) 2nd / 4th Clutch (4.960"OD)	1	
70550H	Drum, M5DA 1st & 4th (Mainshaft) (5.400"OD) Can Use 70550B	1	
70552B	Drum, MPYA 2nd Clutch (Mainshaft) (3.545"OD)	1	
70554B	Drum, MPYA / M5DA Low (Countershaft) (3.545"OD)	1	
70554C	Drum, MPWA (Vigor) Low Hold (Countershaft)	1	
70555B	Drum, MPYA 3rd Clutch (Countershaft) (5.410"OD)	1	
70555C	Drum, MPWA (Vigor) 3rd Clutch (4.965"OD) 10 Teeth Steels	1	
70555H	Drum, M5DA 3rd Clutch (Countershaft) (5.420"OD)	1	
70556B	Drum, MPYA Reverse (Countershaft)(5.413"OD)	1	
70556H	Drum, M5DA Reverse Clutch (5.425"OD)	1	
70557C	Drum, MPWA (Vigor) Low (Mainshaft) 10 Teeth Steels (4.965"OD)	1	
70560B	Piston Kit, MPYA 3rd & 4th Clutch	2	
70562B	Piston Kit, MPYA 1st Hold & 2nd Clutch	2	
70566B	Piston Kit, MPYA Reverse Clutch	1	
70574C	Low Hub, MPWA (Vigor) (Countershaft) 41 Teeth (3.383"OD)	1	

PART #	SPRAGS & ONE WAY CLUTCHES	QTY.	REFERENCE #
70652B	Sprag, MPYA / M5DA Low (Countershaft) 34 Lugs	1	
70652C	Sprag, MPWA (Vigor) Low (Countershaft) 28 Lugs (.820" Wide)	1	23423-PL5-J00
70654B	Sprag, MPYA / M5DA 2nd (Countershaft) 30 Lugs (.850" Wide)	1	
70662B	Inner Race, MPYA / M5DA Low Sprag Countershaft (3.115"OD)	1	

PART #	HARD PARTS (Continued)	QTY.	REFERENCE #
70672B	Mainshaft, MPYA (23 1/8" Long) #214 Bearing Is 1 1/8" Long) Will Retro An M5DA If #214 Is Sold With Shaft	1	
70672C	Mainshaft, MPWA (Vigor) 41 Teeth (1 Groove) 3.690"OD (18 5/8" Long)	1	
70672H	Mainshaft, M5DA (23 1/8" Long) #214 Bearing Is 3/4" Long (Will Retro Fit An MPYA If 2nd Is Sold With Shaft)	1	
70675B	Shaft, MPYA Secondary	1	
70675C	Shaft, MPWA (Vigor) Secondary (10 3/8" Long) 1.170"OD At Splines	1	
70676B	Countershaft, MPYA (38 Teeth) 18 1/2" Long	1	
70676C	Countershaft, MPWA (Vigor) 37 Teeth (16 1/4" Long) 6 Sets Of Splines	1	
70676H	Countershaft, M5DA (39 Teeth) 18 1/2" Long	1	
70689B	Plate, MPYA Countershaft Bearing	1	
70689C	Plate, MPWA (Vigor) Countershaft To Bell (Tin) Cast # PY4	1	
70690B	Gear, MPYA / M5DA Park With Inner Race Counter (21 Lugs)	1	
70690C	Gear, MPWA (Vigor) Park (10 Lugs) 1.125" Thick	1	

© Whatever It Takes Transmission Parts. Inc.

70694B	Retainer, MPYA / M5DA Holds Sprag Into Low Gear	1
70708B	Secondary Gear, MPYA (53 Teeth) No Groove (PY4 Casting)	1
70708C	Secondary Gear, MPWA (Vigor) 60 Teeth (5.940”OD)	1
70708H	Secondary Gear, M5DA (52 Teeth) 1 Groove (P5DA Casting)	1
70740B	Valve Body, MPYA (PY4 Casting) 3 Switch	1
70740C	Valve Body, MPWA (Vigor) (Cast # PW4 & HM4 On Servo Side)	1
70740H	Valve Body, M5DA (PD5 Casting) 3 Switch	1

PART #	VALVE BODY COMPONENTS	QTY.	REFERENCE #
70741B-1	Manual Valve, MPYA Valve Body (7 5/8” Long) 7 Bands	1	
70741H-1	Manual Valve, M5DA Vlave Body (7 5/8” Long) 5 Bands	1	
70746C	Plate, MPWA (Vigor) Solenoid To Valve Body Plate	1	

PART #	HARD PARTS (Continued)	QTY.	REFERENCE #
70750B	Bell Housing,MPYA (Cast # PY4) 5 3/4” Top Bolts	1	
70750C	Bell Housing, MPWA (Vigor) 4 7/8” Thick (3” Top Bolts)	1	
70750H	Bell Housing, M5DA (Cast # P5D) 5 3/4” Top Bolts	1	
70759B	Rear Cover, MPYA / M5DA (Cast # PY4)	1	
70759C	Rear Cover, MPWA (Vigor) (Cast # PW4)	1	
70760B	Case, MPYA (PY4 Casting) 14 Bolt Pan	1	
70760C	Case, MPWA (Vigor) 12 13/16” Long (16 Bolt Pan) 9 Bolt Rear Cover	1	
70760H	Case, M5DA (P5D Casting) 14 Bolt Pan	1	
70765B	Pan, MPYA/ M5DA Bottom (Aluminum) 14 Bolt (1 7/8” Deep)	1	
70765C-4	Skid Guard, MPWA (Vigor) Bottom Pan	1	
70771B	Plug, MPYA / M5DA Extention Housing (Allen Head) For Access To The Hidden Snap Ring (1.330”OD Threads)	1	
70776BK	Bolt Set, MPYA / M5DA Case To Bell Housing (16 Pieces)	1	
70776CK	Bolt Set, MPWA (Vigor) Case To Bell Housing (11 Pieces)	1	
70777BK	Bolt Set, MPYA / M5DA Pump To Bell	1	
70777CK	Bolt Set, MPWA (Vigor) Pump To Bell (5 Pieces)	1	
70779CK	Bolt Set, MPWA (Vigor) Pan To Case (16 Pieces)	1	
70780BK	Bolt Set, MPYA / M5DA Case To Rear Cover	1	
70780CK	Bolt Set, MPWA (Vigor) Rear Cover To Case (9 Pieces)	1	
70782BK	Bolt Set, MPYA / M5DA Valve Body To Case (7 Pieces)	1	
70783BK	Bolt Set, MPYA / M5DA Regulator To Case (18 Pieces)	1	
70784BK	Bolt Set, MPYA / M5DA Regulator To Bell (9 Pieces)	1	
70784CK	Bolt Set, MPWA (Vigor) Regulator To Bell (9 Pieces)	1	
70792CK	Bolt Set, MPWA (Vigor) 2nd Accumulator To Bell (6 Pieces)	1	
70793B	Plug, MPYA/ M5DA Axle Hole (2WD) (1/2” Square Drive) (1.407”OD Thread)	1	
80795	Nut, MPWA (Vigor) Mainshaft (Left Hand Thread (.435” Thick)	1	
70795B	Nut, MPYA / M5DA (Mainshaft) Right Hand Thread	1	
70796B	Nut, MPYA / M5DA (Countershaft) Left Hand Thread	1	
70798B	Nut, MPYA / M5DA Holds #410 To Linkage Shaft	1	
70799B	Bolt Set, MPYA / M5DA Idler Bracket To Rear Cover (2 Pieces) 2 1/16” Long	1	
70799C	Bolt Set, MPWA (Vigor) Idler Bracket (2 Pieces)	1	
70800B	Gear, MPYA Low (Mainshaft) 21 Teeth	1	
70800C	Gear, MPWA (Vigor) Low (Mainshaft) 17 Teeth (2.163”OD) 41 Clutch Splines	1	
70801B	Gear, MPYA Low (Countershaft) (52 Teeth) 45 Clutch Splines	1	
70801C	Gear, MPWA (Vigor) Low (Countershaft) 45 Teeth (1 Groove) (5.205”OD)	1	
70801H	Gear, M5DA Low (Countershaft) 59 Teeth (45 Clutch Splines)	1	
70803B	Gear, MPYA 2nd (Mainshaft) 31 Teeth (3.210”OD)	1	
70803C	Gear, MPWA (Vigor) 2nd (Mainshaft) 28 Teeth (1 Groove) 2.280” Tall	1	
70803H	Gear, M5DA 2nd (Mainshaft) 33 Teeth (3.210”OD)	1	
70804B	Gear, MPYA Low With Reverse Hub (Countershaft) 45 Teeth	1	
70804C	Gear, MPWA (Vigor) 2nd (Countershaft) 43 Teeth (4.380”OD)	1	
70804H	Gear, M5DA Low With Reverse Hub (Countershaft) 48 Teeth	1	
70806B	Gear, MPYA 3rd (Mainshaft) 38 Teeth	1	
70806H	Gear, M5DA 3rd (Mainshaft) 39 Teeth (3.965”OD)	1	
70807B	Gear, MPYA 3rd (Countershaft) .650” Thick At Teeth	1	
70807C	Gear, MPWA (Vigor) 3rd (Countershaft) 40 Teeth (3.600”OD)	1	
70807H	Gear, M5HA 3rd (Countershaft) 37 Teeth (.690” Thick At Teeth)	1	
70809B	Gear, MPYA 4th (Mainshaft) 46 Teeth (No Groove)	1	
70809C	Gear, MPWA (Vigor) 4th (Mainshaft) 49 Teeth (No Groove)	1	
70809H	Gear, M5DA 4th (Mainshaft) 46 Teeth (1 Groove)	1	
70810B	Gear, MPYA 4th (Countershaft) 49 Teeth	1	
70810C	Gear, MPWA (Vigor) 4th (Countershaft) 32 Teeth (1 Groove) 2.935”OD (1.495”ID)	1	
70810H	Gear, M5DA 4th (Countershaft) 30 Teeth (3.130”OD)	1	

© Whatever It Takes Transmission Parts. Inc.

PART #	HARD PARTS (Continued)	QTY.	REFERENCE #
70815B	Gear, M5DA 4th (Countershaft) 30 Teeth (3.130"OD)	1	
70815H	Gear, M5DA Reverse (Mainshaft) 25 Teeth	1	
70816B	Gear, MPYA Reverse (Countershaft) 38 Teeth (1.535"ID)	1	
70816C	Gear, MPWA (Vigor) Reverse (Countershaft) 40 Teeth (4.275"OD)	1	
70816H	Gear, M5DA Reverse (Countershaft) 47 Teeth	1	
70818B	Gear, MPYA Reverse Idler (20 Teeth)	1	
70818C	Gear, MPWA (Vigor) Reverse Idler (24 Teeth) Straight Teeth	1	
70818H	Gear, M5DA Reverse Idler (24 Teeth) Right Angle	1	
70819B	Pin, MPYA Reverse Idler (.705"OD)	1	
70820B	Bracket, MPYA / M5DA Reverse Idler (4 1/16" Long x 2" Wide)	1	
70820C	Bracket, MPWA (Vigor) Reverse Idler (Cast # PW4)	1	
70830C	Selector, MPWA (Vigor) Reverse (Countershaft) 2.593" (.550" Wide) (Right Angled & Pointed Selector Teeth)	1	
70835C	Hub, MPWA (Vigor) Reverse Selector (24 Teeth) .470" Thick (2.040"OD)	1	
70840C	Fork, MPWA (Vigor) Reverse (2.310"ID At Forks)	1	
70850B	Cushion, MPYA All Drums (.083" Thick) (Also M5DA 1st/2nd/3rd/4th Clutch)	1-6	
70850C	Cushion, MPWA (Vigor) Low / 2nd, 3rd / 4th And Low Hold Clutch (.071")	1-4	
70850CA	Cushion, MPWA (Vigor) Low / 2nd, 3rd / 4th And Low Hold Clutch (.075")	1-4	
70850CB	Cushion, MPWA (Vigor) Low / 2nd, 3rd / 4th And Low Hold Clutch (.078")	1-4	
70850H	Cushion, M5DA Reverse / Low Hold Clutch (.055" Thick)	1-2	
70861B	Snap Ring, MPYA / M5DA Holds Pressure Plates In All Drums	1-6	
60861C	Snap Ring, MPWA (Vigor) Holds Pressure Plate In 3rd Clutch	1	
90861E	Snap Ring, MPWA (Vigor) Holds Pressure Plate In Low Hold/2nd/3rd/4th Clutch (4.688"OD)	1-3	
80862	Snap Ring, MPYA/M5DA Holds 1st / 2nd / 3rd / 4th Reverse & Low Hold Clutch Retainer In	1-6	
70862C	Snap Ring, MPWA (Vigor) Holds 1st / 2nd / 3rd / 4th & Low Hold Clutch Retainer In	1-5	
70870B	Snap Ring, MPYA / M5DA Converter Reactor Inner (1.155"OD)	1	
70879B	Snap Ring, MPYA / M5DA Bearing To Mainshaft (.047" Thick)	1	
70881B	Snap Ring, MPYA / M5DA (Mainshaft) 1.125"OD (.039" Thick) Wire Type	1	
70881C	Snap Ring, MPWA (Vigor) Holds 4th Gear To Mainshaft (1.090"OD) .038" Wire Size	1	
70883B	Snap Ring, MPYA / M5DA Mainshaft Bearing To Case (.078" Thick) 3.300"OD	1	
60884CA	Snap Ring, MPWA (Vigor) Countershaft Bearing With 2.952"OD To Case	1	
70888B	Wire Snap Ring, MPYA Mainshaft	1	
70893B	Snap Ring, MPYA Holds Retainer	1	
70894B	Snap Ring, M9YA Holds Secondary Gear On Shaft	1	
70894C	Snap Ring, MPWA (Vigor) On Top Of Mainshaft Nut (1.580"OD) (.060" Thick)	1	
70895B	Wire Snap Ring, MPYA / M5DA / MPWA (Vigpr) Holds # 675 Into # 708	1	
70897C	Snap Ring, MPWA (Vigor) Holds Bell Housing Axle Seal In	1	
70900E2	Detent, MPYA Fork 2 Bolt (1 1/2" Tall)	1	
70924B	Regulator, MPYA (Cast PYA or Py4) With Plate	1	
70924C	Regulator, MPWA (Vigor) (Cast # PW4) 9 Bolt	1	
70924H	Regulator, M5DA (P5D Casting) With Plate	1	
70925C	Accumulator Assembly, MPWA (Vigor) Low (Cast # W7WC)	1	
70935B	Accumulator Body Assembly, MPYA Steel Bore Sleeve (No Casting #)	1	
70935C	Accumulator Body, MPWA (Vigor) (CASt # PW4) 6 Bolts To Bell	1	
70935H	Accumulator Body Assembly, M5DA Aluminum Bore (CASt # PD5)	1	
70950B	Accumulator Assembly, MPYA / M5DA 1st Hold (4 Pieces) In Rear Cover	1	
70950C	Accumulator Assembly, MPWA (Vigor) Low Hold (Cast # W4LH)	1	
70960B	Piston, MPYA 1st / 2nd / 3rd / 4th & Low Hold Clutch (Also M5DA 2nd & Low Hold Clutch)	1-5	
70960C	Piston, MPWA (Vigor) Low / 2nd / 3rd / 4th Clutch (4.552"OD) (.318" Thick At Edge)	1-4	
90960E	Piston, MPWA (Vigor) Low Hold Clutch (4.555"OD) (1.585"ID)	1	
70960H	Piston, M5DA 1st / 3rd / 4th Clutch (.362" Thick At Edge)	1-3	
70966B	Piston, MPYA / M5DA Reverse Clutch	1	
70967B	Piston, MPYA Reverse Clutch	1	
70967H	Piston, M5DA Reverse Clutch	1	
80970	Spring, MPYA 1st / 2nd / 3rd / 4th & Low Hold Clutch Return (Also M5DA 2nd & Low Hold Clutch Return)	1-5	
60970C	Spring, MPWA (Vigor) Low / 2nd / 3rd & 4th Clutch Return	1-4	
70970H	Spring, M5DA 1st / 3rd & 4th Clutch Return (1.310" Thick)	1-3	
70974C	Spring, MPWA (Vigor) Low Hold Clutch Return (2.500"OD)	1	
70976B	Spring, MPYA Reverse Clutch Return (2.553"OD)	1	
70976H	Spring, M5DA Reverse Clutch Return (2.605"OD)	1	
80980	Retainer, MPYA / M5DA 1st / 2nd / 3rd / 4th & Low Hold Clutch Spring	1-5	
70980B	Retainer, MPYA 1st / 1st Hold / 3rd / 2nd / 4th Clutch	5	
90980B	Retainer, MPYA / M5DA Reverse Clutch Spring	1	
70980C	Retainer, MPWA (Vigor Low / 2nd / 3rd / 4th (2.555"OD) (1.715"ID)	1-4	
70986B	Retainer, MPYA / M5DA Reverse Clutch	1	
70991B	Linkage, MPYA / M5DA Internal	1	
70991B-4	Shaft, MPYA Linkage (3 1/4" Long)	1	

© Whatever It Takes Transmission Parts. Inc.

70991C	Linkage, MPWA (Vigor) Internal	1
70991H-4	Shaft, M5DA Linkage (4 5/8” Long) With Threaded End	1
70995B	Park Pawl Assembly, MPYA / M5DA (3 Pieces)	1
70995C	Park Pawl Assembly, MPWA (Vigor) (3 Pieces)	1
70999B	Tube Set, MPYA / M5DA (10 Pieces)	1
70999C	Tube Set, MPWA (Vigor) (16 Pieces)	1

© Whatever It Takes Transmission Parts. Inc.

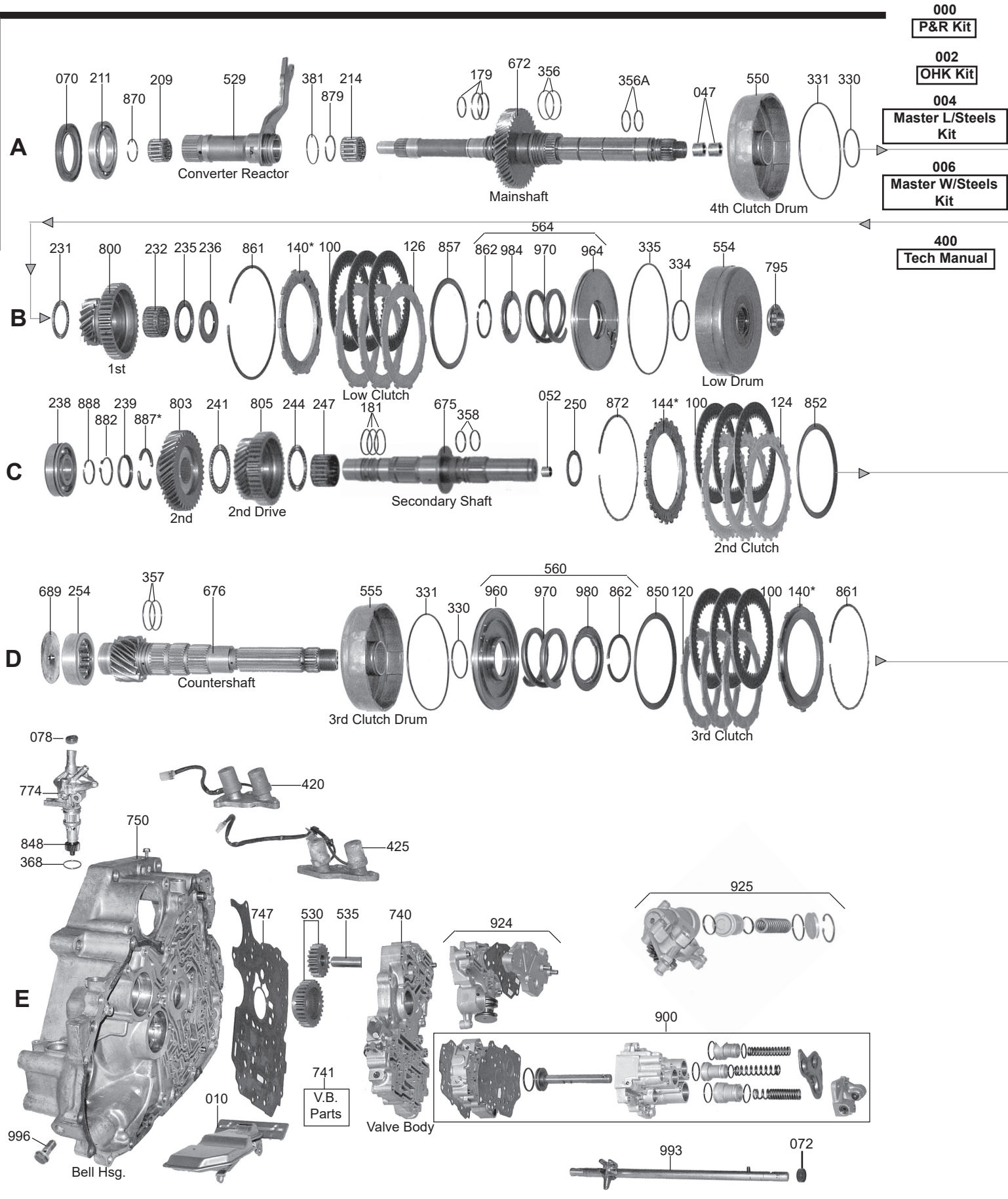

000 P&R Kit

002 OHK Kit

004 Master L/Steels Kit

006 Master W/Steels Kit

400 Tech Manual

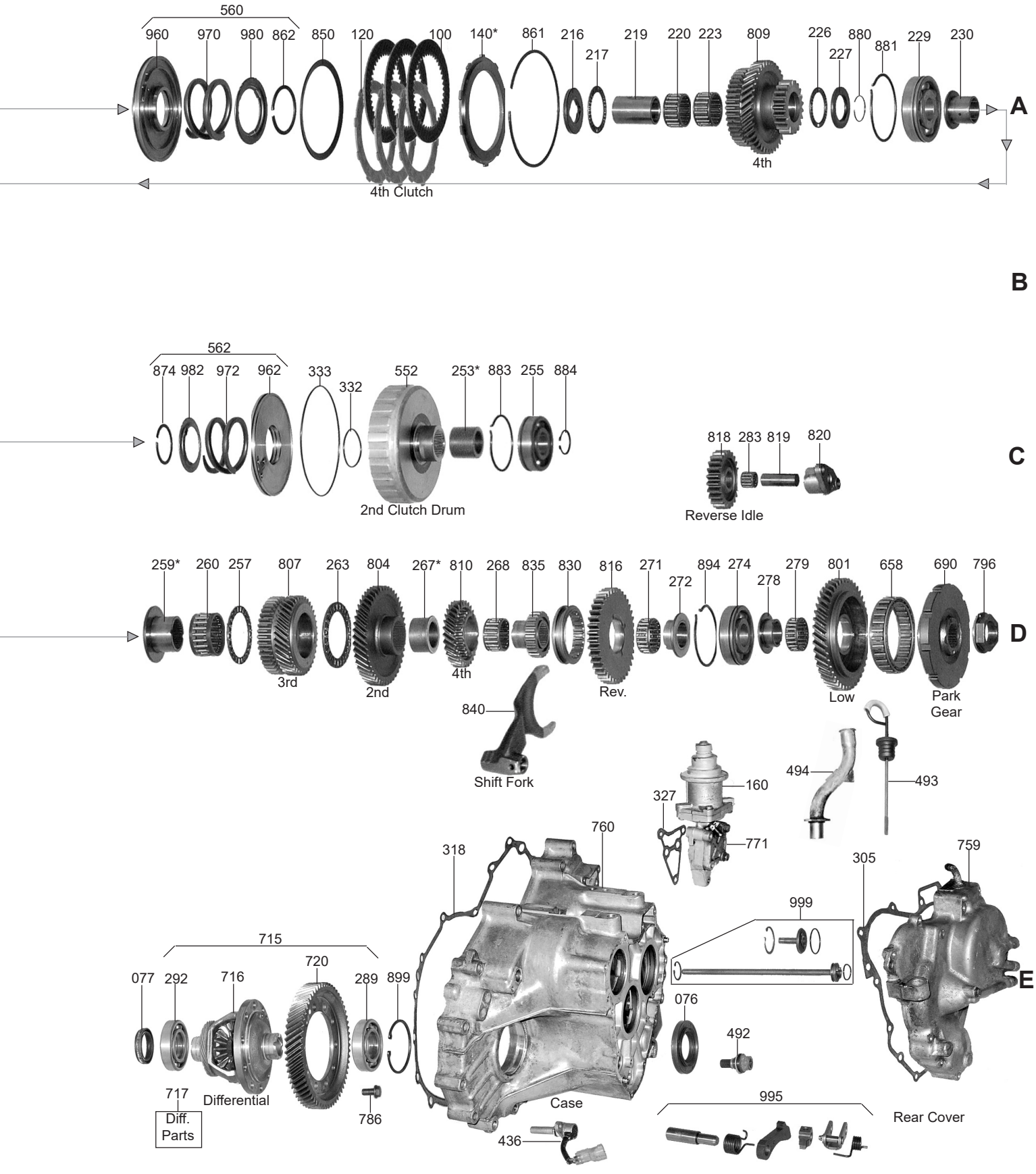

© Whatever It Takes Transmission Parts. Inc.

PART #	PAPER & RUBBER KIT	QTY.	REFERENCE #
170000A	Paper & Rubber Kit, RO / MPRA (Integra) 1990-93	1	

PART #	OVERHAUL KITS	QTY.	REFERENCE #
170002A	Overhaul Kit, RO / MPRA (Integra) 1990-93	1	

PART #	MASTER L/STEEL KIT	QTY.	REFERENCE #
170004A	Master L/Steels Kit, RO / MPRA (Integra) 1990-93	1	

PART #	MASTER W/STEEL KIT	QTY.	REFERENCE #
170006A	Master W/Steels Kit, RO / MPRA (Integr) 1990-93	1	

PART #	FILTER	QTY.	REFERENCE #
170010A	Filter, RO / MPRA (Integra) 1990-93	1	25420-PRO-030



170010A

70018CA	Screen, RO/MPRA (Some) Valve Body (.662"OD)(.315" Thick By Boot)	1	

PART #	METAL CLAD SEALS	QTY.	REFERENCE #
170070A	Seal, RO (Integra) Front 1990 (Use 60070A)	1	91207-POX-003
60070A	Seal, RO (Integra) Front (44x68x8mm) Counter Clockwise Helix 1990	1	
170070AA	Seal, MPRA (Integra) Front 1991-93	1	91207-PRO-003
60076G	Seal, RO / MPRA Right Axle (40 x 76 x 9mm) 1990-93	1	91206-PC8-005
60077H	Seal, RO / MPRA Bell Housing Axle Seal (40 x 56 x 9mm)	1	

PART #	FRICTION CLUTCH	QTY.	REFERENCE #
170100A	Friction, RO / MPRA (All Clutch Packs) (.077") (41 Teeth)	3-13	22544-PRO-850

PART #	STEEL CLUTCH	QTY.	REFERENCE #
170120AA	Steel, RO 2nd Clutch (.118" Thick) 24 Teeth (3.44"ID) 1990	3	22644-PRO-003
170120AB	Steel, MPRA 2nd Clutch (.079" Thick) 24 Teeth) (3.44"ID) 1991-93	3	22643-PRO-003
170120C	Steel, RO / MPRA 3rd / 4th Clutch (.079" Thick) 10 Teeth (3.44"ID) (Also RO / MPRA 1st Clutch)	3-9	22543-PF4-000
170124A	Steel, RO 2nd Clutch (.118" Thick) 24 Teeth (3.44"ID) 1990 (Use 170120AA)	3	
170124AB	Steel, MPRA 2nd Clutch (.079" Thick) 24 Teeth) (3.44"ID) 1991-93 (Use 170120AB)	3	
170126A	Steel, RO / MPRA 1st Clutch (.079" Thick) 10 Teeth (3.44"ID) (Use 170120C)	3	

PART #	CLUTCH PRESSURE PLATES	QTY.	REFERENCE #
60140C-1	Pressure Plate, RO / MPRA 1st / 3rd / 4th Clutch (3.44"ID) 10 Teeth (Stamped #1)	1-3	
60140C-2	Pressure Plate, RO / MPRA 1st / 3rd / 4th Clutch (3.44"ID) 10 Teeth (Stamped #2)	1-3	
60140C-3	Pressure Plate, RO / MPRA 1st / 3rd / 4th Clutch (3.44"ID) 10 Teeth (Stamped #3)	1-3	
60140C-4	Pressure Plate, RO / MPRA 1st / 3rd / 4th Clutch (3.44"ID) 10 Teeth (Stamped #4)	1-3	
60140C-5	Pressure Plate, RO / MPRA 1st / 3rd / 4th Clutch (3.44"ID) 10 Teeth (Stamped #5)	1-3	
60140C-6	Pressure Plate, RO / MPRA 1st / 3rd / 4th Clutch (3.44"ID) 10 Teeth (Stamped #6)	1-3	
60140C-7	Pressure Plate, RO / MPRA 1st / 3rd / 4th Clutch (3.44"ID) 10 Teeth (Stamped #7)	1-3	
60140C-8	Pressure Plate, RO / MPRA 1st / 3rd / 4th Clutch (3.44"ID) 10 Teeth (Stamped #8)	1-3	
60140C-9	Pressure Plate, RO / MPRA 1st / 3rd / 4th Clutch (3.44"ID) 10 Teeth (Stamped #9)	1-3	
60140C-10	Pressure Plate, RO / MPRA 1st / 3rd / 4th Clutch (3.44"ID) 10 Teeth (Stamped #10)	1-3	
170144AA	Pressure Plate, RO / MPRA 2nd Clutch (3.44"ID) 24 Teeth (Stamped # 1)	1	
170144AB	Pressure Plate, RO / MPRA 2nd Clutch (3.44"ID) 24 Teeth (Stamped # 2)	1	
170144AC	Pressure Plate, RO / MPRA 2nd Clutch (3.44"ID) 24 Teeth (Stamped # 3)	1	
170144AD	Pressure Plate, RO / MPRA 2nd Clutch (3.44"ID) 24 Teeth (Stamped # 4)	1	
170144AE	Pressure Plate, RO / MPRA 2nd Clutch (3.44"ID) 24 Teeth (No Stamped #) (.138")	1	
170144AF	Pressure Plate, RO / MPRA 2nd Clutch (3.44"ID) 24 Teeth (Stamped # 6)	1	

© Whatever It Takes Transmission Parts. Inc.

170144AG	Pressure Plate, RO / MPRA 2nd Clutch (3.44"ID) 24 Teeth (Stamped # 7)	1	
170144AH	Pressure Plate, RO / MPRA 2nd Clutch (3.44"ID) 24 Teeth (Stamped # 8)	1	
170144AJ	Pressure Plate, RO / MPRA 2nd Clutch (3.44"ID) 24 Teeth (Stamped # 9)	1	

PART #	WASHERS & BEARINGS	QTY.	REFERENCE #
60209A	Caged Needle Bearing, RO / MPRA Converter Reactor (Front)	1	
60211A	Ball Bearing, RO / MPRA Bell Housing To Converter (2.675"OD) (1.570"ID)	1	
80214	Caged Needle Bearing, RO / MPRA Converter Reactor (Rear)	1	
170216A	Race, RO / MPRA 4th Gear To 4th Drum (Mainshaft) (Use 60229G)	1	
170217A	Thrust Bearing, RO / MPRA Race To 4th Gear (Mainshaft) (Use 60232E)	1	
170219A	Collar, RO 4th Gear (1.990" Long) (Mainshaft)	1	
170219B	Collar, MPRA 4th Gear (1.830" Long) (Mainshaft)	1	
170220A	Caged Needle Bearing, RO Collar To 4th Gear (Mainshaft) (Use 60260A)	1	
170220B	Caged Needle Bearing, MPRA Collar To 4th Gear (Mainshaft) (Use 60260C)	1	
170223A	Caged Needle Bearing, RO / MPRA Collar To 4th Gear (Mainshaft) (Use 60260A)	1	
170226A	Thrust Bearing, RO / MPRA 4th Gear To Race (Mainshaft) (Use 60238A)	1	
170227A	Race, RO / MPRA 4th Gear To Wire Snap Ring (Mainshaft) (Use 60239A)	1	
170229A	Roller Bearing, RO / MPRA Mainshaft To Case (2.952"OD) (Use 60274CA)	1	
60229G	Race, RO / MPRA 4th Gear To 4th Drum (Mainshaft)	1	
170230A	Collar, RO / MPRA Ball Bearing To 1st Gear (Mainshaft) (Use 60243C)	1	
170231A	Washer, RO / MPRA Collar To 1st Gear (Mainshaft) (Use 90244B)	1	
170232A	Caged Needle Bearing, RO / MPRA 1st Gear (Mainshaft) (Use 60247A)	1	
90232B	Bearing, RO / MPRA 2nd Gear To 2nd Drive Gear (Secondary Shaft) (Also RO/MPRA 2nd Drive Gear to Secondary Shaft)	1-2	
60232E	Thrust Bearing, RO / MPRA Race To 4th Gear (Mainshaft)	1	
170235A	Thrust Bearing, RO / MPRA 1st Gear To Low Drum (Mainshaft) (Use 90251B)	1	
170236A	Race, RO / MPRA 1st Gear To Low Drum (Mainshaft) (Use 60252A)	1	
90236B	Caged Needle Bearing, RO 2nd Drive Gear To Secondary Shaft (1.770" Thick) (22 Rollers) (Also RO/MPRA 4th Gear (Counter Shaft)	1-2	
60238A	Thrust Bearing, RO / MPRA 4th Gear To Race (Mainshaft)	1	91018-P56-003
170238A	Roller Bearing, RO / MPRA Bell Housing To Secondary Shaft	1	
60239A	Race, RO / MPRA 4th Gear To Wire Snap Ring (Mainshaft)	1	
170239A	Race, RO / MPRA Snap Ring To Split Washer (Secondary Shaft)	1	
170241A	Bearing, RO / MPRA 2nd Gear To 2nd Drive Gear (Secondary Shaft) (Use 90232B)	1	
60243C	Collar, RO / MPRA Ball Bearing To 1st Gear (Mainshaft)	1	
170244A	Thrust Bearing, RO / MPRA 2nd Gear Drive To Secondary Shaft (Use 90232B)	1	
90244B	Washer, RO / MPRA Collar To 1st Gear (Mainshaft)	1	
60247A	Caged Needle Bearing, RO / MPRA 1st Gear (Mainshaft)	1	
170247A	Caged Needle Bearing, RO 2nd Drive Gear To Secondary Shaft (1.770" Thick) (22 Rollers) (Use 90236B)	1	
170247AB	Caged Needle Bearing, RO 2nd Drive Gear To Secondary Shaft (.930" Thick) (Use 90260B)	1	
170250A	Race, RO / MPRA 2nd Drum To Secondary Shaft	1	
90251B	Thrust Bearing, RO / MPRA 1st Gear To Low Drum (Mainshaft)	1	
60252A	Race, RO / MPRA 1st Gear To Low Drum (Mainshaft)	1	
170253AA	Collar, RO 2nd Drum To Bearing (.663" Thick) (Secondary Shaft)	1	
170253AB	Collar, RO 2nd Drum To Bearing (.665" Thick) (Secondary Shaft)	1	
170253AC	Collar, RO 2nd Drum To Bearing (.667" Thick) (Secondary Shaft)	1	
170253AD	Collar, RO 2nd Drum To Bearing (.669" Thick) (Secondary Shaft)	1	
170253AE	Collar, RO 2nd Drum To Bearing (.671" Thick) (Secondary Shaft)	1	
170253AF	Collar, RO 2nd Drum To Bearing (.673" Thick) (Secondary Shaft)	1	
170253AG	Collar, RO 2nd Drum To Bearing (.675" Thick) (Secondary Shaft)	1	
170253AH	Collar, RO 2nd Drum To Bearing (.677" Thick) (Secondary Shaft)	1	
170253AJ	Collar, RO 2nd Drum To Bearing (.679" Thick) (Secondary Shaft)	1	
170253AL	Collar, RO 2nd Drum To Bearing (.681" Thick) (Secondary Shaft)	1	
170253B	Collar, MPRA 2nd Drum To Bearing (1.145" Thick) (Secondary Shaft)	1	
60254D	Roller Bearing, RO / MPRA Bell Housing To Countershaft (2.442"OD)	1	
170255A	Roller Bearing, RO / MPRA Case To Secondary Shaft	1	
170257A	Bearing, RO / MPRA Thrust Collar To 3rd Gear (Countershaft)	1	
170259A	Collar With Race, RO / MPRA Counter Shaft To 3rd Gear	1	
60260A	Caged Needle Bearing, RO / MPRA Collar To 4th Gear # 223 (Mainshaft) (.930") (Also RO # 220)	1-2	
90260B	Caged Needle Bearing, MPRA 2nd Drive Gear #247 (1.460"OD)(.930" Thick)(Can Use 60260C)	1	
60260C	Roller Bearing, RO / MPRA 3rd Gear Countershaft (.930") (Also MPRA 4th Gear Mainshaft #220	1-2	91028-PF4-A01
170263A	Bearing, RO / MPRA Thrust Collar To 3rd Gear (Countershaft)	1	

© Whatever It Takes Transmission Parts. Inc.

PART #	WASHERS & BEARINGS (Continued)	QTY.	REFERENCE #
170267AA	Collar, RO / MPRA 2nd To 4th Gear (Countershaft) (.909” Thick)	1	
170267AB	Collar, RO / MPRA 2nd To 4th Gear (Countershaft) (.911” Thick)	1	
170267AC	Collar, RO / MPRA 2nd To 4th Gear (Countershaft) (.913” Thick)	1	
170267AD	Collar, RO / MPRA 2nd To 4th Gear (Countershaft) (.915” Thick)	1	
170267AE	Collar, RO / MPRA 2nd To 4th Gear (Countershaft) (.917” Thick)	1	
170267AF	Collar, RO / MPRA 2nd To 4th Gear (Countershaft) (.919” Thick)	1	
170267AG	Collar, RO / MPRA 2nd To 4th Gear (Countershaft) (.921” Thick)	1	
170268A	Caged Needle Bearing, RO / MPRA 4th Gear (Countershaft) (Use 90236B)	1	
170271A	Caged Needle Bearing, RO / MPRA Reverse Gear (Countershaft) (Use 90279B)	1	
170272A	Collar, RO / MPRA Reverse Gear (Countershaft) (Use 90278D)	1	
60274C	Ball Bearing, RO / MPRA Countershaft To Case (2.670”OD)	1	
60274CA	Ball Bearing, RO / MPRA Mainshaft To Case (2.952”OD)	1	
90278D	Collar W/Race, RO / MPRA Low Gear (Countershaft) (Also RO / MPRA Reverse Gear (Countershaft)	1-2	
90279B	Caged Needle Bearing, RO / MPRA Low Gear (Countershaft) (Also RO / MPRA Reverse Gear (Countershaft)	1-2	
80283	Cased Bearing, RO / MPRA Reverse Idler (14 Rollers)	1	

PART #	GASKETS & RUBBER COMPONENTS	QTY.	REFERENCE #
60313A	O-Ring, Honda Converter (OE Upgraded)(Fits On Converter Hub, Inside Of Drive Pump Gear)	1	

PART #	TECHNICAL MANUALS	QTY.	REFERENCE #
170400A	Technical Manual, RO (Integra) 1990	1	

PART #	ELECTRICAL COMPONENTS	QTY.	REFERENCE #
170420A	Solenoid Assembly, RO / MPRA Shift (On The Outside)	1	28200-PRO-010
170425A	Solenoid Assembly, RO / MPRA Lock-Up (On The Outside)	1	
170436A	Speed Sensor, RO/MPRA	1	

PART #	MISCELLANEOUS COMPONENTS	QTY.	REFERENCE #
60481E	Spring & Ball, RO/MPRA Reverse Idler	1	

PART #	HARD PARTS	QTY.	REFERENCE #
170529A	Converter Reactor, RO/MPRA	1	
60530C	Pump Gears, RO / MPRA (38 Spline Gear) 28 Teeth (.470” Thick)	1	
170550A	Drum, RO / MPRA 4th Clutch (Mainshaft) (Use 90555E)	1	
170552A	Drum, RO 2nd Clutch (Secondary Shaft) (1.455” Nose)	1	
170552B	Drum, MPRA 2nd Clutch (Secondary Shaft) (1.300” Nose)	1	
60554C	Drum, RO / MPRA Low Clutch (Mainshaft)	1	
90555E	Drum, RO / MPRA 3rd Clutch (Countershaft) (Also RO / MPRA 4th Clutch (Mainshaft)	1-2	

PART #	SPRAGS & ONE WAY CLUTCHES	QTY.	REFERENCE #
60658C	Sprag, RO / MPRA Low (Countershaft)	1	

PART #	HARD PARTS (Continued)	QTY.	REFERENCE #
170672A	Shaft, MPRA Main (39 Teeth) No Groove	1	
170672AA	Shaft, RO Main (34 Teeth) No Groove	1	
170672AB	Shaft, RO Main (32 Teeth) 1 Groove	1	
170675A	Shaft, RO Secondary (.195” Thick Flange)	1	
170675AA	Shaft, MPRA Secondary (.158” Thick Flange)	1	
170676A	Countershaft, RO / MPRA (14 Teeth)	1	
60689A	Plate, RO/MPRA Oil Guide	1	
60690E	Gear, RO / MPRA Park (Countershaft) (10 Lugs) 4 3/8”OD (3/8” Thick Lugs)	1	
170715A	Differential, RO (62 Teeth) 1 Groove (With Ball Bearings)	1	
170715AA	Differential, RO / MPRA (62 Teeth) 2 Groove (With Ball Bearings)	1	
170740A	Valve Body, RO / MPRA Less Pump Gears	1	
170747A	Plate, RO Valve Body Seperater Plate	1	
170747B	Plate, MPRA Valve Body Seperator Plate	1	
170750A	Bell Housing, RO	1	
170750B	Bell Housing, MPRA	1	
170759A	Rear Cover W/Tubes, RO / MPRA	1	

© Whatever It Takes Transmission Parts. Inc.

170760A	Case, RO / MPRA Main	1	
170776AK	Bolt Set, RO / MPRA Holds Case To Bell Housing	1	
170780AK	Bolt Set, RO / MPRA Holds Rear Cover To Case	1	
170782AK	Bolt Set, RO / MPRA Holds Servo To Valve Body (12 Bolts)	1	
30782K	Bolt Set, RO / MPRA Valve Body To Bell (4 Bolts)	1	
60795A	Nut, RO / MPRA Mainshaft (Left Hand Threads)	1	
60796E	Nut, RO / MPRA Countershaft (.845"ID) (Right Hand Threads)	1	90202-PF4-010
170800A	Gear, RO 1st (Mainshaft) (17 Teeth) (No Groove)	1	293407
170800B	Gear, MPRA 1st (Mainshaft) (17 Teeth) (1 Groove)	1	
170801A	Gear, MPRA 1st (Countershaft) (45 Teeth, 1 Groove)	1	
60801E	Gear, RO 1st (Countershaft) (45 Teeth, 4 Groove)	1	
170803A	Gear, RO 2nd (Secondary Shaft) (34 Teeth)	1	
170803AA	Gear, MPRA 2nd (Secondary Shaft) (39 Teeth)	1	
170803AB	Gear, RO 2nd (Secondary Shaft) (32 Teeth)	1	
170804A	Gear, RO 2nd (Countershaft) (40 Teeth) 1990	1	317973
170804AB	Gear, MPRA 2nd (Countershaft) (46 Teeth) 1991-93	1	358150
170805A	Gear, RO 2nd Drive (Secondary Shaft) (27 Teeth, No Groove)	1	
170805AA	Gear, RO 2nd Drive (Secondary Shaft) (26 Teeth, 1 Groove)	1	
170805AB	Gear, MPRA 2nd Drive (Secondary Shaft) (31 Teeth, No Groove)	1	
170807A	Gear, RO 3rd (Countershaft) (33 Teeth) 1990	1	
170807AA	Gear, MPRA 3rd (Countershaft) (38 Teeth) 1991-93	1	358154
170809A	Gear, RO 4th (Mainshaft) (40 Teeth) (2.620" Tall)	1	
170809AA	Gear, MPRA 4th (Mainshaft) (40 Teeth) (2.450" Tall)	1	
170809AB	Gear, RO 4th (Mainshaft) (37 Teeth)	1	
170810A	Gear, RO / MPRA 4th (Countershaft) (29 Teeth)	1	
170810AA	Gear, RO 4th (Countershaft) (30 Teeth)	1	
170816A	Gear, RO / MPRA Reverse (Countershaft) (40 Teeth)	1	
60818C	Gear, RO / MPRA Reverse Idler (24 Teeth)	1	
60819E	Pin, RO / MPRA Reverse Idler Support	1	
60820E	Bracket, RO / MPRA Reverse Idler	1	
60830CA	Selector, RO / MPRA Reverse (Countershaft) (2.275"OD Where Fork Rides) (Left Angled Teeth On Reverse Side, Pointed Teeth On 4th Gear Side)	1	
170835A	Hub, RO / MPRA Reverse (Countershaft)	1	
170840A	Shift Fork, RO / MPRA	1	
170850AA	Cushion, RO/MPRA (Replaces Belleville Spring)	1	
60850C	Cushion, RO / MPRA 2nd / 3rd / 4th Clutch (4.200"OD) (.078" Thick) (Waved Replaces Beveled Cushion)	1-3	
90850H	Cushion, RO/MPRA 4th Clutch (4.200"OD)(.072" Thick)	1	
170852A	Cushion, RO / MPRA 2nd Clutch (Use 60850C)	1	
170857A	Cushion, RO / MPRA Low Clutch	1	
60861C	Snap Ring, RO / MPRA Holds 4th Clutch Pressure Plate In Drum	1	
90861E	Snap Ring, RO / MPRA Holds Low / 2nd / 3rd Pressure Plate In Drum (4.688"OD)	1-3	
90862B	Snap Ring, RO / MPRA Low / 3rd Clutch (1.780"OD) (.145" Thick ID To OD) (Also MPRA 2nd Clutch)	1-3	
90862E	Snap Ring, RO / MPRA 4th Clutch (1.810"OD) (.097"Thick ID To OD)	1	
60870A	Snap Ring, RO/MPRA Snap Ring Holds #209 In Converter Reactor On Various Hondas	1	
170872A	Snap Ring, RO / MPRA Holds 2nd Clutch Pressure Plate In Drum (Use 90861E)	1	
170874A	Snap Ring, RO 2nd Clutch	1	
170874B	Snap Ring, MPRA 2nd Clutch (Use 90862B)	1	
60879C	Snap Ring, RO / MPRA Holds Caged Bearing To Mainshaft (Front)	1	
170880A	Wire Snap Ring, RO / MPRA Holds 4th Gear To Mainshaft (Use 60881A)	1	
60881A	Wire Snap Ring, RO / MPRA Holds 4th Gear To Mainshaft	1	
170881A	Snap Ring, RO / MPRA Holds Mainshaft Bearing To Case (Use 60884CA)	1	
170882A	Snap Ring, RO / MPRA Holds Race To Secondary Shaft	1	
60883C	Snap Ring, RO / MPRA Holds Secondary Shaft Bearing To Case	1	
170884A	Snap Ring, RO / MPRA Holds Bearing To Secondary Shaft	1	
60884C	Snap Ring, RO / MPRA Holds Countershaft Bearing To Case	1	
60884CA	Snap Ring, RO / MPRA Holds Mainshaft Bearing To Case	1	
170887AA	Split Washer, RO / MPRA Secondary Shaft (.079") (2 Per Pack)	1	
170887AB	Split Washer, RO / MPRA Secondary Shaft (.080") (2 Per Pack)	1	
170887AC	Split Washer, RO / MPRA Secondary Shaft (.081") (2 Per Pack)	1	
170887AD	Split Washer, RO / MPRA Secondary Shaft (.082") (2 Per Pack)	1	
170894A	Snap Ring, RO Holds Countershaft Bearing To Case (Use 60884C)	1	
90899BA	Snap Ring, RO/MPRA Differential Bearing To Case (.106")	1	
90899BB	Snap Ring, RO/MPRA Differential Bearing To Case (.108")	1	
90899BC	Snap Ring, RO/MPRA Differential Bearing To Case (.110")	1	
90899BD	Snap Ring, RO/MPRA Differential Bearing To Case (.112")	1	
90899BE	Snap Ring, RO/MPRA Differential Bearing To Case (.114")	1	
170900A	Servo Body Assembly, RO / MPRA	1	
170924A	Regulator, RO / MPRA	1	

© Whatever It Takes Transmission Parts. Inc.

PART #	HARD PARTS (Continued)	QTY.	REFERENCE #
170925A	Accumulator Assembly, RO / MPRA (Secondary Shaft Runs Through Body)	1	
90960E	Piston, RO / MPRA Low / 3rd / 4th Clutch (4.555”OD) (1.585”ID) (Also MPRA 2nd Clutch)	1-4	
170962A	Piston, RO 2nd Clutch	1	
170964A	Piston, RO / MPRA Low Clutch (Use 90960E)	1	
90970B	Spring, RO / MPRA Low / 4th Clutch (2.450”OD) (.238”OD Of Wire) (Also MPRA 2nd Clutch)	1-3	
90970BB	Spring, RO / MPRA 3rd Clutch (2.465”OD) (.268”OD Of Wire) Gold Colored Square Wire	1	
170972A	Spring, RO 2nd Clutch Return	1	
170972B	Spring, MPRA 2nd Clutch Return (Use 90970B)	1	
90980B	Retainer, RO / MPRA 3rd / 4th Clutch (2.450”OD) (1.600”ID) (Also MPRA 2nd Clutch)	1-3	
90980E	Retainer, RO / MPRA Low Clutch	1	
170982A	Retainer, RO 2nd Clutch Return	1	
170982B	Retainer, MPRA 2nd Clutch Return (Use 90980B)	1	
170993A	Shift Rod, RO / MPRA (Internal)	1	
170995A	Park Pawl Assembly, RO / MPRA	1	
80996	Fitting, RO / MPRA Cooler Line (1 1/2” Long) Holds Cooler Line To Bell	1	
80996A	Fitting, RO/MPRA Cooler Line (4 5/8” Long)	1	

© Whatever It Takes Transmission Parts. Inc.

© Whatever It Takes Transmission Parts. Inc.

PART #	PAPER & RUBBER KIT	QTY.	REFERENCE #
140000A	Paper & Rubber Kit, M4VA (CVT) (Civic HX) 1996-00	1	

PART #	OVERHAUL KITS	QTY.	REFERENCE #
140002A	Overhaul Kit, M4VA (CVT) (Civic HX) 1996-00	1	
140002B	Overhaul Kit, MLYA / SLYA (CVT) (Civic HX) 2001-05	1	

PART #	MASTER L/STEEL KIT	QTY.	REFERENCE #
140004A	Master L/Steels Kit, M4VA (CVT) (Civic HX) 1996-00	1	
140004B	Master L/Steels Kit, MLYA / SLYS (CVT) (Civic HX) 2001-05	1	

PART #	MASTER W/STEEL KIT	QTY.	REFERENCE #
140006A	Master W/steels Kit, M4VA (CVT) (Civic HX) 1996-00	1	
140006B	Master W/Steels Kit, MLYA / SLYA (CVT) (Civic HX) 2001-05	1	

PART #	FILTER	QTY.	REFERENCE #
140010A	Filter, M4VA (CVT)(Civic HX) Main 1996-Up	1	
140010B	Filter, MLYA/SLYA (CVT) 2001-Up	1	
140013A	Filter, M4VA (CVT) (Civic HX) Cartridge Type 1996-00	1	

PART #	FRICTION CLUTCH	QTY.	REFERENCE #
140119A	Friction Module, M4VA/MLYA/SLYA (CVT) 1996-Up	1	

PART #	HARD PARTS	QTY.	REFERENCE #
140700A	Belt, M4VA/MLYA/SLYA (CVT)	1	
140740A	Valve Body, M4VA (CVT) 4 Switch (7 Prong Connector) 2 Bolts On Each Switch	1	
140750A	Bell Housing, M4VA (CVT) 5 3/8” Top Bolts	1	
140755A	Channel Plate, M4VA (CVT) 16 Bolts	1	
140759A	Rear Cover, M4VA (CVT) 14 Bolts (With Tubes) 2 Threaded Bosses	1	
140760A	Case, M4VA (CVT) 14 Pan Bolts	1	
140765A	Pan, M4VA (CVT) 14 Bolt (Aluminum) 3 Bolt Filter Bore (3 Magnets)	1	

© Whatever It Takes Transmission Parts. Inc.

PART #	PAPER & RUBBER KIT	QTY.	REFERENCE #
178000	Paper & Rubber Kit, Honda 2 Speed 1973-80	1	

PART #	OVERHAUL KITS	QTY.	REFERENCE #
178002	Overhaul Kit, Honda 2 Speed 1973-80	1	

PART #	MASTER L/STEEL KIT	QTY.	REFERENCE #
178004	Master L/Steels Kit, Honda 2 Speed 1973-80	1	

PART #	MASTER W/STEEL KIT	QTY.	REFERENCE #
178006	Master W/Steels Kit, Honda 2 Speed 1973-80	1	

PART #	FILTER	QTY.	REFERENCE #
178010	Filter, Honda 2 Speed 1973-80	1	25420-639-000

PART #	METAL CLAD SEALS	QTY.	REFERENCE #
60070A	Seal, Honda 2 Speed Front	1	91307-639-015
60072	Seal, Honda 2 Speed Linkage	1	90311-12002
150074	Seal, Honda 2 Speed Left Angle	1	91205-639-005
150076	Seal, Honda 2 Speed Right Axle	1	91206-639-005
150078	Seal, Honda 2 Speed Speed-O Gear	1	92108-551-015

PART #	FRICTION CLUTCH	QTY.	REFERENCE #
178106	Friction, Honda 2 Speed Low & Drive Clutch 1973-80	4-8	22535-639-010

PART #	STEEL CLUTCH	QTY.	REFERENCE #
178126	Steel, Honda 2 Speed Low & Drive Clutch 1973-80	4-8	22536-639-000

PART #	CLUTCH PRESSURE PLATES	QTY.	REFERENCE #
178146A	Pressure Plate, Honda 2 Speed Low & Drive Clutch (# 1) (1.8MM)	1	
178146AA	Pressure Plate, Honda 2 Speed Low & Drive Clutch (# 2) (2.1MM)	1	
178146AB	Pressure Plate, Honda 2 Speed Low & Drive Clutch (# 3) (2.4MM)	1	
178146AC	Pressure Plate, Honda 2 Speed Low & Drive Clutch (# 4) (2.7MM)	1	
178146AD	Pressure Plate, Honda 2 Speed Low & Drive Clutch (# 5) (3.0MM)	1	
178146AE	Pressure Plate, Honda 2 Speed Low & Drive Clutch (# 6) (3.3MM)	1	

PART #	OIL SEALING RINGS	QTY.	REFERENCE #
178175	Ring Kit, Honda 2 Speed 1973-80	1	
178178	Ring, Honda 2 Speed Mainshaft 1973-80	1	23122-639-003
178179	Ring, Honda 2 Speed Low & Drive Clutch 1973-80	2-4	22628-639-003

PART #	TECHNICAL MANUALS	QTY.	REFERENCE #
178400	Technical Manual, Honda 2 Speed	1	83-HDA2SPDTM

© Whatever It Takes Transmission Parts. Inc.

PART #	PAPER & RUBBER KIT	QTY.	REFERENCE #
190000A	Paper & Rubber Kit, MR9A (Acura NSX) 1991-00	1	

PART #	OVERHAUL KITS	QTY.	REFERENCE #
190002A	Overhaul Kit, MR9A (Acura NSX) 1991-00	1	

PART #	MASTER L/STEEL KIT	QTY.	REFERENCE #
190004A	Master L/Steels Kit, MR9A (Acura NSX) 1991-00	1	

PART #	MASTER W/STEEL KIT	QTY.	REFERENCE #
190006A	Master W/Steels Kit, MR9A (Acura NSX) 1991-00	1	

PART #	FILTER	QTY.	REFERENCE #
190010A	Filter, MR9A (Acura NSX) 1991-00	1	

PART #	FRICTION CLUTCH	QTY.	REFERENCE #
190100A	Friction, MR9A (NSX) 4th Clutch (.091") 44 Teeth (4.70"OD)	5	
190108A	Friction, MR9A (NSX) Low Clutch (.075") 41 Teeth (4.56"OD)	5	
190104A	Friction, MR9A (NSX) Low Hold, 2nd & 3rd Clutch (.075") 44 Teeth (4.70"OD)	3-13	
190119AS1	Friction Module, MR9A 1991-06 (Stage 1)	1	

© Whatever It Takes Transmission Parts. Inc.

© Whatever It Takes Transmission Parts. Inc.

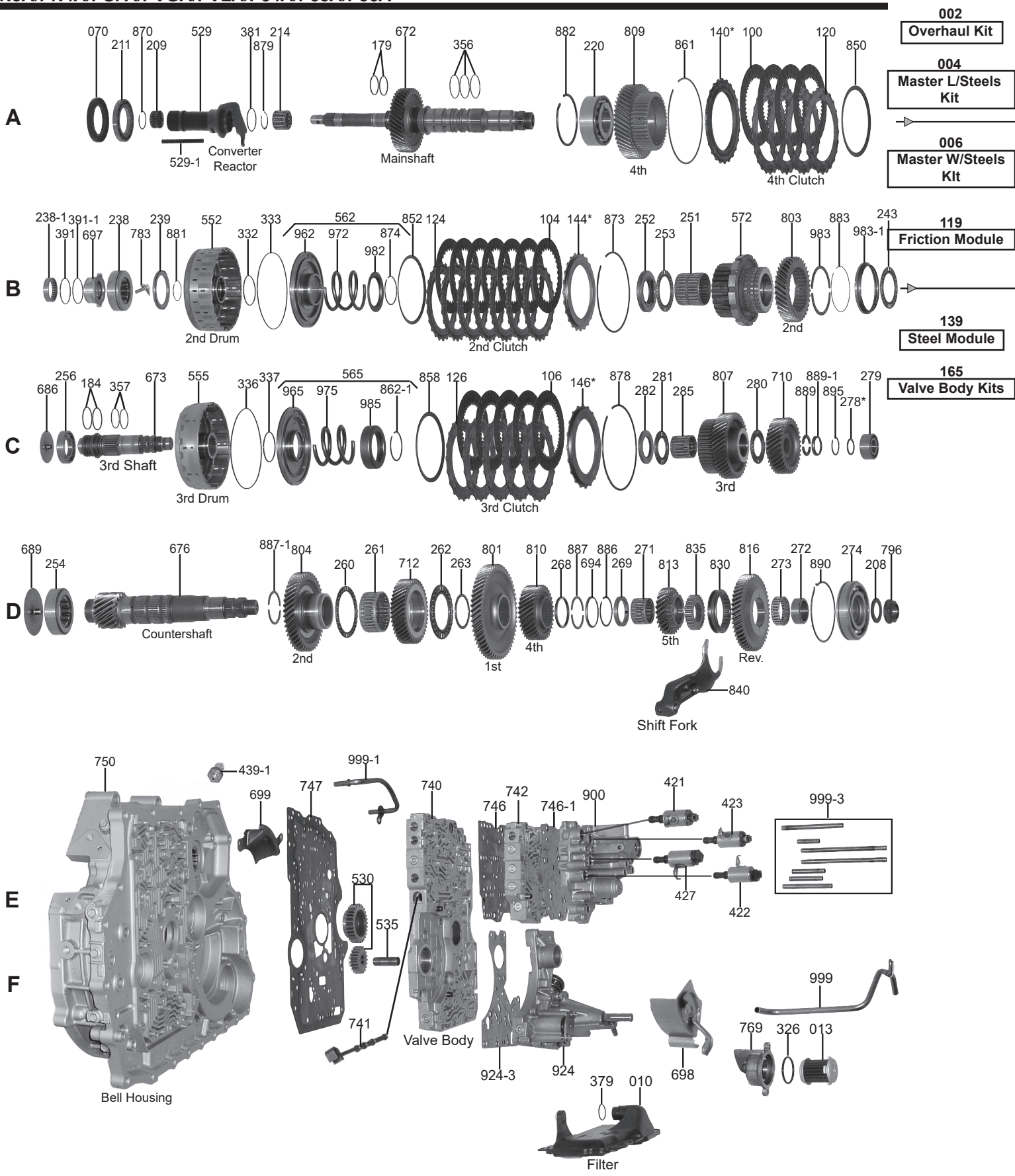

© Whatever It Takes Transmission Parts, Inc.

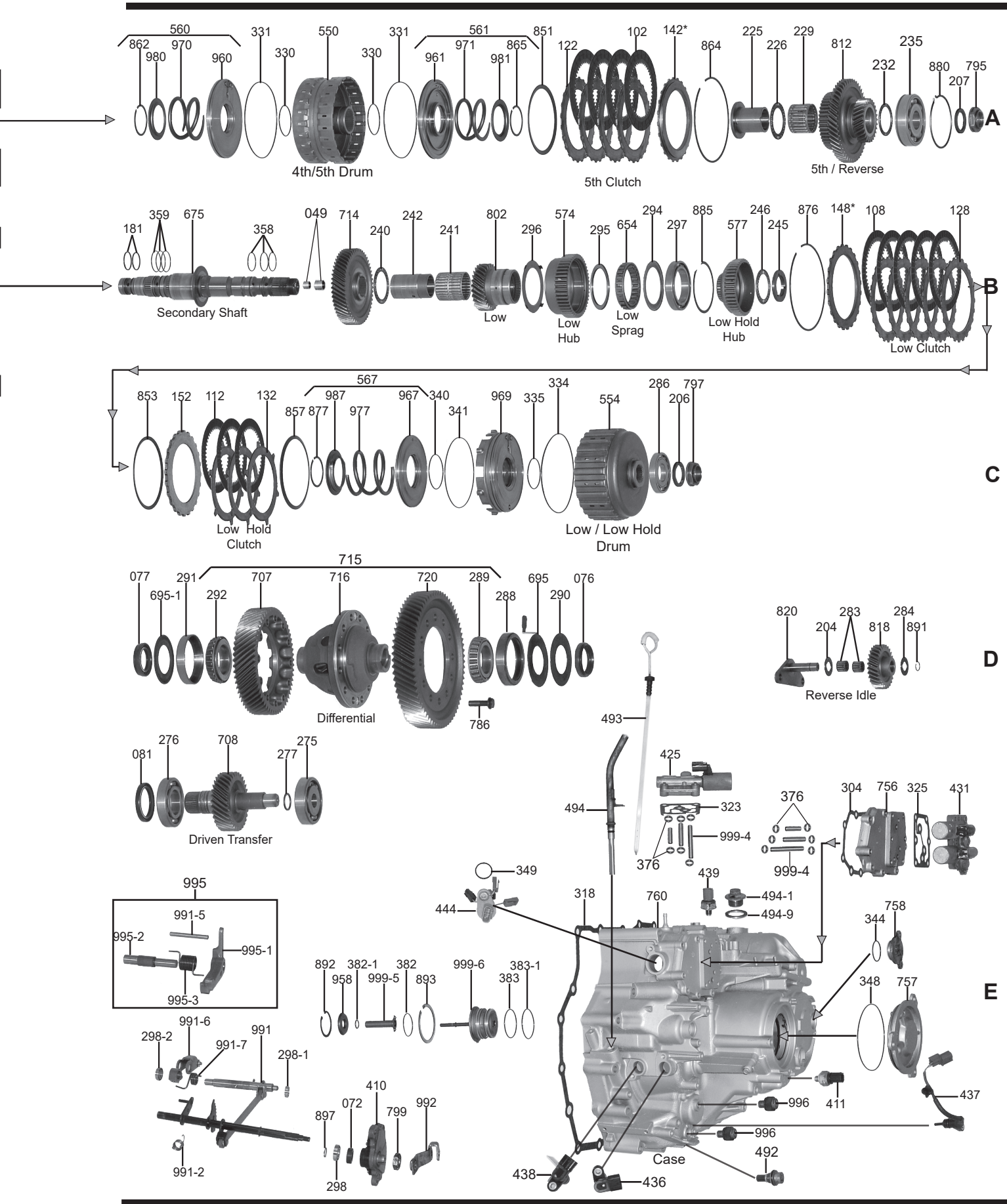

1-800-940-0197

© Whatever It Takes Transmission Parts, Inc.

PART #	OVERHAUL KITS	QTY	REFERENCE #
20001V	Sub Kit, BDKA/BJFA/BK4A/BVLA/BWEA/MDKA/MDRA/MJBA/MJFA/MYFA/PSFA/PVLA/P34A/P35A Transfer Case Parts	1	
40002A	Overhaul Kit, BDKA/BJFA/BVLA/BWEA/MDKA MDPA/MDRA/MJBA/MJFA/MYFA/ PVLA/P34A/P35A 2003-Up (For Transfer Case Parts Sell T20001V Also)	1	
40002B	Overhaul Kit, BBSA/BDGA-1/BDGA-9/BK3A/B36A/B97A/MM2A/PN4A/P36A/P79A 2007-Up	1	
40002D	Overhaul Kit, BBTA/BYFA/BK4A/PN3A/PSFA 2007-Up	1	
40002G	Overhaul Kit, MURA (Accord, Hybrid 3.0L) 2005-06	1	
20002V	Overhaul Kit, BDKA/BJFA/BVLA/BWEA/MDKA/MDPA/MDRA/MJBA/MJFA/MYFA/PVLA/P34A/P35A (For Transfer Case Parts Sell T20001V Also)	1	

PART #	MASTER L/STEELS KITS	QTY	REFERENCE #
40004A	Master L/Steels Kit, BDKA/MDKA/MDPA/MDRA 2003-08 (For Transfer Case Parts Sell T20001V Also)	1	
40004B	Master L/Steels Kit, BDHA/B36A/P36A 2007-08 (Also Fits B97A 2008, PN4A 2009-10)(BDGA-9 2007)(With GPX Frictions)	1	
40004BA	Master L/Steels Kit, B36A/P36A 2009-10 (W/GPX Friction)(Also Fits PN4A 2011-Up, BDHA 2007-08, BDGA-1/BDGA-9 2007-08, B97A 2010-11)	1	
40004BC	Master L/Steels Kit, BK3A 2009-11 (With GPX Frictions)	1	
40004D	Master L/Steels Kit, BBTA/BYFA 2007-09 (With GPX Frictions)	1	
40004DB	Master L/Steels Kit, PN3A 2009-10 (With GPX Frictions)	1	
40004DBA	Master L/Steels Kit, (PN3A 2011-Up)/(PSFA 2009-Up) (With GPX Frictions)	1	
40004E	Master L/Steels Kit, MJBA 2009-10 (With GPX Frictions)	1	
40004H	Master L/Steels Kit, BVLA/BVGA-8 2006-07 (With GPX Frictions)(Also Fits MJBA 2005-08, BJFA/MJFA 2006-08, P34A/P35A 2008)	1	
40004HA	Master L/Steels Kit, BWEA 2007-11 (With GPX Frictions)	1	

PART #	MASTER L/STEELS KITS	QTY	REFERENCE #
40006A	Master W/Steels Kit, BDKA/MDKA/MDPA/MDRA 2003-08 (For Transfer Case Parts Sell T20001V Also)	1	
40006B	Master W/Steels Kit, B36A/P36A 2007-Up (W/GPX Frictions)(Also Fits PN4A 2009-10)	1	
40006BA	Master W/Steels Kit, B97A 2008 (With GPX Frictions)(Also Fits BDHA 2007-08, BDGA-1/BDGA-9 2007-08)	1	
40006D	Master W/Steels Kit, BBTA/BYFA 2007-09 (With GPX Frictions)	1	
40006DB	Master W/Steels Kit, PN3A 2009-10 (With GPX Frictions)	1	
40006E	Master W/Steels Kit, BJFA/MJFA 2006-08 (With GPX Frictions)	1	
40006H	Master W/Steels Kit, BVLA/P34A/P35A 2007-08	1	
40006HA	Master W/Steels Kit, BWEA 2007-11 (With GPX Frictions)	1	

PART #	FILTERS	QTY	REFERENCE #
40010A	Filter, BDKA/BJFA/MDKA/MDRA/MJFA 2003-Up	1	25420-RDK-013
40010B	Filter, BBSA/BDGA-1/BDGA-9/BDHA/BK3A/B36A/B97A/MM2A/PN4A/P36A 2007-11	1	25420-R36-003
40010BA	Filter, BBTA/PN3A/PN4A/PFSA 2006-11	1	
40010D	Filter, BYFA/BWEA/BT3A/MJBA 2005-11	1	25420-RWE-014
40010E	Filter, BVGA-8/BVLA/MDPA/P34A/P35A/PVGA-5 2002-Up	1	
40010EA	Filter, MJBA (Acura RL 5 Speed) 2005-08	1	
40010G	Filter, MURA 2005-Up	1	
140013A	Filter, BDGA/BK3A/BK4A/BYFA/B36A/B79A/B97A/MDKA/MDPA/MDRA/MJBA/MM2A/PN3A/PN4A/P36A (CVT) (Cartridge Type)	1	25450-P4V-003
70018CA	Screen, Some Honda 40 Series (In Valve Body) (.662" OD)(.315" Thick Rubber Boot)	1	

PART #	BUSHINGS	QTY	REFERENCE #
40030A	Bushing Kit, MDKA/BYFA/B97A/MJFA/PSFA/B36A/P36A	1	
40049-1A	Bushing, BJFA/BVLA/BYFA/B36A/B97A/MDKA/MDPA/MDRA/MURA/P36A Secondary Shaft (Small, Inner)(.238"ID)(Brass)	1	
40049A	Bushing, BJFA/BVLA/BYFA/B36A/B97A/MDKA/MDPA/MDRA/MURA/P36A Secondary Shaft (Large, Outer)(.455"ID)(Babbit)	1	
T-28999	Tool Set, Acura/Honda(22 Pcs Bushing Remover & Installer) (This Set Works For All Honda's W/Bushings)	1	

PART #	METAL CLAD SEALS	QTY	REFERENCE #
70070B	Seal, BDHA/BDKA/BJFA/BVLA/BWEA/BYFA/B36A/MDKA/MDPA/MDRA/MJBA/MJFA/PVGA/PVLA/P34A/P35A/P36A Converter (46X70X8mm)	1	91207-PR9-003
60072	Seal, Honda 40 Series Manual Shaft	1	

© Whatever It Takes Transmission Parts, Inc.

40076A ..... Seal, BYFAB36A/MDKA/MDPA/MDRA/P36A Axle (Case Side)(.485"Thick)(2.220"OD) (1.545"ID) ..... 1 ..... 91205-POX-005
40077A ..... Seal, BYFA/B36A/MDKA/MDPA/MDRA/P36A Axle (Bell Housing Side)(.450"Thick)(2.132"OD) (1.300"ID) ..... 1 ..... 91206-POZ-005
40081A ..... Seal, BYFA/MDKA/MDPA Transfer Driven Gear To Bell Housing (.320"Thick)(2.565"OD) (1.825"ID) ..... 1 ..... 91201-RDK-003

PART #	FRICTIONS	QTY	REFERENCE #
40100A	Friction, BDKA/MDKA/MDPA/MDRA 4th Clutch (.076")(44Teeth)(5.115"OD) 2003-08 (Also Fits BDKA/MDKA/MDPA/MDRA 5th Clutch # 102)	5	22645-RDK-003
40100B	Friction, BJFA/BVLA/BYFA/B36A/MDKA/MDPA/MDRA/MURA/P36A 4th Clutch (.077"Thick) (44 Teeth)(5.217"OD)(3.352"ID) 2003-Up (Also Fits B97A 2008-09)(Also Fits PN3A/PN4A 4th Clutch)	5	22645-RWE-003
40100BA	Friction, B36A/P36A 4th Clutch (.076" Thick)(32 Teeth)(5.225"OD) 2009-Up (Also Fits B36A/P36A 5th Clutch)	5	
40100BB	Friction, B97A 4th Clutch (.076" Thick)(32 Teeth)(5.225"OD) 2010-Up	4	
40100E	Friction, BJFA/MJBA/MJFA 4th Clutch (.077" Thick)(44 Teeth)(5.230"OD)(3.287"ID) 2005-Up (Also Fits BJFA/MDKA/MDPA/MDRA/MJBA/MJFA 5th Clutch # 102 2005-Up)	5-10	22646-RJB-003
40102B	Friction, BYFA/B36A/P36A 5th Clutch (.076")(42 Teeth)(5.225"OD)	5	22645-RYF-003
40104A	Friction, BJFA/BVLA/BYFA/B36A/MDKA/MDPA/MDRA/MURA/P36A 2nd Clutch (.076") (28 Teeth)(4.700"OD)(Tortoise Shell Grooves) 2003-Up (Also Fits BWEA/BT3A/PN3A/PN4A)	7	22545-RDK-023
40104BB	Friction, B97A 2nd CLutch (.076"Thick)(28 Teeth)(4.700"OD)(With Straight Grooves) 2008-Up (Use 40104A)	7	
40106A	Friction, BDKA/BWEA/BT3A/MDKA/MDPA/MDRA/PN3A/PN4A 3rd Clutch (.076"Thick)(42 Teeth) (5.030"OD) 2003-Up	5	22644-RDK-003
40106B	Friction, BDGA/BJFA/BVLA/BYFA/B36A/B97A/MURA/P97A 3rd Clutch (.076"Thick)(42 Teeth) (5.030"OD) 2003-Up (Also Fits BWEA/BT3A/PN3A/PN4A)(BYFA 2007-09)(BDGA/B36A/P36A 2007-08)(B97A 2008-Up)	5	22644-R97-003
40106BA	Friction, B36A/P36A 3rd Clutch 2009-Up	5	
40106BB	Friction, B97A 3rd Clutch (.076")(32 Teeth)(5.030"OD) 2010-Up	5	
40106D	Friction, BYFA 3rd Clutch (.076")(42 Teeth)(5.030"OD)	6	22644-RYF-013
20108E	Friction, BDKA/BYFA/B36A/MDKA/MDPA/MDRA/P36A Low Clutch (.076")(49 Teeth)(Hi-Energy)	6	22544-P7W-003
20108V	Friction, BJFA/MJBA/MJFA/MURA Low Clutch 2005-08	6	
40112A	Friction, MDKA/MDRA Low Hold Clutch (.076")(44 Teeth)(4.727"OD)	3	22544-PX4-701
40112B	Friction, BYFA/B36A/MDPA/P36A Low Hold Clutch (.076")(44 Teeth)(4.727"OD)	3	22544-RYF-003
40119A	Friction Module, BDKA/MDKA/MDPA/MDRA 2003-08	1	
40119B	Friction Module, BDGA-1/BDGA-9/BDHA/B36A/P36A 2007-08 (Also Fits B97A 2008) (PN3A/PN4A 2009-10)(BWEA 2007-09)(With GPX Frictions)	1	
40119BA	Friction Module, B36A/P36A 2009-10 (With GPX Frictions)(Also Fits B97A 2010-11) (PN3A/PN4A 2011-Up)(PSFA 2009-10)(BT3A 2010-12)	1	
40119D	Friction Module, BYFA 2007-09 (With GPX Frictions)	1	
40119E	Friction Module, MJBA 2009-10 & BK3A/BK4A 2009-11 (With GPX Frictions)	1	
40119H	Friction Module, BVGA-8/BVLA/PVGA 2006-07 (With GPX Frictions)(Also Fits MJBA 2005-08) (BJFA/MJFA 2006-08)(P34A/P35A 2008)	1	

PART #	STEELS	QTY	REFERENCE #
40120B	Steel, BYFA/B36A/B97A/P36A 4th Clutch (.063")(24 Teeth)(3.740"ID)	5	22659-RFY-003
40120H	Steel, BVLA 4th Clutch (.071")(24 Teeth)(3.675"ID)	4	
40122A	Steel, MDKA/MDPA/MDRA 5th Clutch (.080")(24 Teeth)(3.675"ID)(Also Fits MDKA/MDPA/MDRA 4th Clutch # 120)	4	22656-RDK-003
40122B	Steel, BYFA/B36A/P36A 5th Clutch (.063")(24 Teeth)(3.675"ID)	5	22657-RYF-003
40124A	Steel, BYFA/B36A/MDKA/MDPA/MDRA/P36A 2nd Clutch (.071")(24 Teeth)(3.393"ID)	7	22643-RDK-013
40126A	Steel, MDKA/MDPA/MDRA 3rd Clutch (.071")(20 Teeth)(3.470"ID)	5	22653-RDK-003
40126B	Steel, B36A/P36A 3rd Clutch (.078")(20 Teeth)(3.570"ID)	5	22653-RJB-E01
40126D	Steel, BYFA 3rd Clutch (.071")(24 Teeth)(3.570"ID)	6	22653-RYF-003
40128A	Use 20128E	5	
20128E	Steel, BYFA/B36A/MDKA/MDPA/MDRA/P36A Low Clutch (.062")(24 Teeth)(4.070"ID)	5	22543-P7W-003
40132A	Use 20132E	1	
20132E	Steel, BYFA/B36A/MDKA/MDPA/MDRA/P36A Low Hold Clutch (.072")(6 Teeth)(3.675"ID)	3	22673-P7W-003
40139A	Steel Module, BDKA/MDKA/MDPA/MDRA 2003-08	1	
40139B	Steel Module, B36A/P36A 2007-Up	1	
40136BA	Steel Module, (B36A 2007-10)(B97A 2008-Up)(BDHA 2008-Up)(BWEA 2007-09)(P36A 2007-10) (PN3A 2009-10)(PN4A 2009-10)	1	
40139D	Steel Module, BYFA (2007-09) / MJBA (2009-10)	1	
40139E	Steel Module, BJFA 2006-Up	1	
40139H	Steel Module, BVGA/BVLA/P34A/P35A/PVLA 2007-08 (MJBA 2005-08)	1	

© Whatever It Takes Transmission Parts, Inc.

PART #	PRESSURE PLATES	QTY	REFERENCE #
40140BA	Pressure Plate, BYFA/B36A/P36A 4th Clutch (.082")(#1)(24 Teeth)(3.735"ID)(Stepped)	1	
40140BB	Pressure Plate, BYFA/B36A/P36A 4th Clutch (.086")(#2)(24 Teeth)(3.735"ID)(Stepped)	1	
40140BC	Pressure Plate, BYFA/B36A/P36A 4th Clutch (.090")(#3)(24 Teeth)(3.735"ID)(Stepped)	1	
40140BD	Pressure Plate, BYFA/B36A/P36A 4th Clutch (.094")(#4)(24 Teeth)(3.735"ID)(Stepped)	1	
40140BE	Pressure Plate, BYFA/B36A/P36A 4th Clutch (.098")(#5)(24 Teeth)(3.735"ID)(Stepped)	1	
40140BF	Pressure Plate, BYFA/B36A/P36A 4th Clutch (.102")(#6)(24 Teeth)(3.735"ID)(Stepped)	1	
40140BG	Pressure Plate, BYFA/B36A/P36A 4th Clutch (.106")(#7)(24 Teeth)(3.735"ID)(Stepped)	1	
40140BH	Pressure Plate, BYFA/B36A/P36A 4th Clutch (.110")(#8)(24 Teeth)(3.735"ID)(Stepped)	1	
40140BJ	Pressure Plate, BYFA/B36A/P36A 4th Clutch (.114")(#9)(24 Teeth)(3.735"ID)(Stepped)	1	
40142AA	Pressure Plate, BJFA/BVLA/BVGA-8/BYFA/B36A/B97A/MDKA/MDPA/MDRA /MURA/P36A 5th Clutch (.082")(#1)(24 Teeth)(5.317"OD)(3.675"ID)(Stepped) (Also Fits BJFA/BVLA/BVGA-8/ BYFA/B36A/B97A/MDKA/MDPA/MDRA/MURA/P36A 4th Clutch # 140)	1-2	22571-RYF-003
40142AB	Pressure Plate, BJFA/BVLA/BVGA-8/BYFA/B36A/B97A/MDKA/MDPA/MDRA /MURA/P36A 5th Clutch (.086")(#2)(24 Teeth)(5.317"OD)(3.675"ID)(Stepped) (Also Fits BJFA/BVLA/BVGA-8/ BYFA/B36A/B97A/MDKA/MDPA/MDRA/MURA/P36A 4th Clutch # 140)	1-2	22572-RYF-003
40142AC	Pressure Plate, BJFA/BVLA/BVGA-8/BYFA/B36A/B97A/MDKA/MDPA/MDRA /MURA/P36A 5th Clutch (.090")(#3)(24 Teeth)(5.317"OD)(3.675"ID)(Stepped) (Also Fits BJFA/BVLA/BVGA-8/ BYFA/B36A/B97A/MDKA/MDPA/MDRA/MURA/P36A 4th Clutch # 140)	1-2	22573-RYF-003
40142AD	Pressure Plate, BJFA/BVLA/BVGA-8/BYFA/B36A/B97A/MDKA/MDPA/MDRA /MURA/P36A 5th Clutch (.094")(#4)(24 Teeth)(5.317"OD)(3.675"ID)(Stepped) (Also Fits BJFA/BVLA/BVGA-8/ BYFA/B36A/B97A/MDKA/MDPA/MDRA/MURA/P36A 4th Clutch # 140)	1-2	22574-RYF-003
40142AE	Pressure Plate, BJFA/BVLA/BVGA-8/BYFA/B36A/B97A/MDKA/MDPA/MDRA /MURA/P36A 5th Clutch (.098")(#5)(24 Teeth)(5.317"OD)(3.675"ID)(Stepped) (Also Fits BJFA/BVLA/BVGA-8/ BYFA/B36A/B97A/MDKA/MDPA/MDRA/MURA/P36A 4th Clutch # 140)	1-2	22575-RYF-003
40142AF	Pressure Plate, BJFA/BVLA/BVGA-8/BYFA/B36A/B97A/MDKA/MDPA/MDRA /MURA/P36A 5th Clutch (.102")(#6)(24 Teeth)(5.317"OD)(3.675"ID)(Stepped) (Also Fits BJFA/BVLA/BVGA-8/ BYFA/B36A/B97A/MDKA/MDPA/MDRA/MURA/P36A 4th Clutch # 140)	1-2	22576-RYF-003
40142AG	Pressure Plate, BJFA/BVLA/BVGA-8/BYFA/B36A/B97A/MDKA/MDPA/MDRA /MURA/P36A 5th Clutch (.106")(#7)(24 Teeth)(5.317"OD)(3.675"ID)(Stepped) (Also Fits BJFA/BVLA/BVGA-8/ BYFA/B36A/B97A/MDKA/MDPA/MDRA/MURA/P36A 4th Clutch # 140)	1-2	22577-RYF-003
40142AH	Pressure Plate, BJFA/BVLA/BVGA-8/BYFA/B36A/B97A/MDKA/MDPA/MDRA /MURA/P36A 5th Clutch (.110")(#8)(24 Teeth)(5.317"OD)(3.675"ID)(Stepped) (Also Fits BJFA/BVLA/BVGA-8/ BYFA/B36A/B97A/MDKA/MDPA/MDRA/MURA/P36A 4th Clutch # 140)	1-2	22578-RYF-003
40142AJ	Pressure Plate, BJFA/BVLA/BVGA-8/BYFA/B36A/B97A/MDKA/MDPA/MDRA /MURA/P36A 5th Clutch (.114")(#9)(24 Teeth)(5.317"OD)(3.675"ID)(Stepped) (Also Fits BJFA/BVLA/BVGA-8/ BYFA/B36A/B97A/MDKA/MDPA/MDRA/MURA/P36A 4th Clutch # 140)	1-2	22579-RYF-003
40142BA	Pressure Plate, BYFA/B36A/P36A 5th Clutch (.082") (#1) (24 Teeth) (5.410"OD) (3.675"ID) (Stepped)	1	
40142BB	Pressure Plate, BYFA/B36A/P36A 5th Clutch (.086") (#2) (24 Teeth) (5.410"OD) (3.675"ID) (Stepped)	1	
40142BC	Pressure Plate, BYFA/B36A/P36A 5th Clutch (.090") (#3) (24 Teeth) (5.410"OD) (3.675"ID) (Stepped)	1	
40142BD	Pressure Plate, BYFA/B36A/P36A 5th Clutch (.094") (#4) (24 Teeth) (5.410"OD) (3.675"ID) (Stepped)	1	
40142BE	Pressure Plate, BYFA/B36A/P36A 5th Clutch (.098") (#5) (24 Teeth) (5.410"OD) (3.675"ID) (Stepped)	1	
40142BF	Pressure Plate, BYFA/B36A/P36A 5th Clutch (.102") (#6) (24 Teeth) (5.410"OD) (3.675"ID) (Stepped)	1	
40142BG	Pressure Plate, BYFA/B36A/P36A 5th Clutch (.107") (#7) (24 Teeth) (5.410"OD) (3.675"ID) (Stepped)	1	
40142BH	Pressure Plate, BYFA/B36A/P36A 5th Clutch (.110") (#8) (24 Teeth) (5.410"OD) (3.675"ID) (Stepped)	1	
40142BJ	Pressure Plate, BYFA/B36A/P36A 5th Clutch (.114") (#9) (24 Teeth) (5.410"OD) (3.675"ID) (Stepped)	1	
40144AA	Pressure Plate, BYFA/B36A/MDKA/MDPA/MDRA/P36A 2nd Clutch (.082")(#1)(24 Teeth) (3.395"ID)	1	22561-RDK-003
40144AB	Pressure Plate, BYFA/B36A/MDKA/MDPA/MDRA/P36A 2nd Clutch (.087")(#2)(24 Teeth) (3.395"ID)	1	22562-RDK-003
40144AC	Pressure Plate, BYFA/B36A/MDKA/MDPA/MDRA/P36A 2nd Clutch (.090")(#3)(24 Teeth) (3.395"ID)	1	22563-RDK-003
40144AD	Pressure Plate, BYFA/B36A/MDKA/MDPA/MDRA/P36A 2nd Clutch (.094")(#4)(24 Teeth) (3.395"ID)	1	22564-RDK-003
40144AE	Pressure Plate, BYFA/B36A/MDKA/MDPA/MDRA/P36A 2nd Clutch (.098")(#5)(24 Teeth) (3.395"ID)	1	22565-RDK-003
40144AF	Pressure Plate, BYFA/B36A/MDKA/MDPA/MDRA/P36A 2nd Clutch (.102")(#6)(24 Teeth) (3.395"ID)	1	22566-RDK-003
40144AG	Pressure Plate, BYFA/B36A/MDKA/MDPA/MDRA/P36A 2nd Clutch (.106")(#7)(24 Teeth) (3.395"ID)	1	22567-RDK-003

© Whatever It Takes Transmission Parts, Inc.

40144AH	Pressure Plate, BYFA/B36A/MDKA/MDPA/MDRA/P36A 2nd Clutch (.110")(#8)(24 Teeth)(3.395"ID)	1	22568-RDK-003
40144AJ	Pressure Plate, BYFA/B36A/MDKA/MDPA/MDRA/P36A 2nd Clutch (.114")(#9)(24 Teeth)(3.395"ID)	1	22569-RDK-003
40146AA	Pressure Plate, MDKA/MDPA/MDRA 3rd Clutch (.082")(#1)(20 Teeth)(3.465"ID)	1	22591-RDK-A01
40146AB	Pressure Plate, MDKA/MDPA/MDRA 3rd Clutch (.087")(#2)(20 Teeth)(3.465"ID)	1	22592-RDK-A01
40146AC	Pressure Plate, MDKA/MDPA/MDRA 3rd Clutch (.090")(#3)(20 Teeth)(3.465"ID)	1	22593-RDK-A01
40146AD	Pressure Plate, MDKA/MDPA/MDRA 3rd Clutch (.094")(#4)(20 Teeth)(3.465"ID)	1	22594-RDK-A01
40146AE	Pressure Plate, MDKA/MDPA/MDRA 3rd Clutch (.098")(#5)(20 Teeth)(3.465"ID)	1	22595-RDK-A01
40146AF	Pressure Plate, MDKA/MDPA/MDRA 3rd Clutch (.102")(#6)(20 Teeth)(3.465"ID)	1	22596-RDK-A01
40146AG	Pressure Plate, MDKA/MDPA/MDRA 3rd Clutch (.106")(#7)(20 Teeth)(3.465"ID)	1	22597-RDK-A01
40146AH	Pressure Plate, MDKA/MDPA/MDRA 3rd Clutch (.110")(#8)(20 Teeth)(3.465"ID)	1	22598-RDK-A01
40146AJ	Pressure Plate, MDKA/MDPA/MDRA 3rd Clutch (.114")(#9)(20 Teeth)(3.465"ID)	1	22599-RDK-A01
40146BA	Pressure Plate, B36A/P36A 3rd Clutch (.082")(#1)(20 Teeth)(3.565"ID)	1	22591-RJB-E01
40146BB	Pressure Plate, B36A/P36A 3rd Clutch (.087")(#2)(20 Teeth)(3.565"ID)	1	22592-RJB-E01
40146BC	Pressure Plate, B36A/P36A 3rd Clutch (.090")(#3)(20 Teeth)(3.565"ID)	1	22593-RJB-E01
40146BD	Pressure Plate, B36A/P36A 3rd Clutch (.094")(#4)(20 Teeth)(3.565"ID)	1	22594-RJB-E01
40146BE	Pressure Plate, B36A/P36A 3rd Clutch (.098")(#5)(20 Teeth)(3.565"ID)	1	22595-RJB-E01
40146BF	Pressure Plate, B36A/P36A 3rd Clutch (.102")(#6)(20 Teeth)(3.565"ID)	1	22596-RJB-E01
40146BG	Pressure Plate, B36A/P36A 3rd Clutch (.106")(#7)(20 Teeth)(3.565"ID)	1	22597-RJB-E01
40146BH	Pressure Plate, B36A/P36A 3rd Clutch (.110")(#8)(20 Teeth)(3.565"ID)	1	22598-RJB-E01
40146BJ	Pressure Plate, B36A/P36A 3rd Clutch (.114")(#9)(20 Teeth)(3.565"ID)	1	22599-RJB-E01
40146DA	Pressure Plate, BYFA 3rd Clutch (.082")(#1)(24 Teeth)(3.570"ID)	1	22591-RFY-003
40146DB	Pressure Plate, BYFA 3rd Clutch (.087")(#2)(24 Teeth)(3.570"ID)	1	22592-RFY-003
40146DC	Pressure Plate, BYFA 3rd Clutch (.090")(#3)(24 Teeth)(3.570"ID)	1	22593-RFY-003
40146DD	Pressure Plate, BYFA 3rd Clutch (.094")(#4)(24 Teeth)(3.570"ID)	1	22594-RFY-003
40146DE	Pressure Plate, BYFA 3rd Clutch (.098")(#5)(24 Teeth)(3.570"ID)	1	22595-RFY-003
40146DF	Pressure Plate, BYFA 3rd Clutch (.102")(#6)(24 Teeth)(3.570"ID)	1	22596-RFY-003
40146DG	Pressure Plate, BYFA 3rd Clutch (.106")(#7)(24 Teeth)(3.570"ID)	1	22597-RFY-003
40146DH	Pressure Plate, BYFA 3rd Clutch (.110")(#8)(24 Teeth)(3.570"ID)	1	22598-RFY-003
40146DJ	Pressure Plate, BYFA 3rd Clutch (.114")(#9)(24 Teeth)(3.570"ID)	1	22599-RFY-003
40148AA	Pressure Plate, BYFA/B36A/MDKA/MDPA/MDRA/P36A Low Clutch (.122")(#1)(24 Teeth)(4.065"ID)(Stepped)	1	22551-RDK-003
40148AB	Pressure Plate, BYFA/B36A/MDKA/MDPA/MDRA/P36A Low Clutch (.126")(#2)(24 Teeth)(4.065"ID)(Stepped)	1	22552-RDK-003
40148AC	Pressure Plate, BYFA/B36A/MDKA/MDPA/MDRA/P36A Low Clutch (.130")(#3)(24 Teeth)(4.065"ID)(Stepped)	1	22553-RDK-003
40148AD	Pressure Plate, BYFA/B36A/MDKA/MDPA/MDRA/P36A Low Clutch (.134")(#4)(24 Teeth)(4.065"ID)(Stepped)	1	22554-RDK-003
40148AE	Pressure Plate, BYFA/B36A/MDKA/MDPA/MDRA/P36A Low Clutch (.138")(#5)(24 Teeth)(4.065"ID)(Stepped)	1	22555-RDK-003
40148AF	Pressure Plate, BYFA/B36A/MDKA/MDPA/MDRA/P36A Low Clutch (.142")(#6)(24 Teeth)(4.065"ID)(Stepped)	1	22556-RDK-003
40148AG	Pressure Plate, BYFA/B36A/MDKA/MDPA/MDRA/P36A Low Clutch (.146")(#7)(24 Teeth)(4.065"ID)(Stepped)	1	22557-RDK-003
40148AH	Pressure Plate, BYFA/B36A/MDKA/MDPA/MDRA/P36A Low Clutch (.150")(#8)(24 Teeth)(4.065"ID)(Stepped)	1	22558-RDK-003
40148AJ	Pressure Plate, BYFA/B36A/MDKA/MDPA/MDRA/P36A Low Clutch (.154")(#9)(24 Teeth)(4.065"ID)(Stepped)	1	22559-RDK-003
40152A	Pressure Plate, BYFA/B36A/MDKA/MDPA/MDRA/P36A Low Hold Clutch (.197")(24 Teeth)(3.690"ID)	1	22675-RDK-003

PART #	VALVE BODY KITS	QTY	REFERENCE #
S20165B	Valve Body Kit, BVLA/PVLA (5 Speed, 6 Cylinder)(With .388"OD CPC Valves)(Contains: Pressure Regulator Valve, 2 CPC Valves, Springs & End Plugs)(Superior)	2	22816-P6H-003
S50165A	Valve Body Kit, BCLA/BZHA/BZJA/BZKA-1/BZNA/B90A/GPLA/GPPA-3/GPPA-4/MCLA/MCTA/MKYA/MKZA/MM7A/MNZA/MRMA/MZHA/MZJA/MZKA-5/M91A (Superior)	1	

PART #	SEALING RINGS	QTY	REFERENCE #
40175A	Ring Kit, BBSA/BKDA/BJFA/BVGA/BVLA/BWEA/MDKA/MDPA/MJBA/MJFA/P34A/P35A/PVGA/PVLA 2003-Up	1	
40184AT	Ring, BYFA/B36A/MDKA/MDPA/MDRA P36A 3rd Shaft (.076"Thick)(1.365"OD)(Teflon)	2	22816-P6H-003

PART #	WASHERS & BEARINGS	QTY	REFERENCE #
40204A	Use U30284A	1	
30206A	Washer, BYFA/B36A/MDKA/MDPA/MDRA/P36A Under Countershaft Nut	1	90402-POZ-000

© Whatever It Takes Transmission Parts, Inc.

PART #	WASHERS & BEARINGS (Continued)	QTY	REFERENCE #
40207A	Washer, BFYA/B36A/MDKA/MDPA/MDRA/P36A (Mainshaft)(.155"Thick)(1.572"OD)(1.152"ID) (8 Inner Splines)(Also Fits BYFA/B36A/MDKA/MDPA/MDRA/P36A (Secondary Shaft) # 206)	1-2	90402-RDK-000
80209	Caged Bearing, BYFA/B36A/MDKA/MDPA/MDRA/P36A Stator (Front)(1.040"OD)	1	
40211A	Ball Bearing, MDKA/MDPA/MDRA Bell Housing To Converter Hub (.295"Thick)(2.675"OD) (1.655"ID)(16 Balls)(Cast # DG426808)	1	91001-RDK-004
40211B	Ball Bearing, BYFA/B36A/P36A Bell Housing To Converter Hub (.380"Thick)(2.755"OD) (1.655"ID)(14 Balls)(Cast # TM-SX08C53)	1	91001-R97-003
40214A	Caged Needle Bearing, MDKA/MDPA/MDRA Mainshaft To Converter Reactor (Rear) (.850"Long)	1	91017-RDK-003
40214B	Caged Needle Bearing, BYFA/B36A/P36A Mainshaft To Converter Reactor (Rear)(.992"Long)	1	91017-RJF-T01
40220A	Ball Bearing, BYFA/B36A/MDKA/MDPA/MDRA/P36A 4th Gear To Mainshaft (1.220"Thick) (3.075"OD)(1.495"ID)(14 Balls)(Cast #08B11 Or 08A96)	1	91007-RDK-003
40225A	Collar, BYFA/B36A/MDKA/MDPA/MDRA/P36A 5th Gear To Mainshaft (1.920"Long)(1.300"ID) (W/Shoulder)	1	90501-RDK-000
40226A	Bearing, BYFA/B36A/MDKA/MDPA/MDRA/P36A 5th Gear To Collar # 225 (.118"Thick) (2.315"OD)(1.580"ID)	1	91031-RDK-003
40229A	Caged Needle Bearing, BYFA/B36A/MDKA/MDPA/MDRA/P36A 5th Gear To Mainshaft (1.325"Thick)(1.785"OD)	1	91016-RDK-003
40232A	Bearing, BYFA/MDKA/MDRA 5th Gear To Ball Bearing # 235 (.099"Thick)(2.065"OD)(1.580"ID)	1	91021-PRP-013
40232B	Bearing, B36A/MDPA/P36A 5th Gear To Ball Bearing # 235 (.099"Thick)(2.020"OD)(1.580"ID)	1	91022-RJF-T01
40235A	Ball Bearing, BYFA/MDKA/MDPA/MDRA Mainshaft To Case (.668"Thick)(3.230"OD)(1.142"ID) (9 Balls)(Cast # 29BC08S4N)	1	91002-PVG-A00
40235B	Ball Bearing, B36A/P36A Mainshaft To Case (.765"Thick)(3.230"OD)(1.142"ID)(8 Balls) (Cast # 29BC08S7N)	1	91002-RJF-T01
40238-1A	Needle Bearing, BYFA/B36A/MDKA/MDPA/MDRA/P36A Secondary Shaft To Bell Housing (Small Inner)(.372"Thick)(1.528"OD)(Cast # BE-NK28.8X38)	1	
40238A	Roller Bearing, BYFA/B36A/MDKA/MDPA/MDRA/P36A Secondary Shaft To Bell Housing (.747"Thick)(2.480"OD)(12 Rollers)(Cast # 8E-NK 32X63X19-2)	1	91101-RDK-003
40239A	Bearing W/Races, BYFA/B36A/MDKA/MDPA/MDRA/P36A Secondary Shaft Clutch Drum To Front Roller Bearing (.180"Thick)(2.475"OD)(1.820"ID)	1	91039-RDK-005
40240A	Bearing, MDKA/MDPA/MDRA 1st Gear To Idler Gear (.099"Thick)(2.409"OD)(1.720"ID)	1	91018-RDK-003
40240B	Bearing, BYFA/B36A/P36A 1st Gear To Idler Gear (.099"Thick)(2.312"OD)(1.720"ID)	1	91018-RDP-003
40241A	Caged Needle Bearing, BYFA/B36A/MDKA/MDPA/MDRA/P36A 1st Gear (Secondary Shaft) (Inner)(1.842"Long)(1.710"OD)	1	91022-RDK-013
40242A	Collar, BYFA/B36A/MDKA/MDPA/MDRA/P36A 1st Gear (Secondary Shaft)(Inner)(2.495"Long) (1.537"OD)(1.260"ID)	1	90443-RDK-000
40243A	Bearing, BYFA/B36A/MDKA/MDPA/MDRA/P36A 2nd Clutch Hub To Idler Gear (.138"Thick) (2.585"OD)(1.736"ID)(Also Fits BYFA/B36A/MDKA/MDPA/MDRA/P36A 2nd Clutch Hub To Secondary Shaft # 253)	1-2	91032-RJB-013
40244B	Ball Bearing, BYFA/B36A/P36A Low Clutch Hub To 1st Gear (.393"Thick)(3.150"OD)(2.275"ID) (21 Balls)(Cast # B572-8)	1	
40245AA	Washer, MDKA/MDPA/MDRA Low Clutch Drum To Low Hold Clutch Hub (.240"Thick)(2.040"OD) (1.262"ID)(W/3 Notches)	1	90502-RDK-010
40245AB	Washer, MDKA/MDPA/MDRA Low Clutch Drum To Low Hold Clutch Hub (.243"Thick)(2.040"OD) (1.262"ID)(W/3 Notches)	1	90503-RDK-010
40245AC	Washer, MDKA/MDPA/MDRA Low Clutch Drum To Low Hold Clutch Hub (.245"Thick)(2.040"OD) (1.262"ID)(W/3 Notches)	1	90504-RDK-010
40245AD	Washer, MDKA/MDPA/MDRA Low Clutch Drum To Low Hold Clutch Hub (.248"Thick)(2.040"OD) (1.262"ID)(W/3 Notches)	1	90505-RDK-010
40245AE	Washer, MDKA/MDPA/MDRA Low Clutch Drum To Low Hold Clutch Hub (.250"Thick)(2.040"OD) (1.262"ID)(W/3 Notches)	1	90506-RDK-010
40245AF	Washer, MDKAMDPA/MDRA Low Clutch Drum To Low Hold Clutch Hub (.253"Thick)(2.040"OD) (1.262"ID)(W/3 Notches)	1	90507-RDK-010
40245AG	Washer, MDKA/MDPA/MDRA Low Clutch Drum To Low Hold Clutch Hub (.255"Thick)(2.040"OD) (1.262"ID)(W/3 Notches)	1	90508-RDK-010
40245AH	Washer, MDKA/MDPA/MDRA Low Clutch Drum To Low Hold Clutch Hub (.258"Thick)(2.040"OD) (1.262"ID)(W/3 Notches)	1	90509-RDK-010
40245AJ	Washer, MDKA/MDPA/MDRA Low Clutch Drum To Low Hold Clutch Hub (.260"Thick)(2.040"OD) (1.262"ID)(W/3 Notches)	1	90510-RDK-010
40245AK	Washer, MDKA/MDPA/MDRA Low Clutch Drum To Low Hold Clutch Hub (.263"Thick)(2.040"OD) (1.262"ID)(W/3 Notches)	1	90511-RDK-010
40245AL	Washer, MDKA/MDPA/MDRA Low Clutch Drum To Low Hold Clutch Hub (.265"Thick)(2.040"OD) (1.262"ID)(W/3 Notches)	1	90512-RDK-010
40245AM	Washer, MDKA/MDPA/MDRA Low Clutch Drum To Low Hold Clutch Hub (.268"Thick)(2.040"OD) (1.262"ID)(W/3 Notches)	1	90513-RDK-010
40245AN	Washer, MDKA/MDPA/MDRA Low Clutch Drum To Low Hold Clutch Hub (.270"Thick)(2.040"OD) (1.262"ID)(W/3 Notches)	1	90514-RDK-010

© Whatever It Takes Transmission Parts, Inc.

40245BA	Washer, BYFA/B36A/P36A Low Clutch Drum To Low Hold Clutch Hub (.240”Thick)(2.040”OD)(1.262”ID)(W/4 Notches)	1	90202-RJF-T00
40245BB	Washer, BYFA/B36A/P36A Low Clutch Drum To Low Hold Clutch Hub (.243”Thick)(2.040”OD)(1.262”ID)(W/4 Notches)	1	90203-RJF-T00
40245BC	Washer, BYFA/B36A/P36A Low Clutch Drum To Low Hold Clutch Hub (.245”Thick)(2.040”OD)(1.262”ID)(W/4 Notches)	1	90204-RJF-T00
40245BD	Washer, BYFA/B36A/P36A Low Clutch Drum To Low Hold Clutch Hub (.248”Thick)(2.040”OD)(1.262”ID)(W/4 Notches)	1	90205-RJF-T00
40245BE	Washer, BYFA/B36A/P36A Low Clutch Drum To Low Hold Clutch Hub (.250”Thick)(2.040”OD)(1.262”ID)(W/4 Notches)	1	90206-RJF-T00
40245BF	Washer, BYFA/B36A/P36A Low Clutch Drum To Low Hold Clutch Hub (.253”Thick)(2.040”OD)(1.262”ID)(W/4 Notches)	1	90207-RJF-T00
40245BG	Washer, BYFA/B36A/P36A Low Clutch Drum To Low Hold Clutch Hub (.255”Thick)(2.040”OD)(1.262”ID)(W/4 Notches)	1	90208-RJF-T00
40245BH	Washer, BYFA/B36A/P36A Low Clutch Drum To Low Hold Clutch Hub (.258”Thick)(2.040”OD)(1.262”ID)(W/4 Notches)	1	90209-RJF-T00
40245BJ	Washer, BYFA/B36A/P36A Low Clutch Drum To Low Hold Clutch Hub (.260”Thick)(2.040”OD)(1.262”ID)(W/4 Notches)	1	90210-RJF-T00
40245BK	Washer, BYFA/B36A/P36A Low Clutch Drum To Low Hold Clutch Hub (.263”Thick)(2.040”OD)(1.262”ID)(W/4 Notches)	1	90211-RJF-T00
40245BL	Washer, BYFA/B36A/P36A Low Clutch Drum To Low Hold Clutch Hub (.265”Thick)(2.040”OD)(1.262”ID)(W/4 Notches)	1	90212-RJF-T00
40245BM	Washer, BYFA/B36A/P36A Low Clutch Drum To Low Hold Clutch Hub (.268”Thick)(2.040”OD)(1.262”ID)(W/4 Notches)	1	90213-RJF-T00
40245BN	Washer, BYFA/B36A/P36A Low Clutch Drum To Low Hold Clutch Hub (.270”Thick)(2.040”OD)(1.262”ID)(W/4 Notches)	1	90214-RJF-T00
40246A	Bearing, BYFA/B36A/MDKA/MDPA/MDRA/P36A Low Clutch Drum To Low Hold Clutch Hub (.098”Thick)(2.235”OD)(1.580”ID)	1	91040-RDK-003
40251A	Caged Needle Bearing, MDKA/MDPA/MDRA 2nd Clutch Hub (Inner)(1.645”Long)(1.950”OD)	1	91021-RDK-013
40251B	Caged Needle Bearing, BYFA/B36A/P36A 2nd Clutch Hub (Inner)(.885”Long)(1.940”OD)	2	91021-RJF-T01
40252B	Washer, BYFA/B36A/P36A 2nd Clutch Hub To Secondary Shaft (.377”Thick)(2.595”OD)(W/Splined ID)	1	90405-RJB-000
40253A	Use U40243A	1	
40254A	Roller Bearing, BYFA/B36A/MDKA/MDPA/MDRA/P36A Countershaft To Bell Housing (.942”Thick)(2.915”OD)(13 Rollers)(Cast # 2U07042627 Or Cast # HL-8E-NK40.5X75X24-2PX1)	1	91102-RJF-T01
40256A	Ball Bearing, BYFA/B36A/MDKA/MDPA/MDRA/P36A 3rd Shaft To Bell Housing (.471”Thick)(2.047”OD)(1.102”ID)(Cast # KOYO 60/28YR3)	1	91006-RDK-004
40260A	Bearing, MDKA/MDPA/MDRA Idler Gear To 2nd Gear (Countershaft)(.117”Thick)(3.255”OD)(2.565”ID)	1	91035-RDK-003
40260B	Bearing, BYFA/B36A/P36A Idler Gear To 2nd Gear (Countershaft)(.177”Thick)(3.455”OD)(2.760”ID)	1	91035-RJF-T01
40261A	Caged Needle Bearing, MDKA/MDPA/MDRA Idler To Countershaft (Inner)(1.117”Thick)(2.510”OD)	1	91024-PAX-006
40261B	Caged Needle Bearing, BYFA/B36A/P36A Idler To Countershaft (Inner)(1.117”Thick)(2.675”OD)	1	91020-RJF-T01
40262A	Bearing, MDKA/MDPA/MDRA 1st Gear To Idler (Countershaft)(.215”Thick)(3.425”OD)(2.210”ID)	1	91036-RDK-003
40262B	Bearing, BYFA/B36A/P36A 1st Gear To Idler (Countershaft)(.215”Thick)(3.525”OD)(2.405”ID)	1	91036-RJF-T01
40263AA	Washer, MDKA/MDPA/MDRA 1st Gear To 2nd Gear (Countershaft)(Selective)(2.400”OD)(2.013”ID)	1	
40263BA	Washer, BYFA/B36A/P36A 1st Gear To 2nd Gear (Countershaft)(Selective)(2.205”OD)(1.819”ID)	1	
40267B	Collar, BYFA/B36A/P36A 4th Gear (Countershaft) To Washer # 268 (1.300”Thick)(1.995”OD)(1.817”ID)(W/Shoulder)	1	
40268AA	Washer, MDKA/MDPA/MDRA 4th Gear (Countershaft) To Horse Shoe Clips (Selective)(1.960”OD)(1.685”ID)	1	
40268BA	Washer, BYFA/B36A/P36A 4th Gear (Countershaft) To Horse Shoe Clips (Selective)(1.993”OD)(1.818”ID)	1	
40269A	Washer, MDKA/MDPA/MDRA 5th Gear (Countershaft) To Snap Ring # 886 (.235”Thick)(1.858”OD)(1.378”ID)	1	90404-RDK-000
40269B	Washer, BYFA/B36A/P36A 5th Gear (Countershaft) To Snap Ring # 886 (.118”Thick)(1.858”OD)(1.378”ID)	1	90404-RJB-E00
40271A	Caged Needle Bearing, MDKA/MDPA/MDRA 5th Gear To Countershaft (Inner)(1.005”Thick)(1.585”OD)	1	91028-POZ-013
40271B	Caged Needle Bearing, BYFA/B36A/P36A 5th Gear To Countershaft (Inner)(1.125”Thick)(1.570”OD)	1	91028-RJB-003
40272A	Collar, BYFA/B36A/MDKA/MDPA/MDRA/P36A Reverse Gear (Inner) To Countershaft (.572”Thick)(1.575”OD)(1.222”ID)(W/4 Notches)	1	90442-RDK-000
40273A	Gaged Needle Bearing, BYFA/B36A/MDKA/MDPA/MDRA/P36A Reverse Gear (Inner) To Countershaft (.560”Thick)(1.780”OD)	1	91024-PAX-006
40274A	Ball Bearing, MDKA/MDPA/MDRA Countershaft To Case (.745”Thick)(3.660”OD)(Cast # NSK B31-13NX Or HTF B31-13E)	1	91003-PVG-005

© Whatever It Takes Transmission Parts, Inc.

PART #	WASHERS & BEARINGS (Continued)	QTY	REFERENCE #
40274B	Ball Bearing, BYFA/B36A/P36A Countershaft To Case (.825"Thick)(3.700"OD) (Cast # NSK 31-23AE)	1	91003-RWE-005
40275A	Ball Bearing, BYFA/MDKA/MDPA Transfer Driven Gear To Case (.750"Thick)(2.992"OD) (.866"ID)(12 Balls)(Cast # NTN SF04A48)	1	91008-RDK-003
40276A	Ball Bearing, BYFA/MDKA/MDPA Transfer Driven Gear To Bell Housing (.650"Thick)(3.150"OD) (1.575"ID)(9 Balls)(Cast # SC08A70C3)	1	91009-RDK-003
40277AA	Shim, BYFA/MDKA/MDPA Transfer Driven Gear To Ball Brg (Rear)(Selective)(1.122"OD) (.875"ID)	1	
40278AA	Washer, BYFA/B36A/MDKA/MDPA/MDRA/P36A 3rd Shaft Snap Ring # 895 To Roller Bearing # 279 (Selective)(1.052"OD)(.800"ID)	1	
40279A	Roller Brearing, BYFA/B36A/MDKA/MDPA/MDRA/P36A 3rd Shaft (Rear) To Case (.670"Thick) (1.615"OD)(.785"ID)(Cast # NSK 2820-10)	1	
40280A	Bearing, BYFA/B36A/MDKA/MDPA/MDRA/P36A 3rd Gear To 4th/Idler (.118"Thick)(2.115"OD) (1.185"ID)(Also Fits BYFA/B36A/MDKA/MDPA/MDRA/P36A 3rd Gear To 3rd Clutch Drum # 281)	1-2	91034-RDK-003
40281A	Use U40280A	1	
40282AA	Washer, BYFA/B36A/MDKA/MDPA/MDRA/P36A 3rd Gear To 3rd Clutch Drum (Selective) (2.090"OD)(W/Splined ID)	1	
40283A	Caged Needle Bearing, BYFA/B36A/MDKA/MDPA/MDRA/P36A Reverse Idler Gear (Inner) (.575"Thick)(.690"OD)(Takes 2)	2	91025-P24-006
30284A	Washer, BYFA/B36A/MDKA/MDPA/MDRA/P36A # 284 & # 204 (.040"Thick)(1.175"OD)(Flat)	1	90408-P7X-006
40285A	Caged Needle Bearing, BYFA/B36A/MDKA/MDPA/MDRA/P36A 3rd Gear (Inner)(3rd Shaft) (1.245"Long)(1.385"OD)	1	91019-RDK-013
40286A	Ball Bearing, MDKA/MDPA/MDRA Secondary Shaft To Case (.353"Thick)(2.560"OD)(1.140"ID) (13 Balls)(Cast # SC06CS2C3)	1	91005-RDK-003
40286B	Ball Bearing, BYFA/B36A/P36A Secondary Shaft To Case (.432"Thick)(2.560"OD)(1.140"ID) (13 Balls)(Cast # SX06C89C3V2)	1	91005-RWE-003
40289AK	Cone Bearing W/Cup Race, BVLA/MDKA/MDPA/MDRA/MURA Differential To Case (24 Roller Bearing)(1.770"ID)(3.350"OD Cup Race)	1	91122-RDK-003
40289BK	Cone Bearing W/Cup Race, B36A/P36A Differential To Case (21 Roller Bearing)(1.770"ID) (3.350"OD Cup Race)	1	91122-R36-005
40290AA	Shim, MDKA/MDPA/MDRA Differential To Case (Selective)(3.333"OD)(2.790"ID)(Split)	1	
40290BA	Shim, BYFA/B36A/P36A Differential To Case (Selective)(3.333"OD)(2.790"ID)(Solid)	1	
20291D	Cup Race, MDKA/MDPA/MDRA Differential To Bell Housing (.610" Thick)(3.150"OD) (Cast # ETA-CR-09A44ST)	1	
40292AK	Cone Bearing W/Cup Race, BJFA Differential To Bell Housing (20 Roller Bearing 1.772"ID) (3.425"OD Cup Race)(Wit Retro Fit D40292BK)(Cast # 91120-RJF-TO1)	1	
40292BK	Cone Bearing W/Cup Race, BYFA/B36A/P36A Differential To Bell Housing (20 Roller Bearing) (1.772"ID)(3.425"OD Cup Race)	1	91120-R36-005
20292D	Cone Bearing, BVLA/MDKA/MDPA/MDRA/MURA Differential To Bell Housing (20 Rollers) (1.773"ID)(Cast # ETA-CR-09A44ST)	1	
20292DK	Cone Bearing W/Cup Race, MDKA/MDPA/MDRA Differential To Bell Housing (20 Roller Bearing) (3.150"OD Cup Race)(Bearing Cast # ETA-CR-09A44ST)(Cup Race Cast # ETA-CR-09A44ST).	1	
40294A	End Cap Washer, MDKA/MDPA/MDRA Low Sprag To Ball Bearing # 297 (.032"Thick) (3.145"OD)(2.290"ID)	1	
40294B	End Cap Washer, BYFA/B36A/P36A Low Sprag To Ball Bearing # 297 (.032"Thick)(3.145"OD) (2.535"ID)	1	
40295A	End Cap Washer, MDKA/MDPA/MDRA Low Sprag To Low Clutch Hub # 574 (.043"Thick) (2.930"OD)(2.292"ID)	1	
40295B	End Cap Washer, BYFA/B36A/P36A Low Sprag To Low Clutch Hub # 574 (.036"Thick) (3.150"OD)(2.285"ID)	1	
40296A	Washer, MDKA/MDPA/MDRA Low Clutch Hub To 1st Gear (.023"Thick)(3.330"OD)(2.315"ID) (4 Tabs)	1	
40297A	Ball Bearing, MDKA/MDPA/MDRA Low Hold Clutch Hub To Secondary Shaft (.510"Thick) (3.150"OD)(2.130"ID)(16 Balls)(Cast # NSK 6911)	1	
40297B	Ball Bearing, BYFA/B36A/P36A Low Hold Clutch Hub To Secondary Shaft (.510"Thick) (3.150"OD)(2.275"ID)(21 Balls)(Cast # B57Z-7)	1	
40298-1A	Ball Bearing, BYFA/B36A/MDKA/MDPA/MDRA/P36A Park Actuator Rod To Case (.235"Thick) (.787"OD)(.355"ID)(Cast # NSK 699A1)	1	91006-P1B-003
40298A	Ball Bearing, BYFA/B36A/MDKA/MDPA/MDRA/P36A Shift Rod To Case (.235"Thick)(.945"OD) (.472"ID)(Cast # NSK 6901)(Also Fits BYFA/B36A/MDKA/MDPA/MDRA/P36A Park Actuator Rod To Bell Housing # 298-2)	1-2	91209-612-003

PART #	GASKETS & RUBBER COMPONENTS	QTY	REFERENCE #
40318A	Gasket, BDKA/BYFA/MDKA/MDPA/MDRA Bell Housing To Case (24 Bolt) 2003-Up	1	21811-RDK-000
40318B	Gasket, B36A/B97A/MURA/P36A Bell Housing To Case (23 Bolt)	1	21811-R36-000

© Whatever It Takes Transmission Parts, Inc.

40391A ..... O-Ring, BDKA/BYFA/B36A/MDKA/MDPA/MDRA/P36A Secondary Shaft Sleeve #697 To
..... Bell Housing 2003-Up ..... 2 .....

PART #	ELECTRICAL COMPONENTS	QTY	REFERENCE #
40410A	Neutral Safety Switch, MDKA MDPA/MDRA (10 Blade Connector)(Cast # RDP)	1	28900-RDK-003
40410B	Neutral Safety Switch, BYFA B36A/P36A (10 Pin Connector)(Cast # RYF)	1	28900-RYF-023
40411B	Switch, B36A/P36A Pressure (3rd Clutch)(Tan, Black or White Connector, 1 Prong)(Screws Into ..... Case At Bottom)	1	28610-R36-004
40411BB	Switch, B97A Pressure (Grey Oval 1 Blade Connector)(Screws Into Case At Bottom)	1	
20411D	Switch, BDKA/BJFA/BYFA/BVLA/MDKA/MDPA/MDRA/MURA/MYFA 2nd & 3rd Clutch Pressure ..... (Screws In The Bottom of Case)(Grey, Black Or Beige Connector).....	1	28610-RAY-003
40421A	Solenoid, BYFA/B36A/MDKA/MDPA/MDRA/P36A Shift A (BrownConnector)(Internal) 2003-Up ..... (Also Fits BYFA/B36A/MDKA/MDPA/MDRA/P36A # 423 (Shift C) 2003-Up)	1-2	28400-RDK-003
40422A	Solenoid, BYFA/B36A/MDKA/MDPA/MDRA/P36A Shift B (Black Connector)(Internal) 2003-Up ..... (Also Fits BYFA/B36A/MDKA/MDPA/MDRA/P36A # 427 (L/Up Control D) 2003-Up)	1-2	28500-RJB-004
40423A	Use 40421A.....	1	
40425A	Solenoid W/Housing, BJFA(06-08)/BVLA/BYFA/B36A/MDKA/MDPA/MDRA/MURA/P34A/P35A ..... Linear (Lock-Up Clutch Pressure Control C)(1 Solenoid W/Aluminum Housing) 2003-Up ..... (External).....	1	28260-RDK-023
40425B	Solenoid W/Housing, BBTA/BJFA(2009)/BK3A/BK4A/BWEA/B97A/MJBA/MM2A/PN3A/PN4A/ ..... PSFA/PV1A/P36A Linear (Lock-Up Clutch Pressure Control C)(1 Solenoid With Aluminum ..... Housing) 2008-Up	1	
40427A	Use 40422A.....	1	
40431A	Solenoids W/Housing, BJFA/BLFA/BVLA/BYFA/MDKA/MDPA/MDRA/MJFA/MURA/P34A/P35A ..... Line A (Pressure Control A & B)(2 Solenoids W/Aluminum Housing) 2003-Up (External)	1	28250-RDK-014
40431B	Solenoids With Housing, B36A/B97A/P36A (Line A) (Pressure Control A & B)(2 Solenoids ..... With Aluminum Housing)(External) 2007-Up	1	
40436A	Sensor, BYFA/B36A/MDKA/MDPA/MDRA/P36A OSS (On The Side Of The Case, The Rear ..... Sensor)(Cast # 7509A)(The 3 Prong Connectors 90 Degree Turn From Bolt Hole) 2007-11	1	28810-RWE-003
40437A	Sensor, BYFA/MDKA/MDPA Temperature (2 Blade, Large Connector)(8 3/4"Long Harness)	1	28650-RDK-004
40437B	Sensor, B36A/MDRA/P36A Temperature (2 Pin, Small Connector)(5 1/4"Long Harness).....	1	28650-R36-003
40438A	Sensor, BYFA/B36A/MDKA/MDPA/MDRA/P36A ISS (On The Side Of The Case, The Front ..... Sensor)(Cast # 7511F)(The 3 Prong Connector 180 Degree Turn From Bolt Hole)	1	28820-RWE-003
40439B	Switch, B36A/P36A Pressure (2nd & 4th Clutch)(White Oval Connector, 1 Blade)(Top (Front) ..... Of Case)	1	28600-R36-004
20439B	Switch, BDKA/BYFA/MDKA/MDPA/MDRA (Beige Conn)(1 Prong) Top (Front) Of Case.....	1	28600-RAY-003
40439BB	Switch, BC5A/BK3A/BK4A/BT3A/B8SA/B8TA/B97A/MM2A/PN3A/PN4A/PSFA/PV1A/P36A/ ..... P9YA/P9ZA Pressure (White Or Brown Oval 1 Blade Connector)(Uses 2 Per Transmission).....	2	

PART #	CASE COMPONENTS	QTY	REFERENCE #
40444A	Case Connector, BYFA/B36A/MDKA/MDPA/MDRA/P36A (4 Pin Grey External Connector, ... W/2 Black & W/2 Brown Internal Connectors)	1	28360-RDK-003

PART #	HARDPARTS	QTY	REFERENCE #
40529-1A	Dowel Pin, BYFA/B36A/MDKA/MDPA/MDRA/P36A Stator Shaft Stop (2.790"OD)(.275"OD)	1	90702-RDK-000
40529A	Tube, BYFA/B36A/MDKA/MDPA/MDRA/P36A Stator (PWE Casting)(4.290"Long Shaft)	1	25155-RWE-000
70530B	Pump Gears, BYFA/B36A/MDKA/MDPA/MDRA/P36A (.510"Thick)(19 Teeth & 29 Teeth) ..... (W/39 Splines).....	1	
40550A	Drum, MDKA/MDPA/MDRA 4th/5th Clutch (24 Teeth Steels)(2.760"Wide)(5.470"OD)	1	22661-RDK-013
40550B	Drum, BYFA/B36A/P36A 4th/5th Clutch (24 Teeth Steels)(2.905"Wide)(5.550"OD).....	1	22661-RYF-003
40552A	Drum, BYFA/B36A/MDKA/MDPA/MDRA/P36A 2nd Clutch (24 Teeth Steels)(1.950"Thick At ..... The Outer Edge)(5.150"OD)(36 Oval Holes On The Outside).....	1	22610-RDK-033
40554A	Drum, MDKA/MDRA Low/Low Hold Clutch (3.090"Thick)(5.775"OD)(W/24 Oval Holes On ..... The Outside)	1	22510-RDK-003
40554B	Drum, BYFA/B36A/MDPA/P36A Low/Low Hold Clutch (3.090"Thick)(5.670"OD)(W/36 Oval ..... Holes On The Outside).....	1	22510-RYF-003
40555A	Drum, MDKA/MDPA/MDRA 3rd Clutch (1.690"Thick)(5.395"OD)(20 Teeth Steels).....	1	22651-RDK-003
40555B	Drum B36A/P36A 3rd Clutch (1.715"Thick)(5.475"OD)(20 Teeth Steels)	1	22651-RYF-003
40555D	Drum, BYFA 3rd Clutch (1.805"Thick)(5.470"OD)(24 Teeth Steels).....	1	22651-PVL-003
40561A	Piston Kit, MDKA/MDPA/MDRA 5th Clutch (Piston Is .345"Thick At TheEdge) (Also Fits ..... MDKA/MDPA/MDRA 4th Clutch # 560).....	1	
40561B	Piston Kit, BYFA/B36A/P36A 5th Clutch (Piston Is .320"Thick At The Edge) (Also Fits .... BYFA/B36A/P36A 4th Clutch # 560)	1	
40562A	Piston Kit, BYFA/B36A/MDKA/MDPA/MDRA/P36A 2nd Clutch	1	
40565A	Piston Kit, MDKA/MDPA/MDRA 3rd Clutch.....	1	
40565B	Piston Kit, B36A/P36A 3rd Clutch	1	
40565D	Piston Kit, BYFA 3rd Clutch.....	1	

© Whatever It Takes Transmission Parts, Inc.

PART #	HARDPARTS	QTY	REFERENCE #
40567A	Piston Kit, MDKA/MDPA/MDRA Low Hold Clutch	1	
40567B	Piston Kit, BYFA/B36A/P36A Low Hold Clutch	1	
40572A	Hub, MDKA/MDPA/MDRA 2nd Clutch (.490"Thick)(2.980"OD)	1	
40572B	Hub, BYFA/B36A/P36A 2nd Clutch (.635"Thick)(3.122"OD)	1	
40574A	Hub, MDKA/MDPA/MDRA Low Clutch (49 Clutch Splines)(1.625"Thick)	1	
40574B	Hub, BYFA/B36A/P36A Low Clutch (49 Clutch Splines)(2.015"Thick)	1	
40577A	Hub, MDKA/MDPA/MDRA Low Hold Clutch (1.655"Thick)(1.515"ID)(W/44 Clutch Splines)	1	23418-RDK-000
40577B	Hub, BYFA/B36A/P36A Low Hold Clutch (1.683"Thick)(1.515"ID)(W/44 Clutch Splines)	1	23418-RJB-E00
40654A	Sprag, BYFA/B36A/MDKA/MDPA/MDRA/P36A Low (26 Elements)(.595"Thick)(2.972"OD At The Lip)	1	
40672A	Mainshaft, MDKA/MDPA/MDRA (15 1/4" Long)(43 Teeth, No Groove)	1	23210-RDK-305
40672B	Mainshaft, B36A/P36A (15 3/4" Long)(42 Teeth, 1 Wide & 1 Narrow Groove)	1	23210-RWE-305
40672D	Mainshaft, BYFA (15 3/4" Long)(42 Teeth, 3 Groove)	1	23210-RYF-305
40673A	3rd Shaft, MDKA/MDPA/MDRA (6 5/16"Long)(1.130" From Front Of Shaft To Flange)	1	23240-RDK-000
40673B	3rd Shaft, B36A/P36A (6 1/2" Long)(1.250" From Front Of Shaft To Flange)	1	23240-RWE-A00
40673D	3rd Shaft, BYFA (6 1/2"Long)(1.130" From Front Of Shaft To Flange)	1	23240-RWE-000
40675A	Secondary Shaft, MDKA/MDPA/MDRA (12 1/2"Long)(.253"Thick Flange)(W/3 Sets Of Splines)	1	23231-RDK-030
40675B	Secondary Shaft, BYFA/B36A/P36A (12 5/8"Long)(.178"Thick Flange)(W/4 Sets Of Splines)	1	23230-RWE-010
40676A	Countershaft, MDKA (11 13/16" Long)(16 Teeth, No Groove)(W/5 Sets Of Splines)	1	23221-RDK-000
40676B	Countershaft, B36A/P36A (12 1/4" Long)(16 Teeth, 1 Groove)(W/4 Sets Of Splines)	1	23221-R97-000
40676C	Countershaft, MDPA/MDRA (11 13/16" Long)(17 Teeth, 1 Groove)(W/5 Sets Of Splines)	1	
40676D	Countershaft, BYFA (12 1/4" Long)(15 Teeth, 1 Wide Groove)(W/4 Sets Of Splines)	1	23211-RJF-T03
40686A	Oil Guide, BYFA/B36A/MDKA/MDPA/MDRA/P36A 3rd Shaft To Bell Housing (Tin)(.024"Thick) (2.038"OD)(Cast # RDK)	1	23225-RDK-000
40689A	Oil Guide, BYFA/B36A/MDKA/MDPA/MDRA/P36A Countershaft To Bell Housing (Tin) (.023"Thick)(Cast # RDK)	1	23235-RDK-000
40694A	Retainer, MDKA/MDPA/MDRA Horse Shoe Clip # 887 (.124"Thick)(1.965"OD)(1.690"ID)	1	90433-RDK-000
40694B	Retainer, BYFA/B36A/P36A Horse Shoe Clip # 887 (.135"Thick)(2.100"OD)(1.825"ID)	1	90433-RJF-T00
40695-1A	Oil Baffle, MDKA/MDPA/MDRA Differential Housing To Bell Housing (.039"Thick)(3.140"OD) (1.810"ID)(Flat Center)	1	
40695-1B	Oil Baffle, BYFA/B36A/P36A Differential Housing To Bell Housing (.040"Thick)(3.415"OD) (1.807"ID)(Raised Center)	1	
40695A	Oil Baffle, BYFA/MDKA/MDPA/MDRA Differential Housing To Case (.039"Thick)(3.337"OD) (1.812"ID)(No Tab)	1	41382-RDK-000
40695B	Oil Baffle, B36A/P36A Differential Housing To Case (.039"Thick)(3.330"OD)(1.812"ID) (W/1 Large Tab)	1	41382-R36-000
40697A	Oil Guide Collar, BYFA/B36A/MDKA/MDPA/MDRA/P36A In Bell Housing Under Roller Bearing # 238 (Aluminum)(.815"Thick)(1.142"ID)(W/2 Ears)(Uses 2 O-Rings)	1	
40698-1B	Oil Baffle, BYFA/B36A/P36A 3rd Clutch (Tin)(7 1/2"Long)(2 Bolt)	1	21221-RWE-000
40698A	Oil Baffle, MDKA/MDPA/MDRA Bolts To Regulator Body (3 1/4"Tall)(4 1/2"Long)(2 Bolt)	1	21214-RDK-000
40698B	Oil Baffle, BYFA/B36A/P36A Bolts To Regulator Body (5 1/4"Tall)(4 1/2"Long)	1	21214-RWE-000
40699A	Oil Baffle, BYFA/MDKA/MDPA Bolts To Bell Housing (2 Bolt)(1 Piece Type)	1	21612-RDK-010
40699B	Oil Baffle, B36A/P36A Bolts To Bell Housing (2 Bolt)(2 Piece Type)	1	21216-PVL-000
40699C	Oil Baffle, MDRA Bolts To Bell Housing (2 Bolt)(2 Piece Type)	1	
40699J	Oil Baffle, BDGA-1/BWEA Bolts To Bell Housing (2 Bolt, 2 Piece Type)(7 3/4" Long)(5" Wide)	1	
40708A	Gear, BYFA/MDKA/MDPA Transfer Driven (32 Teeth, No Groove)(6.005" Long Shaft)	1	29021-RDK-000
40710A	Gear, MDKA/MDPA/MDRA 4th/Idler (3rd Shaft)(35 Teeth, No Groove)(1.310"Thick)(3.460"OD)	1	23475-RDK-000
40710B	Gear, BYFA/B36A/P36A 4th/Idler (3rd Shaft)(36 Teeth, 2 Groove)(1.310"Thick)(3.550"OD)	1	23475-RWE-000
40712A	Gear, MDKA/MDRA Idler (Countershaft) (44 Teeth, No Groove)(4.067"OD)	1	23515-RDK-000
40712B	Gear, B36A/P36A Idler (Countershaft) (45 Teeth, 1 Wide & 1 Narrow Groove)(4.160"OD)	1	23515-RWE-000
40712C	Gear, MDPA Idler (Countershaft) (44 Teeth, 2 Groove)(4.067"OD)	1	
40712D	Gear, BYFA Idler (Countershaft) (45 Teeth, 3 Groove)(4.160"OD)	1	23515-RWE-000
40714A	Gear, MDKA/MDRA Idler (Secondary Shaft) (53 Teeth, No Groove)(W/4 Notches On 1 Side)	1	23494-RDK-000
40714B	Gear, B36A/P36A Idler (Secondary Shaft) (52 Teeth, 1 Wide & 1 Narrow Groove)(W/4 Notches On Both Sides)	1	23495-RWE-000
40714C	Gear, MDPA Idler (Secondary Shaft) (53 Teeth, 2 Groove)(W/4 Notches On Both Sides)	1	
40714D	Gear, BYFA Idler (Secondary Shaft) (53 Teeth, 3 Groove)(W/4 Notches On Both Sides)	1	23495-RYF-000
40715A	Differential Assembly, MDKA/MDPA (70 Teeth, No Groove Ring Gear)(12 Bolt Housing) (58 Teeth, No Groove AWD Transfer Gear)(Uses A 20 & 24 Roller Bearing)	1	
40715B	Differential Assembly, B36A/P36A (69 Teeth, 1 Wide Groove Ring Gear)(14 Bolt Housing) (Uses A 20 & 21 Roller Bearing)	1	
40715C	Differential Assembly, MDRA (69 Teeth, 1 Narrow Groove Ring Gear)(12 Bolt Housing) (Uses A 20 & 24 Roller Bearing)	1	
40715D	Differential Assembly, BYFA (68 Teeth, 1 Wide Groove Ring Gear)(14 Bolt Housing) (59 Teeth, No Groove AWD Transfer Gear)(Uses A 20 & 21 Roller Bearing)	1	
40715DA	Differential Assembly, P35A (70 Teeth No Groove Ring Gear)(2WD)(14 Bolt Housing)(Uses 20 and 24 Roller Bearing)	1	
40740A	Valve Body, BJFA/BVLA/MDKA/MDPA/MDRA (Cast # RDK)	1	27000-RDK-040

© Whatever It Takes Transmission Parts, Inc.

40740B	Valve Body, BYFA/B36A/B97A/P36A (Cast # R36)	1	27000-RYF-A00
40740G	Valve Body, MURA (Cast # RJB) 2005-Up	1	

PART #	VALVE BODY COMPONENTS	QTY	REFERENCE #
S30741ADK	Valve With End Plug, BDHA/BDKA/BJFA/BK3A/BK4A/BVLA/BWEA/BYFA/B36A/B97A/MDKA/MDPA/MDRA/MJBA/MJFA/MM2A/MURA/MYFA/PN3A/PN4A/PFSA/PVLA/P34A/P35A/P36A		
	Clutch Pressure Control (Must Use Reamer # T-F-98892-TL23)(Sonnax)	1	
T-F-98892-TL23	Reamer For S30741ADK	1	
S30741AP-1	Valve, BDHA/BDKA/BJFA/BK3A/BK4A/BVLA/BWEA/BFYA/B36A/B97A/MDKA/MDPA/MDRA/MJBA/MJFA/MM2A/MURA/MYFA/PN3A/PN4A/PSFA/PVLA/P34A/P35A/P36A Presure		
	Regulator (Lube Regulated)(Sonnax)	1	
S30741BPK	Valve Kit, BDHA/BDKA/BJFA/BK3A/BK4A/BVLA/BWEA/BYFA/B36A/B97A/MDKA/MDPA/MDRA/MJBA/MJFA/MM2A/MURA/MYFA/PN3A/PN4A/PSFA/PVLA/P34A/P35A/P36A Pressure Regulator		
	(Oversize)(Contains: Valve & 2 Springs)(Sonnax)(Must Use T-F-98892-TL13)	1	
T-F-98892-TL13	Reamer Kit For S30741BPK (Contains: Reamer, Jig & Guide Pin)(Sonnax)	1	
S20741EBK	Valve Kit, BVLA/PVLA Lock-Up Shift (Oversize)(Contains: Valve, Sleeve & O-Ringed End Plug)		
	(Sonnax)(Must Use T-F-98892-TL27)	1	
T-F-98892-TL27	Tool For S20741EBK	1	
S40741ECK	Valve Kit, MDKA TC Check (OE Style)(Sonnax)(Also Fits BDKA/BYFA/BWEA/MJBA/BDHA/BK3A/BK4A/MM2A/B97A/P79A/MURA/BBSA/BBTA/B36A/P36A/P34A/P35A/PN3A/PN4A/BJFA/MJFA/PSFA/MDPA/MDRA)	1	
S40741ECOK	Valve Kit, MDKA TC Check (O-Ring Type)(Sonnax)(Also Fits BDKA/BYFA/BWEA/MJBA/BDHA/BK3A/BK4A/MM2A/B97A/P79A/MURA/BBSA/ BBTA/B36A/P36A/P34A/P35A/PN3A/PN4A/BJFA/MJFA/PSFA/MDPA/MDRA)	1	
20741ELK	Lube Kit, BDKA/BJFA/BYFA/B36A/B97A/MDPA/MDRA/MJBA/MJFA/PSFA/P34A/P35A/P36A (Corrects Overheating Converter)(Fixes Up To 6 Transmissions)	1	
40742-3A	Plate, MDKA/MDPA/MDRA Secondary Valve Body To Valve Body (Separator Plate)	1	
40742-3B	Plate, BYFA/B36A/P36A Secondary Valve Body To Valve Body (Separator Plate)	1	

PART #	HARDPARTS (Continued)	QTY	REFERENCE #
40742A	Secondary Valve Body, MDKA/MDPA/MDRA (Cast # RDK)	1	
40742B	Secondary Valve Body, BYFA/B36A/P36A (Cast # R36)	1	
40747A	Plate, MDKA/MDPA/MDRA Valve Body (Separator Plate)	1	27112-RDK-020
40747B	Plate, BYFA/B36A/P36A Valve Body (Separator Plate)	1	27112-RWE-000
40750A	Bell Housing, MDKA (2003-04)/MDPA (AWD)(24 Bolts To Case)(5 1/4” Top Bolts)(Cast # RDK) (Hole For Parking Pawl Pin #995 Is 0.710”ID)	1	21111-RDK-306
40750AA	Bell Housing, MDKA (2005-06)(24 Bolts To Case)(5 1/4” Top Bolts)(Hole For Parking Pawl Pin #995 is 0.625”ID)	1	
40750B	Bell Housing, B36A/P36A (23 Bolts To Case)(5 1/4” Top Bolts)(Cast # R36)	1	21110-R36-305
40750C	Bell Housing, MDRA (24 Bolts To Case)(5 1/4” Top Bolts)(Cast # RDR)	1	
40750D	Bell Housing, BYFA (24 Bolts To Case)(5 1/4” Top Bolts)	1	21110-RYF-305
40750E	Bell Housing, BJFA (24 Bolts To Case)(Cast # RJFT)(4x4) 2006-Up	1	
40750G	Bell Housing, MURA (23 Bolts To Case)(Cast # RCK) 2005-Up	1	
40750H	Bell Housing, BVLA (24 Bolts To Case)(Cast # RDKD)(2wd, But Looks Like A 4x4) 2006-Up	1	21110-RDK-308
40756A	Cover, MDKA/MDPA/MDRA Solenoid (7 Bolt, Aluminum)	1	28450-RDK-000
40756B	Cover, BYFA/B36A/P36A Solenoid (7 Bolt, Aluminum)(Cast # RJF)	1	28450-RJF-T00
40757A	Rear Cover, MDKA/MDPA/MDRA Mainshaft (3 Bolt)(Cast # RDK)	1	21240-RDK-000
40757B	Rear Cover, BYFA/B36A/P36A Mainshaft (3 Bolt)(Cast # RJF)	1	21230-RJF-T00
40758A	Cap, MDKA/MDPA/MDRA (Case, Rear At Countershaft)(2 Bolt)(Cast # RDK)	1	21251-RDK-010
40758B	Cap, BYFA/B36A/P36A (Case, Rear At Countershaft)(2 Bolt)(Cast # RJB)	1	21251-RJB-000
40760A	Case, MDKA/MDRA (24 Bolts To Bell) (Top Switch # 439 Points Up)(Has 3 Slots By Axle Seal)	1	21010-RDK-305
40760B	Case, B36A/P36A (23 Bolts To Bell)(Cast # RDH Or R36)(Has 1 Curved Slot By Axle Seal) (Bearing 274 Is 3.660”OD)	1	21210-R36-000
40760BA	Case, B36A/P36A (23 Bolts To Bell)(Cast # RDH Or R36)(Has 1 Curved Slot By Axle Seal) (Bearing 274 Is 3.700”OD)	1	
40760CC	Case, MDPA (24 Bolts To Bell) (Top Switch # 439 Points To The Rear)(Has 3 Slots By Axle Seal)	1	
40760D	Case, BYFA (24 Bolts To Bell) (Has 1 Slot By Axle Seal)(Cast # RWE)	1	21210-RYF-010
40769A	Cover, BYFA/B36A/MDKA/MDPA/MDRA/P36A Canister Filter (2 Bolt)(Cast # RJB Or No Cast #)	1	25471-RJB-000
40781AK	Bolt Set, BYFA/B36A/MDKA/MDPA MDRA/P36A Solenoid Cover To Case (7 Pieces)	1	
40782AK	Bolt Set, BYFA/B36A/MDKA/MDPA/MDRA/P36A Valve Body To Case (10 Pieces)	1	
40783A	Bolt, BYFA/B36A/MDKA/MDPA/MDRA/P36A Holds Bracket # 846 To Bell Housing	1	92101-06020-0A
40786AK	Bolt Set, MDKA/MDPA Differential & Transfer Gear (12 Pieces)	1	
40786BK	Bolt Set, B36A/P36A Differential Ring Gear (14 Pieces)	1	
40786CK	Bolt Set, MDRA Differential Ring Gear (12 Pieces)	1	
40786DK	Bolt Set, BYFA Differential & Transfer Gear (14 Pieces)	1	
40789AK	Bolt Set, BYFA/B36A/MDKA/MDPA/MDRA/P36A Linear Solenoid Housing To Case (6 Pieces)	1	

© Whatever It Takes Transmission Parts, Inc.

PART #	HARDPARTS (Continued)	QTY	REFERENCE #
40792AK	Bolt Set, MDKA/MDPA/MDRA Accumulator To Case (11 Pieces)	1	
40792BK	Bolt Set, BYFA/B36A/P36A Accumulator To Case (11 Pieces)	1	
40795A	Nut, BJFA/BVLA/FYFA/B36A/B97A/MDKA/MDPA/MDRA/MURA/P36A (Mainshaft)(Right Hand Thread)(Also Fits BJFA/BVLA/FYFA/B36A/B97A/MDKA/MDPA/MDRA/MURA/P36A (Secondary Shaft # 797)	1-2	90201-RDK-000
40796A	Nut, BFYA/B36A/MDKA/MDPA/MDRA/P36A (Countershaft)(Left Hand Thread)(.515"Thick)	1	90201-PRP-000
40801A	Gear, MDKA/MDPA/MDRA 1st (Countershaft) (59 Teeth, No Groove)(5.970"OD)	1	23421-RDK-010
40801B	Gear, B36A/P36A 1st (Countershaft) (61 Teeth, 1 Wide Groove)(5.970"OD)	1	23421-R36-000
40801D	Gear, BYFA 1st (Countershaft)(61 Teeth, 1 Wide & 1 Narrow Groove)(5.970"OD)	1	23421-RYF-000
40801E	Gear, BJFA 1st (Countershaft)(59 Teeth, 2 Groove) 2006-Up	1	
40801G	Gear, MURA 1st (Countershaft)(61 Teeth, 1 Narrow Groove) 2005-Up	1	
40801H	Gear, BVLA 1st (Countershaft)(57 Teeth, 2 Groove) 2006-Up	1	
40802A	Gear, BJFA/MDKA/MDPA/MDRA 1st (Secondary Shaft)(27 Teeth)(Can Have No Groove Or 2 Grooves)(2.960"OD)	1	23411-RDK-A00
40802AK	Gear Assembly, BJFA/MDKA/MDPA/MDRA 1st (Secondary Shaft)(27 Teeth)(Can Have No Groove Or 2 Grooves)(2.960"OD)(Contains: #802 to #577)	1	
40802B	Gear, BYFA/B36A/P36A 1st (Secondary Shaft)(28 Teeth, 1 Wide Groove)(2.935"OD)	1	23411-RYF-000
40802BK	Gear Assembly, BYFA/B36A/B97A/P36A 1st (Secondary Shaft)(28 Teeth, 1 Wide Groove)(2.935"OD)(Contains #802 To #577)	1	
40802G	Gear, MURA 1st (Secondary Shaft)(28 Teeth, 1 Groove)(2.935"OD)	1	
40802GK	Gear Assembly, MURA 1st (Secondary Shaft)(28 Teeth, 1 Groove)(2.935"OD)(Contains #802 To #577)	1	
40802H	Gear, BVLA 1st (Secondary)(29 Teeth, 2 Groove)(3.115"OD)	1	
40802HK	Gear Assembly, BVLA 1st (Secondary Shaft)(29 Teeth, 2 Groove)(3.115"OD)(Contains #802 To #577)	1	
40803A	Gear, BYFA/MDKA/MDPA/MDRA 2nd (Secondary Shaft)(37 Teeth, No Groove Or 2 Groove)	1	
40803B	Gear, B36A/P36A 2nd (Secondary Shaft) (37 Teeth, 1 Groove)	1	
40804A	Gear, MDKA/MDPA/MDRA 2nd (Countershaft) (47 Teeth, No Groove)(4.970"OD)	1	23441-RDK-000
40804B	Gear, B36A/P36A 2nd (Countershaft) (48 Teeth, 1 Wide Groove)(5.030"OD)	1	23441-R36-000
40804D	Gear, BYFA 2nd (Countershaft)(48 Teeth, 2 Groove)(5.030"OD)	1	23441-RWE-000
40807A	Gear, BVLA/MDKA/MDPA/MDRA/MURA 3rd (3rd Shaft)(44 Teeth, No Groove)(4.070"OD)(42 Teeth Clutch Hub)	1	23451-RDK-000
40807B	Gear, BYFA/B36A/P36A 3rd (3rd Shaft) (45 Teeth, 1 Wide & 1 Narrow Groove)(2.495"Thick)(4.160"OD)(42 Teeth Clutch Hub)	1	23451-RWE-000
40807BB	Gear, B97A 3rd (3rd Shaft)(45 Teeth, 1 Wide & 1 Narrow Groove)(32 Teeth Clutch Hub)	1	
40807D	Gear, BYFA/B36A/P36A 3rd (3rd Shaft)(45 Teeth, 3 Groove)(2.580"Thick)(4.160"OD)(42 Teeth Clutch Hub)	1	23451-RYF-000
40807E	Gear, BJFA 3rd (3rd Shaft)(44 Teeth, 2 Grooves)(42 Teeth Clutch Hub)	1	
40809A	Gear, MDKA/MDPA/MDRA 4th (Mianshaft) (48 Teeth, No Groove)(44 Clutch Splines)(Gear Only)	1	23461-RDK-000
40809BK	Gear W/Bearing, BYFA/B36A/P36A 4th (Mainshaft)(47 Teeth, 1 Wide & 1 Narrow Groove)(44 Clutch Splines)(Contains: Gear, Bearing, & Snap Ring)	1	23461-RYF-305
40810A	Gear, MDKA/MDPA/MDRA 4th (Countershaft) (35 Teeth, No Groove)(3.460"OD)	1	23471-RDK-000
40810B	Gear, BYFA/B36A/P36A 4th (Countershaft) (36 Teeth, 1 Wide & 1 Narrow Groove) (3.550"OD)	1	23471-RWE-000
40812A	Gear, MDKA/MDPA/MDRA 5th (Mainshaft) (27 Teeth, No Groove)(49 Teeth, No Groove)(44 Teeth Clutch Hub)	1	23481-RDK-000
40812B	Gear, B36A/P36A 5th (Mainshaft)(27 Teeth, No Groove)(52 Teeth, 1 Wide Groove)(44 Teeth Clutch Hub)	1	23481-RYF-000
40812D	Gear, BYFA 5th (Mainshaft)(27 Teeth, No Groove)(52 Teeth, 1 Narrow Groove)(44 Teeth Clutch Hub)	1	23481-RYF-000
40813A	Gear, MDKA/MDPA/MDRA 5th (Countershaft) (26 Teeth, No Groove)(2.918"OD)(1.615"ID)	1	23491-RDK-000
40813B	Gear, B36A/P36A 5th (Countershaft)(28 Teeth, 1 Wide Groove)(2.915"OD)(1.615"ID)	1	23491-RYF-000
40813D	Gear, BYFA 5th (Countershaft)(28 Teeth, 1 Narrow Groove)	1	
40816A	Gear, BYFA/B36A/MDKA/MDPA/MDRA/P36A Reverse (Countershaft)(51 Teeth, No Groove)(4.790"OD)(1.870"ID)	1	23531-RDK-000
40818A	Gear, BYFA/B36A/MDKA/MDPA/MDRA/P36A Reverse Idler (28 Teeth, No Groove Or 1 Groove)	1	23541-RDK-000
40820A	Bracket W/Shaft, MDKA Reverse Idler Gear (2 Bolt, Aluminum)(2.280"Wide)	1	21215-RDK-010
40820B	Bracket W/Shaft, BYFA/B36A/MDPA/MDRA/P36A Reverse Idler Gear (2 Bolt, Aluminum)(1.670"Wide)	1	21215-R36-000
40830A	Selector, BYFA/B36A/MDKA/MDPA/MDRA/P36A Reverse (.588"Thick)(Left Angled Teeth On Reverse Side, Pointed Teeth On 5th Gear Side)	1	23565-RDK-000
80535	Pin, BYFA/B36A/MDKA/MDPA/MDRA/P36A Pump Gear	1	
30835B	Hub, BYFA/B36A/MDKA/MDPA/MDRA/P36A Reverse (26 Teeth)(.473"Thick)(30 Splines)	1	23566-RDK-000
40840A	Fork, BJFA/BVLA/BYFA/B36A/B97A/MDKA/MDPA/MDRA/MURA/P36A Reverse (2.460"ID At Forks)	1	24111-RYF-000
40846A	Bracket, BYFA/B36A/MDKA/MDPA/MDRA/P36A Holds Bearing # 238 In Bell Housing (.072"Thick)(.867"Long)(1 Bolt)	1	21101-PRP-000

© Whatever It Takes Transmission Parts, Inc.

40851A	Cushion, MDKA/MDRA/MDPA 5th Clutch (.056”Thick)(4.407”OD)(3.913”ID)(Wavy, Split) (Also Fits MDKA/MDRA 4th Clutch # 850)	1	22536-RAY-003
40851B	Cushion, BJFA/BVLA/BYFA/B36A/B97A/MDKA/MDPA/MDRA/MURA/P36A 5th Clutch (.061”Thick)(4.723”OD)(4.255”ID)(Dished, Solid) (Also Fits BJFA/BVLA/BYFA/B36A/B97A/MDKA/ MDPA/MDRA/MURA/P36A 4th Clutch # 850)	1	22537-PVL-003
40851C	Cushion, MDPA 5th Clutch (.064”Thick)(Dished, Solid)(Also Fits MDPA 4th Clutch # 850)	1	
40852A	Cushion, BYFA/B36A/MDKA/MDPA/MDRA/P36A 2nd Clutch (.057”Thick)(4.335”OD)(3.870”ID) (Dished)	1	
40853A	Cushion, BYFA/B36A/MDKA/MDPA/MDRA/P36A Low Clutch (.070”Thick)(4.585”OD)(4.110”ID) (Dished)	1	22537-POZ-003
40857A	Cushion, BYFA/B36A/MDKA/MDPA/MDRA/P36A Low Clutch (.083”Thick)(4.685”OD)(4.180”ID) (Dished)	1	22539-RDK-013
40858A	Cushion, MDKA/MDPA/MDRA 3rd Clutch (.059”Thick)(4.450”OD)(3.880”ID)(Dished)	1	22539-PAX-003
40858B	Cushion, B36A/P36A 3rd Clutch (.070”Thick)(4.360”OD)(3.907”ID)(Dished)	1	22539-RJF-003
40858D	Cushion, BYFA 3rd Clutch (.071”Thick)(4.450”OD)(3.945”ID)(Dished)	1	
40862-1A	Snap Ring, BYFA/B36A/MDKA/MDPA/MDRA/P36A Holds 3rd Clutch Spring Retainer In (.058”Thick)(1.815”ID)	1	90603-PL4-000
40862A	Use U30877A	1	
40864A	Snap Ring, BYFA/B36A/MDKA/MDPA/MDRA/P36A Holds 5th Clutch Pressure Plate In (.071”Thick)(5.520”OD) (Also Fits BYFA/B36A/MDKA/MDPA/MDRA/P36A 4th Clutch # 861 & Low Clutch # 876)	1-2	90605-POZ-000
80870	Snap Ring, BYFA/B36A/MDKA/MDPA/MDRA/P36A Holds Bearing In Stator (Front)	1	
40873A	Snap Ring, BYFA/B36A/MDKA/MDPA/MDRA/P36A Holds 2nd Clutch Pressure Plate In (.071”Thick)(5.055”OD)	1	90605-PX4-000
40874A	Snap Ring, BYFA/B36A/MDKA/MDPA/MDRA/P36A Holds 2nd Clutch Spring Retainer In (.059”Thick)(1.800”OD)	1	90603-P56-N00
30877A	Snap Ring, BYFA/B36A/MDKA/MDPA/MDRA/P36A Holds 5th Clutch # 865 & 4th Clutch # 862 & Low Clutch # 877 (.058”Thick)(1.925”OD)	1	90603-POZ-000
40877-1B	Horse Shoe Clips, BYFA/B36A/P36A 2nd Gear Stop (Countershaft)(.295”Thick)(2.280”Long) (2 Per Pack)	1	90430-RJF-T00
40878A	Snap Ring, BYFA/B36A/MDKA/MDPA/MDRA/P36A Holds 3rd Clutch Pressure Plate In (.071”Thick)(5.380”OD)	1	90605-PY4-000
40879A	Snap Ring, BYFA/B36A/MDKA/MDPA/MDRA/P36A Holds Bearing # 214 To Mainshaft (.047”Thick)(1.190”OD)	1	90603-P4R-000
40880A	Snap Ring, BYFA/B36A/MDKA/MDPA/MDRA/P36A Holds Bearing # 235 To Case (.077”Thick)(3.355”OD)	1	90615-POZ-000
40881A	Snap Ring, BYFA/B36A/MDKA/MDPA/MDRA/P36A Holds 2nd Clutch Drum To Secondary Shaft (.047”Thick)(1.275”OD)	1	90621-RDK-000
40882A	Snap Ring, BYFA/MDKA/MDPA/MDRA Holds Ball Bearing # 220 In 4th Gear (Mainshaft) (.099”Thick)(3.240”OD)	1	90606-RDK-000
40882B	Snap Ring, B36A/P36A Holds Ball Bearing # 220 In 4th Gear (Mainshaft)(.117”Thick) (3.240”OD)	1	
40883A	Snap Ring, BYFA/B36A/MDKA/MDPA/MDRA/P36A Holds 2nd Gear (Secondary Shaft) To 2nd Clutch Hub (.040”Thick)(2.867”OD)	1	
40885A	Snap Ring, BYFA/B36A/MDKA/MDPA/MDRA/P36A Holds Ball Bearing # 297 In Low Clutch Hub (.040”Thick)(3.295”OD)	1	
40886A	Snap Ring, MDKA/MDPA/MDRA Holds 4th Gear To Countershaft (.048”Thick)(1.865”OD)	1	90608-RDK-000
40886B	Snap Ring, BYFA/B36A/P36A Holds 4th Gear To Countershaft (.048”Thick)(1.970”OD)	1	90608-RJF-T00
40887A	Horse Shoe Clips, MDKA/MDPA/MDRA Holds 4th Gear To Countershaft (.079”Thick) (1.883”Long)(2 Per Pack)	1	90442-RDK-000
40887B	Horse Shoe Clips, BYFA/B36A/P36A Holds 4th Gear To Countershaft (.079”Thick)(1.993”Long) (2 Per Pack)	1	90431-RJF-T00
40889-1A	Retainer, BYFA/B36A/MDKA/MDPA/MDRA/P36A Holds Horse Shoe Clips # 889 To 3rd Shaft (.175”Thick)(1.270”OD)(.972”ID)(Cupped)	1	90432-RDK-000
40889A	Retainer, BYFA/B36A/MDKA/MDPA/MDRA/P36A Holds 4th/Idle Gear Gear To 3rd Shaft (.118”Thick)(2 Per Pack)(Horse Shoe Clips)	1	90430-RDK-000
40890A	Snap Ring, MDKA/MDPA/MDRA Holds Countershaft Bearing # 274 To Case (.077”Thick) (3.785”OD)	1	90612-RDK-T00
40890B	Snap Ring, BYFA/B36A/P36A Holds Countershaft Bearing # 274 To Case (.077”Thick) (3.820”OD)	1	90612-RJF-T00
40891A	Snap Ring, BYFA/B36A/MDKA/MDPA/MDRA/P36A Holds Reverse Idler Gear To Shaft (.040”Thick)(.570”OD)	1	90615-RDK-000
40892A	Snap Ring, BYFA/B36A/MDKA/MDPA/MDRA/P36A Holds Feed Pipe B To Feed Pipe C Cap (.071”Thick)(1.685”OD)(W/2 Eyelets)	1	90602-RDK-000
40893A	Snap Ring, BYFA/B36A/MDKA/MDPA/MDRA/P36A Holds Pipe Cap C Into Case (.056”Thick) (2.590”OD)	1	90460-RDK-000
40895A	Snap Ring, BYFA/B36A/MDKA/MDPA/MDRA/P36A Holds 3rd Shaft Retainer # 889-1 In (.046”Thick)(1.115”OD)	1	90601-RDK-000
40897A	Snap Ring, BYFA/B36A/MDKA/MDPA/MDRA/P36A Holds Linkage Assembly In Case (.040”Thick)(.575”OD)	1	94510-12000

© Whatever It Takes Transmission Parts, Inc.

PART #	HARDPARTS (Continued)	QTY	REFERENCE #
40900-3A	Plate, MDKA/MDPA/MDRA Accumulator To 2nd Body Separator	1	27812-RDK-000
40900-3B	Plate, BYFA/B36A/P36A Accumulator To 2nd Body Separator	1	27812-RJB-E00
40900A	Accumulator, MDKA/MDPA/MDRA W/Pistons (Cast # RDK)	1	
40900B	Accumulator, BYFA/B36A/P36A W/Pistons (Cast # RJB)	1	
40924-3A	Plate, MDKA/MDPA/MDRA Regulator Separating (21 Round Holes)	1	27212-RDK-000
40924-3B	Plate, BYFA/B36A/P36A Regulator Separating (19 Round Holes)	1	27212-RJB-E00
40924A	Regulator Body Assembly, BVLA/MDKA/MDPA/MDRA (Cast # RDK)(Less Plate)	1	27200-RDK-030
40924B	Regulator Body Assy, BYFA/B36A/P36A (Cast # RWE)(Less Plate)	1	27200-R36-A00
40958A	Retainer/Guide, BYFA/B36A/MDKA/MDPA/MDRA/P36A Feed Pipe A (.142”Thick)(1.450”OD)(.458”ID)(Cast # PW4)	1	22713-PW4-000
40961A	Piston, MDKA/MDPA/MDRA 5th Clutch (.345”Thick At The Edge)(4.985”OD)(1.730”ID)(Also Fits MDKA/MDPA/MDRA 4th Clutch # 960)	1-2	22680-RDK-003
40961B	Piston, BYFA/B36A/P36A 5th Clutch (.320”Thick At The Edge)(4.985”OD)(1.730”ID)(Also Fits BYFA/B36A/P36A 4th Clutch # 960)	1-2	22690-RYF-003
40962A	Piston, BYFA/B36A/MDKA/MDPA/MDRA/P36A 2nd Clutch (.340”Thick At The Edge)(4.710”OD)(1.705”ID)	1	22620-RDK-053
40965A	Piston, MDKA/MDPA/MDRA 3rd Clutch (.355”Thick At Edge)	1	22670-RDK-003
40965B	Piston, B36A/P36A 3rd Clutch (.375”Thick At Edge)(4.870”OD)(1.665”ID)	1	22670-PVL-003
40965D	Piston, BYFA 3rd Clutch (.355”Thick At Edge)(4.985”OD)(1.665”ID)	1	22670-RYF-013
40967A	Piston, BYFA/B36A/MDKA/MDPA/MDRA/P36A Low Hold Clutch (.470”Thick)(4.560”OD)(2.050”ID)	1	22570-RDK-013
40969A	Piston, BYFA/B36A/MDKA/MDPA/MDRA/P36A Low Clutch (1.250”Thick)(5.380”OD)(Steel)	1	22520-RDK-003
40971A	Spring, MDKA/MDPA/MDRA 5th Clutch Return (.277”OD Of The Wire)(2.695”OD) (Also Fits BYFA/B36A/MDKA/MDPA/MDRA/P36A 4th Clutch # 970)	1-2	22642-RDK-003
40971B	Spring, BYFA/B36A/P36A 5th Clutch Return (.275”OD Of The Wire)(2.708”OD)	1	22642-RYF-003
40972A	Spring, BYFA/B36A/MDKA/MDPA/MDRA/P36A 2nd Clutch Return (.245”OD Of The Wire)(2.515”OD)	1	22641-RDK-003
40975A	Spring, BYFA/B36A/MDKA/MDPA/MDRA/P36A 3rd Clutch Return (.275”OD Of Wire)(2.520”OD)	1	22652-P7W-003
40977A	Spring, MDKA/MDPA/MDRA Low/Low Hold Clutch Return (2.295”Long)(2.880”OD)	1	22542-P7W-003
40977B	Spring, BYFA/B36A/P36A Low/Low Hold Clutch Return (2.180”Long)(2.895”OD)	1	22542-P7W-003
40981A	Retainer, MDKA/MDPA/MDRA 5th Clutch Spring (.185”Thick)(2.667”OD)(1.748”ID)(Flat)(Also Fits BYFA/B36A/MDKA/MDPA/MDRA/P36A 4th Clutch Retainer # 980)	1-2	22533-RDK-003
40981B	Retainer, BYFA/B36A/P36A 5th Clutch Spring (.425”Thick)(2.895”OD)(1.748”ID)(Cupped)	1	22654-RJB-003
40982A	Retainer, BYFA/B36A/MDKA/MDPA/MDRA/P36A 2nd Clutch Spring (.205”Thick)(2.510”OD)(1.715”ID)	1	22633-RDK-003
40983-1A	Retainer, BYFA/B36A/MDKA/MDPA/MDRA/P36A 2nd Clutch Hub To 2nd Gear (Secondary Shaft)(.365”Thick)(3.233”OD)(2.825”ID)	1	
40983A	Retainer, BYFA/B36A/MDKA/MDPA/MDRA/P36A 2nd Gear (Secondary Shaft) To Snap Ring # 883 (.080”Thick)(2 Per Pk)(Horse Shoe Clips)	1	
40985A	Use 20985E	1	22654-P7W-003
20985E	Retainer, BYFA/B36A/MDKA/MDPA/MDRA/P36A 3rd Clutch Spring (2.725”OD)(1.672”ID)(Cupped)	1	
40987A	Retainer, BYFA/B36A/MDKA/MDPA/MDRA/P36A Low/Low Hold Clutch Spring (.380”Thick)(2.863”OD)(1.748”ID)	1	22533-P7W-003
40991-1A	Detent, BYFA/B36A/MDKA/MDPA/MDRA/P36A Rooster Comb	1	24630-RDK-000
40991-5A	Shaft, BYFA/B36A/MDKA/MDPA/MDRA/P36A Rooster Comb Detent (3.242”Long)(.195”OD)	1	
40991A	Linkage Assembly, MDKA/MDPA/MDRA Internal (9 5/8”Long Shift Rod)	1	24000-RDK-000
40991B	Linkage Assembly, BYFA/B36A/P36A Internal (9 1/2”Long Shift Rod)	1	24000-RWE-000
40992A	Shift Lever, MDKA/MDPA/MDRA External (3 3/16”Long)(W/Pin For Grommet)	1	24412-RDK-010
40992B	Shift Lever, BYFA/B36A/P36A External (3 1/16”Long)(W/Hole For External Linkage)(Cast # SHJ)	1	54313-SJA-A81
40995A	Park Pawl Assembly, BJFA/BVLA/MDKA/MDPA/MDRA (3 Pieces)(Pin #995-2 Has 3 Steps Measureing 0.550”OD, 0.710”OD, 0.625”OD)	1	
40995B	Park Pawl Assembly, BYFA/B36A/B97A/ MDKA (2005-06) /MURA/P36A (3 Pieces)(Pin #995-2 Had 2 Steps That Measure 0.550”OD, 0.625”OD)	1	
40999-1A	Oil Tube, BYFA/B36A/MDKA/MDPA/MDRA/P36A In The Bell Housing (“U” Shaped)(5 3/8”Long)(W/1 Bolt Bracket)	1	22770-RDK-000
40999-3A	Tube Set, MDKA/MDPA/MDRA Accumulator To Case & To Valve Body (10 Pieces)	1	
40999-3B	Tube Set, BYFA/B36A/P36A Accumulator To Case & To Valve Body (10 Pieces)	1	
40999-4A	Tube Set, BYFA/B36A/MDKA/MDPA/MDRA/P36A Linear Solenoid # 425 (3 Pieces)	1	
40999-5A	Oil Tube, BJFA/BVLA/B97A/MDKA/MDPA/MDRA/MURA/P36A Secondary Shaft (Pipe B)(2.070”Long)(W/2 Ears)	1	22725-RDK-000
40999-5B	Oil Tube, BYFA/B36A Secondary Shaft (Pipe B)(1.785”Long)(W/2 Ears)	1	
40999-6A	Oil Tube/Cap Assembly, MDKA/MDPA/MDRA Secondary Shaft (Pipe C)(3.690” Overall Length)(1 Tab)(Cast # RDK)	1	21260-RDK-000
40999-6B	Oil Tube/Cap Assembly, B36A Secondary Shaft (Pipe C)(3.690” Overall Length)(2 Tab)(Cast # RJF)	1	21251-RJB-000

© Whatever It Takes Transmission Parts, Inc.

40999-6D	Oil Tube/Cap Assembly, BYFA/P36A Secondary Shaft (Pipe C)(3.345” Overall Length)(2 Tab) (Cast # RJF)	1	21260-RJF-T00
40999A	Oil Tube, BYFA/B36A/MDKA/MDPA/MDRA/P36A Canister Filter Cover To Case (1 Bolt Bracket) (W/4 Bends)	1	25475-RDK-010

© Whatever It Takes Transmission Parts, Inc.

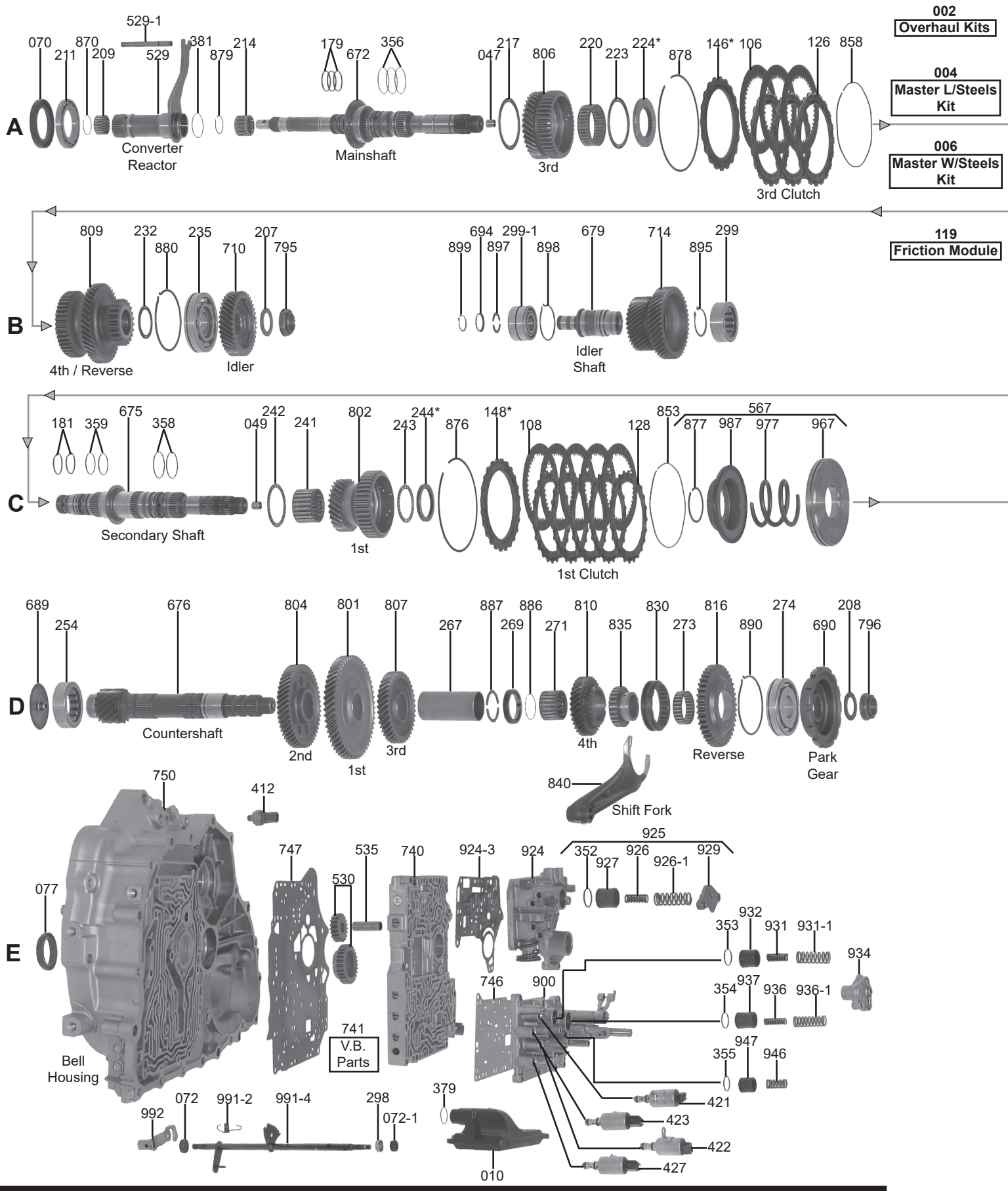
A
070
211
870
209
529-1
529
381
879
214
Converter
Reactor
179
672
356
Mainshaft
047
217
806
3rd
220
223
224*
878
146*
106
126
858
3rd Clutch
002
Overhaul Kits
004
Master L/Steels
Kit
006
Master W/Steels
Kit
119
Friction Module
B
809
232
880
235
710
207
795
4th / Reverse
Idler
694
899
897
299-1
898
679
Idler
Shaft
714
895
299
C
181
359
675
358
Secondary Shaft
049
242
241
802
1st
243
244*
876
148*
108
128
853
567
877
987
977
967
1st Clutch
D
689
254
676
Countershaft
804
2nd
801
1st
807
3rd
267
887
269
886
271
810
4th
835
830
273
816
Reverse
890
274
Park
Gear
690
208
796
840
Shift Fork
E
750
412
077
Bell
Housing
747
530
535
741
V.B.
Parts
740
924-3
924
925
352
927
926
926-1
929
932
353
931
931-1
934
746
900
354
937
936
936-1
947
355
946
421
423
422
427
379
010
992
072
991-2
991-4
298
072-1

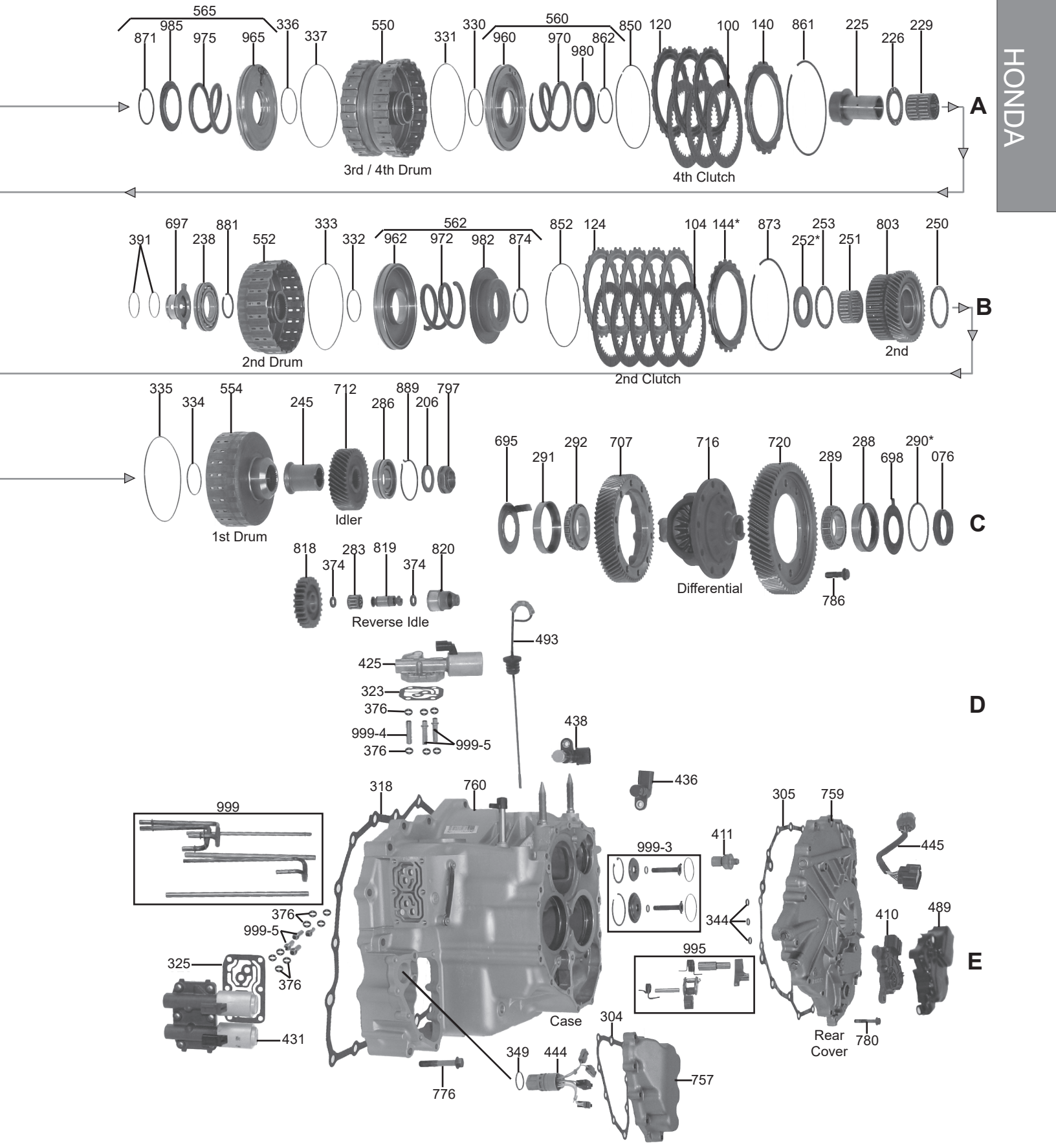

1-800-940-0197

© Whatever It Takes Transmission Parts. Inc.

PART #	OVERHAUL KITS	QTY	REFERENCE #
50002A	Overhaul Kit, BZKA-5/BZKA-6/BZKA-7/GPPA-2/MCVA/MRVA/MZKA-1/MZKA-2/ MZKA-3/MZKA-4/ MZKA-8 02-05	1	

PART #	MASTER L/STEELS KIT	QTY	REFERENCE #
50004B	Master L/Steels Kit, BZKA/GPPA/MCVA/MRVA/MZKA 2002-05 (For Bonded Retainers Sell 2 Pieces of A160987A)	1	

PART #	MASTER W/STEELS KIT	QTY	REFERENCE #
50006B	Master W/Steels Kit, BZKA/GPPA/MCVA/MRVA/MZKA 2002-05 (For Bonded Retainer Sell 2 Pieces Of A160987A)	1	

PART #	FILTERS	QTY	REFERENCE #
160010A	Filter, BCLA/GPLA/GPPA-3/MCTA/MKYA/MKZA/MRMA (Square Pick-Up Near The Edge) 2002-08 (Also Fits BZKA-5/BZKA-6/BZKA-7/GPPA-2/MCVA/MRVA 2002-05)	1	F402

PART #	BUSHINGS	QTY	REFERENCE #
50047A	Bushing, BZKA-5/GPPA-2/MCVA/MRVA/MZKA-1/MZKA-2 Mainshaft (.398”Wide)(.415”OD) (.315”ID) 2002-06	1	
50049A	Bushing, BZKA-5/GPPA-2/MCVA/MRVA/MZKA-2 Secondary Shaft (.420” Wide)(.420”OD) (.315”ID) 2002-06	1	

PART #	METAL CLAD SEALS	QTY	REFERENCE #
60070A	Seal, BZKA-5/BZKA-6/BZKA-7/GPPA-2/MCVA/MRVA/MZKA-1/MZKA-2MZKA-3/MZKA-4/ MZKA-8 Converter (44 X 68 X 8mm) Counter Clockwise Helix	1	91207-P7Z-003
50072-1A	Seal, BZKA-5/GPPA-2/MCVA/MRVA/MZKA-1/MZKA-2 Manual Shaft (In Rear Cover)(.275”Thick) (.715”OD) 2002-06	1	91201-PA9-004
30076A	Seal, BZKA-5/GPPA-2MCVA/MRVA/MZKA-1/MZKA-2 Case Side # 076 2002-06 (35X54X8mm)	1	91207-PH8-005
50077A	Seal, BZKA/MCVA/MRVA/MZKA Axle (Bell Housing Side)(35 X 58 X 8mm) 2002-06	1	91206-PHR-003

PART #	FRICTIONS	QTY	REFERENCE #
50100A	Friction, BZKA-5/GPPA-2/MCVA/MRVA/MZKA-1/MZKA-2 4th Clutch (.076”)(44 Teeth W/2 Missing)(4.845”ID) 2002-06 (Also Fits BZKA-5/GPPA-2/MCVA/MRVA/MZKA-1/MZKA-2 3rd Clutch # 106	3-6	22546-PPV-A01
50104A	Friction, BZKA/MCVA/MRVA/MZKA 2nd Clutch (.078”)(44 Teeth)(4.672”OD) 2003-06 (Also Fits BCLA/GPLA/GPPA-3/GPPA-4/MCTA/MKYA/MZKA/MRMA 2002-08)	5	22545-PRP-013
50106A	Use 50100A.	3	
50108A	Friction, BZKA/MCVA/MRVA/MZKA 1st Clutch (.076”)(44 Teeth)(4.671”OD) 2002-06 (Also Fits MCTA 4th Clutch #102 & 5th Clutch #100 2004)(Also Fits BCLA/GPPA-3/GPPA-4/ MKYA/MZKA/MRMA #106 & #108 2002-06)	5	22544-PRP-003
50119A	Friction Moducle, BZKA/MCVA/MRVA/MZKA 4 Speed 2003-Up (W/GPX Frictions)	1	

PART #	STEELS	QTY	REFERENCE #
50120B	Steel, BZKA-5/GPPA-2/MCVA/MRVA/MZKA-1/MZKA-2 4th Clutch (.091”)(20 Teeth)(3.695”ID) 2002-06 (Also Fits BZKA-5/GPPA-2/MCVA/MRVA/MZKA-1/MZKA-2 3rd Clutch # 126 2002-06	3-6	22653-PPV-A01
50124A	Steel, BZKA-5/GPPA-2/MCVA/MRVA/MZKA-1/MZKA-2 2nd Clutch (.079”)(24 Teeth)(3.670”ID) 2002-06 (USE 80128A)	5	22643-RCL-003
50126A	Use 50120B	3	
50128A	Steel, BZKA-5/GPPA-2/MCVA/MRVA/MZKA-1/MZKA-2 1st Clutch (.064”)(24 Teeth)(4.988”OD) (3.670”ID) 2002-06	5	22543-RCL-003

PART #	PRESSURE PLATES	QTY	REFERENCE #
50140AA	Pressure Plate, BZKA-5/GPPA-2/MCVA/MRVA/MZKA-1/MZKA-2 4th Clutch (.082”)(#1) (20 Teeth)(3.695”ID) 2002-06 (Also Fits BZKA-5/GPPA-2/MCVA/MRVA/MZKA-1/MZKA-2 3rd Clutch # 146 2002-06)	1-2	22571-PPV-A01
50140AB	Pressure Plate, BZKA-5/GPPA-2/MCVA/MRVA/MZKA-1/MZKA-2 4th Clutch (.085”)(#1) (20 Teeth)(3.695”ID) 2002-06 (Also Fits BZKA-5/GPPA-2/MCVA/MRVA/MZKA-1/MZKA-2 3rd Clutch # 146 2002-06)	1-2	22572-PPV-A01
50140AC	Pressure Plate, BZKA-5/GPPA-2/MCVA/MRVA/MZKA-1/MZKA-2 4th Clutch (.090”)(#1) (20 Teeth)(3.695”ID) 2002-06 (Also Fits BZKA-5/GPPA-2/MCVA/MRVA/MZKA-1/MZKA-2 3rd Clutch # 146 2002-06)	1-2	22573-PPV-A01

© Whatever It Takes Transmission Parts. Inc.

50140AD.....Pressure Plate, BZKA-5/GPPA-2/MCVA/MRVA/MZKA-1/MZKA-2 4th Clutch (.094")(#1) .....(20 Teeth)(3.695"ID) 2002-06 (Also Fits BZKA-5/GPPA-2/MCVA/MRVA/MZKA-1/MZKA-2 3rd .....Clutch # 146 2002-06).....1-2.....22574-PPV-A01

50140AE.....Pressure Plate, BZKA-5/GPPA-2/MCVA/MRVA/MZKA-1/MZKA-2 4th Clutch (.098")(#1) .....(20 Teeth)(3.695"ID) 2002-06 (Also Fits BZKA-5/GPPA-2/MCVA/MRVA/MZKA-1/MZKA-2 3rd .....Clutch # 146 2002-06).....1-2.....22575-PPV-A01

50140AF .....Pressure Plate, BZKA-5/GPPA-2/MCVA/MRVA/MZKA-1/MZKA-2 4th Clutch (.102")(#1) .....(20 Teeth)(3.695"ID) 2002-06 (Also Fits BZKA-5/GPPA-2/MCVA/MRVA/MZKA-1/MZKA-2 3rd .....Clutch # 146 2002-06).....1-2.....11576-PPV-A01

50140AG .....Pressure Plate, BZKA-5/GPPA-2/MCVA/MRVA/MZKA-1/MZKA-2 4th Clutch (.106")(#1) .....(20 Teeth)(3.695"ID) 2002-06 (Also Fits BZKA-5/GPPA-2/MCVA/MRVA/MZKA-1/MZKA-2 3rd .....Clutch # 146 2002-06).....1-2.....22577-PPV-A01

50140AH.....Pressure Plate, BZKA-5/GPPA-2/MCVA/MRVA/MZKA-1/MZKA-2 4th Clutch (.110")(#1) .....(20 Teeth)(3.695"ID) 2002-06 (Also Fits BZKA-5/GPPA-2/MCVA/MRVA/MZKA-1/MZKA-2 3rd .....Clutch # 146 2002-06).....1-2.....22578-PPV-A01

50140AJ .....Pressure Plate, BZKA-5/GPPA-2/MCVA/MRVA/MZKA-1/MZKA-2 4th Clutch (.114")(#1) .....(20 Teeth)(3.695"ID) 2002-06 (Also Fits BZKA-5/GPPA-2/MCVA/MRVA/MZKA-1/MZKA-2 3rd .....Clutch # 146 2002-06).....1-2.....22579-PPV-A01

50144AA.....Pressure Plate, BZKA-5/GPPA-2/MCVA/MRVA/MZKA-1/MZKA-2 2nd Clutch (.102")(#1) .....(24 Teeth)(3.675"ID) 2002-06.....1.....22571-PRP-003

50144AB.....Pressure Plate, BZKA-5/GPPA-2/MCVA/MRVA/MZKA-1/MZKA-2 2nd Clutch (.106")(#1) .....(24 Teeth)(3.675"ID) 2002-06.....1.....22572-PRP-003

50144AC.....Pressure Plate, BZKA-5/GPPA-2/MCVA/MRVA/MZKA-1/MZKA-2 2nd Clutch (.110")(#1) .....(24 Teeth)(3.675"ID) 2002-06.....1.....22573-PRP-003

50144AD.....Pressure Plate, BZKA-5/GPPA-2/MCVA/MRVA/MZKA-1/MZKA-2 2nd Clutch (.114")(#1) .....(24 Teeth)(3.675"ID) 2002-06.....1.....22574-PRP-003

50144AE.....Pressure Plate, BZKA-5/GPPA-2/MCVA/MRVA/MZKA-1/MZKA-2 2nd Clutch (.118")(#1) .....(24 Teeth)(3.675"ID) 2002-06.....1.....22575-PRP-003

50144AF .....Pressure Plate, BZKA-5/GPPA-2/MCVA/MRVA/MZKA-1/MZKA-2 2nd Clutch (.122")(#1) .....(24 Teeth)(3.675"ID) 2002-06.....1.....22576-PRP-003

50144AG .....Pressure Plate, BZKA-5/GPPA-2/MCVA/MRVA/MZKA-1/MZKA-2 2nd Clutch (.126")(#1) .....(24 Teeth)(3.675"ID) 2002-06.....1.....

50144AH.....Pressure Plate, BZKA-5/GPPA-2/MCVA/MRVA/MZKA-1/MZKA-2 2nd Clutch (.130")(#1) .....(24 Teeth)(3.675"ID) 2002-06.....1.....22578-PRP-003

50144AJ .....Pressure Plate, BZKA-5/GPPA-2/MCVA/MRVA/MZKA-1/MZKA-2 2nd Clutch (.134")(#1) .....(24 Teeth)(3.675"ID) 2002-06.....1.....22579-PRP-003

50146A .....Use 50140AA Thru AJ.....1.....

50148AA.....Pressure Plate, BZKA-5/GPPA-2/MCVA/MRVA/MZKA-1/MZKA-2 1st Clutch (.102")(#1) .....(24 Teeth)(3.675"ID) 2002-06.....1.....22551-RCL-003

50148AB.....Pressure Plate, BZKA-5/GPPA-2/MCVA/MRVA/MZKA-1/MZKA-2 1st Clutch (.106")(#1) .....(24 Teeth)(3.675"ID) 2002-06.....1.....22552-RCL-003

50148AC.....Pressure Plate, BZKA-5/GPPA-2/MCVA/MRVA/MZKA-1/MZKA-2 1st Clutch (.110")(#1) .....(24 Teeth)(3.675"ID) 2002-06.....1.....22553-RCL-003

50148AD.....Pressure Plate, BZKA-5/GPPA-2/MCVA/MRVA/MZKA-1/MZKA-2 1st Clutch (.114")(#1) .....(24 Teeth)(3.675"ID) 2002-06.....1.....22554-RCL-003

50148AE.....Pressure Plate, BZKA-5/GPPA-2/MCVA/MRVA/MZKA-1/MZKA-2 1st Clutch (.118")(#1) .....(24 Teeth)(3.675"ID) 2002-06.....1.....22555-RCL-003

50148AF .....Pressure Plate, BZKA-5/GPPA-2/MCVA/MRVA/MZKA-1/MZKA-2 1st Clutch (.122")(#1) .....(24 Teeth)(3.675"ID) 2002-06.....1.....22556-RCL-003

50148AG .....Pressure Plate, BZKA-5/GPPA-2/MCVA/MRVA/MZKA-1/MZKA-2 1st Clutch (.126")(#1) .....(24 Teeth)(3.675"ID) 2002-06.....1.....22557-RCL-003

50148AH.....Pressure Plate, BZKA-5/GPPA-2/MCVA/MRVA/MZKA-1/MZKA-2 1st Clutch (.130")(#1) .....(24 Teeth)(3.675"ID) 2002-06.....1.....22558-RCL-003

50148AJ .....Pressure Plate, BZKA-5/GPPA-2/MCVA/MRVA/MZKA-1/MZKA-2 1st Clutch (.134")(#1) .....(24 Teeth)(3.675"ID) 2002-06.....1.....22559-RCL-003

PART #	VALVE BODY KITS	QTY	REFERENCE #

S50165A.....Valve Body Kit, BZKA-5/BZKA-6/BZKA-7/MZKA-1/MZKA-2/MZKA-3/MZKA-4/MZKA-8 .....(Superior).....1.....

PART #	SEALING RINGS	QTY	REFERENCE #

50179AT .....Ring, BZKA-5/GPPA-2/MCVA/MRVA/MZKA-1/MZKA-2 Mainshaft (.077"Thick)(1.143"OD) .....(Teflon) 2002-05 (Also BZKA-5/GPPA-2/MCVA/MRVA/MZKA-1/MZKA-2 Secondary Shaft # 181 .....2002-05).....2.....22814-PRP-003

© Whatever It Takes Transmission Parts. Inc.

PART #	WASHERS & BEARINGS	QTY	REFERENCE #
30206A	Washer, BZKA-5/GPPA-2/MCVA/MRVA/MZKA-1/MZKA-2 # 206, 207, 208	1-3	23926-P24-J00
50207A	Use 30206A.	1	
50208A	Use 30206A.	1	
80209	Caged Bearing, BZKA-5/BZKA-6/BZKA-7/GPPA-2/MCVA/MRVA/MZKA-1/MZKA-2/MZKA-3/ MZKA-4/MZKA-8 (#209) Stator (Front)(1.040"OD)	1	
50211A	Ball Bearing, BZKA-5/GPPA-2/MCVA/MRVA/MZKA-1/MZKA-2 Bell To Converter Hub (.293"Thick) (2.675"OD)(1.575"ID)(Cast # DG406808-PRP) 2002-06	1	91001-PRP-004
50214A	Caged Needle Bearing, BZKA-5/GPPA-2/MCVA/MRVA/MZKA-1/MZKA-2 Mainshaft To Converter Reactor (.695"Thick)(1.115"OD) 2002-06	1	91017-PZK-003
50217A	Thrust Bearing, BZKA-5/GPPA-2/MCVA/MRVA/MZKA-1/MZKA-2 Mainshaft To 3rd Gear (2.790"OD)(2.270"ID) 2002-06		91026-PRP-003
	(Also Fits BZKA-5/GPPA-2/MCVA/MRVA/MZKA-1/MZKA-2 3rd Gear (Mainshaft) To 3rd/4th Drum # 223 2002-06)	1-2	
50220A	Caged Needle Bearing, BZKA-5/GPPA-2/MCVA/MRVA/MZKA-1/MZKA-2 3rd Gear (Inner) To Mainshaft (.697"Thick)(2.215"OD) 2002-06	1	91109-PRP-003
50223A	Use 50217A.	1	
50224AA	Washer, BZKA-5/GPPA-2/MCVA/MRVA/MZKA-1/MZKA-2 3rd Gear (Mainshaft) To 3rd/4th Drum (.175"Thick)(2.765"OD) 2002-06	1	90414-RCT-000
50224AB	Washer, BZKA-5/GPPA-2/MCVA/MRVA/MZKA-1/MZKA-2 3rd Gear (Mainshaft) To 3rd/4th Drum (.176"Thick)(2.765"OD) 2002-06	1	90415-RCT-000
50224AC	Washer, BZKA-5/GPPA-2/MCVA/MRVA/MZKA-1/MZKA-2 3rd Gear (Mainshaft) To 3rd/4th Drum (.177"Thick)(2.765"OD) 2002-06	1	90416-RCT-000
50224AD	Washer, BZKA-5/GPPA-2/MCVA/MRVA/MZKA-1/MZKA-2 3rd Gear (Mainshaft) To 3rd/4th Drum (.216"Thick)(2.765"OD) 2002-06	1	90418-RCT-000
50224AE	Washer, BZKA-5/GPPA-2/MCVA/MRVA/MZKA-1/MZKA-2 3rd Gear (Mainshaft) To 3rd/4th Drum (.219"Thick)(2.765"OD) 2002-06	1	90419-RCT-000
50224AF	Washer, BZKA-5/GPPA-2/MCVA/MRVA/MZKA-1/MZKA-2 3rd Gear (Mainshaft) To 3rd/4th Drum (.255"Thick)(2.765"OD) 2002-06	1	90417-PRP-010
50225A	Collar, BZKA-5/GPPA-2/MCVA/MRVA/MZKA-1/MZKA-2 3rd/4th Drum To 4th Gear (Mainshaft) (2.615"Long)(1.060"ID) 2002-06	1	90501-PRP-000
50226A	Use 30226B	1	
30226B	Bearing, BZKA-5/BZKA-6/BZKA-7/GPPA-2/MCVA/MRVA/MZKA-1/MZKA-2/MZKA-3/MZKA-4/ MZKA-8 (#226)(.097"Thick)(2.094"OD)	1	91023-P7Z-003
50229A	Caged Needle Bearing, BZKA-5/GPPA-2/MCVA/MRVA/MZKA-1/MZKA-2 4th/Reverse Gear To Mainshaft (1.535"Long)(1.545"OD) 2002-06	1	91107-PRP-003
50232A	Use 30232A.	1	
30232A	Bearing,BZKA-5/BZKA-6/BZKA-7/MCVA/MRVA/MZKA-1/MZKA-2 (#232) 2002-06 (.078"Thick) (1.800"OD)	1	91018-PW7-A02
40232A	Bearing, BZKA-5/GPPA-2/MCVA/MRVA/MZKA-1 1st Gear (Secondary Shaft) To 1st Clutch Drum # 243 2002-06 (.099"Thick)(2.065"OD)(1.580"ID)	1	91021-PRP-013
50235A	Ball Bearing, BZKA-5/GPPA-2/MCVA/MRVA/MZKA-1/MZKA-2 Mainshaft To Case (.607"Thick) (3.330"OD)(1.065"ID)(9 Balls)(Cast # 27BC08S3N) 2002-06	1	91002-RCR-016
50238A	Ball Bearing, BZKA-5/GPPA-2/MCVA/MRVA/MZKA-1/MZKA-2 Bell Housing To Secondary Shaft (Cast # TA-SX06C51NV1) 2002-06	1	91005-PRP-003
50241A	Caged Needle Bearing, BZKA-5/GPPA-2/MCVA/MRVA/MZKA-1/MZKA-2 1st Gear To Secondary Shaft (Inner)(1.125"Thick)(1.815"OD) 2002-06	1	91105-PRH-003
50242A	Thrust Bearing, BZKA-5/GPPA-2/MCVA/MRVA/MZKA-1/MZKA-2 Secondary Shaft To 1st Gear (.099"Thick)(2.338"OD)(1.842"ID) 2002-06 (Also Fits BZKA-5/GPPA-2/MCVA/MRVA/MZKA-1/ MZKA-2 # 250 & 253)	1-2	91022-PRP-003
50243A	Use 40232A.	1	
50244AA	Washer, BZKA-5/GPPA-2/MCVA/MRVA/MZKA-1/MZKA-2 1st Gear (Secondary Shaft) To 1st Drum (.189"Thick)(2.030"OD) 2002-06	1	90503-RCT-000
50244AB	Washer, BZKA-5/GPPA-2/MCVA/MRVA/MZKA-1/MZKA-2 1st Gear (Secondary Shaft) To 1st Drum (.191"Thick)(2.030"OD) 2002-06	1	90504-RCT-000
50244AC	Washer, BZKA-5/GPPA-2/MCVA/MRVA/MZKA-1/MZKA-2 1st Gear (Secondary Shaft) To 1st Drum (.193"Thick)(2.030"OD) 2002-06	1	90505-PRP-000
50244AD	Washer, BZKA-5/GPPA-2/MCVA/MRVA/MZKA-1/MZKA-2 1st Gear (Secondary Shaft) To 1st Drum (.195"Thick)(2.030"OD) 2002-06	1	90506-RCT-000
50244AE	Washer, BZKA-5/GPPA-2/MCVA/MRVA/MZKA-1/MZKA-2 1st Gear (Secondary Shaft) To 1st Drum (.197"Thick)(2.030"OD) 2002-06	1	90507-PRP-000
50244AF	Washer, BZKA-5/GPPA-2/MCVA/MRVA/MZKA-1/MZKA-2 1st Gear (Secondary Shaft) To 1st Drum (.199"Thick)(2.030"OD) 2002-06	1	90508-PRP-000
50245A	Collar, BZKA-5/GPPA-2/MCVA/MRVA/MZKA-1/MZKA-2 1st Clutch Drum To Idler Gear (1.732"Long) 2002-06	1	90443-PRH-000
50250A	Use 50242A.	1	
50251A	Caged Needle Bearing, BZKA/MCVA MRVA/MZKA 2nd Gear (Inner) To Secondary Shaft (.790"Thick)(1.783"OD) 2002-06	1	91106-PRP-025

© Whatever It Takes Transmission Parts. Inc.

50252AA.....Washer, BZKA-5/GPPA-2/MCVA/MRVA/MZKA-1/MZKA-2 2nd Drum To 2nd Gear (.153"Thick) .....(2.285"OD) 2002-06 .....1 .....90511-PRP-010
50252AB.....Washer, BZKA-5/GPPA-2/MCVA/MRVA/MZKA-1/MZKA-2 2nd Drum To 2nd Gear (.154"Thick) .....(2.285"OD) 2002-06 .....1 .....90512-PRP-010
50252AC.....Washer, BZKA-5/GPPA-2/MCVA/MRVA/MZKA-1/MZKA-2 2nd Drum To 2nd Gear (.155"Thick) .....(2.285"OD) 2002-06 .....1 .....90513-PRP-010
50252AD.....Washer, BZKA-5/GPPA-2/MCVA/MRVA/MZKA-1/MZKA-2 2nd Drum To 2nd Gear (.156"Thick) .....(2.285"OD) 2002-06 .....1 .....90514-PRP-010
50252AE.....Washer, BZKA-5/GPPA-2/MCVA/MRVA/MZKA-1/MZKA-2 2nd Drum To 2nd Gear (.157"Thick) .....(2.285"OD) 2002-06 .....1 .....90515-PRP-010
50252AF .....Washer, BZKA-5/GPPA-2/MCVA/MRVA/MZKA-1/MZKA-2 2nd Drum To 2nd Gear .....(.158"Thick)(2.285"OD) 2002-06 .....1 .....90516-PRP-010
50252AG .....Washer, BZKA-5/GPPA-2/MCVA/MRVA/MZKA-1/MZKA-2 2nd Drum To 2nd Gear .....(.159"Thick)(2.285"OD) 2002-06 .....1 .....90517-PRP-010
50252AH.....Washer, BZKA-5/GPPA-2/MCVA/MRVA/MZKA-1/MZKA-2 2nd Drum To 2nd Gear .....(.160"Thick)(2.285"OD) 2002-06 .....1 .....90518-PRP-010
50252AJ .....Washer, BZKA-5/GPPA-2/MCVA/MRVA/MZKA-1/MZKA-2 2nd Drum To 2nd Gear .....(.161"Thick)(2.285"OD) 2002-06 .....1 .....90519-PRP-010
50252AK.....Washer, BZKA-5/GPPA-2/MCVA/MRVA/MZKA-1/MZKA-2 2nd Drum To 2nd Gear .....(.162"Thick)(2.285"OD) 2002-06 .....1 .....90520-PRP-010
50252AL .....Washer, BZKA-5/GPPA-2/MCVA/MRVA/MZKA-1/MZKA-2 2nd Drum To 2nd Gear .....(.163"Thick)(2.285"OD) 2002-06 .....1 .....90521-PRP-010
50252AM .....Washer, BZKA-5/GPPA-2/MCVA/MRVA/MZKA-1/MZKA-2 2nd Drum To 2nd Gear .....(.164"Thick)(2.285"OD) 2002-06 .....1 .....90522-PRP-010
50252AN.....Washer, BZKA-5/GPPA-2/MCVA/MRVA/MZKA-1/MZKA-2 2nd Drum To 2nd Gear .....(.165"Thick)(2.285"OD) 2002-06 .....1 .....90523-RP-000
50252AP.....Washer, BZKA-5/GPPA-2/MCVA/MRVA/MZKA-1/MZKA-2 2nd Drum To 2nd Gear .....(.166"Thick)(2.285"OD) 2002-06 .....1 .....90524-PRP-000
50252AQ .....Washer, BZKA-5/GPPA-2/MCVA/MRVA/MZKA-1/MZKA-2 2nd Drum To 2nd Gear .....(.167"Thick)(2.285"OD) 2002-06 .....1 .....90525-PRP-000
50252AR.....Washer, BZKA-5/GPPA-2/MCVA/MRVA/MZKA-1/MZKA-2 2nd Drum To 2nd Gear .....(.168"Thick)(2.285"OD) 2002-06 .....1 .....90526-PRP-000
50252AS.....Washer, BZKA-5/GPPA-2/MCVA/MRVA/MZKA-1/MZKA-2 2nd Drum To 2nd Gear .....(.169"Thick)(2.285"OD) 2002-06 .....1 .....90527-PRP-000
50252AT .....Washer, BZKA-5/GPPA-2/MCVA/MRVA/MZKA-1/MZKA-2 2nd Drum To 2nd Gear .....(.170"Thick)(2.285"OD) 2002-06 .....1 .....90528-PRP-000
50252AU.....Washer, BZKA-5/GPPA-2/MCVA/MRVA/MZKA-1/MZKA-2 2nd Drum To 2nd Gear .....(.171"Thick)(2.285"OD) 2002-06 .....1 .....90529-PRP-000
50252AV .....Washer, BZKA-5/GPPA-2/MCVA/MRVA/MZKA-1/MZKA-2 2nd Drum To 2nd Gear .....(.172"Thick)(2.285"OD) 2002-06 .....1 .....90530-PRP-000
50253A .....Use 50242A.....1 .....
50254A .....Roller Bearing, BZKA-5/GPPA-2/MCVA/MRVA/MZKA-1/MZKA-2 Bell Housing To Countershaft .....(.710"Thick)(2.520"OD)(12 Rollers) 2002-06 .....1 .....91102-PZK-003
50267A .....Collar, BZKA-5/GPPA-2/MCVA/MRVA/MZKA-1/MZKA-2 3rd Gear (Countershaft)(3.260"Long) .....(1.610"OD)(1.455"ID) 2002-06 .....1 .....90441-PPV-000
50269A .....Collar, BZKA-5/GPPA-2/MCVA/MRVA/MZKA-1/MZKA-2 4th Gear (Countershaft)(.305"Thick) .....(1.845"OD)(1.380"ID) 2002-06 .....1 .....90445-PPV-000
50271A .....Use 30271A.....1 .....
50273A .....Caged Needle Bearing, BZKA-5/GPPA-2/MCVA/MRVA/MZKA-1/MZKA-2 Reverse Gear To .....Countershaft (Inner)(.560"Thick)(1.780"OD) 2002-06 .....1 .....91024-PRP-004
50274A .....Ball Bearing, BZKA-5/GPPA-2/MCVA/MRVA/MZKA-1/MZKA-2 Countershaft To Case .....(.630"Thick)(3.150"OD)(1.218"ID)(11 Balls)(Cast # HTF B31-10NX) 2002-06 .....1 .....91003-RFK-015
50283A .....Caged Needle Bearing, BZKA-5/GPPA-2/MCVA/MRVA/MZKA-1/MZKA-2 Reverse Idler Gear .....(Inner)(.615"Thick)(.750"OD) 2002-06 .....1 .....91025-POX-003
50286A .....Ball Bearing, BZKA-5/GPPA-2/MCVA/MRVA/MZKA-1/MZKA-2 Secondary Shaft To Case .....(.550"Thick)(2.165"OD)(1.052"ID)(9 Balls)(Cast # SX05B52NPX1V1) 2002-06.....1 .....91004-RCL-003
50288A .....Cup Race, BZKA-5/GPPA-2/MCVA/MRVA/MZKA-1/MZKA-2 Differential To Case (.540"Thick) .....(3.003"OD)(Cast # NTN ECO CR-08A78-1) 2002-06 .....1 .....
50289A .....Cone Bearing, BZKA-5/GPPA-2/MCVA/MRVA/MZKA-1/MZKA-2 Differential To Case (1.575"ID) .....(21 Roller)(Cast # NTN ECO CR-08A78-1 Or -2) 2002-06 .....1 .....
50290AA.....Shim, BZKA-5/GPPA-2/MCVA/MRVA/MZKA-1/MZKA-2 Differential Bearing To Case .....(.061"Thick)(2.980"OD)(2.680"ID) 2002-06.....1 .....41428-PRP-000
50290AB.....Shim, BZKA-5/GPPA-2/MCVA/MRVA/MZKA-1/MZKA-2 Differential Bearing To Case .....(.063"Thick)(2.980"OD)(2.680"ID) 2002-06.....1 .....41429-PRP-000
50290AC.....Shim, BZKA-5/GPPA-2/MCVA/MRVA/MZKA-1/MZKA-2 Differential Bearing To Case .....(.065"Thick)(2.980"OD)(2.680"ID) 2002-06.....1 .....41430-PRP-000
50290AD.....Shim, BZKA-5/GPPA-2/MCVA/MRVA/MZKA-1/MZKA-2 Differential Bearing To Case .....(.067"Thick)(2.980"OD)(2.680"ID) 2002-06.....1 .....41431-PRP-000
50290AE.....Shim, BZKA-5/GPPA-2/MCVA/MRVA/MZKA-1/MZKA-2 Differential Bearing To Case .....(.069"Thick)(2.980"OD)(2.680"ID) 2002-06.....1 .....41432-PRP-000

© Whatever It Takes Transmission Parts. Inc.

PART #	WASHERS & BEARINGS (Continued)	QTY	REFERENCE #
50290AF	Shim, BZKA-5/GPPA-2/MCVA/MRVA/MZKA-1/MZKA-2 Differential Bearing To Case (.071"Thick)(2.980"OD)(2.680"ID) 2002-06	1	41433-PRP-000
50290AG	Shim, BZKA-5/GPPA-2/MCVA/MRVA/MZKA-1/MZKA-2 Differential Bearing To Case (.073"Thick)(2.980"OD)(2.680"ID) 2002-06	1	41434-PRP-000
50290AH	Shim, BZKA-5/GPPA-2/MCVA/MRVA/MZKA-1/MZKA-2 Differential Bearing To Case (.075"Thick)(2.980"OD)(2.680"ID) 2002-06	1	41435-PRP-000
50290AJ	Shim, BZKA-5/GPPA-2/MCVA/MRVA/MZKA-1/MZKA-2 Differential Bearing To Case (.077"Thick)(2.980"OD)(2.680"ID) 2002-06	1	41436-PRP-000
50290AK	Shim, BZKA-5/GPPA-2/MCVA/MRVA/MZKA-1/MZKA-2 Differential Bearing To Case (.079"Thick)(2.980"OD)(2.680"ID) 2002-06	1	41437-PRP-000
50290AL	Shim, BZKA-5/GPPA-2/MCVA/MRVA/MZKA-1/MZKA-2 Differential Bearing To Case (.081"Thick)(2.980"OD)(2.680"ID) 2002-06	1	41438-PX4-700
50290AM	Shim, BZKA-5/GPPA-2/MCVA/MRVA/MZKA-1/MZKA-2 Differential Bearing To Case (.083"Thick)(2.980"OD)(2.680"ID) 2002-06	1	41439-PX4-700
50290AN	Shim, BZKA-5/GPPA-2/MCVA/MRVA/MZKA-1/MZKA-2 Differential Bearing To Case (.085"Thick)(2.980"OD)(2.680"ID) 2002-06	1	41440-PX4-700
50290AP	Shim, BZKA-5/GPPA-2/MCVA/MRVA/MZKA-1/MZKA-2 Differential Bearing To Case (.087"Thick)(2.980"OD)(2.680"ID) 2002-06	1	41441-PK4-000
50290AQ	Shim, BZKA-5/GPPA-2/MCVA/MRVA/MZKA-1/MZKA-2 Differential Bearing To Case (.089"Thick)(2.980"OD)(2.680"ID) 2002-06	1	41442-PK4-000
50290AR	Shim, BZKA-5/GPPA-2/MCVA/MRVA/MZKA-1/MZKA-2 Differential Bearing To Case (.091"Thick)(2.980"OD)(2.680"ID) 2002-06	1	41443-PK4-000
50290AS	Shim, BZKA-5/GPPA-2/MCVA/MRVA/MZKA-1/MZKA-2 Differential Bearing To Case (.093"Thick)(2.980"OD)(2.680"ID) 2002-06	1	41444-PK4-000
50290AT	Shim, BZKA-5/GPPA-2/MCVA/MRVA/MZKA-1/MZKA-2 Differential Bearing To Case (.095"Thick)(2.980"OD)(2.680"ID) 2002-06	1	41445-PK4-000
50290AU	Shim, BZKA-5/GPPA-2/MCVA/MRVA/MZKA-1/MZKA-2 Differential Bearing To Case (.097"Thick)(2.980"OD)(2.680"ID) 2002-06	1	41446-PK4-000
50290AV	Shim, BZKA-5/GPPA-2/MCVA/MRVA/MZKA-1/MZKA-2 Differential Bearing To Case (.099"Thick)(2.980"OD)(2.680"ID) 2002-06	1	41447-PK4-000
50290AW	Shim, BZKA-5/GPPA-2/MCVA/MRVA/MZKA-1/MZKA-2 Differential Bearing To Case (.101"Thick)(2.980"OD)(2.680"ID) 2002-06	1	41448-PK4-000
50290AX	Shim, BZKA-5/GPPA-2/MCVA/MRVA/MZKA-1/MZKA-2 Differential Bearing To Case (.103"Thick)(2.980"OD)(2.680"ID) 2002-06	1	41449-PK4-000
50290AY	Shim, BZKA-5/GPPA-2/MCVA/MRVA/MZKA-1/MZKA-2 Differential Bearing To Case (.105"Thick)(2.980"OD)(2.680"ID) 2002-06	1	41450-PK4-000
50290AZ	Shim, BZKA-5/GPPA-2/MCVA/MRVA/MZKA-1/MZKA-2 Differential Bearing To Case (.107"Thick)(2.980"OD)(2.680"ID) 2002-06	1	41451-PK4-000
50290AZA	Shim, BZKA-5/GPPA-2/MCVA/MRVA/MZKA-1/MZKA-2 Differential Bearing To Case (.109"Thick)(2.980"OD)(2.680"ID) 2002-06	1	41452-PK4-000
50290AZB	Shim, BZKA-5/GPPA-2/MCVA/MRVA/MZKA-1/MZKA-2 Differential Bearing To Case (.111"Thick)(2.980"OD)(2.680"ID) 2002-06	1	41453-PK4-000
50290AZC	Shim, BZKA-5/GPPA-2/MCVA/MRVA/MZKA-1/MZKA-2 Differential Bearing To Case (.113"Thick)(2.980"OD)(2.680"ID) 2002-06	1	41454-PK4-000
50290AZD	Shim, BZKA-5/GPPA-2/MCVA/MRVA/MZKA-1/MZKA-2 Differential Bearing To Case (.115"Thick)(2.980"OD)(2.680"ID) 2002-06	1	41455-PK4-000
50290AZE	Shim, BZKA-5/GPPA-2/MCVA/MRVA/MZKA-1/MZKA-2 Differential Bearing To Case (.117"Thick)(2.980"OD)(2.680"ID) 2002-06	1	41456-PK4-000
50290AZF	Shim, BZKA-5/GPPA-2/MCVA/MRVA/MZKA-1/MZKA-2 Differential Bearing To Case (.119"Thick)(2.980"OD)(2.680"ID) 2002-06	1	41457-PK4-000
50290AZG	Shim, BZKA-5/GPPA-2/MCVA/MRVA/MZKA-1/MZKA-2 Differential Bearing To Case (.121"Thick)(2.980"OD)(2.680"ID) 2002-06	1	41458-PK4-000
50291A	Use 30292BK	1	
50292A	Use 30292BK	1	
30292BK	Cone Bearing W/Cup Race, BZKA-5/GPPA-2/MCVA MRVA/MZKA-2 (# 291 & #292) (20 Roller Bearing, 1.575"ID, 3.150" OD Cup Race) (Bearing Cast # ET-CR-0834ST Or ETA-CR-08A71ST)(Race Cast # ET-CR-08A32ST Or ET-CR-09A14ST Or ETA-CR-08A71ST)	1	08A71ST
40298A	Ball Bearing, BZKA-5/GPPA-2/MCVA/MRVA/MZKA-1/MZKA-2 (#298) (.235"Thick)(.945"OD) (.472"ID)(Cast # NSK6901)	1	91010-RJF-005
50299-1A	Double Ball Bearing, BZKA/MCVA/MRVA/MZKA Idler Shaft To Case (.943"Thick)(1.890"OD) (.785"ID)(Cast # 20BG04S6N) 2002-06	1	91006-PRP-026
50299A	Roller Bearing, BZKA-5/GPPA-2/MCVA/MRVA/MZKA-1/MZKA-2 Idler Gear To Idler Shaft (.727"Thick)(2.165"OD)(11 Rollers)(Cast # HL-BE-NK 32X55X18.5PX1) 2002-06	1	91103-RCL-023

© Whatever It Takes Transmission Parts. Inc.

PART #	ELECTRICAL COMPONENTS	QTY	REFERENCE #
50410A	Neutral Safety Switch, BZKA-5/GPPA-2/MCVA/MRVA/MZKA-1/MZKA-2 (10 Blade Rectangle Connector) 2002-06	1	28900-PPV-013
20411D	Switch, BZKA-5/BZKA-6/BZKA-7/BZKA-8/MCVA/MRVA/MZKA-1/MZKA-2/MZKA-3/MZKA-4 Pressure (Screws In The Case)(Grey, Black Or Beige Square Connector) 2002-06	1	28600-RCL-004
160411A	Switch, BZKA-5/ZKA-5/BZKA-7/BZKA-8/MCVA/MRVA/MZKA-1/MZKA-2/MZKA-3/MZKA-4 #412 Green Connector On Bell Housing (1.645" Long)	1	
40411B	Switch, BZKA-8 Pressure (3rd Clutch)(Tan, Black, Or White 1 Prong Connector)	1	
50412A	Use 30411C	1	
30411C	Switch, BZKA/MCVA/MRVA/MZKA (#412) Screws Into Rear Of Bell Housing 2002-06	1	
50421A	Solenoid, BZKA-5/GPPA-2/MCVA/MRVA/MZKA-1/MZKA-2 Shift "A"(Internal)(W/Brown Cap) (3.130" Long) 2002-06 (Also Fits BZKA-5/GPPA-2/MCVA/MRVA/MZKA-1/MZKA-2 (# 423) 2002-06	1-2	28400-PRP-004
50422A	Solenoid, BZKA-5/GPPA-2/MCVA/MRVA/MZKA-1/MZKA-2 Shift "B"(Internal)(W/Black Cap) (3.468" Long) 2002-06 (Also Fits BZKA-5/GPPA-2/MCVA/MRVA/MZKA-1/MZKA-2 (# 427) 2002-06	1-2	28500-PRP-004
50423A	Use 50421A	1	
50425A	Solenoid, BZKA-5/GPPA-2/MCVA/MRVA/MZKA-1/MZKA-2 Linear (Single W/4 Bolt Aluminum Housing) 2002-04	1	28250-PRP-013
50427A	Use 50422A	1	
50431A	Solenoid W/Housing, BZKA-5/GPPA-2/MCVA/MRVA/MZKA-1/MZKA-2 Linear "B" (2 Solenoids With Aluminum Housing)(Bolts On Side Of Case) 2002-06 (Also Fits BCLA/BZHA/BZKA-1/ BZNA/B90A/GPLA/GPPA-3/MCLA/MCTA/MKYA/MKZA/MM7A/MNZA/MRMA/MZHA/MZJA #431 2002-11)	1	
50436A	Sensor, BZKA-5/GPPA-2/MCVA/MRVA/MZKA-1/MZKA-2 (On The Side, Rear Of Case) (1.985" Long, W/.700"OD Plastic Tip) 2002-07 (Also Fits GPPA-3/GPPA-4/MKZA/BCLA/MKYA/ GPLA/MRMA)	1	28820-PPW-013
20436D	Sensor, BZKA-5/GPPA-2/MCVA/MRVA/MZKA-1/MZKA-2 (#438)(3 Prong)(.750"OD Chrome Tip) 2002-06	1	28810-PPW-013
50438A	Use 20436D	1	
20436D	Sensor, BZKA/MCVA/MRVA/MZKA #438 2002-06	1	
50444A	Case Connector, BZKA-5/GPPA-2/MCVA/MRVA/MZKA-1/MZKA-2 W/Temperature Sensor & 4 Solenoid Connectors (7 Pin, 10 Hole Rectangle Case Connector) 2002-06	1	28360-PRH-003
50445A	Wire Harness, BZKA-5/GPPA-2/MCVA/MRVA/MZKA-1/MZKA-2 (10 7/8"Long)(10 Wire) 2002-06	1	28950-PRP-010

PART #	MISCELLANEOUS COMPONENTS	QTY	REFERENCE #
50489A	Cover, BZKA-5/GPPA-2/MCVA/MRVA/MZKA-1/MZKA-2 Neutral Safety Switch (Black, Tin) 2002-06	1	21720-RCT-010
30492A	Drain Plug, BZKA-5/BZKA-6/BZKA-7/GPPA-2/MCVA/MRVA/MKZA-1/MZKA-2/MZKA-3/ MZKA-4/MZKA-8	1	90081-PX4-003
50493A	Dip Stick, BZKA-5/GPPA-2/MCVA/MRVA/MZKA-1/MZKA-2 (12" Long)(Goes Into Top Rear Of Case) 2002-06	1	25610-PPW-023
50529A	Tube, BZKA-5/GPPA-2/MCVA/MRVA/MZKA-1/MZKA-2 Stator (3.910"Long Shaft) 2002-06	1	25155-PRP-000
50529-1A	Dowel Pin, BZKA-5/GPPA-2/MCVA/MRVA/MZKA-1/MZKA-2 Stator Tube Stop (.313"OD) (3.145"Long) 2002-06	1	90701-PK4-000

PART #	HARDPARTS	QTY	REFERENCE #
60530C	Pump Gears, BZKA-5/BZKA-6/BZKA-7/GPPA-2/MCVA/MRVA/MKZA-1/MZKA-2/MZKA-3/ MZKA-4/MZKA-8 (38 Spline Gear)(28 Teeth)(.470" Thick)	1	
50535A	Use 80535	1	
80535	Pin, BZKA-5/BZKA-6/BZKA-7/GPPA-2/MCVA/MRVA/MKZA-1/MZKA-2/MZKA-3/MZKA-4/ MZKA-8 (#535) 2002-06	1	
50550A	Drum, BZKA-5/GPPA-2/MCVA/MRVA/MZKA-1/MZKA-2 3rd/4th Drum (2.780"Thick) 2002-06	1	22651-PRP-003
50552A	Drum, BZKA-5/GPPA-2/MCVA/MRVA/MZKA-1/MZKA-2 2nd Clutch (Uses 24 Teeth Steels) (5.155"OD) 2002-06	1	22610-PPV-A03
50554A	Drum, BZKA-5/GPPA-2/MCVA/MRVA/MZKA-1/MZKA-2 1st Clutch (Uses 24 Teeth Steels) (5.203"OD) 2002-06	1	22510-PPV-A02
50672A	Mainshaft, BZKA-5/GPPA-2/MCVA/MRVA/MZKA-1/MZKA-2 (14 3/8"Long)(2.750"OD Flange) 2002-06	1	23210-PPV-000
50675A	Secondary Shaft, BZKA/MCVA/MRVA/MZKA (12 1/16"Long)(4 O-Rings)(.148"Thick Flange) 2002-06	1	23230-PRH-020
50676A	Countershaft, BZKA-5/MCVA (Some)/MRVA/MZKA-1/MZKA-2 (16 Teeth, 2 Groove)(11 5/8"Long) 2002-06	1	23221-PPV-A03
50676B	Countershaft, GPPA-2/MCVA (Some)(16 Teeth, 1 Groove)(11 5/8"Long) 2002-04	1	
50679A	Shaft, BZKA-5/GPPA-2/MCVA/MRVA/MZKA-1/MZKA-2 Idler (3.400"Long)(.152"Thick Flange) 2002-06	1	23516-RCL-010

© Whatever It Takes Transmission Parts. Inc.

PART #	HARDPARTS (Continued)	QTY	REFERENCE #
50689A	Oil Guide, BZKA-5/GPPA-2/MCVA/MRVA/MZKA-1/MZKA-2 Bell Housing To Countershaft (Tin) (.026"Thick)(2.510"OD) 2002-06	1	23225-PRP-020
50690A	Parking Gear, BZKA-5/GPPA-2/MCVA/MRVA/MZKA-1/MZKA-2 (15 Lugs)(4.405"OD) 2002-06	1	23427-PRP-000
50694A	Retainer, BZKA-5/GPPA-2/MCVA/MRVA/MZKA-1/MZKA-2 Holds Horse Shoe Clips To Idler Shaft (.101"Thick)(1.060"OD)(.789"ID) 2002-06	1	90432-PRP-000
50695A	Oil Baffle, BZKA-5/GPPA-2/MCVA/MRVA/MZKA-1/MZKA-2 Differential Housing To Bell Housing (.040"Thick)(3.140"OD)(1.612"ID)(W/1 Large Tab) 2002-06	1	41381-PRP-010
50697A	Oil Guide Collar, BZKA-5/GPPA-2/MCVA/MRVA/MZKA-1/MZKA-2 In Bell Housing Under Bearing # 238 (Aluminum)(.850"Thick)(1.140"ID)(W/2 Ears)(Uses 2 O-Rings) 2002-06	1	23235-PRP-000
50697A	Oil Guide Collar, BZKA-5/GPPA-2/MCVA/MRVA/MZKA-1/MZKA-2 In Bell Housing Under Bearing # 238 (Aluminum)(.850"Thick)(1.140"ID)(W/2 Ears)(Uses 2 O-Rings) 2002-06	1	23235-PRP-000
50698A	Spacer, BZKA-5/GPPA-2/MCVA/MRVA/MZKA-1/MZKA-2 Differential To Case (.040"Thick) (2.995"OD)(1.620"ID)(1 Tab) 2002-06	1	41382-PRP-010
50707A	Transfer Gear, MRVA/MZKA-1/MZKA-2 Drive (69 Teeth, No Groove)(1.180"Thick)(10 Bolt) 2002-06	1	29011-PRV-010
50710A	Gear, BZKA-5/MZKA-1/MZKA-2 Idler (Mainshaft)(39 Teeth, 2 Groove) 2003-06	1	
50710BA	Gear, GPPA-2/MCVA/MRVA Idler (Mainshaft)(39 Teeth, 1 Groove) 2002-04	1	23511-RCL-010
50712A	Gear, BZKA-5/GPPA-2/MCVA/MRVA/MZKA-1/MZKA-2 Idler (Secondary Shaft) (39 Teeth, 1 Groove)(1.045"Thick)(3.365"OD) 2002-06	1	23521-PRH-000
50714A	Idler Gear, BZKA-5/GPPA-2/MCVA/MRVA/MZKA-1/MZKA-2 (34 Teeth/44 Teeth)(2.305"Thick) (1.415"ID) 2002-06	1	23515-PRP-020
50715A	Differential Assembly, BZKA/MCVA (71 Teeth, 2 Groove Ring Gear) 2002-06	1	
50715AA	Differential Assembly, MRVA/MZKA (71 Teeth, 4 Groove Ring Gear)(W/69 Teeth Drive Transfer Gear) 2002-06	1	
50716A	Differential Housing, BZKA-5/BZKA-6/MCVA (W/10 Threaded Bolt Holes)(.430"Thick Bolt Flange) 2002-06	1	41100-RCL-J05
50716AA	Differential Housing, GPPA-2/MRVA/MZKA-1/MZKA-2 (W/10 Unthreaded Bolt Holes) (.400"Thick Bolt Flange) 2002-06	1	41100-PZN-020
50720A	Differential Ring Gear, BZKA-5/MCVA (71 Teeth, 4 Groove) 2002-06	1	41233-RCL-010
50720AA	Differential Ring Gear, GPPA-2/MRVA/MZKA-1/MZKA-2 (71 Teeth, 2 Grooves In Center) 2002-06	1	41233-PZN-000
50740A	Valve Body, BZKA-5/GPPA-2/MCVA/MRVA/MZKA-1/MZKA-2 (Less Gears)(Cast # PRP) 2002-06	1	27000-RXH-000

PART #	VALVE BODY PARTS	QTY	REFERENCE #
80741ELK	Lube Kit,BZKA-5/BZKA-6/BZKA-7/GPPA-2/MCVA/MRVA/MKZA-1/MZKA-2/MZKA-3/MZKA-4/ MZKA-8 (Corrects Overheating Converter)(Fixes Up To 6 Transmissions)		

PART #	HARDPARTS (CONTINUED)	QTY	REFERENCE #
50747A	Plate, BZKA-5/GPPA-2/MCVA/MRVA/MZKA-1/MZKA-2 Valve Body 2002-06	1	27112-PRH-010
50750A	Bell Housing, BZKA-5 (2wd)(19 Bolts To Case)(8 3/4" Top Bolts)(Cast # PRP-1)(2.4 L) 2003-06	1	21111-PZK-305
50750AB	Bell Housing, GPPA-2/MRVA/MZKA-1/MZKA-2 (2wd)(19 Bolts To Case)(8 3/4" Top Bolts) (Cast # PRH-3 Or PRH-4)(2.4 L) 2002-06	1	21111-PRV-305
50750B	Bell Housing, MCVA (2wd)(19 Bolts To Case)(8 3/4" Top Bolts)(Cast # PZK-1)(2.4 L) 2002-04	1	21111-PRM-305
50757A	Solenoid Cover, BZKA/MCVA/MRVA/MZKA (Aluminum, 9 Bolt) 2002-06	1	28450-PRP-000
50759A	Rear Cover, BZKA-5/GPPA-2/MCVA/MRVA/MZKA-1/MZKA-2 (16 Bolt)(Cast # PRH) 2002-06	1	21240-PRH-020
50760A	Case, BZKA-5 (2wd)(19 Bolts To Bell)(Cast # PZK-1) 2003-06	1	21210-PZK-000
50760AA	Case, MZKA-1/MZKA-2 (AWD)(20 Bolts To Bell)(Cast # PRH) 2003-04	1	21210-PRW-900
50760B	Case, MCVA (2wd)(19 Bolts To Bell)(Cast # PRP-3) 2002-04	1	21210-PRP-020
50760BA	Case, GPPA-2/MRVA (AWD)(20 Bolts To Bell)(Cast # PRH) 2002-04	1	21210-PRH-020
50776AK	Bolt Set, BZKA-5/GPPA-2/MCVA Bell Houisng To Case (19 Pieces) 2002-06	1	
50776BK	Bolt Set, MRVA/MZKA Bell Housing To Case (20 Pieces) 2002-06	1	
50780AK	Bolt Set, BZKA-5/GPPA-2/MCVA/MRVA/MZKA-1/MZKA-2 Rear Cover To Case (16 Pieces) 2002-06	1	
50786AAK	Bolt Set, GPPA-2/MRVA/MZKA-1/MZKA-2 Differential Ring Gear/Transfer Gear (1.475"Long) (10 Pieces) 2002-06	1	90017-PET-000
50786AK	Bolt Set, BZKA-5/MCVA Differential Ring Gear (1.030"Long)(10 Pieces) 2002-06	1	90003-PA9-003
50795A	Use 80796	1	90203-PX4-010
50796A	Use 40796A	1	
40796A	Nut, BZKA-5/GPPA-2/MCVA/MRVA/MZKA-1/MZKA-2 (#796 & #797)(Left Hand Thread) (.515" Thick)	1	
80796	Nut, BZKA-5/GPPA-2/MCVA/MRVA/MZKA-1/MZKA-2 (#795)	1	90203-PX4-010
50797A	Use 40796A	1	
50801A	Gear, BZKA-5/GPPA-2/MCVA/MRVA/MZKA-1/MZKA-2 1st (Countershaft)(56 Teeth, 1 Very Light Groove)(5.600"OD) 2002-06	1	23421-PPV-010

© Whatever It Takes Transmission Parts. Inc.

50802A ..... Gear, BZKA-5/GPPA-2/MCVA MRVA/MZKA-1/MZKA-2 1st (Secondary Shaft) ..... (27 Teeth, No Groove)(2.595"Thick) 2002-06 ..... 1 ..... 23411-PRH-010
50803A ..... Gear, BZKA-5/GPPA-2/MCVA/MRVA/MZKA-1/MZKA-2 2nd (Secondary Shaft) ..... (43 Teeth, 2 Groove)(1.983"Thick) 2002-06 ..... 1 ..... 23431-PPV-020
50804A ..... Gear, BZKA-5/GPPA-2/MCVA/MRVA/MZKA-1/MZKA-2 2nd (Countershaft) ..... (51 Teeth, 1 Groove)(4.520"OD) 2002-06 ..... 1 ..... 23441-PPV-000
50806A ..... Gear, BZKA-5/MZKA-1/MZKA-2 3rd (Mainshaft)(37 Teeth, 3 Groove)(3.620"OD) 2003-06 ..... 1 ..... 23455-PZK-000
50806B ..... Gear, GPPA-2/MCVA/MRVA 3rd (Mainshaft) (39 Teeth, 2 Groove)(3.740"OD) 2002-04 ..... 1 ..... 23455-PPV-A01
50807A ..... Gear, BZKA-5/MZKA-1/MZKA-2 3rd (Countershaft)(40 Teeth, 1 Groove)(3.890"OD) 2003-06 ..... 1 ..... 23451-PRH-000
50807B ..... Gear, GPPA-2/MCVA/MRVA 3rd (Countershaft) (38 Teeth, 2 Groove)(3.765"OD) 2002-04 ..... 1 ..... 23451-PPV-A00
50809A ..... Gear, BZKA-5/MZKA-1/MZKA-2 4th/Reverse (Mainshaft)(45 Teeth, 2 Groove on 4th Gear) ..... (22 Teeth, No Groove On Reverse Gear) 2003-06 ..... 1 ..... 23461-PZK-000
50809B ..... Gear, GPPA-2/MCVA/MRVA 4th/Reverse (Mainshaft)(45 Teeth, 3 Groove On 4th Gear) ..... (22 Teeth, No Groove On Reverse) 2002-04 ..... 1 ..... 23461-PPV-A01
50810A ..... Gear, BZKA/MZKA 4th (Countershaft)(33 Teeth, No Groove)(3.230"OD) 2003-06 ..... 1 ..... 23741-PZK-000
50810B ..... Gear, GPPA-2/MCVA/MRVA 4th (Countershaft) (30 Teeth, 1 Groove) 2002-04 ..... 1 ..... 23741-PPV-A00
50816A ..... Gear, BZKA-5/GPPA-2/MCVA/MRVA/MZKA-1/MZKA-2 Reverse (Countershaft)(44 Teeth) ..... (4.485"OD)(1.805"ID) 2002-06 ..... 1 ..... 23531-PRP-010
50818A ..... Gear, BZKA-5/GPPA-2/MCVA/MRVA/MZKA-1/MZKA-2 Reverse Idler (26 Teeth, No Groove) ..... (.610"Thick)(2.810"OD)(.786"ID) 2002-06 ..... 1 ..... 23541-PRP-000
50820A ..... Bracket, BZKA-5/GPPA-2/MCVA/MRVA/MZKA-1/MZKA-2 Reverse Idler (1 Bolt, Aluminum) ..... (W/Shaft) 2002-06 ..... 1 ..... 21215-PRP-000
50830A ..... Selector, BZKA-5/GPPA-2/MCVA/MRVA/MZKA-1/MZKA-2 Reverse (.648"Thick) 2002-06 ..... 1 ..... 23565-PRP-010
50835A ..... Hub, BZKA-5/GPPA-2/MCVA/MRVA/MZKA-1/MZKA-2 Reverse Selector (26 Outer Teeth) ..... (1.008"Thick) 2002-06 ..... 1 ..... 23566-PRP-000
50840A ..... Fork, BZKA-5/GPPA-2/MCVA/MRVA/MZKA-1/MZKA-2 Reverse (2.455"ID At Forks) 2002-06 ..... 1 ..... 24111-PRP-000
50850A ..... Cushion, BZKA-5/GPPA-2/MCVA/MRVA/MZKA-1/MZKA-2 4th Clutch Wave Spring (.071"Thick) ..... (4.605"OD) 2002-06 (Also Fits BZKA-5/GPPA-2/MCVA/MRVA/MZKA-1/MZKA-2 # 853 & # 858 ..... 2002-06) ..... 1-2 ..... 22536-PRP-013
50852A ..... Cushion, BZKA-5/GPPA-2/MCVA/MRVA/MZKA-1/MZKA-2 2nd Clutch Wave Spring (.071"Thick) ..... (4.605"OD) 2002-06 ..... 1 ..... 22537-PRP-003
50853A ..... Use 50850A ..... 1 .....
50858A ..... Use 50850A ..... 1 .....
50861A ..... Snap Ring, BZKA-5/GPPA-2/MCVA/MRVA/MZKA-1/MZKA-2 Holds 4th Clutch Pressure Plate In ..... Drum (.070"Thick)(5.230"OD) 2002-06 (Also Fits BZKA-5/GPPA-2/MCVA/MRVA/MZKA-1/ ..... MZKA-2 # 878) ..... 1-2 ..... 90605-P7T-003
80870 ..... Snap Ring, BZKA-5/BZKA-6/BZKA-7/GPPA-2/MCVA/MRVA/MKZA-1/MZKA-2/MZKA-3/MZKA-4/ ..... MZKA-8 (# 870) ..... 1 .....
50871A ..... Use 80862 ..... 1-2 .....
80862 ..... Snap Ring, BZKA-5/BZKA-6/BZKA-7/GPPA-2/MCVA/MRVA/MKZA-1/MZKA-2/MZKA-3/MZKA-4/ ..... MZKA-8 (#863 & #871) ..... 1-2 ..... 90603-PX4-000
50873A ..... Use 80861 ..... 1 .....
80861 ..... Snap Ring, BZKA-5/BZKA-6/BZKA-7/GPPA-2/MCVA/MRVA/MKZA-1/MZKA-2/MZKA-3/MZKA-4/ ..... MZKA-8 (#876 & #873)(.069"Thick)(5.070"OD) ..... 1-2 ..... 90605-PX4-000
50874A ..... Use 20862F ..... 1 .....
50876A ..... Use 80861 ..... 1 .....
50877A ..... Use 20862F ..... 1 .....
20862F ..... Snap Ring, BZKA-5/GPPA-2/MCVA/MRVA/MZKA-1/MZKA-2 1st & 2nd Clutch Retainer In # 877 ..... & # 874 (.070"Thick)(1.945"OD) ..... 1-2 ..... 90603-P6H-003
50878A ..... Use 50861A ..... 1 .....
60879C ..... Snap Ring, BZKA-5/BZKA-6/BZKA-7/GPPA-2/MCVA/MRVA/MKZA-1/MZKA-2/MZKA-3/MZKA-4/ ..... MZKA-8 Holds Caged Bearing To Mainshaft ..... 1 ..... 90603-P0X-000
40880A ..... Snap Ring, BZKA-5/GPPA-2/MCVA/MRVA/MZKA-1/MZKA-2 (# 880)(.077"Thick)(3.355"OD) ..... 2002-06 ..... 1 ..... 90615-POZ-000
50881A ..... Snap Ring, BZKA-5/GPPA-2/MCVA/MRVA/MZKA-1/MZKA-2 Holds 2nd Clutch Drum To ..... Secondary Shaft (.078"Thick)(1.405"OD) 2002-06 ..... 1 ..... 90621-PRP-000
50886A ..... Use 30886A ..... 1 .....
30886A ..... Snap Ring, BZKA-5/GPPA-2/MCVA/MRVA/MZKA-1/MZKA-2 (# 886) Holds Collar To ..... Countershaft (.040"Thick) ..... 1 ..... 90614-PX4-700
50887B ..... Use 30887B ..... 1 .....
30887B ..... Horse Shoe Clips, BZKA-5/GPPA-2/MCVA/MRVA/MZKA-1/MZKA-2 (# 887) Countershaft ..... (.078"Thick)(1.699"Long)(.187"Wide)(2 Per Pack) ..... 1 ..... 90431-P6H-000
50889A ..... Snap Ring, BZKA-5/GPPA-2/MCVA/MRVA/MZKA-1/MZKA-2 Holds Bearing # 286 To Case ..... (.078"Thick)(2.285"OD)(W/Bent Ends) 2002-06 ..... 1 ..... 90614-PRP-000
50890A ..... Snap Ring, BZKA-5/GPPA-2/MCVA/MRVA/MZKA-1/MZKA-2 Holds Bearing # 274 To Case ..... (.077"Thick)(3.285"OD)(W/Bent Ends) 2002-06 ..... 1 ..... 90609-PX4-000
50895A ..... Snap Ring, BZKA-5/GPPA-2/MCVA/MRVA/MZKA-1/MZKA-2 Holds Idler Gear # 714 To Idler ..... Shaft (.070"Thick)(1.540"OD)(W/2 Eyelets) 2002-06 ..... 1 94510-36000
50897A ..... Horse Shoe Clips, BZKA-5/GPPA-2/MCVA/MRVA/MZKA-1/MZKA-2 Idler Shaft (.056"Thick) ..... (.970"Long)(2 Per Pack) 2002-06 ..... 1 ..... 90431-PRP-000

© Whatever It Takes Transmission Parts. Inc.

PART #	HARDPARTS (CONTINUED)	QTY	REFERENCE #
50898A	Snap Ring, BZKA-5/GPPA-2/MCVA/MRVA/MZKA-1/MZKA-2 Holds Idler Shaft Bearing To Case (.077"Thick)(1.970"OD)(W/Bent Ends) 2002-06	1	90613-PRP-000
50899A	Snap Ring, BZKA-5/GPPA-2/MCVA/MRVA/MZKA-1/MZKA-2 Holds Retainer To Idler Shaft (.047"Thick)(.880"OD)(W/2 Eyelets) 2002-06	1	94510-20000
50900A	Accumulator, BZKA-5/GPPA-2/MCVA/MRVA/MZKA-1/MZKA-2 W/Pistons (Cast # PRH) 2002-06	1	27405-PZK-010
50924A	Regulator Body, BZKA-5/GPPA-2/MCVA/MRVA/MZKA-1/MZKA-2 (Cast # PPW Or PRH) (Less Plate) 2002-06	1	27200-PPW-000
50960A	Piston, BZKA-5/GPPA-2/MCVA/MRVA/MZKA-1/MZKA-2 4th Clutch (.443"Thick)(4.710"OD) (1.860"ID) 2002-06 (Also Fits BZKA-5/GPPA-2 MCVA/MRVA/MZKA-1/MZKA-2 3rd Clutch # 965 2002-06)	1-2	22680-RCL-003
50962A	Piston, BZKA-5/GPPA-2/MCVA/MRVA/MZKA-1/MZKA-2 2nd Clutch (.550"Thick)(4.710"OD) 2002-06	1	22721-PRP-003
50965A	Use 50960A	1	
50967A	Piston, BZKA-5/GPPA-2/MCVA/MRVA/MZKA-1/MZKA-2 1st Clutch (.550"Thick)(4.710"OD) 2002-06	1	22521-RCL-003
50970A	Use 80970	1	
80970	Spring, BZKA-5/BZKA-6/BZKA-7/GPPA-2/MCVA/MRVA/MKZA-1/MZKA-2/MZKA-3/MZKA-4/ MZKA-8 (#970 & #975)(1.320"Tall Coil Height) 2002-06	1-2	22541-PX4-004
50972A	Use 50977A	1	
50975A	Use 80970	1	
50977A	Spring, BZKA-5/GPPA-2/MCVA/MRVA/MZKA-1/MZKA-2 1st Clutch Return (.275"Thick Wire) (2.550"OD) 2002-06 (Also Fits BZKA-5/GPPA-2/MCVA/MRVA/MZKA-1/MZKA-2 # 972)	1-2	22541-PRP-003
50980A	Use 80980	1	
80980	Retainer, BZKA-5/BZKA-6/BZKA-7/GPPA-2/MCVA/MRVA/MKZA-1/MZKA-2/MZKA-3/MZKA-4/ MZKA-8 3rd Clutch # 985 & 4th Clutch # 980)	1-2	22533-PX4-010
50982A	Use 160987A	1	
160987A	Retainer/Piston, BZKA-5/GPPA-2/MCVA/MRVA/MZKA-1/MZKA-2 (# 982 & # 987)(Bonded) (.930"Thick Through Center)(4.190"OD) 2002-06	1-2	22533-PRP-003
50985A	Use 80980	1	
50987A	Use 160987A	1	
50991-4A	Shift Rod, BZKA-5/GPPA-2/MCVA/MRVA/MZKA-1/MZKA-2 (18 3/4"Long) 2002-06	1	24410-PPV-000
50995A	Park Pawl Assembly, BZKA-5/GPPA-2/MCVA/MRVA/MZKA-1/MZKA-2 (2 Pieces) 2002-06	1	
80996	Fitting, BZKA-5/GPPA-2/MCVA/MRVA/MZKA-1/MZKA-2 # 982 & # 987)(Cooler Line Fitting) (1 1/2" Long)(Holds Cooler Line To Bell)	1	25951-639-000
50999-3A	Tube Set, BZKA-5/GPPA-2/MCVA/MRVA/MZKA-1/MZKA-2 In Rear Cover (2 Tubes) 2002-06	1	
50999-4A	Tube, BZKA-5/GPPA-2/MCVA/MRMA/MZKA-1/MZKA-2 Solenoid Housing To Regulator Body (No Screen)(1.375"Long)(1 Per Transmission) 2002-06	1	22749-PW4-000
50999-5A	Tube, BZKA-5/GPPA-2/MCVA/MRVA/MZKA-1/MZKA-2 Solenoid Housing To Regulator Body (Screened)(1.400"Long) 2002-06	1	22760-PPW-000
50999A	Tube Set, BZKA-5/GPPA-2/MCVA/MRVA/MZKA-1/MZKA-2 Regulator Body & Accumulator To Bell Housing & Case (6 Pieces) 2002-06	1	
50999AAK	Updated Tube Set, BZKA/MCVA/MRVA/MZKA Regulator Body To Bell Housing (Contains: 2 Bent Tubes With Welded On Bolt Brackets & 1 Bolt) 2002-06 (Also Fits BCLA/GPLA/GPPA-3/MCTA/ MKYA/MRMA)	1	

© Whatever It Takes Transmission Parts. Inc.

Pure Genius

Alto Revolutionizes Honda Friction Material

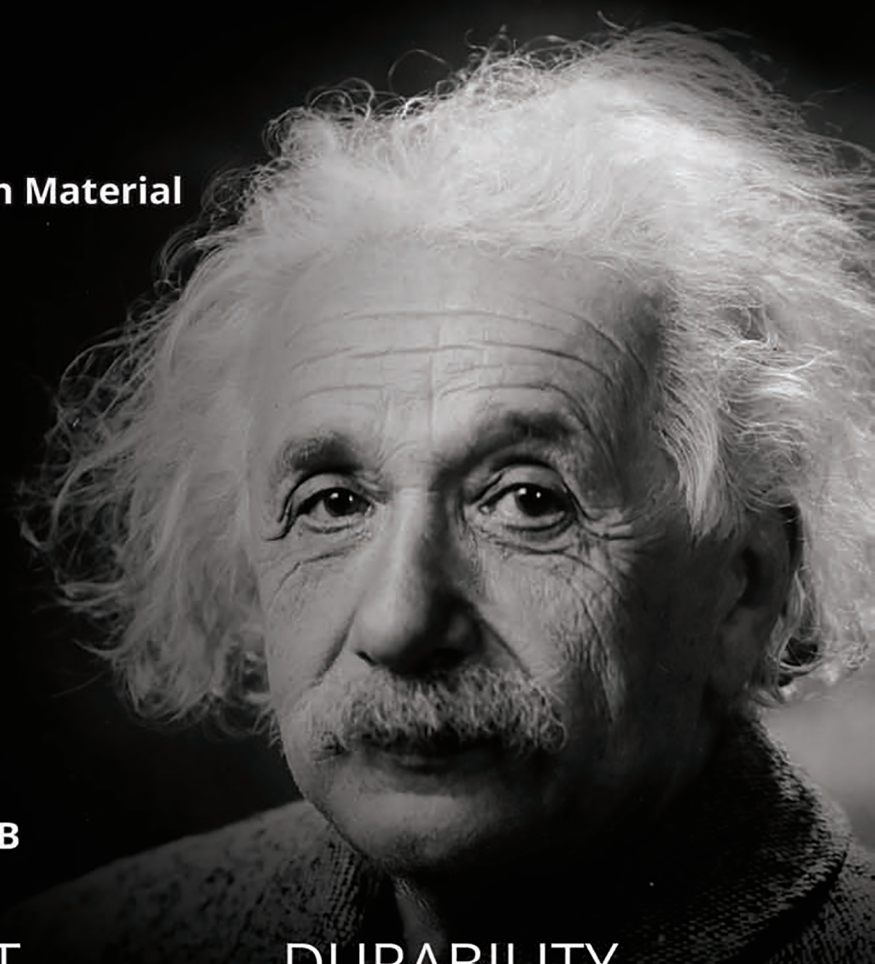

SHIFT QUALITY

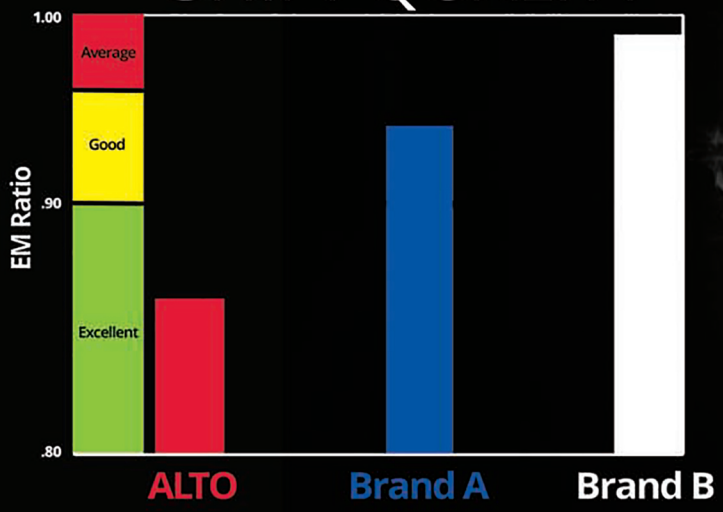

DYNAMIC COEFFICIENT

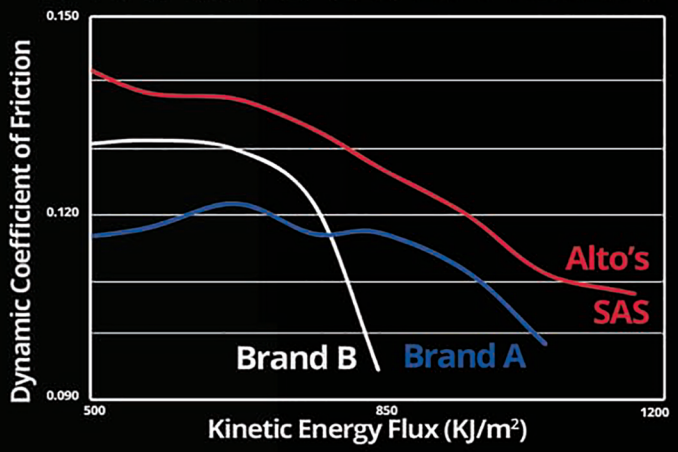

DURABILITY

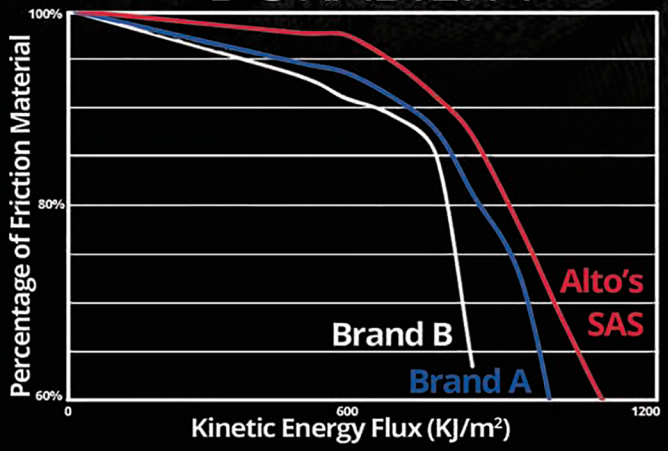

SAS Friction Material

Superior Shift: 8% shift improvement over Brand A and 12% improvement over Brand B

Superior Durability: 9% capacity advantage over Brand A and 20% over Brand B

Superior Torque: 5% greater torque than Brand A and 14% more than Brand B

For complete details on Alto's SAS Friction Material go to **altousa.com/am/HondaSAS**

Shift Your Thinking • www.altoUSA.com

ALTO®
MADE IN USA
SINCE 1952

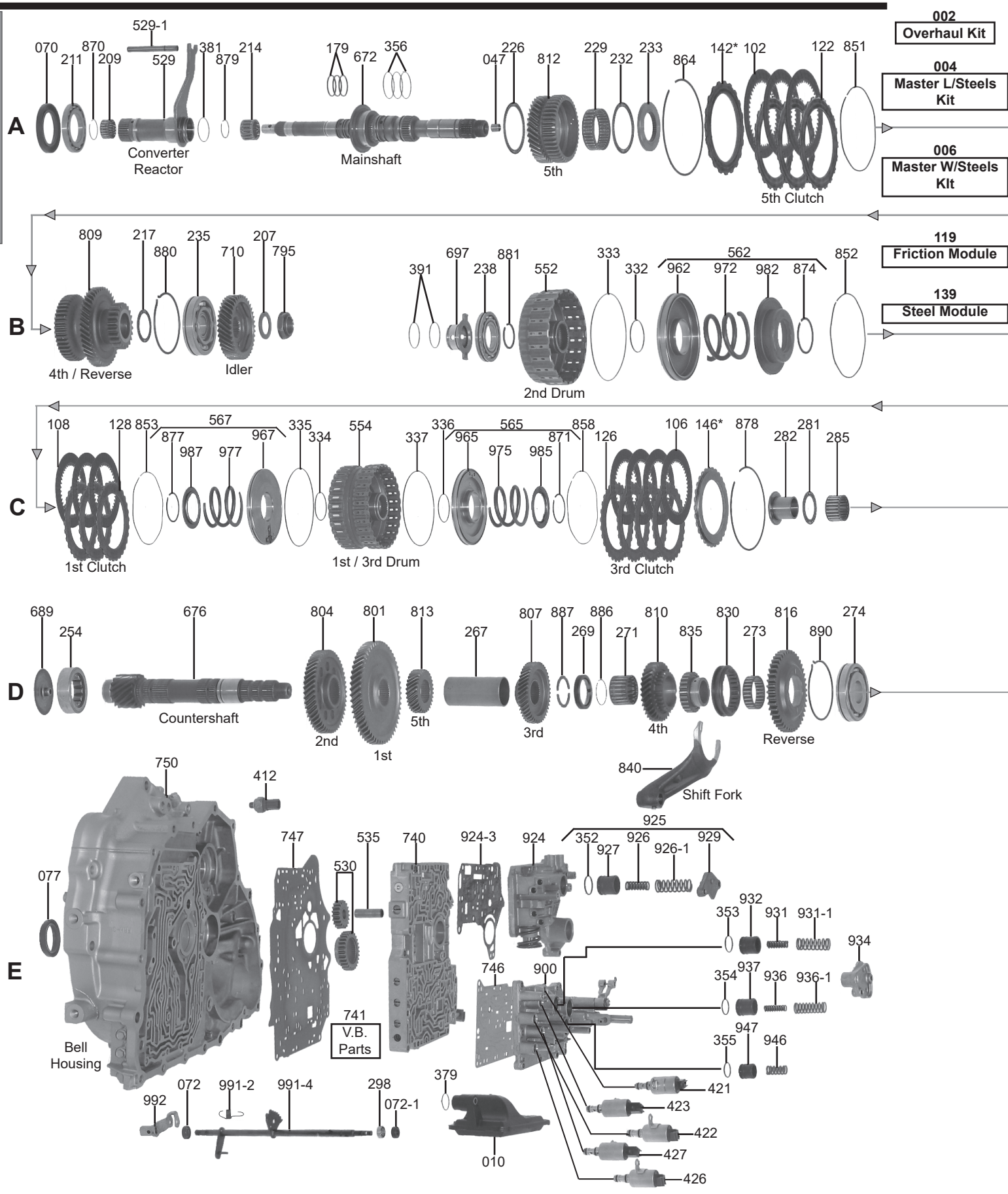
A
529-1
070
211
870
209
529
381
879
214
Converter
Reactor
179
672
356
Mainshaft
047
226
812
5th
229
232
233
864
142*
102
122
851
5th Clutch
002
Overhaul Kit
004
Master L/Steels
Kit
006
Master W/Steels
Kit
B
809
217
880
235
710
207
795
4th / Reverse
Idler
391
697
238
881
552
2nd Drum
333
332
562
962
972
982
874
852
119
Friction Module
139
Steel Module
C
108
128
853
567
877
987
977
967
335
334
1st Clutch
554
1st / 3rd Drum
337
336
565
965
975
985
871
858
126
3rd Clutch
106
146*
878
282
281
285
D
689
254
Countershaft
676
804
801
2nd
1st
813
5th
267
807
3rd
887
886
269
271
4th
810
835
830
273
Reverse
816
890
274
840
Shift Fork
E
750
412
077
Bell
Housing
747
530
535
741
V.B.
Parts
740
924-3
924
925
352
927
926
926-1
929
932
353
931
931-1
934
354
937
936
936-1
746
900
947
355
946
421
423
422
427
426
379
010
992
072
991-2
991-4
298
072-1

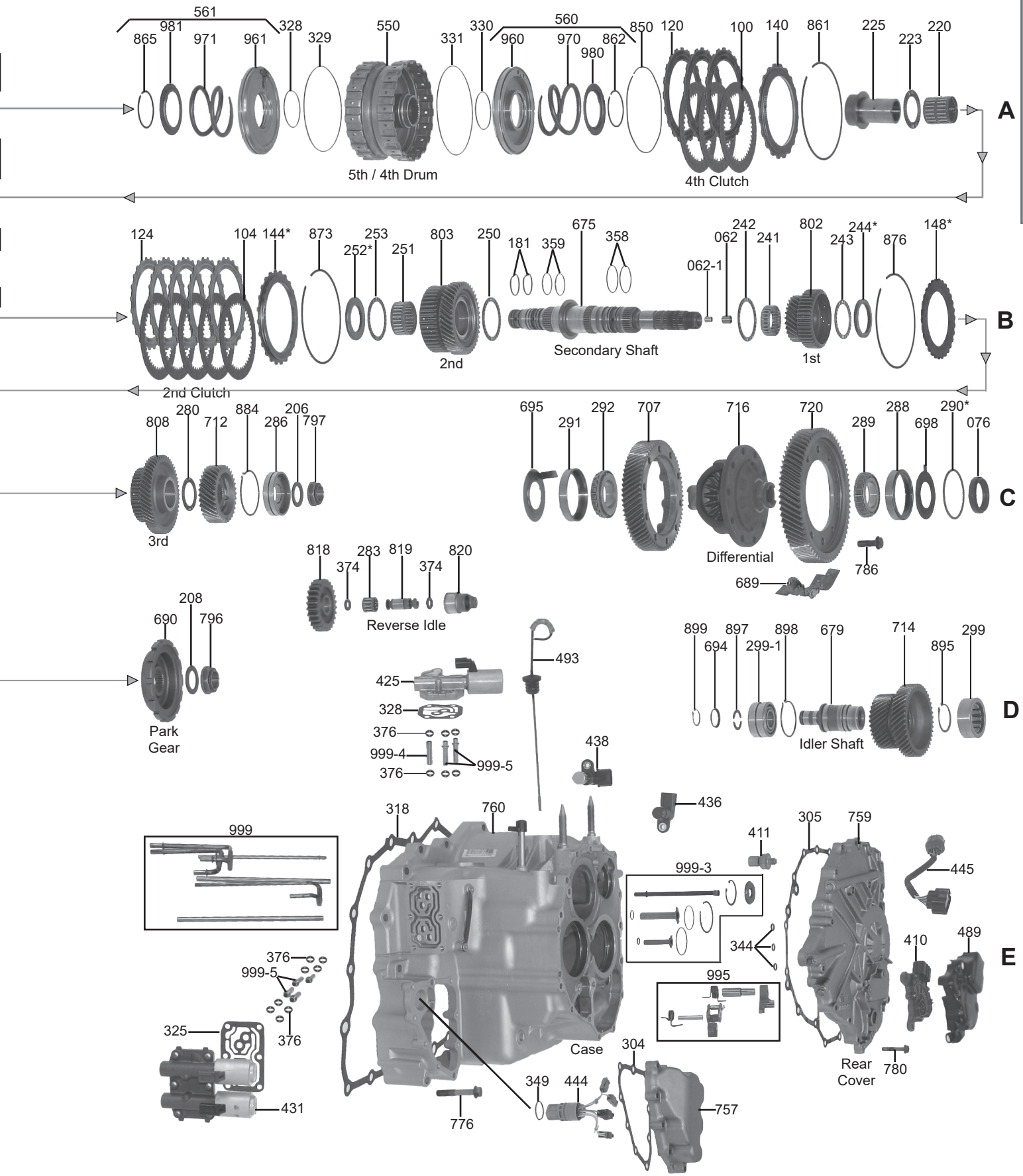

© Whatever It Takes Transmission Parts. Inc.

PART #	OVERHAUL KITS	QTY	REFERENCE #
50002A	Overhaul Kit, BCLA/BZHA/BZJA/BZKA-1/BZNA/GPLA/GPPA-3/GPPA-4/MCLA/MCTA/MKYA/MKZA/MNZA/MRMA/MZHA/MZJA/MZKA-5 2003-Up (For Bonded Retainer Sell 3 Pieces Of A160987A)	1	
160002BP	Overhaul Kit, BZKA/MNZA/MZJA/BZJA/ BZNA/MZKA/MZHA/BZHA (2WD/4WD) (Also Fits M91A/B90A)(With Pistons) 2007-12	1	
160002E	Overhaul Kit, B90A/MM7A/M91A 2008-Up (For Bonded Retainer Sell 2 Pieces Of A160985D & 1 A160987A)	1	

PART #	MASTER L/STEELS KIT	QTY	REFERENCE #
160004A	Master L/Steels Kit, BCLA/GPLA/GPPA-3/GPPA-4/MCLA/MKYA/MKZA/MRMA 2003-06 (BCLA/MCLA 2003-05)(For Bonded Retainer Sell 3 Pieces Of A160987A)	1	
160004BP	Master L/Steels, MNZA/MZJA/BZJA/BZNA/ MZKA/MZHA/BZHA (With Pistons) 2007-12 (Raybestos Frictions)	1	
160004E	Master L/Steels Kit, B90A 2008-11 (With GPX Frictions) (For Bonded Retainer Sell 2 Pieces Of A160985D & 1 A160987A)	1	
160004T	Master L/Steels Kit, MCTA 2004 (With GPX Frictions)	1	
160004TA	Master L/Steels Kit, MCTA 2005 (With GPX Frictions)	1	
160004TB	Master L/Steels Kit, MCTA 2006-08 (With GPX Frictions)(Also Fits BCLA/MCLA 2006-07)(MZHA 2007-11)(MZJA 2007-11)	1	

PART #	MASTER W/STEELS KIT	QTY	REFERENCE #
160006A	Master W/Steels Kit, BCLA/MCLA 2003-04 (For Bonded Retainer Sell 3 Pieces Of A160987A)	1	
160006AA	Master W/Steels Kit, BCLA/GPLA/GPPA-3/GPPA-4/MCLA/MKYA/MKZA 2005-06 (BCLA/MCLA 2005)(For Bonded Retainer Sell 3 Pieces Of A160987A)	1	
160006E	Master W/Steels Kit, B90A/MM7A 2008-Up (For Bonded Retainer Sell 2 Pieces Of A160985D & 1 A160987A)	1	

PART #	FILTERS	QTY	REFERENCE #
160010A	Filter, BCLA/GPLA/GPPA-3/GPPA-4/MCTA/MKYA/MKZA/MKZA/MRMA (Square Pick-Up Near The Edge) 2002-08	1	F402
160010E	Filter, BCLA/BJ1A/BZHA/BZJA/BZKA-1/BZNA/B90A/GPLA/GPPA/MCLA/MKYA/MKZA/MM7A/MNZA/MRMA/MZHA/MZJA/M91A 2003-11 (Also Fits B5RA)	1	25420-RXH-003

PART #	BUSHINGS	QTY	REFERENCE #
50047A	Bushing, BCLA/BZHA/BZKA-1/BZNA/B90A/GPLA/GPPA-3/GPPA-4/MCLA/MCTAMKYA/MKZA/MM7A/MNZA/MRMA/MZHA/MZJA Mainshaft (.398"Wide)(.415"OD)(.315"ID) 2002-11	1	
180049-1A	Bushing, BCLA/BZHA/BZKA-1/BZNA/B90A/GPLA/GPPA-3/GPPA-4/MCLA/MCTA/MKYA/MKZA/MM7A/MNZA/MRMA/MZHA/MZJA Secondary Shaft (Small, Inner)(.318"Wide)(.275"ID) 2002-11	1	
180049A	Bushing, BCLA/BZHA/BZKA-1/BZNA/B90A/GPLA/GPPA-3/GPPA-4/MCLA/MCTA/MKYA/MKZA/MM7A/MNZA/MRMA/MZHA/MZJA Secondary Shaft (Large, Outer)(.393"Wide)(.455"ID) 2002-11	1	
T-28999	Tool Set, Acura/Honda(22 Pcs Bushing Remover & Installer) (This Set Works For All Honda's W/Bushings)	1	

PART #	METAL CLAD SEALS	QTY	REFERENCE #
60070A	Seal, BCLA/BZHA/BZJA/BZKA-1/BZNA/B90A/GPLA/GPPA-3/GPPA-4/MCLA/MCTA/MKYA/MKZA/MM7A/MNZA/MRMA/MZHA/MZJA/MZKA-5/M91A Converter (44 X 68 X 8mm) (Counter Clockwise Helix) 2002-11	1	91207-P7Z-003
50072-1A	Seal, BCLA/BZHA/BZKA-1/BZNA/B90A/GPLA/GPPA-3/GPPA-4/MCLA/MCTAMKYA/MKZA/MM7A/MNZA/MRMA/MZHA/MZJA Manual Shaft (In Rear Cover)(.275"Thick)(.715"OD) 2002-11	1	91201-PA9-004
60072	Seal, BCLA/BZHA/BZJA/BZKA-1/BZNA/B90A/GPLA/GPPA-3/GPPA-4/MCLA/MCTA/MKYA/MKZA/MM7A/MNZA/MRMA/MZHA/MZJA/MZKA-5/M91A Manual Shaft (In Bell Hsg)(.275"Thick) (8.75"OD) 2002-11	1	91209-612-003
40076A	Seal, BCLA/BZHA/BZKA-1/BZNA/B90A/GPLA/GPPA-3/GPPA-4/MCLA/MCTA/MKYA/MKZA/MM7A/MNZA/MRMA/MZHA/MZJA Axle (# 076)(Case Side)(.485"Thick)(2.220"OD)(1.545"ID) 2002-11	1	91205-POX-005
160077A	Seal, BCLA/MCLA Axle (Bell Housing Side)(40X58X8mm) 2003-06	1	91206-PX5-005
160077B	Seal, BZHA/BZJA/BZKA-1/BZNA/B90A/GPLA/GPPA-3/GPPA-4/MCTA/MKYA/MKZA/MM7A/MNZA/MRMA/MZHA/MZKA-5 Axle (Bell Hsg Side)(35X58X8mm) 2002-11	1	91206-RCT-003

PART #	FRICTIONS	QTY	REFERENCE #
160100A	Use 20104H	AR	

© Whatever It Takes Transmission Parts. Inc.

160100AA	Use 20104H	AR		
160100G	Use 20104H	AR		
160100T	Use 50108A	AR		
160102A	Use 20104H	AR		
160102AA	Use 20104H	AR		
160102T	Use 50108A	AR		
160104A	Use 50104A	AR		
160104D	Friction, BZKA-1/BZNA/MCLA/MM7A/MNZA/MZJA 2nd Clutch (.078")(44 Teeth)(4.762"OD) 2003-11	6		22545-RCL-003
160104E	Friction, BZHA/B90A/MZHA 2nd Clutch (.078")(44 Teeth)(4.762"OD) 2007-11	6		22545-R90-003
20104H	Friction, BCLA/BZHA/BZJA/BZKA-1/BZNA/B90A/GPLA/GPPA-3/GPPA-4/MCLA/MKYA/MKZA/MM7A/MNZA/MRMA/MZHA/MZJA 4th Clutch (# 100)(.076")(44 Teeth)(4.830"OD) 2002-11 (Also Fits BCLA/BZHA/BZJA/BZKA-1/BZNA/B90A/GPLA/GPPA-3/GPPA-4/MCLA/MKYA/MKZA/MM7A/MNZA/MRMA/MZHA/MZJA 5th Clutch (# 102) 2002-11)(Also Fits MCTA 4th Clutch # 100, & 5th Clutch # 102 2005-08)	3-8		22545-P7T-003
50104A	Friction, BCLA/GPLA/GPPA-3/GPPA-4/MCTA/MKYA/MKZA/MRMA 2nd Clutch (.078") (42 Teeth)(4.852"OD) 2002-08	5		22545-PRP-013
160106A	Use 50108A	AR		
160106D	Friction, BZHA/BZKA-1/BZNA/MCLA/MNZA/MZHA/MZJA 3rd Clutch (.076")(42 Teeth) (4.765"OD) 2003-11 (Also Fits BZHA/BZKA-1/BZNA/MCLA/MNZA/MZHA/MZJA 1st Clutch # 108 2003-11)	5-11		22544-RCL-A01
160106E	Friction, B90A/MM7A 3rd Clutch (.076")(42 Teeth)(4.765"OD) 2008-11 (Also Fits B90A/MM7A 1st Clutch # 108 2008-11)	5-11		22544-R91-003
160106G	Friction, GPLA 3rd Clutch (.076")(42 Teeth) (4.670"OD) 2005-06 (Also Fits GPLA 1st Clutch # 108 2005-06)	5-10		22545-RCR-003
160106T	Friction, MCTA 3rd Clutch (.076")(44 Teeth)(4.695"OD) 2004-08 (Also Fits MCTA 1st Clutch # 108 2004-08)	5-10		22544-RCT-004
160108D	Use 106106D	AR		
160108G	Use 160106G	AR		
50108A	Friction, BCLA/GPPA-3/GPPA-4/MKYA/MKZA/MRMA 1st Clutch # 108 (.076")(42 Teeth) (4.671"OD) 2002-06 (Also Fits BCLA/GPPA-3/GPPA-4/MKYA/MKZA/MRMA 3rd Clutch # 106 2002-06)(Also Fits MCTA 4th Clutch # 100, & 5th Clutch # 102 2004 Only)	3-7		22544-PRP-003
160119A	Friction Module, BCLA/BZKA/GPLA/GPPA/MCLA/MCTA/MKYA/MRMA/MZKA 2003-Up (GPX Frictions)(Also Fits BZHA/BZJA/MKZA/MZHA/MZJA/MM7A 2002-06)	1		
160119E	Friction Module, B90A 2008-Up (With GPX Frictions)	1		
160119T	Friction Module, MCTA 2004 (With GPX Frictions)	1		
160119TA	Friction Module, MCTA 2005 (With GPX Frictions)	1		
160119TB	Friction Module, MCTA 2006-08 (With GPX Frictions)(Also Fits BCLA/MCLA 2006-07) (MZHA 2007-11)(MZJA 2007-11)(BZJA 2007-11)(MM7A 2009-12)(BZNA-1 2008)(BZHA 2007-11) (MNZA 2007-11)	1		

PART #	STEELS	QTY		REFERENCE #
160120A	Steel, BCLA 5th Clutch (.092")(24 Teeth)(3.695"ID)(5.105"OD) 2003-06 (Also Fits BCLA 4th Clutch # 122 2003-06)	3-6		22653-RCL-003
160120AA	Steel, BCLA/BZHA/BZKA-1/BZNA/B90A/GPLA/GPPA-3/GPPA-4/MCLA/MCTA/MKYA/MKZA/MM7A/MNZA/MRMA/MZHA/MZJA 4th Clutch (.079")(24 Teeth)(3.695"ID)(5.105"OD) 2002-11 (MCTA 2005-08)(Also Fits BCLA/BZHA/BZKA-1/BZNA/B90A/GPLA/GPPA-3/GPPA-4/MCLA/MCTA/MKYA/MZKA/MM7A/MNZA/MRMA/MZHA/MZJA 5th Clutch # 122 2002-11) (MCTA 2005-08)	3-8		22653-PRP-901
160120T	Steel, MCTA 4th Clutch (.079")(24 Teeth)(3.670"ID)(4.985"OD) (2004 Only) (Also Fits MCTA 5th Clutch # 122 2004 Only)	4-8		22634-RCL-003
160122AA	Use 160120AA	AR		
160122T	Use 160120T	AR		
160124A	Use 50124A	AR		
160124D	Steel, BZHA/BZKA-1/BZNA/B90A/MCLA/MM7A/MNZA/MZHA/MZJA 2nd Clutch (.078")(24 Teeth) (3.675"ID)(5.975"OD) 2003-11	6		22643-R90-003
160124A	Use 80128A			
160126A	Use 50128A	AR		
160126C	Steel MRMA 3rd Clutch (.081")(20 Teeth)(3.680"ID) 2002-06 (Also Fits MRMA 1st Clutch # 128 2002-06)	4-8		22543-PRP-003
160126E	Steel, BZHA/BZKA-1/BZNA/B90A/MCLA/MM7A/MNZA/MZHA/MZJA 3rd Clutch (.064") (24 Teeth)(3.675"ID) 2003-11 (Also Fits BZHA/BZKA-1/BZNA/B90A/MCLA/MNZA/MM7A/MZHA/MZJA 1st Clutch # 128 2003-11)	5-11		22543-R90-A01
160126T	Steel, MCTA 3rd Clutch (.064")(30 Teeth)(3.689"ID) 2004-08 (Also Fits MCTA 1st Clutch # 128 2004-08)	5-10		22543-RCT-A01
160128A	Use 50128A	AR		
80128A	Steel, BZKA/MCVA/MRVA/MZKA 2nd Clu 2002-06 (Also Fits BCLA/GPLA/GPPA-4/MCTA/MKYA/MKZA/MRMA 2002-08)	4-5		
160128C	Use 160126C	AR		

© Whatever It Takes Transmission Parts. Inc.

PART #	STEELS (Continued)	QTY	REFERENCE #
160128E	Use 160126E	AR	
160128T	Use 160126T	AR	
50128A	Steel, BCLA/GPLA/GPPA-3/GPPA-4/MKYA/MKZA 1st Clutch (.064")(24 Teeth)(4.988"OD) (3.670"ID) 2002-06 (Also Fits BCLA/GPLA/GPPA-3/GPPA-4/MKYA/MKZA 3rd Clutch # 126 2002-06)	5-10	22543-RCL-003

PART #	PRESSURE PLATES	QTY	REFERENCE #
160139A	Steel Module, BCLA/BZHA/BZJA /BZNA/GPLA/GPPA/MCLA/MKYA/ MKZA/MM7A/MRMA/ MZHA/MZJA 2003-05	1	
160139E	Steel Module, B90A/BCLA/BZHA /BZJA/BZNA/GPLA/GPPA/M91A/ MCLA/MKYA/MKZA/MM7A/ MRMA/MZHA/MZJA 2007-11	1	
160139T	Steel Module, MCTA 2004	1	
160139TA	Steel Module, MCTA 2005	1	
160139TB	Steel Module, MCTA 2006-08	1	
160140AA	Pressure Plate, BCLA/BZHA/BZKA-1/BZNA/B90A/GPLA/GPPA-3/GPPA-4/MCLA/MKYA/MKZA/ MM7A/MNZA/MRMA/MZHA/MZJA 4th Clutch (.082")(24 Teeth)(5.125"OD)(3.675"ID) 2002-11 (Also Fits BCLA/BZHA/BZKA-1/BZNA/B90A/GPLA/GPPA-3/GPPA_4/MCLA/MKYA/MKZA/ MM7A/MNZA/MRMA/MZHA/MZJA 5th Clutch # 142 2002-11) (Also Fits MCTA 4th Clutch # 120 & 5th Clutch # 142 2005-08)	1-2	22581-RCL-003
160140AB	Pressure Plate, BCLA/BZHA/BZKA-1/BZNA/B90A/GPLA/GPPA-3/GPPA-4/MCLA/MKYA/MKZA/ MM7A/MNZA/MRMA/MZHA/MZJA 4th Clutch (.086")(24 Teeth)(5.125"OD)(3.675"ID) 2002-11 (Also Fits BCLA/BZHA/BZKA-1/BZNA/B90A/GPLA/GPPA-3/GPPA-4/MCLA/MKYA/MKZA/ MM7A/MNZA/MRMA/MZHA/MZJA 5th Clutch # 142 2002-11) (Also Fits MCTA 4th Clutch # 120 & 5th Clutch # 142 2005-08)	1-2	22582-RCL-003
160140AC	Pressure Plate, BCLA/BZHA/BZKA-1/BZNA/B90A/GPLA/GPPA-3/GPPA-4/MCLA/MKYA/MKZA/ MM7A/MNZA/MRMA/MZHA/MZJA 4th Clutch (.090")(24 Teeth)(5.125"OD)(3.675"ID) 2002-11 (Also Fits BCLA/BZHA/BZKA-1/BZNA/B90A/GPLA/GPPA-3/GPPA-4/MCLA/MKYA/MKZA/ MM7A/MNZA/MRMA/MZHA/MZJA 5th Clutch # 142 2002-11) (Also Fits MCTA 4th Clutch # 120 & 5th Clutch # 142 2005-08)	1-2	22583-RCL-003
160140AD	Pressure Plate, BCLA/BZHA/BZKA-1/BZNA/B90A/GPLA/GPPA-3/GPPA-4/MCLA/MKYA/MKZA/ MM7A/MNZA/MRMA/MZHA/MZJA 4th Clutch (.094")(24 Teeth)(5.125"OD)(3.675"ID) 2002-11 (Also Fits BCLA/BZHA/BZKA-1/BZNA/B90A/GPLA/GPPA-3/GPPA-4/MCLA/MKYA/MKZA/ MM7A/MNZA/MRMA/MZHA/MZJA 5th Clutch # 142 2002-11) (Also Fits MCTA 4th Clutch # 120 & 5th Clutch # 142 2005-08)	1-2	22584-RCL-003
160140AE	Pressure Plate, BCLA/BZHA/BZKA-1/BZNA/B90A/GPLA/GPPA-3/GPPA-4/MCLA/MKYA/MKZA/ MM7A/MNZA/MRMA/MZHA/MZJA 4th Clutch (.098")(24 Teeth)(5.125"OD)(3.675"ID) 2002-11 (Also Fits BCLA/BZHA/BZKA-1/BZNA/B90A/GPLA/GPPA-3/GPPA-4/MCLA/MKYA/MKZA/ MM7A/MNZA/MRMA/MZHA/MZJA 5th Clutch # 142 2002-11) (Also Fits MCTA 4th Clutch # 120 & 5th Clutch # 142 2005-08)	1-2	22585-RCL-003
160140AF	Pressure Plate, BCLA/BZHA/BZKA-1/BZNA/B90A/GPLA/GPPA-3/GPPA-4/MCLA/MKYA/MKZA/ MM7A/MNZA/MRMA/MZHA/MZJA 4th Clutch (.102")(24 Teeth)(5.125"OD)(3.675"ID) 2002-11 (Also Fits BCLA/BZHA/BZKA-1/BZNA/B90A/GPLA/GPPA-3/GPPA-4/MCLA/MKYA/MKZA/ MM7A/MNZA/MRMA/MZHA/MZJA 5th Clutch # 142 2002-11) (Also Fits MCTA 4th Clutch # 120 & 5th Clutch # 142 2005-08)	1-2	22586-RCL-003
160140AG	Pressure Plate, BCLA/BZHA/BZKA-1/BZNA/B90A/GPLA/GPPA-3/GPPA-4/MCLA/MKYA/MKZA/ MM7A/MNZA/MRMA/MZHA/MZJA 4th Clutch (.106")(24 Teeth)(5.125"OD)(3.675"ID) 2002-11 (Also Fits BCLA/BZHA/BZKA-1/BZNA/B90A/GPLA/GPPA-3/GPPA-4/MCLA/MKYA/MKZA/ MM7A/MNZA/MRMA/MZHA/MZJA 5th Clutch # 142 2002-11) (Also Fits MCTA 4th Clutch # 120 & 5th Clutch # 142 2005-08)	1-2	22584-RCL-003
160140AH	Pressure Plate, BCLA/BZHA/BZKA-1/BZNA/B90A/GPLA/GPPA-3/GPPA-4/MCLA/MKYA/MKZA/ MM7A/MNZA/MRMA/MZHA/MZJA 4th Clutch (.110")(24 Teeth)(5.125"OD)(3.675"ID) 2002-11 (Also Fits BCLA/BZHA/BZKA-1/BZNA/B90A/GPLA/GPPA-3/GPPA-4/MCLA/MKYA/MKZA/ MM7A/MNZA/MRMA/MZHA/MZJA 5th Clutch # 142 2002-11) (Also Fits MCTA 4th Clutch # 120 & 5th Clutch # 142 2005-08)	1-2	22588-RCL-003
160140AJ	Pressure Plate, BCLA/BZHA/BZKA-1/BZNA/B90A/GPLA/GPPA-3/GPPA-4/MCLA/MKYA/MKZA/ MM7A/MNZA/MRMA/MZHA/MZJA 4th Clutch (.114")(24 Teeth)(5.125"OD)(3.675"ID) 2002-11 (Also Fits BCLA/BZHA/BZKA-1/BZNA/B90A/GPLA/GPPA-3/GPPA-4/MCLA/MKYA/MKZA/ MM7A/MNZA/MRMA/MZHA/MZJA 5th Clutch # 142 2002-11) (Also Fits MCTA 4th Clutch # 120 & 5th Clutch # 142 2005-08)	1-2	22589-RCL-003
160140TA	Pressure Plate, MCTA 4th Clutch (.082")(#1)(24 Teeth)(4.995"OD)(3.675"ID) 2004 (Also Fits MCTA 5th Clutch # 142 2004)	1-2	22581-RAY-003
160140TB	Pressure Plate, MCTA 4th Clutch (.086")(#2)(24 Teeth)(4.995"OD)(3.675"ID) 2004 (Also Fits MCTA 5th Clutch # 142 2004)	1-2	22582-RAY-003
160140TC	Pressure Plate, MCTA 4th Clutch (.090")(#3)(24 Teeth)(4.995"OD)(3.675"ID) 2004 (Also Fits MCTA 5th Clutch # 142 2004)	1-2	22583-RAY-003
160140TD	Pressure Plate, MCTA 4th Clutch (.094")(#4)(24 Teeth)(4.995"OD)(3.675"ID) 2004 (Also Fits MCTA 5th Clutch # 142 2004)	1-2	22584-RAY-003

© Whatever It Takes Transmission Parts. Inc.

160140TE ..... Pressure Plate, MCTA 4th Clutch (.098")(#5)(24 Teeth)(4.995"OD)(3.675"ID) 2004 ..... (Also Fits MCTA 5th Clutch # 142 2004) ..... 1-2 ..... 22585-RAY-003

160140TF ..... Pressure Plate, MCTA 4th Clutch (.102")(#6)(24 Teeth)(4.995"OD)(3.675"ID) 2004 ..... (Also Fits MCTA 5th Clutch # 142 2004) ..... 1-2 ..... 22586-RAY-003

160140TG ..... Pressure Plate, MCTA 4th Clutch (.106")(#7)(24 Teeth)(4.995"OD)(3.675"ID) 2004 ..... (Also Fits MCTA 5th Clutch # 142 2004) ..... 1-2 ..... 22587-RAY-003

160140TH ..... Pressure Plate, MCTA 4th Clutch (.110")(#8)(24 Teeth)(4.995"OD)(3.675"ID) 2004 ..... (Also Fits MCTA 5th Clutch # 142 2004) ..... 1-2 ..... 22588-RAY-003

160140TJ ..... Pressure Plate, MCTA 4th Clutch (.114")(#9)(24 Teeth)(4.995"OD)(3.675"ID) 2004 ..... (Also Fits MCTA 5th Clutch # 142 2004) ..... 1-2 ..... 22589-RAY-003

160142A ..... Use 160140AA - 160140AJ ....

160142T ..... Use 160140TA - 160140TJ ....

160144A ..... Use 50148AA -50148AJ ....

160144DA ..... Pressure Plate, BZHA/BZNA/B90A/MCLA/MM7A/MNZA/MZHA/MZJA 2nd Clutch (.094") ..... (24 Teeth)(3.680"ID)(5.085"OD) 2003-11 ..... 1 ..... 22569-RCL-A01

160144DB ..... Pressure Plate, BZHA/BZNA/B90A/MCLA/MM7A/MNZA/MZHA/MZJA 2nd Clutch (.098") ..... (24 Teeth)(3.680"ID)(5.085"OD) 2003-11 ..... 1 ..... 22570-RCL-A01

160144DC ..... Pressure Plate, BZHA/BZNA/B90A/MCLA/MM7A/MNZA/MZHA/MZJA 2nd Clutch (.102") ..... (24 Teeth)(3.680"ID)(5.085"OD) 2003-11 ..... 1 ..... 22571-RCL-A01

160144DD ..... Pressure Plate, BZHA/BZNA/B90A/MCLA/MM7A/MNZA/MZHA/MZJA 2nd Clutch (.106") ..... (24 Teeth)(3.680"ID)(5.085"OD) 2003-11 ..... 1 ..... 22572-RCL-A01

160144DE ..... Pressure Plate, BZHA/BZNA/B90A/MCLA/MM7A/MNZA/MZHA/MZJA 2nd Clutch (.110") ..... (24 Teeth)(3.680"ID)(5.085"OD) 2003-11 ..... 1 ..... 22573-RCL-A01

160144DF ..... Pressure Plate, BZHA/BZNA/B90A/MCLA/MM7A/MNZA/MZHA/MZJA 2nd Clutch (.114") ..... (24 Teeth)(3.680"ID)(5.085"OD) 2003-11 ..... 1 ..... 22574-RCL-A01

160144DG ..... Pressure Plate, BZHA/BZNA/B90A/MCLA/MM7A/MNZA/MZHA/MZJA 2nd Clutch (.118") ..... (24 Teeth)(3.680"ID)(5.085"OD) 2003-11 ..... 1 ..... 22575-RCL-A01

160144DH ..... Pressure Plate, BZHA/BZNA/B90A/MCLA/MM7A/MNZA/MZHA/MZJA 2nd Clutch (.122") ..... (24 Teeth)(3.680"ID)(5.085"OD) 2003-11 ..... 1 ..... 22576-RCL-A01

160145A ..... Apply Plate, BCLA/GPLA/GPPA-3/GPPA-4/MCTA/MKYA/MKZA 2nd Clutch (.157")(24 Teeth) ..... (3.675"ID)(4.990"OD) 2003-08 ..... 1 ..... 22643-RCL-801

160146CA ..... Pressure Plate, MRMA 3rd Clutch (.090")(#1)(20 Teeth)(3.670"ID) 2002-06 ..... (Also Fits MRMA 1st Clutch # 148 2002-06) ..... 1-2 ..... 22551-PRP-003

160146CB ..... Pressure Plate, MRMA 3rd Clutch (.094")(#2)(20 Teeth)(3.670"ID) 2002-06 ..... (Also Fits MRMA 1st Clutch # 148 2002-06) ..... 1-2 ..... 2252-PRP-003

160146CC ..... Pressure Plate, MRMA 3rd Clutch (.098")(#3)(20 Teeth)(3.670"ID) 2002-06 ..... (Also Fits MRMA 1st Clutch # 148 2002-06) ..... 1-2 ..... 22553-PRP-003

160146CD ..... Pressure Plate, MRMA 3rd Clutch (.102")(#4)(20 Teeth)(3.670"ID) 2002-06 ..... (Also Fits MRMA 1st Clutch # 148 2002-06) ..... 1-2 ..... 22554-PRP-003

160146CE ..... Pressure Plate, MRMA 3rd Clutch (.106")(#5)(20 Teeth)(3.670"ID) 2002-06 ..... (Also Fits MRMA 1st Clutch # 148 2002-06) ..... 1-2 ..... 22555-PRP-003

160146CF ..... Pressure Plate, MRMA 3rd Clutch (.110")(#6)(20 Teeth)(3.670"ID) 2002-06 ..... (Also Fits MRMA 1st Clutch # 148 2002-06) ..... 1-2 ..... 22556-PRP-003

160146CG ..... Pressure Plate, MRMA 3rd Clutch (.114")(#7)(20 Teeth)(3.670"ID) 2002-06 ..... (Also Fits MRMA 1st Clutch # 148 2002-06) ..... 1-2 ..... 22557-PRP-003

160146CH ..... Pressure Plate, MRMA 3rd Clutch (.118")(#8)(20 Teeth)(3.670"ID) 2002-06 ..... (Also Fits MRMA 1st Clutch # 148 2002-06) ..... 1-2 ..... 22558-PRP-003

160146CJ ..... Pressure Plate, MRMA 3rd Clutch (.122")(#9)(20 Teeth)(3.670"ID) 2002-06 ..... (Also Fits MRMA 1st Clutch # 148 2002-06) ..... 1-2 ..... 22559-PRP-003

160146CK ..... Pressure Plate, MRMA 3rd Clutch (.126")(#10)(20 Teeth)(3.670"ID) 2002-06 ..... (Also Fits MRMA 1st Clutch # 148 2002-06) ..... 1-2 ..... 22560-PRP-003

160146CL ..... Pressure Plate, MRMA 3rd Clutch (.130")(#11)(20 Teeth)(3.670"ID) 2002-06 ..... (Also Fits MRMA 1st Clutch # 148 2002-06) ..... 1-2 ..... 22561-PRP-003

160146CM ..... Pressure Plate, MRMA 3rd Clutch (.134")(#12)(20 Teeth)(3.670"ID) 2002-06 ..... (Also Fits MRMA 1st Clutch # 148 2002-06) ..... 1-2 ..... 22562-PRP-003

160146DA ..... Pressure Plate, BZHA/BZKA-1/BZNA/B90A/MCLA/MM7A/MNZA/MZHA/MZJA 3rd Clutch ..... (.082")(#1)(24 Teeth)(3.675"ID) 2003-11 (Also Fits BZHA/BZKA-1/BZNA/B90A/MCLA/MM7A/ ..... MNZA/MZHA/MZJA 1st Clutch # 148 2003-11) ..... 1-2 ..... 22551-RZH-003

160146DB ..... Pressure Plate, BZHA/BZKA-1/BZNA/B90A/MCLA/MM7A/MNZA/MZHA/MZJA 3rd Clutch ..... (.086")(#2)(24 Teeth)(3.675"ID) 2003-11 (Also Fits BZHA/BZKA-1/BZNA/B90A/MCLA/MM7A/ ..... MNZA/MZHA/MZJA 1st Clutch # 148 2003-11) ..... 1-2 ..... 22552-RZH-003

160146DC ..... Pressure Plate, BZHA/BZKA-1/BZNA/B90A/MCLA/MM7A/MNZA/MZHA/MZJA 3rd Clutch ..... (.090")(#3)(24 Teeth)(3.675"ID) 2003-11 (Also Fits BZHA/BZKA-1/BZNA/B90A/MCLA/MM7A/ ..... MNZA/MZHA/MZJA 1st Clutch # 148 2003-11) ..... 1-2 ..... 22553-RZH-003

160146DD ..... Pressure Plate, BZHA/BZKA-1/BZNA/B90A/MCLA/MM7A/MNZA/MZHA/MZJA 3rd Clutch ..... (.094")(#4)(24 Teeth)(3.675"ID) 2003-11 (Also Fits BZHA/BZKA-1/BZNA/B90A/MCLA/MM7A/ ..... MNZA/MZHA/MZJA 1st Clutch # 148 2003-11) ..... 1-2 ..... 22554-RZH-003

160146DE ..... Pressure Plate, BZHA/BZKA-1/BZNA/B90A/MCLA/MM7A/MNZA/MZHA/MZJA 3rd Clutch ..... (.098")(#5)(24 Teeth)(3.675"ID) 2003-11 (Also Fits BZHA/BZKA-1/BZNA/B90A/MCLA/MM7A/ ..... MNZA/MZHA/MZJA 1st Clutch # 148 2003-11) ..... 1-2 ..... 22555-RZH-003

© Whatever It Takes Transmission Parts. Inc.

PART #	PRESSURE PLATES (Continued)	QTY	REFERENCE #
160146DF	Pressure Plate, BZHA/BZKA-1/BZNA/B90A/MCLA/MM7A/MNZA/MZHA/MZJA 3rd Clutch (.102")(#6)(24 Teeth)(3.675"ID) 2003-11 (Also Fits BZHA/BZKA-1/BZNA/B90A/MCLA/MM7A/MNZA/MZHA/MZJA 1st Clutch # 148 2003-11)	1-2	22556-RZH-003
160146DG	Pressure Plate, BZHA/BZKA-1/BZNA/B90A/MCLA/MM7A/MNZA/MZHA/MZJA 3rd Clutch (.106")(#7)(24 Teeth)(3.675"ID) 2003-11 (Also Fits BZHA/BZKA-1/BZNA/B90A/MCLA/MM7A/MNZA/MZHA/MZJA 1st Clutch # 148 2003-11)	1-2	22557-RZH-003
160146DH	Pressure Plate, BZHA/BZKA-1/BZNA/B90A/MCLA/MM7A/MNZA/MZHA/MZJA 3rd Clutch (.110")(#8)(24 Teeth)(3.675"ID) 2003-11 (Also Fits BZHA/BZKA-1/BZNA/B90A/MCLA/MM7A/MNZA/MZHA/MZJA 1st Clutch # 148 2003-11)	1-2	22558-RZH-003
160146DJ	Pressure Plate, BZHA/BZKA-1/BZNA/B90A/MCLA/MM7A/MNZA/MZHA/MZJA 3rd Clutch (.114")(#9)(24 Teeth)(3.675"ID) 2003-11 (Also Fits BZHA/BZKA-1/BZNA/B90A/MCLA/MM7A/MNZA/MZHA/MZJA 1st Clutch # 148 2003-11)	1-2	22559-RZH-003
160146TA	Pressure Plate, MCTA 3rd Clutch (.102")(#1)(30 Teeth)(3.690"ID) 2004-05 (Also Fits MCTA 1st Clutch # 148 2004-05)	1-2	22551-RCT-004
160146TB	Pressure Plate, MCTA 3rd Clutch (.106")(#2)(30 Teeth)(3.690"ID) 2004-05 (Also Fits MCTA 1st Clutch # 148 2004-05)	1-2	22552-RCT-004
160146TC	Pressure Plate, MCTA 3rd Clutch (.110")(#3)(30 Teeth)(3.690"ID) 2004-05 (Also Fits MCTA 1st Clutch # 148 2004-05)	1-2	22553-RCT-004
160146TD	Pressure Plate, MCTA 3rd Clutch (.114")(#4)(30 Teeth)(3.690"ID) 2004-05 (Also Fits MCTA 1st Clutch # 148 2004-05)	1-2	22554-RCT-004
160146TE	Pressure Plate, MCTA 3rd Clutch (.118")(#5)(30 Teeth)(3.690"ID) 2004-05 (Also Fits MCTA 1st Clutch # 148 2004-05)	1-2	22555-RCT-004
160146TF	Pressure Plate, MCTA 3rd Clutch (.122")(#6)(30 Teeth)(3.690"ID) 2004-05 (Also Fits MCTA 1st Clutch # 148 2004-05)	1-2	22556-RCT-004
160146TG	Pressure Plate, MCTA 3rd Clutch (.126")(#7)(30 Teeth)(3.690"ID) 2004-05 (Also Fits MCTA 1st Clutch # 148 2004-05)	1-2	22557-RCT-004
160146TH	Pressure Plate, MCTA 3rd Clutch (.130")(#8)(30 Teeth)(3.690"ID) 2004-05 (Also Fits MCTA 1st Clutch # 148 2004-05)	1-2	22558-RCT-004
160146TJ	Pressure Plate, MCTA 3rd Clutch (.134")(#9)(30 Teeth)(3.690"ID) 2004-05 (Also Fits MCTA 1st Clutch # 148 2004-05)	1-2	22559-RCT-004
160148C	Use 160146CA - 160146CM		
160148D	Use 160146DA - 160146DJ	AR	
160148T	Use 160146TA - 160146TJ	AR	
50148AA	Pressure Plate, BCLA/GPLA/GPPA-3/GPPA-4/MKYA/MKZA 1st Clutch (.102")(#1)(24 Teeth)(3.675"ID) 2003-06 (Also Fits BCLA/GPLA/GPPA-3/GPPA-4/MKYA/MKZA 3rd Clutch # 146 2003-06)(Also Fits BCLA/BZKA-1/GPLA/GPPA-3/GPPA-4/MCTA/MKYA/MKZA/MRMA 2nd Clutch # 144 2002-08)	1-3	22551-RCL-003
50148AB	Pressure Plate, BCLA/GPLA/GPPA-3/GPPA-4/MKYA/MKZA 1st Clutch (.106")(#1)(24 Teeth)(3.675"ID) 2003-06 (Also Fits BCLA/GPLA/GPPA-3/GPPA-4/MKYA/MKZA 3rd Clutch # 146 2003-06) (Also Fits BCLA/BZKA-1/GPLA/GPPA-3/GPPA-4/MCTA/MKYA/MKZA/MRMA 2nd Clutch # 144 2002-08)	1-3	22552-RCL-003
50148AC	Pressure Plate, BCLA/GPLA/GPPA-3/GPPA-4/MKYA/MKZA 1st Clutch (.110")(#1)(24 Teeth)(3.675"ID) 2003-06 (Also Fits BCLA/GPLA/GPPA-3/GPPA-4/MKYA/MKZA 3rd Clutch # 146 2003-06) (Also Fits BCLA/BZKA-1/GPLA/GPPA-3/GPPA-4/MCTA/MKYA/MKZA/MRMA 2nd Clutch # 144 2002-08)	1-3	22553-RCL-003
50148AD	Pressure Plate, BCLA/GPLA/GPPA-3/GPPA-4/MKYA/MKZA 1st Clutch (.114")(#1)(24 Teeth)(3.675"ID) 2003-06 (Also Fits BCLA/GPLA/GPPA-3/GPPA-4/MKYA/MKZA 3rd Clutch # 146 2003-06) (Also Fits BCLA/BZKA-1/GPLA/GPPA-3/GPPA-4/MCTA/MKYA/MKZA/MRMA 2nd Clutch # 144 2002-08)	1-3	22554-RCL-003
50148AE	Pressure Plate, BCLA/GPLA/GPPA-3/GPPA-4/MKYA/MKZA 1st Clutch (.118")(#1)(24 Teeth)(3.675"ID) 2003-06 (Also Fits BCLA/GPLA/GPPA-3/GPPA-4/MKYA/MKZA 3rd Clutch # 146 2003-06)(Also Fits BCLA/BZKA-1/GPLA/GPPA-3/GPPA-4/MCTA/MKYA/MKZA/MRMA 2nd Clutch # 144 2002-08)	1-3	22555-RCL-003
50148AF	Pressure Plate, BCLA/GPLA/GPPA-3/GPPA-4/MKYA/MKZA 1st Clutch (.122")(#1)(24 Teeth)(3.675"ID) 2003-06 (Also Fits BCLA/GPLA/GPPA-3/GPPA-4/MKYA/MKZA 3rd Clutch # 146 2003-06) (Also Fits BCLA/BZKA-1/GPLA/GPPA-3/GPPA-4/MCTA/MKYA/MKZA/MRMA 2nd Clutch # 144 2002-08)	1-3	22556-RCL-003
50148AG	Pressure Plate, BCLA/GPLA/GPPA-3/GPPA-4/MKYA/MKZA 1st Clutch (.126")(#1)(24 Teeth)(3.675"ID) 2003-06 (Also Fits BCLA/GPLA/GPPA-3/GPPA-4/MKYA/MKZA 3rd Clutch # 146 2003-06)(Also Fits BCLA/BZKA-1/GPLA/GPPA-3/GPPA-4/MCTA/MKYA/MKZA/MRMA 2nd Clutch # 144 2002-08)	1-3	22557-RCL-003
50148AH	Pressure Plate, BCLA/GPLA/GPPA-3/GPPA-4/MKYA/MKZA 1st Clutch (.130")(#1)(24 Teeth)(3.675"ID) 2003-06 (Also Fits BCLA/GPLA/GPPA-3/GPPA-4/MKYA/MKZA 3rd Clutch # 146 2003-06) (Also Fits BCLA/BZKA-1/GPLA/GPPA-3/GPPA-4/MCTA/MKYA/MKZA/MRMA 2nd Clutch # 144 2002-08)	1-3	22558-RCL-003

© Whatever It Takes Transmission Parts. Inc.

50148AJ ..... Pressure Plate, BCLA/GPLA/GPPA-3/GPPA-4/MKYA/MKZA 1st Clutch (.134")(#1)(24 Teeth) (3.675"ID) 2003-06 (Also Fits BCLA/GPLA/GPPA-3/GPPA-4/MKYA/MKZA 3rd Clutch # 146 2003-06) (Also Fits BCLA/BZKA-1/GPLA/GPPA-3/GPPA-4/MCTA/MKYA/MKZA/MRMA 2nd Clutch # 144 2002-08) ..... 1-3 ..... 22559-RCL-003

PART #	VALVE BODY KITS	QTY	REFERENCE #
S50165A	Valve Body Kit, MPCA/M5PA/SMMA/SPCA/SP5A (Superior)	1	

PART #	SEALING RINGS	QTY	REFERENCE #
160179AT	Use 50179AT	AR	
50179AT	Ring, BCLA/BZHA/BZKA-1/BZNA/B90A/GPLA/GPPA-3/GPPA-4/MCLA/MCTA/MKYA/MKZA/MM7A/MNZA/MRMA/MZHA/MZJA Mainshaft To Converter Reactor (.077"Thick)(1.143"OD)(Teflon) 2002-11 (Also Fits BCLA/BZHA/BZKA-1/BZNA/B90A/GPLA/GPPA-3/GPPA-4/MCLA/MCTA/MKYA/MKZA/MM7A/MNZA/MRMA/MZHA/MZJA (# 181) Secondary Shaft To Oil Guide Collar (.077"Thick)(1.143"OD)(Teflon) 2002-11)	2-5	22814-PRP-003
160181AT	Use 50179AT	AR	

PART #	WASHERS & BEARINGS	QTY	REFERENCE #
160207A	Use 30206A	AR	
160208A	Use 30206A	AR	
30206A	Washer, BCLA/BZHA/BZJA/BZKA-1/BZNA/B90A/GPLA/GPPA-3/GPPA-4/MCLA/MCTA/MKYA/MKZA/MM7A/MNZA/MRMA/MZHA/MZJA/MZKA-5/M91A Secondary Shaft To Nut 2002-11 (Also Fits BCLA/BZHA/BZJA/BZKA-1/BZNA/B90A/GPLA/GPPA-3/GPPA-4/MCLA/MCTA/MKYA/MKZA/MM7A/MNZA/MRMA/MZHA/MZJA/MZKA-5/M91A Mainshaft # 207, & Countershaft # 208 2002-11)	1-3	23926-P24-J00
80209	Caged Needle Bearing, BCLA/BZHA/BZJA/BZKA-1/BZNA/B90A/GPLA/GPPA-3/GPPA-4/MCLA/MCTA/MKYA/MKZA/MM7A/MNZA/MRMA/MZHA/MZJA/MZKA-5/M91A Stator (Front)(1.040"OD) 2002-11	1	
50214A	Caged Needle Bearing, BCLA/BZHA/BZKA-1/BZNA/B90A/GPLA/GPPA-3/GPPA-4/MCLA/MCTA/MKYA/MKZA/MM7A/MNZA/MRMA/MZHA/MZJA Mainshaft To Converter Reactor (.695"Thick) (1.115"OD) 2002-11	1	91017-PZK-003
160217A	Use 30232A	AR	
30232A	Bearing, BCLA/BZHA/BZJA/BZKA-1/BZNA/B90A/GPLA/GPPA-3/GPPA-4/MCLA/MCTA/MKYA/MKZA/MM7A/MNZA/MRMA/MZHA/MZJA/MZKA-5/M91A # 217 4th/Reverse Gear (Rear) (.078"Thick)(1.800"OD) 2002-11	1	91018-PW7-A02
50217A	Thrust Bearing, BCLA/BZHA/BZKA-1/BZNA/B90A/GPLA/GPPA-3/GPPA-4/MCLA/MCTA/MKYA/MKZA/MM7A/MNZA/MRMA/MZHA/MZJA # 226 Mainshaft To 3rd Gear (2.790"OD, 2.270"ID) 2002-11 (Also Fits BCLA/BZHA/BZKA-1/BZNA/B90A/GPLA/GPPA-3/GPPA-4/MCLA/MCTA/MKYA/MKZA/MM7A/MNZA/MRMA/MZHA/MZJA # 232 5th Gear (Rear)(Mainshaft) 2002-11)	1-2	91026-PRP-003
160220A	Use 50229A	AR	
50229A	Caged Needle Bearing, BCLA/BZHA/BZKA-1/BZNA/B90A/GPLA/GPPA-3/GPPA-4/GPPA-4/MCLA/MCTA/MKYA/MKZA/MM7A/MNZA/MRMA/MZHA/MZJA # 220 4th/Reverse Gear To Mainshaft (1.535"Long)(1.545"OD) 2002-11	1	91107-PRP-003
160223A	Use 30226B		
30226B	Bearing, BCLA/BZHA/BZJA/BZKA-1/BZNA/B90A/GPLA/GPPA-3/GPPA-4/GPPA-4/MCLA/MCTA/MKYA/MKZA/MM7A/MNZA/MRMA/MZHA/MZJA/MZKA-5/M91A # 223 Collar To 4th/Reverse Gear (.097"Thick)(2.094"OD) 2002-11	1	91023-P7Z-003
50225A	Collar, BCLA/BZHA/BZKA-1/BZNA/B90A/GPLA/GPPA-3/GPPA-4/MCLA/MCTAMKYA/MKZA/MM7A/MNZA/MRMA/MZHA/MZJA 4th/5th Drum To 4th Gear (Mainshaft)(2.615"Long)(1.060"ID) 2002-11	1	90501-PRP-000
50220A	Caged Needle Bearing, BCLA/BZHA/BZKA-1/BZNA/B90A/GPLA/GPPA-3/GPPA-4/MCLA/MCTA/MKYA/MKZA/MM7A/MNZA/MRMA/MZHA/MZJA # 229 Mainshaft To 5th Gear (.697"Thick) (2.215"OD) 2002-11	1	91109-PRP-003
50224AA	Washer, BCLA/BZHA/BZKA-1/BZNA/B90A/GPLA/GPPA-3/GPPA-4/MCLA/MCTA/MKYA/MKZA/MM7A/MNZA/MRMA/MZHA/MZJA 5th Gear (Mainshaft) To 4th/5th Drum # 233 (.175"Thick) (2.765"OD) 2002-11	1	90414-RCT-000
50224AB	Washer, BCLA/BZHA/BZKA-1/BZNA/B90A/GPLA/GPPA-3/GPPA-4/MCLA/MCTA/MKYA/MKZA/MM7A/MNZA/MRMA/MZHA/MZJA 5th Gear (Mainshaft) To 4th/5th Drum # 233 (.176"Thick) (2.765"OD) 2002-11	1	90415-RCT-000
50224AC	Washer, BCLA/BZHA/BZKA-1/BZNA/B90A/GPLA/GPPA-3/GPPA-4/MCLA/MCTA/MKYA/MKZA/MM7A/MNZA/MRMA/MZHA/MZJA 5th Gear (Mainshaft) To 4th/5th Drum # 233 (.177"Thick) (2.765"OD) 2002-11	1	90416-RCT-000
50224AD	Washer, BCLA/BZHA/BZKA-1/BZNA/B90A/GPLA/GPPA-3/GPPA-4/MCLA/MCTA/MKYA/MKZA/MM7A/MNZA/MRMA/MZHA/MZJA 5th Gear (Mainshaft) To 4th/5th Drum # 233 (.216"Thick) (2.765"OD) 2002-11	1	90418-RCT-000

© Whatever It Takes Transmission Parts. Inc.

PART #	WASHERS & BEARINGS (Continued)	QTY	REFERENCE #
50224AE	Washer, BCLA/BZHA/BZKA-1/BZNA/B90A/GPLA/GPPA-3/GPPA-4/MCLA/MCTA/MKYA/MKZA/ MM7A/MNZA/MRMA/MZHA/MZJA 5th Gear (Mainshaft) To 4th/5th Drum # 233 (.219"Thick) (2.765"OD) 2002-11	1	90419-RCT-000
50224AF	Washer, BCLA/BZHA/BZKA-1/BZNA/B90A/GPLA/GPPA-3/GPPA-4/MCLA/MCTA/MKYA/MKZA/ MM7A/MNZA/MRMA/MZHA/MZJA 5th Gear (Mainshaft) To 4th/5th Drum # 233 (.255"Thick) (2.765"OD) 2002-11	1	90417-PRP-010
160235A	Ball Bearing, BCLA/BZHA/BZKA-1/BZNA/B90A/GPLA/GPPA-3/GPPA-4/MCLA/MCTA/MKYA/ MKZA/MM7A/MNZA/MRMA/MZHA/MZJA Mainshaft To Case (.710"Thick)(3.330"OD)(1.060"ID) (8 Balls)(Cast # 27BCS11) 2002-11	1	91002-RCR-026
50238A	Ball Bearing, BCLA/BZHA/BZKA-1/BZNA/B90A/GPLA/GPPA-3/GPPA-4/MCLA/MCTA/MKYA/ MKZA/MM7A/MNZA/MRMA/MZHA/MZJA Bell Housing To Secondary Shaft (Cast # TA-SX06C51NV1) 2002-11	1	91005-PRP-003
160241A	Caged Needle Bearing, BCLA/BZHA/BZKA-1/BZNA/B90A/GPLA/GPPA-3/GPPA-4/MCLA/MCTA/ MKYA/MKZA/MM7A/MNZA/MRMA/MZHA/MZJA 1st Gear To Secondary Shaft (.615"Thick) (1.827"OD) 2002-11	1	91105-PRP-005
160242A	Use 50242A	1	
50242A	Thrust Bearing, BCLA/BZHA/BZKA-1/BZNA/B90A/GPLA/GPPA-3/GPPA-4/MCLA/MCTA/MKYA/ MKZA/MM7A/MNZA/MRMA/MZHA/MZJA # 242, 250, 253 (.099"Thick)(2.338"OD)(1.842"ID) 2002-11 (Also Fits BCLA/BZHA/BZKA-1/BZNA/B90A/GPLA/GPPA-3/GPPA-4/MCLA/MCTA/ MKYA/MKZA/MM7A/MNZA/MRMA/MZHA/MZJA # 250 2nd Gear To Secondary Shaft & # 253 2nd Drum To 2nd Gear 2002-11)	1-3	91022-PRP-003
160243A	Use 40232A	AR	
40232A	Bearing, BCLA/BZHA/BZKA-1/BZNA/B90A/GPLA/GPPA-3/GPPA-4/MCLA/MCTA/MKYA/MKZA/ MM7A/MNZA/MRMA/MZHA/MZJA # 243 1st Gear To 1st/3rd Drum (.099"Thick)(2.065"OD) (1.580"ID) 2002-11	1	91021-PRP-013
160244A	Use 50244AA - 50244AF	AR	
50244AA	Washer, BCLA/BZHA/BZKA-1/BZNA/B90A/GPLA/GPPA-3/GPPA-4/MCLA/MCTA/MKYA/MKZA/ MM7A/MNZA/MRMA/MZHA/MZJA 1st Gear To 1st/3rd Drum (.189"Thick)(2.030"OD) 2002-11	1	90503-RCT-000
50244AB	Washer, BCLA/BZHA/BZKA-1/BZNA/B90A/GPLA/GPPA-3/GPPA-4/MCLA/MCTA/MKYA/MKZA/ MM7A/MNZA/MRMA/MZHA/MZJA 1st Gear To 1st/3rd Drum (.191"Thick)(2.030"OD) 2002-11	1	90504-RCT-000
50244AC	Washer, BCLA/BZHA/BZKA-1/BZNA/B90A/GPLA/GPPA-3/GPPA-4/MCLA/MCTA/MKYA/MKZA/ MM7A/MNZA/MRMA/MZHA/MZJA 1st Gear To 1st/3rd Drum (.193"Thick)(2.030"OD) 2002-11	1	90505-PRP-000
50244AD	Washer, BCLA/BZHA/BZKA-1/BZNA/B90A/GPLA/GPPA-3/GPPA-4/MCLA/MCTA/MKYA/MKZA/ MM7A/MNZA/MRMA/MZHA/MZJA 1st Gear To 1st/3rd Drum (.195"Thick)(2.030"OD) 2002-11	1	90506-RCT-000
50244AE	Washer, BCLA/BZHA/BZKA-1/BZNA/B90A/GPLA/GPPA-3/GPPA-4/MCLA/MCTA/MKYA/MKZA/ MM7A/MNZA/MRMA/MZHA/MZJA 1st Gear To 1st/3rd Drum (.197"Thick)(2.030"OD) 2002-11	1	90507-PRP-000
50244AF	Washer, BCLA/BZHA/BZKA-1/BZNA/B90A/GPLA/GPPA-3/GPPA-4/MCLA/MCTA/MKYA/MKZA/ MM7A/MNZA/MRMA/MZHA/MZJA 1st Gear To 1st/3rd Drum (.199"Thick)(2.030"OD) 2002-11	1	90508-PRP-000
160250A	Use 50242A	AR	
160251A	Use 50251A	AR	
50251A	Caged Needle Bearing, BCLA/BZHA/BZKA-1/BZNA/B90A/GPLA/GPPA-3/GPPA-4/MCLA/MCTA/ MKYA/MKZA/MM7A/MNZA/MRMA/MZHA/MZJA 2nd Gear To Secondary Shaft (.790"Thick) (1.783"OD) 2002-11	1	91106-PRP-025
160252A	Use 50252AA - 50252AV	AR	
50252AA	Washer, BCLA/BZHA/BZKA-1/BZNA/B90A/GPLA/GPPA-3/GPPA-4/MCLA/MCTA/MKYA/MKZA/ MM7A/MNZA/MRMA/MZHA/MZJA 2nd Drum To 2nd Gear (.153"Thick)(2.285"OD) 2002-11	1	90511-PRP-010
50252AB	Washer, BCLA/BZHA/BZKA-1/BZNA/B90A/GPLA/GPPA-3/GPPA-4/MCLA/MCTA/MKYA/MKZA/ MM7A/MNZA/MRMA/MZHA/MZJA 2nd Drum To 2nd Gear (.154"Thick)(2.285"OD) 2002-11	1	90512-PRP-010
50252AC	Washer, BCLA/BZHA/BZKA-1/BZNA/B90A/GPLA/GPPA-3/GPPA-4/MCLA/MCTA/MKYA/MKZA/ MM7A/MNZA/MRMA/MZHA/MZJA 2nd Drum To 2nd Gear (.155"Thick)(2.285"OD) 2002-11	1	90513-PRP-010
50252AD	Washer, BCLA/BZHA/BZKA-1/BZNA/B90A/GPLA/GPPA-3/GPPA-4/MCLA/MCTA/MKYA/MKZA/ MM7A/MNZA/MRMA/MZHA/MZJA 2nd Drum To 2nd Gear (.156"Thick)(2.285"OD) 2002-11	1	90514-PRP-010
50252AE	Washer, BCLA/BZHA/BZKA-1/BZNA/B90A/GPLA/GPPA-3/GPPA-4/MCLA/MCTA/MKYA/MKZA/ MM7A/MNZA/MRMA/MZHA/MZJA 2nd Drum To 2nd Gear (.157"Thick)(2.285"OD) 2002-11	1	90515-PRP-010
50252AF	Washer, BCLA/BZHA/BZKA-1/BZNA/B90A/GPLA/GPPA-3/GPPA-4/MCLA/MCTA/MKYA/MKZA/ MM7A/MNZA/MRMA/MZHA/MZJA 2nd Drum To 2nd Gear (.158"Thick)(2.285"OD) 2002-11	1	90516-PRP-010
50252AG	Washer, BCLA/BZHA/BZKA-1/BZNA/B90A/GPLA/GPPA-3/GPPA-4/MCLA/MCTA/MKYA/MKZA/ MM7A/MNZA/MRMA/MZHA/MZJA 2nd Drum To 2nd Gear (.159"Thick)(2.285"OD) 2002-11	1	90517-PRP-010
50252AH	Washer, BCLA/BZHA/BZKA-1/BZNA/B90A/GPLA/GPPA-3/GPPA-4/MCLA/MCTA/MKYA/MKZA/ MM7A/MNZA/MRMA/MZHA/MZJA 2nd Drum To 2nd Gear (.160"Thick)(2.285"OD) 2002-11	1	90518-PRP-010
50252AJ	Washer, BCLA/BZHA/BZKA-1/BZNA/B90A/GPLA/GPPA-3/GPPA-4/MCLA/MCTA/MKYA/MKZA/ MM7A/MNZA/MRMA/MZHA/MZJA 2nd Drum To 2nd Gear (.161"Thick)(2.285"OD) 2002-11	1	90519-PRP-010
50252AK	Washer, BCLA/BZHA/BZKA-1/BZNA/B90A/GPLA/GPPA-3/GPPA-4/MCLA/MCTA/MKYA/MKZA/ MM7A/MNZA/MRMA/MZHA/MZJA 2nd Drum To 2nd Gear (.162"Thick)(2.285"OD) 2002-11	1	90520-PRP-010
50252AL	Washer, BCLA/BZHA/BZKA-1/BZNA/B90A/GPLA/GPPA-3/GPPA-4/MCLA/MCTA/MKYA/MKZA/ MM7A/MNZA/MRMA/MZHA/MZJA 2nd Drum To 2nd Gear (.163"Thick)(2.285"OD) 2002-11	1	90521-PRP-010
50252AM	Washer, BCLA/BZHA/BZKA-1/BZNA/B90A/GPLA/GPPA-3/GPPA-4/MCLA/MCTA/MKYA/MKZA/ MM7A/MNZA/MRMA/MZHA/MZJA 2nd Drum To 2nd Gear (.164"Thick)(2.285"OD) 2002-11	1	90522-PRP-010

© Whatever It Takes Transmission Parts. Inc.

50252AN	Washer, BCLA/BZHA/BZKA-1/BZNA/B90A/GPLA/GPPA-3/GPPA-4/MCLA/MCTA/MKYA/MKZA/MM7A/MNZA/MRMA/MZHA/MZJA 2nd Drum To 2nd Gear (.165"Thick)(2.285"OD) 2002-11	1		90523-RP-000
50252AP	Washer, BCLA/BZHA/BZKA-1/BZNA/B90A/GPLA/GPPA-3/GPPA-4/MCLA/MCTA/MKYA/MKZA/MM7A/MNZA/MRMA/MZHA/MZJA 2nd Drum To 2nd Gear (.166"Thick)(2.285"OD) 2002-11	1		90524-PRP-000
50252AQ	Washer, BCLA/BZHA/BZKA-1/BZNA/B90A/GPLA/GPPA-3/GPPA-4/MCLA/MCTA/MKYA/MKZA/MM7A/MNZA/MRMA/MZHA/MZJA 2nd Drum To 2nd Gear (.167"Thick)(2.285"OD) 2002-11	1		90525-PRP-000
50252AR	Washer, BCLA/BZHA/BZKA-1/BZNA/B90A/GPLA/GPPA-3/GPPA-4/MCLA/MCTA/MKYA/MKZA/MM7A/MNZA/MRMA/MZHA/MZJA 2nd Drum To 2nd Gear (.168"Thick)(2.285"OD) 2002-11	1		90526-PRP-000
50252AS	Washer, BCLA/BZHA/BZKA-1/BZNA/B90A/GPLA/GPPA-3/GPPA-4/MCLA/MCTA/MKYA/MKZA/MM7A/MNZA/MRMA/MZHA/MZJA 2nd Drum To 2nd Gear (.169"Thick)(2.285"OD) 2002-11	1		90527-PRP-000
50252AT	Washer, BCLA/BZHA/BZKA-1/BZNA/B90A/GPLA/GPPA-3/GPPA-4/MCLA/MCTA/MKYA/MKZA/MM7A/MNZA/MRMA/MZHA/MZJA 2nd Drum To 2nd Gear (.170"Thick)(2.285"OD) 2002-11	1		90528-PRP-000
50252AU	Washer, BCLA/BZHA/BZKA-1/BZNA/B90A/GPLA/GPPA-3/GPPA-4/MCLA/MCTA/MKYA/MKZA/.. MM7A/MNZA/MRMA/MZHA/MZJA 2nd Drum To 2nd Gear (.171"Thick)(2.285"OD) 2002-11	1		90529-PRP-000
50252AV	Washer, BCLA/BZHA/BZKA-1/BZNA/B90A/GPLA/GPPA-3/GPPA-4/MCLA/MCTA/MKYA/MKZA/MM7A/MNZA/MRMA/MZHA/MZJA 2nd Drum To 2nd Gear (.172"Thick)(2.285"OD) 2002-11	1		90530-PRP-000
160253A	Use 50242A.	AR		
160254A	Roller Bearing, BCLA/BZHA/BZKA-1/BZNA/B90A/MCLA/MCTA/MM7A/MNZA/MZHA/MZJA Bell Housing To Countershaft (.780"Thick)(2.520"OD)(12 Rollers) 2003-11	1		91102-PPV-003
160254C	Roller Bearing, GPLA/GPPA-3/GPPA-4/MKYA/MKZA/MRMA Bell Housing To Countershaft (.765"Thick)(2.520"OD)(12 Rollers) 2002-06	1		91102-RFK-003
160267A	Collar, BCLA/MCTA/MRMA 3rd Gear To 5th Gear (Countershaft)(2.275"Thick)(1.615"OD)(1.460"ID) 2003-08	1		90441-PRP-010
160267D	Collar, BZHA/BZKA-1/BZNA/B90A/GPLA/GPPA-3/GPPA-4/MCLA/MKYA/MKZA/MM7A/MNZA/MZHA/MZJA 3rd Gear To 5th Gear (Countershaft)(2.138"Thick)(1.165"OD)(1.460"ID) 2003-11	1		90441-RFK-010
50269A	Collar, BCLA/BZHA/BZKA-1/BZNA/B90A/GPLA/GPPA-3/GPPA-4/MCLA/MCTA/MKYA/MKZA/MM7A/MNZA/MRMA/MZHA/MZJA Holds Horse Shoe Clips To Countershaft (.305"Thick)(1.845"OD)(1.380"ID) 2002-11	1		90445-PPV-000
30271A	Caged Needle Bearing, BCLA/BZHA/BZKA-1/BZNA/B90A/GPLAGPPA-3/GPPA-4/MCLA/MCTA/MKYA/MKZA/MM7A/MNZA/MRMA/MZHA/MZJA 4th Gear (Countershaft)(Inner)(1.007"Thick) 2002-11	1		91028-POZ-013
50273A	Caged Needle Bearing, BCLA/BZHA/BZKA-1/BZNA/B90A/GPLA/GPPA-3/GPPA-4/MCLA/MCTA/MKYA/MKZA/MM7A/MNZA/MRMA/MZHA/MZJA Rev Gear (Countershaft)(Inner)(.560"Thick)(1.780"OD) 2002-11	1		91024-PRP-004
160274A	Ball Bearing, BCLA/BZHA/BZKA-1/BZNA/B90A/GPLA/GPPA-3/GPPA-4/MCLA/MCTA/MKYA/MKZA/MM7A/MNZA/MRMA/MZHA/MZJA Countershaft To Case (3.150"OD)(1.215"ID)(9 Balls) (Cast # NSK HFT B31-28) 2002-11	1		91003-RFK-025
160280A	Bearing, BCLA/BZHA/BZKA-1/BZNA/B90A/GPLA/GPPA-3/GPPA-4/MCLA/MCTA/MKYA/MKZA/MM7A/MNZA/MRMA/MZHA/MZJA Idler Gear To 3rd Gear (Secondary Shaft)(.099"Thick)(2.235"OD)(1.463"ID) 2002-11 (Also Fits BCLA/BZHA/BZKA-1/BZNA/B90A/GPLA/GPPA-3/GPPA-4/MCLA/MCTA/MKYA/MKZA/MM7A/MNZA/MRMA/MZHA/MZJA # 281 2002-11)	1-2		91027-PRP-003
160281A	Use 160280A.	AR		
160282A	Collar, BCLA/BZHA/BZKA-1/BZNA/B90A/GPLA/GPPA-3/GPPA-4/MCLA/MCTA/MKYA/MKZA/MM7A/MNZA/MRMA/MZHA/MZJA 3rd Gear To Secondary Shaft (.208"Thick Flange)(1.730"Long)(W/12 Inner Splines) 2002-11	1		90443-PRP-000
50283A	Caged Needle Bearing, BCLA/BZHA/BZKA-1/BZNA/B90A/GPLA/GPPA-3/GPPA-4/MCLA/MCTA/MKYA/MKZA/MM7A/MNZA/MRMA/MZHA/MZJA Rev Idler Gear To Shaft (.615"Thick)(.750"OD) 2002-11	1		91025-POX-003
160285A	Bearing, BCLA/BZHA/BZKA-1/BZNA/B90A/GPLA/GPPA-3/GPPA-4/MCLA/MCTA/MKYA/MKZA/MM7A/MRMA/MZHA/MZJA 3rd Gear (Inner) To Secondary Shaft (1.310"Thick)(1.670"OD) 2002-11	1		91028-PRP-003
160286A	Ball Bearing, BCLA/BZHA/BZKA-1/BZNA/B90A/GPLA/GPPA-3/GPPA-4/MCLA/MCTA/MKYA/MKZA/MM7A/MNZA/MRMA/MZHA/MZJA Secondary Shaft To Case (.570"Thick)(2.165"OD)(1.052"ID)(9 Balls)(Cast # S7K LE3) 2002-11	1		91004-RCR-003
160288B	Cup Race, BZHA/BZKA-1/BZNA/MCLA/MNZA/MZHA/MZJA Differential To Case (.655"Thick)(3.002"OD)(Cast # NTN ECO CR-08818-1) 2003-11	1		
50288A	Cup Race, BCLA/B90A/GPLA/GPPA-3/GPPA-4/MCTA/MKYA/MKZA/MM7A/MRMA Differential To Case (.540"Thick)(3.003"OD)(Cast # NTN ECO CR-08A78-1) 2002-11	1		
160289B	Cone Bearing, BZHA/BZKA-1/BZNA/MCLA/MNZA/MZHA/MZJA Differential To Case (21 Rollers)(1.572"ID)(Cast # NTN ECO CR-08822-1) 2003-11	1		
50289A	Cone Bearing, BCLA/B90A/GPLA/GPPA-3/GPPA-4/MCTA/MKYA/MKZA/MM7A/MRMA Differential To Case (1.575"ID)(21 Roller)(Cast # NTN ECO CR-08A78-1 Or -2) 2002-11	1		
50290AA	Shim, BCLA/BZHA/BZKA-1/BZNA/B90A/GPLA/GPPA-3/GPPA-4/MCLA/MCTA/MKYA/MKZA/MM7A/MNZA/MRMA/MZHA/MZJA Differential Cup Race To Case (.061"Thick)(2.980"OD)(2.680"ID) 2002-11	1		41428-PRP-000
50290AB	Shim, BCLA/BZHA/BZKA-1/BZNA/B90A/GPLA/GPPA-3/GPPA-4/MCLA/MCTA/MKYA/MKZA/MM7A/MNZA/MRMA/MZHA/MZJA Differential Cup Race To Case (.063"Thick)(2.980"OD)(2.680"ID) 2002-11	1		41429-PRP-000

© Whatever It Takes Transmission Parts. Inc.

PART #	WASHERS & BEARINGS (Continued)	QTY	REFERENCE #
50290AC	Shim, BCLA/BZHA/BZKA-1/BZNA/B90A/GPLA/GPPA-3/GPPA-4/MCLA/MCTA/MKYA/MKZA/ MM7A/MNZA/MRMA/MZHA/MZJA Differential Cup Race To Case (.065"Thick)(2.980"OD) (2.680"ID) 2002-11	1	41430-PRP-000
50290AD	Shim, BCLA/BZHA/BZKA-1/BZNA/B90A/GPLA/GPPA-3/GPPA-4/MCLA/MCTA/MKYA/MKZA/ MM7A/MNZA/MRMA/MZHA/MZJA Differential Cup Race To Case (.067"Thick)(2.980"OD) (2.680"ID) 2002-11	1	41431-PRP-000
50290AE	Shim, BCLA/BZHA/BZKA-1/BZNA/B90A/GPLA/GPPA-3/GPPA-4/MCLA/MCTA/MKYA/MKZA/ MM7A/MNZA/MRMA/MZHA/MZJA Differential Cup Race To Case (.069"Thick)(2.980"OD) (2.680"ID) 2002-11	1	41432-PRP-000
50290AF	Shim, BCLA/BZHA/BZKA-1/BZNA/B90A/GPLA/GPPA-3/GPPA-4/MCLA/MCTA/MKYA/MKZA/ MM7A/MNZA/MRMA/MZHA/MZJA Differential Cup Race To Case (.071"Thick)(2.980"OD) (2.680"ID) 2002-11	1	41433-PRP-000
50290AG	Shim, BCLA/BZHA/BZKA-1/BZNA/B90A/GPLA/GPPA-3/GPPA-4/MCLA/MCTA/MKYA/MKZA/ MM7A/MNZA/MRMA/MZHA/MZJA Differential Cup Race To Case (.073"Thick)(2.980"OD) (2.680"ID) 2002-11	1	41434-PRP-000
50290AH	Shim, BCLA/BZHA/BZKA-1/BZNA/B90A/GPLA/GPPA-3/GPPA-4/MCLA/MCTA/MKYA/MKZA/ MM7A/MNZA/MRMA/MZHA/MZJA Differential Cup Race To Case (.075"Thick)(2.980"OD) (2.680"ID) 2002-11	1	41435-PRP-000
50290AJ	Shim, BCLA/BZHA/BZKA-1/BZNA/B90A/GPLA/GPPA-3/GPPA-4/MCLA/MCTA/MKYA/MKZA/ MM7A/MNZA/MRMA/MZHA/MZJA Differential Cup Race To Case (.077"Thick)(2.980"OD) (2.680"ID) 2002-11	1	41436-PRP-000
50290AK	Shim, BCLA/BZHA/BZKA-1/BZNA/B90A/GPLA/GPPA-3/GPPA-4/MCLA/MCTA/MKYA/MKZA/ MM7A/MNZA/MRMA/MZHA/MZJA Differential Cup Race To Case (.079"Thick)(2.980"OD) (2.680"ID) 2002-11	1	41437-PRP-000
50290AL	Shim, BCLA/BZHA/BZKA-1/BZNA/B90A/GPLA/GPPA-3/GPPA-4/MCLA/MCTA/MKYA/MKZA/ MM7A/MNZA/MRMA/MZHA/MZJA Differential Cup Race To Case (.081"Thick)(2.980"OD) (2.680"ID) 2002-11	1	41438-PX4-700
50290AM	Shim, BCLA/BZHA/BZKA-1/BZNA/B90A/GPLA/GPPA-3/GPPA-4/MCLA/MCTA/MKYA/MKZA/ MM7A/MNZA/MRMA/MZHA/MZJA Differential Cup Race To Case (.083"Thick)(2.980"OD) (2.680"ID) 2002-11	1	41439-PX4-700
50290AN	Shim, BCLA/BZHA/BZKA-1/BZNA/B90A/GPLA/GPPA-3/GPPA-4/MCLA/MCTA/MKYA/MKZA/ MM7A/MNZA/MRMA/MZHA/MZJA Differential Cup Race To Case (.085"Thick)(2.980"OD) (2.680"ID) 2002-11	1	41440-PX4-700
50290AP	Shim, BCLA/BZHA/BZKA-1/BZNA/B90A/GPLA/GPPA-3/GPPA-4/MCLA/MCTA/MKYA/MKZA/ MM7A/MNZA/MRMA/MZHA/MZJA Differential Cup Race To Case (.087"Thick)(2.980"OD) (2.680"ID) 2002-11	1	41441-PK4-000
50290AQ	Shim, BCLA/BZHA/BZKA-1/BZNA/B90A/GPLA/GPPA-3/GPPA-4/MCLA/MCTA/MKYA/MKZA/ MM7A/MNZA/MRMA/MZHA/MZJA Differential Cup Race To Case (.089"Thick)(2.980"OD) (2.680"ID) 2002-11	1	41442-PK4-000
50290AR	Shim, BCLA/BZHA/BZKA-1/BZNA/B90A/GPLA/GPPA-3/GPPA-4/MCLA/MCTA/MKYA/MKZA/ MM7A/MNZA/MRMA/MZHA/MZJA Differential Cup Race To Case (.091"Thick)(2.980"OD) (2.680"ID) 2002-11	1	41443-PK4-000
50290AS	Shim, BCLA/BZHA/BZKA-1/BZNA/B90A/GPLA/GPPA-3/GPPA-4/MCLA/MCTA/MKYA/MKZA/ MM7A/MNZA/MRMA/MZHA/MZJA Differential Cup Race To Case (.093"Thick)(2.980"OD) (2.680"ID) 2002-11	1	41444-PK4-000
50290AT	Shim, BCLA/BZHA/BZKA-1/BZNA/B90A/GPLA/GPPA-3/GPPA-4/MCLA/MCTA/MKYA/MKZA/ MM7A/MNZA/MRMA/MZHA/MZJA Differential Cup Race To Case (.095"Thick)(2.980"OD) (2.680"ID) 2002-11	1	41445-PK4-000
50290AU	Shim, BCLA/BZHA/BZKA-1/BZNA/B90A/GPLA/GPPA-3/GPPA-4/MCLA/MCTA/MKYA/MKZA/ MM7A/MNZA/MRMA/MZHA/MZJA Differential Cup Race To Case (.097"Thick)(2.980"OD) (2.680"ID) 2002-11	1	41446-PK4-000
50290AV	Shim, BCLA/BZHA/BZKA-1/BZNA/B90A/GPLA/GPPA-3/GPPA-4/MCLA/MCTA/MKYA/MKZA/ MM7A/MNZA/MRMA/MZHA/MZJA Differential Cup Race To Case (.099"Thick)(2.980"OD) (2.680"ID) 2002-11	1	41447-PK4-000
50290AW	Shim, BCLA/BZHA/BZKA-1/BZNA/B90A/GPLA/GPPA-3/GPPA-4/MCLA/MCTA/MKYA/MKZA/ MM7A/MNZA/MRMA/MZHA/MZJA Differential Cup Race To Case (.101"Thick)(2.980"OD) (2.680"ID) 2002-11	1	41448-PK4-000
50290AX	Shim, BCLA/BZHA/BZKA-1/BZNA/B90A/GPLA/GPPA-3/GPPA-4/MCLA/MCTA/MKYA/MKZA/ MM7A/MNZA/MRMA/MZHA/MZJA Differential Cup Race To Case (.103"Thick)(2.980"OD) (2.680"ID) 2002-11	1	41449-PK4-000
50290AY	Shim, BCLA/BZHA/BZKA-1/BZNA/B90A/GPLA/GPPA-3/GPPA-4/MCLA/MCTA/MKYA/MKZA/ MM7A/MNZA/MRMA/MZHA/MZJA Differential Cup Race To Case (.105"Thick)(2.980"OD) (2.680"ID) 2002-11	1	41450-PK4-000
50290AZ	Shim, BCLA/BZHA/BZKA-1/BZNA/B90A/GPLA/GPPA-3/GPPA-4/MCLA/MCTA/MKYA/MKZA/ MM7A/MNZA/MRMA/MZHA/MZJA Differential Cup Race To Case (.107"Thick)(2.980"OD) (2.680"ID) 2002-11	1	41451-PK4-000

© Whatever It Takes Transmission Parts. Inc.

50290AZA.....Shim, BCLA/BZHA/BZKA-1/BZNA/B90A/GPLA/GPPA-3/GPPA-4/MCLA/MCTA/MKYA/MKZA/ MM7A/MNZA/MRMA/MZHA/MZJA Differential Cup Race To Case (.109"Thick)(2.980"OD) (2.680"ID) 2002-11 ..... 1 ..... 41452-PK4-000

50290AZB.....Shim, BCLA/BZHA/BZKA-1/BZNA/B90A/GPLA/GPPA-3/GPPA-4/MCLA/MCTA/MKYA/MKZA/ MM7A/MNZA/MRMA/MZHA/MZJA Differential Cup Race To Case (.111"Thick)(2.980"OD) (2.680"ID) 2002-11 ..... 1 ..... 41453-PK4-000

50290AZC .....Shim, BCLA/BZHA/BZKA-1/BZNA/B90A/GPLA/GPPA-3/GPPA-4/MCLA/MCTA/MKYA/MKZA/ MM7A/MNZA/MRMA/MZHA/MZJA Differential Cup Race To Case (.113"Thick)(2.980"OD) (2.680"ID) 2002-11 ..... 1 ..... 41454-PK4-000

50290AZD .....Shim, BCLA/BZHA/BZKA-1/BZNA/B90A/GPLA/GPPA-3/GPPA-4/MCLA/MCTA/MKYA/MKZA/ MM7A/MNZA/MRMA/MZHA/MZJA Differential Cup Race To Case (.115"Thick)(2.980"OD) (2.680"ID) 2002-11 ..... 1 ..... 41455-PK4-000

50290AZE.....Shim, BCLA/BZHA/BZKA-1/BZNA/B90A/GPLA/GPPA-3/GPPA-4/MCLA/MCTA/MKYA/MKZA/ MM7A/MNZA/MRMA/MZHA/MZJA Differential Cup Race To Case (.117"Thick)(2.980"OD) (2.680"ID) 2002-11 ..... 1 ..... 41456-PK4-000

50290AZF.....Shim, BCLA/BZHA/BZKA-1/BZNA/B90A/GPLA/GPPA-3/GPPA-4/MCLA/MCTA/MKYA/MKZA/ MM7A/MNZA/MRMA/MZHA/MZJA Differential Cup Race To Case (.119"Thick)(2.980"OD) (2.680"ID) 2002-11 ..... 1 ..... 41457-PK4-000

50290AZG .....Shim, BCLA/BZHA/BZKA-1/BZNA/B90A/GPLA/GPPA-3/GPPA-4/MCLA/MCTA/MKYA/MKZA/ MM7A/MNZA/MRMA/MZHA/MZJA Differential Cup Race To Case (.121"Thick)(2.980"OD) (2.680"ID) 2002-11 ..... 1 ..... 41458-PK4-000

160291A .....Cup Race, BCLA/B90A/GPLA/GPPA-3/GPPA-4/MCTA/MKYA/MKZA/MM7A/MRMA Differential To Bell Housing (3.150"OD)(Cast # ECO CR08A97-1) 2002-11 ..... 1 ..... 91121-RFK-013

160291D .....Cup Race, BZHA/BZKA-1/BZNA/MCLA/MNZA/MZHA/MZJA Differential To Bell Housing (3.150"OD)(Cast # ECO CR08817-1) 2003-11 ..... 1 ..... 91121-RZH-003

160292A .....Cone Bearing, BCLA/B90A/GPLA/GPPA-3/GPPA-4/MCTA/MKYA/MKZA/MM7A/MRMA Differential To Bell Housing (1.570"ID)(20 Rollers)(Cast #ECO CR08802-1) 2002-11 ..... 1 ..... 91121-RFK-013

160292D .....Cone Bearing, BZHA/BZKA-1/BZNA/MCLA/MNZA/MZHA/MZJA Differential To Bell Housing (1.570"ID)(20 Rollers)(Cast # ECO CR08817-2) 2003-11 ..... 1 ..... 91121-RZH-003

40298A .....Ball Bearing, BCLA/BZHA/BZKA-1/BZNA/B90A/GPLA/GPPA-3/GPPA-4/MCLA/MCTA/MKYA/ MKZA/MM7A/MNZA/MRMA/MZHA/MZJA Shift Rod To Case (.235"Thick)(.945"OD)(.472"ID) 2002-11 ..... 1 ..... 91010-RJF-005

50299-1A.....Double Ball Bearing, BCLA/BZHA/BZKA-1/BZNA/B90A/GPLA/GPPA-3/GPPA-4/MCLA/MCTA/ MKYA/MKZA/MM7A/MNZA/MRMA/MZHA/MZJA Idler Shaft To Case (.943"Thick)(1.890"OD) (.785"ID)(Cast # 20BG04S6N) 2002-11 ..... 1 ..... 91006-PRP-026

50299A .....Roller Bearing, BCLA/BZHA/BZKA-1/BZNA/B90A/GPLA/GPPA-3/GPPA-4/MCLA/MCTA/MKYA/ MKZA/MM7A/MNZA/MRMA/MZHA/MZJA Idler Gear To Idler Shaft (.727"Thick)(2.165"OD) (11 Rollers)(Cast # HL-BE-NK 32X55X18.5PX1) 2002-11 ..... 1 ..... 91103-RCL-023

PART #	GASKETS AND RUBBER COMPONENTS	QTY	REFERENCE #

160305A .....Gasket, BCLA/MCLA 2003-04, MKYA/GPLA/MKZA/GPPA 2005-06, M (Left Side Cover) CTA 2004-08, BZKA/MZKA 2003-06, MCVA/MRVA 2002-04 ..... 1 ..... 21811-PRP-010

160305C .....Gasket, MRMA Only 2002-06 Rear Cover (Left Side) ..... 1 .....

160318A .....Gasket, BCLA/MCLA 2003-07, MKYA/GPLA 2005-06, MCTA 2004-08, BZKA/MZKA (2WD) 2003-06, MCVA/MRVA (2WD) 2002-04 (19 Bolts) MKZA/GPPA (2WD ONLY) 2005-06 Bell To Case (Converter Side) ..... 1 ..... 21812-PRP-030

160318B .....Gasket, MKZA/GPPA (2005-07) BZKA/MZKA (4WD Only 2003-06) MCVA/MRVA (4WD Only 2002-04) Case To Bell (20 Bolts) ..... 1 .....

50325AK.....Gasket Kit, BCLA/BZHA/BZJA/BZKA-1/BZNA/ B90A/GPLA/GPPA-3/MCLA/MCTA/MKYA/MKZA/ MM7A/MNZA/MRMA/MZHA/ MZJA Linear "B" Solenoid W/Housing #431A (Contains: 2 Gaskets & 6 O-Rings) 2002-11 ..... 1 .....

PART #	ELECTRICAL COMPONENTS	QTY	REFERENCE #

160410A .....Switch, BCLA/BZHA/BZKA-1/BZNA/B90A/GPLA/GPPA-3/GPPA-4/MCLA/MCTA/MKYA/MKZA/ MM7A/MNZA/MRMA/MZHA/MZJA Neutral Safety (10 Blade Connector) 2002-11 ..... 1 ..... 28900-RCR-003

160411A.....Switch, BCLA/BZHA/BZJA/BZKA-1/BZNA/GPLA/GPPA-3/GPPA-4/MCLA/MCTA/MKYA/MKZA/ MNZA/MRMA/MZHA/MZJA Pressure (1 Blade, Blue/Green Connector)(1.645"Long)(Screws Into Front Of Rear Cover) 2002-11 (Also Fits BZKA-5/6/7/8/MCVA/MRVA/MZKA-1/2/3/4 #412 Green Connector On Bell Housing)(Also Fits BAXA/B6VA/MAXA/M6HA #411 Green Connector On Bell Housing) ..... 1 ..... 28600-PRP-004

160411E .....Switch, BK3A/BK4A/BT3A/BYKA/ BY9A/B8BA/B8CA/B8SA/B8TA/MNZA/MRMA/MZHA/MZJA/ B87A/B70A/B90A/B97A/MMGA/MMHA/MM2A/MM7A/MR9A/MT4A/MV2A/M7PA/M9RA/PJ7A/ PJ8A/PN3A/PN4A/PSFA/PV1A/PYRA/P36A/P9YA/P9ZA Pressure (1 Pin, Blue Or Green Oval Connector)(1.610" Long)(Screws Into Front Of Rear Cover) 2008-11 ..... 1 ..... 28600-RCL-003

30411E .....Switch, BCLA/GPLA/GPPA-3/GPPA-4/MCTAMKYA/MKZA/MRMA (#412)(Screws In Rear Of Bell Housing)(Green Connector)(Flat)(38 PSI) 2002-08 ..... 1 ..... 28600-R90-003

50411A.....Switch, BZHA/BZKA-1/BZNA/MCLA/MZHA/MZJA # 412 (1 Blade, Grey Connector)(1.645"Long) Screws Into Rear Of Bell Housing 2003-11 ..... 1 ..... 28600-RCL-004

© Whatever It Takes Transmission Parts. Inc.

PART #	ELECTRICAL COMPONENTS (Continued)	QTY	REFERENCE #
160412D	Switch, MNZA Pressure (1 Blade, Tan Square Connector)(1.870"Long)(Screws Into Rear Of Bell Housing) 2007	1	28600-RCR-004
160412E	Switch, BJ1A/B5RA/B5SA/B90A/MM7A/MNZA/MZKA/M8SA/M9DA/M91A Pressure (1 Pin Oval, Grey Connector)(1.865"Long) 2008-11	1	28600-R90-004
160421A	Use 50421A	AR	
160421T	Solenoid, MCTA Shift "A" (Internal)(W/Brown Cap)(3.140"Long) 2004-08 (Also Fits MCTA # 422 & 426 2004-08)	1-3	28400-RCT-003
50421A	Solenoid, BCLA/BZNA/MZKA-1/BZNA/B90A/GPLA/GPPA-3/GPPA-4/MCLA/MKYA/MKZA/ MM7A/MNZA/MRMA/MZHA/MZJA Shift "A" (W/Brown Cap)(3.130" Long) 2002-11 (Also Fits BCLA/BZNA/MZKA-1/BZNA/B90A/GPLA/GPPA-3/GPPA-4/MCLA/MKYA/MKZA/ MM7A/MNZA/MRMA/MZHA/MZJA Shift "B" # 422 & # 426 2002-11)	1-3	28400-PRP-004
160422A	Use 50421A	AR	
160422T	Use 160421T	AR	
160423A	Use 50422A	AR	28500-PRP-004
50422A	Solenoid, BCLA/BZNA/MZKA-1/BZNA/B90A/GPLA/GPPA-3/GPPA-4/MCLA/MKYA/MKZA/ MM7A/MNZA/MRMA/MZHA/MZJA Shift "B" # 423 (W/Black Cap)(3.468" Long) 2002-11 (Also Fits BCLA/BZNA/MZKA-1/BZNA/B90A/GPLA/GPPA-3/GPPA-4/MCLA/MKYA/MKZA/MM7A/ MNZA/MRMA/MZHA/MZJA # 427 2002-11)	1-2	
160423T	Solenoid, MCTA Shift "B" (Internal)(W/Black Cap)(3.475"Long) 2004-08 (Also Fits MCTA # 427 2004-08)	1-2	28500-RCT-003
50425A	Solenoid, BCLA/BZHA/BZKA-1/BZNA/B90A/GPLA/GPPA-3/GPPA-4/MCLA/MCTA/MKYA/ MKZA/MM7A/MNZA/MRMA/MZHA/MZJA Linear (Single W/4 Bolt Aluminum Housing) 2002-11	1	28250-PRP-013
160426A	Use 50421A	AR	
160426T	Use 160421T	AR	
160427A	Use 50422A	AR	
160427T	Use 160423T	AR	
50431A	Solenoid W/Housing, BCLA/BZHA/BZJA/BZKA-1/BZNA/B90A/GPLA/GPPA-3/GPPA-4/MCLA/ MCTA/MKYA/MKZA/MM7A/MNZA/MRMA/MZHA/MZJA Linear "B" (2 Solenoids W/Aluminum Housing)(Bolts On Side Of Case) 2002-11	1	28260-PRP-014
20436D	Sensor, BCLA/GPLA/GPPA-3/GPPA-4/MCTA/MKYA/MKZA/MRMA (3 Prong)(.750"OD Chrome Tip)(# 438 On The Side, Front Of Case) 2002-08	1	28810-PPW-013
50436A	Sensor, BCLA/GPLA/GPPA-3/GPPA-4/MCTA/MKYA/MKZA/MRMA (On The Side, Rear Of Case) (1.985" Long, W/.700"OD Plastic Tip) 2002-08	1	28820-PPW-013
160438B	Sensor, BZHA/BZKA-1/BZNA/B90A/MCLA/MM7A/MNZA/MZHA/MZJA (2.780"Long)(On Side, Front Of Case) 2003-11	1	28810-RZH-004
40438A	Sensor, BZHA/BZKA-1/BZNA/B90A/MCLA/MM7A/MNZA/MZHA/MZJA # 436 On The Side, Rear Of Case (Cast # 7511F)(The 3 Prong Connector Is 180 Degree Turn From Bolt Hole) 2003-11	1	28820-RWE-003
160444A	Case Connector, BCLA/BZHA/BZKA-1/BZNA/B90A/GPLA/GPPA-3/GPPA-4/MCLA/MCTA/MKYA/ MKZA/MM7A/MNZA/MRMA/MZHA/MZJA (7 Pin Case Connector, W/3 One Pin & 2 Two Pin Connectors) 2002-11	1	28360-PRP-003
50445A	Wire Harness, BCLA/BZHA/BZKA-1/BZNA/B90A/GPLA/GPPA-3/GPPA-4/MCLA/MCTA/MKYA/ MKZA/MM7A/MNZA/MRMA/MZHA/MZJA # 445 (10 7/8"Long)(10 Wire) 2002-11	1	28950-PRP-010

PART #	MISCELLANEOUS COMPONENTS	QTY	REFERENCE #
160489A	Cover, BCLA/BZHA/BZKA-1/BZNA/B90A/GPLA/GPPA-3/GPPA-4/MCLA/MCTA/MKYA/MKZA/ MM7A/MNZA/MRMA/MZHA/MZJA Neutral Safety Switch (Black) 2002-11	1	21720-PRP-020
30492A	Drain Plug, BCLA/BZHA/BZJA/BZKA-1/BZNA/B90A/GPLA/GPPA-3/GPPA-4/MCLA/MCTA/ MKYA/MKZA/MM7A/MNZA/MRMA/MZHA/MZJA/MZKA-5/M91A 2002-11	1	90081-PX4-003
180493B	Dip Stick, BCLA/BZHA/MCLA/MCTA/MM7A/MZHA/MZJA (11 7/8"Long)(Goes In Solenoid Cover) 2003-11	1	25610-RG5-003
50493A	Dip Stick, BZKA/MCVA/MRVA/MZKA (12" Long)(Goes Into Top Rear Of Case) 2002-06	1	25610-PPW-023

PART #	HARDPARTS	QTY	REFERENCE #
50529-1A	Dowel Pin, BCLA/BZHA/BZKA-1/BZNA/B90A/GPLA/GPPA-3/GPPA-4/MCLA/MCTA/MKYA/ MKZA/MM7A/MNZA/MRMA/MZHA/MZJA Stator Tube Stop (.313"OD)(3.145"Long) 2002-11	1	90701-PK4-000
50529A	Tube, BCLA/BZHA/BZKA-1/BZNA/B90A/GPLA/GPPA-3/GPPA-4/MCLA/MCTA/MKYA/MKZA/ MM7A/MNZA/MRMA/MZHA/MZJA Stator (3.910"Long Shaft) 2002-11	1	25155-PRP-000
60530C	Pump Gears, BCLA/BZHA/BZJA/BZKA-1/BZNA/B90A/GPLA/GPPA-3/GPPA-4/MCLA/MCTA /MKYA/MKZA/MM7A/MNZA/MRMA/MZHA/MZJA/MZKA-5/M91A (38 Spline Gear)(28 Teeth) (.470" Thick)	1	
80535	Pin, BCLA/BZHA/BZJA/BZKA-1/BZNA/B90A/GPLA/GPPA-3/GPPA-4/MCLA/MCTA/MKYA/ MKZA/MM7A/MNZA/MRMA/MZHA/MZJA/MZKA-5/M91A Pump Gear 2002-11	1	25145-PA9-010
160550A	Drum, BCLA/BZHA/BZKA-1/BZNA/B90A/GPLA/GPPA-3/GPPA-4/MCLA/MKYA/MKZA/MM7A/ MNZA/MRMA/MZHA/MZJA 4th/5th Drum (2.745"Thick)(5.255"OD) 2002-11	1	22651-RFK-003
160550T	Drum, MCTA 4th/5th Drum (2.755"Thick)(5.133"OD) 2004-08	1	22651-RFK-J01

© Whatever It Takes Transmission Parts. Inc.

160552A	Drum, BCLA/GPLA/GPPA-3/GPPA-4/MCTA/MKYA/MKZA 2nd Clutch (1.890”Thick)(5.156”OD) (Uses 24 Teeth Steels) 2003-08	1	22621-RCL-003
160552C	Drum, MRMA 2nd Clutch (1.665”Thick)(5.156”OD)(Uses 24 Teeth Steels) 2003-06	1	22621-PRP-013
160552D	Drum, BZHA/BZKA-1/BZNA/B90A/MCLA/MM7A/MNZA/MZHA/MZJA 2nd Clutch (1.935”Thick) (5.245”OD)(Uses 24 Teeth Steels) 2003-11	1	22621-RCL-A02
160554A	Drum, BCLA/GPLA/GPPA-3/GPPA-4/MKYA/MKZA 1st/3rd Clutch (3.440”Thick)(5.161”OD) 2003-06	1	22510-RCL-003
160554C	Drum, MRMA 1st/3rd Clutch (3.290”Thick)(5.230”OD) 2002-06	1	22510-PRP-003
160554D	Drum, BZHA/BZKA-1/BZNA/B90A/MCLA/MM7A/MNZA/MZHA/MZJA 1st/3rd Clutch (3.430”Thick)(5.250”OD) 2003-11	1	22510-RCL-A02
160554T	Drum, MCTA 1st/3rd Clutch (3.443”Thick)(5.233”OD) 2004-08	1	22510-RCT-014
160560A	Piston Kit, BCLA/GPLA 4th Clutch 2003-06 (Also BCLA/GPLA 5th Clutch (# 561) 2003-06)	1-2	
160560AA	Piston Kit, BZHA/BZKA-1/BZNA/B90A/GPPA-3/GPPA-4/MCLA/MCTA/MKYA/MKZA/MM7A/MNZA/MRMA/MZHA/MZJA 4th Clutch 2002-11) (Also BZHA/BZKA-1/BZNA/B90A/GPPA-3/GPPA-4/MCLA/MCTA/MKYA/MKZA/MM7A/MNZA/MRMA/MZHA/MZJA 5th Clutch (# 561) 2002-11)	1-2	
160672A	Mainshaft, BCLA/BZHA/BZKA-1/BZNA/GPLA/GPPA-3/GPPA-4/MCLA/MCTA/MKYA/MKZA/MM7A/MNZA/MZHA/MZJA (14 3/8”Long)(W/2 Or W/3 ID Grooves)(2.750”OD Flange) 2003-11	1	23210-RCL-010
160672C	Mainshaft, MRMA (14 3/8”Long)(No ID Grooves)(2.750”OD Flange) 2002-06	1	23210-PRP-000
160675A	Secondary Shaft, BCLA/BZHA/BZKA-1/BZNA/B90A/GPLA/GPPA-3/GPPA-4/MCLA/MCTA/MKYA/MKZA/MM7A/MNZA/MRMA/MZHA/MZJA (12”Long)(5 O-Rings) 2002-11	1	23230-PRP-020
160676A	Countershaft, BCLA/MCTA (16 Teeth, 4 Grooves) 2003-08	1	23221-RCT-010
160676C	Countershaft, MRMA (16 Teeth, No Groove) 2002-06	1	23221-PRP-000
160676D	Countershaft, BZHA/BZKA-1/BZNA/MCLA/MNZA/MZHA/MZJA (16 Teeth, 2 Groove) (11 5/8”Long) 2003-11	1	23221-RZH-000
160676E	Countershaft, B90A/MM7A (16 Teeth, 1 Wide Groove) 2008-11	1	23221-RH3-020
160676F	Countershaft, GPLA/GPPA-3/GPPA-4/MKYA/MKZA (16 Teeth, 3 Groove)(11 5/8”Long) 2005-06	1	23221-RTH-000
50679A	Shaft, BCLA/BZHA/BZKA-1/BZNA/B90A/GPLA/GPPA-3/GPPA-4/MCLA/MCTA/MKYA/MKZA/MM7A/MNZA/MRMA/MZHA/MZJA Idler (3.400”Long)(.152”Thick Flange) 2002-11	1	23516-RCL-010
160689A	Oil Baffle, BCLA/BZHA/BZKA-1/BZNA/B90A/GPLA/GPPA-3/GPPA-4/MCLA/MCTA/MKYA/MKZA/MM7A/MNZA/MRMA/MZHA/MZJA Differential Housing To Bell Housing (.037”Thick)(3.135”OD) (1.615”ID)(W/1 Large Tab) 2002-11	1	41381-PPV-000
50689A	Oil Guide, BCLA/BZHA/BZKA-1/BZNA/B90A/GPLA/GPPA-3/GPPA-4/MCLA/MCTAMKYA/MKZA/MM7A/MNZA/MRMA/MZHA/MZJA Bell Housing To Countershaft (Tin)(.026”Thick)(2.510”OD) 2002-11	1	23225-PRP-020
50690A	Parking Gear, BCLA/BZHA/BZKA-1/BZNA/B90A/GPLA/GPPA-3/GPPA-4/MCLA/MCTA/MKYA/MKZA/MM7A/MNZA/MRMA/MZHA/MZJA (15 Lugs)(4.405”OD) 2002-11	1	23427-PRP-000
50694A	Retainer, BCLA/BZHA/BZKA-1/BZNA/B90A/GPLA/GPPA-3/GPPA-4/MCLA/MCTAMKYA/MKZA/MM7A/MNZA/MRMA/MZHA/MZJA Holds Horse Shoe Clips To Idler Shaft (.101”Thick)(1.060”OD) (.789”ID) 2002-11	1	90432-PRP-000
50697A	Oil Guide Collar, BCLA/BZHA/BZKA-1/BZNA/B90A/GPLA/GPPA-3/GPPA-4/MCLA/MCTAMKYA/MKZA/MM7A/MNZA/MRMA/MZHA/MZJA In Bell Housing Under Bearing # 238 (Aluminum) (.850”Thick)(1.140”ID)(W/2 Ears)(Uses 2 O-Rings) 2002-11	1	23235-PRP-000
50698A	Spacer, BCLA/BZHA/BZKA-1/BZNA/B90A/GPLA/GPPA-3/GPPA-4/MCLA/MCTAMKYA/MKZA/MM7A/MNZA/MRMA/MZHA/MZJA Differential To Case (.040”Thick)(2.995”OD)(1.620”ID)(1 Tab) 2002-11	1	41382-PRP-010
160707D	Transfer Gear, BZHA/BZNA/MCLA/MZHA Drive (69 Teeth, 1 Groove) 2003-11	1	29011-RZH-000
50707A	Transfer Gear, GPPA-3/GPPA-4/MKZA Drive (69 Teeth, No Groove)(1.180”Thick)(10 Bolt) 2005-06	1	29011-PRV-010
160710D	Gear, BZNA/MNZA/MZJA Idler (Mainshaft)(39 Teeth, 3 Groove)(3.500”OD) 2007-11	1	23511-RCL-A00
160710E	Gear, BZHA/BZKA-1/B90A/MCLA/MM7A/MZHA Idler (Mainshaft)(39 Teeth, No Groove) 2003-11	1	23511-R90-000
50710A	Gear, BCLA Idler (Mainshaft)(39 Teeth, 2 Groove) 2003-06	1	
50710BA	Gear, GPLA/GPPA-3/GPPA-4/MCTA/MKYA/MKZA/MMRA Idler (Mainshaft)(39 Teeth, 1 Groove) 2002-08	1	23511-RCL-010
160712A	Gear, BCLA/GPLA/GPPA-3/GPPA-4/MCTA/MKYA Idler (Secondary Shaft)(34 Teeth W/2 On The 4 Notches Side)(3.380”OD) 2003-08	1	23521-RCL-000
160712AA	Gear, BZHA/BZKA-1/BZNA/MCLA/MZHA Idler (Secondary Shaft)(34 Teeth W/2 Grooves On The Smooth Side)(3.380”OD) 2003-11	1	23521-RFK-900
160712C	Gear, MRMA Idler (Secondary Shaft)(39 Teeth, No Groove)(3.365”OD) 2002-06	1	23521-PRP-010
160712E	Gear, B90A/MM7A/MZJA Idler (Secondary Shaft)(34 Teeth, 2 Groove)(With 1 Groove On Each Side)(3.380”OD) 2007-11	1	23251-R90-000
160714A	Idler Gear, BCLA/BZHA/BZKA-1/MZHA/MZJA (33 Teeth, 1 Groove)(44 Teeth, 3 Groove) (2.305”Thick)(1.415”ID) 2003-11	1	23515-RCL-A00
160714D	Idler Gear, BNZA/MCLA/MNZA (30 Teeth, 1 Groove)(44 Teeth, 1 Groove)(2.305”Thick) (1.415”ID) 2003-08	1	23515-RCL-A00
160714E	Idler Gear, B90A/MM7A/MRMA (30 Teeth, No Groove)(44 Teeth, 3 Groove)(2.305”Thick) (1.415”ID) 2002-11	1	23515-R90-000
160714F	Idler Gear, GPLA/GPPA-3/GPPA-4/MCTA/MKYA/MKZA (30 Teeth, 2 Groove)(44 Teeth, No Groove) (2.305”Thick)(1.415”ID) 2004-08	1	23515-RCL-010

© Whatever It Takes Transmission Parts. Inc.

PART #	HARDPARTS (Continued)	QTY	REFERENCE #
160716A	Differential Housing, (BCLA 2005-06)/B90A/GPLA/MCTA/MKYA/MM7A/MRMA (W/10 Threaded Bolt Holes)(.440"Thick Bolt Flange)(1.100"ID Axle Hole) 2002-11	1	41100-R90-000
50716A	Differential Housing, BCLA (With 10 Threaded Bolt Holes)(.430" Thick Bolt Flange) 2003-04	1	
160716B	Differential Housing, BZKA-1/MZJA (W/14 Threaded Bolt Holes)(.630"Thick Bolt Flange) (1.095"ID Axle Hole) 2007-11	1	41100-RZJ-003
160716D	Differential Housing, BZHA/BZNA/MCLA/MNZA/MZHA (W/14 Non-Threaded Bolt Holes) (.520"Thick Bolt Flange)(1.095"ID Axle Hole) 2007-11	1	41100-RZH-003
160716G	Differential Housing, GPPA-3/GPPA-4/MKZA (W/10 Non-Threaded Bolt Holes)(.400"Thick Bolt Flange (1.105"ID Axle Hole) 2005-06	1	41100-RKZ-030
160720B	Differential Ring Gear, BZKA-1/MNZA (72 Teeth, 1 Groove)(14 Bolt) 2007-08	1	41233-RZH-000
160720C	Differential Ring Gear, MRMA (73 Teeth, 2 Groove)(10 Bolt) 2002-06	1	41233-PRP-000
160720D	Differential Ring Gear, BZHA/BZNA/MCLA/MZHA/MZJA (71 Teeth, 1 Groove)(14 Bolt) 2003-11	1	
160720E	Differential Ring Gear, MCTA/MM7A (71 Teeth, No Groove)(10 Bolt) 2004-11	1	41233-RCT-000
160720F	Differential Ring Gear, GPPA-3/GPPA-4/MKZA (71 Teeth, 4 Groove)(3 On Case Side, 1 On Bell Side)(10 Bolt) 2005-06	1	41233-RFL-010
160720G	Differential Ring Gear, GPLA/MKYA (71 Teeth, 4 Groove)(2 On Case Side, 2 On Bell Side) (10 Bolt) 2006-08	1	
50720A	Differential Ring Gear, BCLA/B90A (71 Teeth, 4 Groove) 2003-11	1	41233-RCL-010
50740A	Valve Body, BCLA/BZHA/BZKA-1/BZNA/B90A/GPLA/GPPA-3/GPPA-4/MCLA/MCTA/MKYA/ MKZA/MM7A/MNZA/MRMA/MZHA/MZJA (Less Gears)(Cast # PRP) 2002-11	1	27000-RXH-000
80741ELK	Lube Kit, BZHA/BZJA/BZKA-1/BZNA/GPLA/GPPA-3/GPPA-4/MCTA/MKYA/MKZAMM7A/MNZA/ MRMA/MZHA/MZJA/MZKA (Corrects Overheating Converter)(Fixes Up To 6 Transmissions) (Transgo)	1	
160746A	Seperator Plate, BCLA/BZNA/GPPA-3/GPPA-4/MCTA/MKZA/MNZA/MRMA Accumulator Body To Valve Body (For PRP Body) 2002-08	1	27212-PRP-020
160746B	Seperator Plate, BZHA/BZKA-1/B90A/GPLA/MCLA/MKYA/MM7A/MZHA/MZJA Accumulator Body To Valve Body (For RXH Body) 2003-11	1	27212-RCT-010
160747A	Seperator Plate, BCLA/BZHA/BZKA-1/BZNA/B90A/GPLA/GPPA-3/GPPA-4/MCLA/MCTA/MKYA/ MKZA/MM7A/MNZA/MRMA/MZHA/MZJA Valve Body 2002-11	1	27112-PRP-030
160750A	Bell Housing, BCLA/MCTA (2WD)(19 Bolts To Case)(Cast # RCL Or RCL-1) 2003-08	1	21111-RCL-305
160750B	Bell Housing, BZKA-1/MNZA/MZJA (2WD)(20 Bolts To Case)(Cast# RZH-1 Or RZJ-2) 2007-11 (This Looks Like An AWD But Is Not)	1	21111-RZJ-305
160750C	Bell Housing, GPLA/MKYA/MRMA (2WD)(19 Bolts To Case)(Cast #PRP-2 Or PRP-4) 2002-06	1	21111-PRM-305
160750E	Bell Housing, B90A/MM7A (2WD)(19 Bolts To Case)(Cast # R90-1) 2008-11	1	21111-R90-305
160750G	Bell Housing, GPPA-3/GPPA-4/MKZA (AWD)(20 Bolts To Case)(Cast # PRW-1 Or PRW-2) 2005-06	1	21111-PRV-306
160750H	Bell Housing, BZHA/BZNA/MCLA/MZHA (AWD)(20 Bolts To Case)(Cast# RZH Or RZH-1) 2003-11	1	21111-RZH-305
160757A	Solenoid Cover, BCLA/BZHA/MCLA/MCTA/MM7A/MZHA/MZJA (Aluminum)(9 Bolt)(W/Dip Stick Hole)(Cast # PRP) 2003-11	1	28450-RCL-000
50757A	Solenoid Cover, BZKA-1/BZNA/B90A/GPLA/GPPA-3/GPPA-4/MKYA/MKZA/MNZA/MRMA (Aluminum)(9 Bolt) 2002-11	1	28450-PRP-000
160759A	Rear Cover, BCLA/GPLA/GPPA-3/GPPA-4/MCLA/MCTA/MKYA/MKZA (16 Bolt)(Cast # RCL) 2003-08	1	21240-RCL-010
160759C	Rear Cover, MRMA (16 Bolt)(Cast # PRP)2002-06	1	21240-PRP-010
160759D	Rear Cover, BZHA/BZKA-1/B90A/MM7A/MNZA/MZHA/MZJA (16 Bolt)(Cast # RCR Or RCV) 2003-11	1	21240-RCV-010
160760A	Case, BCLA/MCTA (2WD)(19 Bolts To Bell)(Cast # RCL) 2003-08 (These Cases Are Sleeved)	1	21210-RCL-010
160760B	Case, BZHA/BZKA-1/BZNA/MCLA/MNZA/MZHA/MZJA (AWD)(20 Bolts To Bell)(Cast # RXH) 2003-11 (BZKA-1/MNZA/MZJA Are 2WD With A Dummy AWD Case)	1	21210-RXH-020
160760E	Case, B90A/MM7A (2WD)(19 Bolts To Bell)(Cast # R90) 2008-11	1	21210-R90-000
160760F	Case, GPLA/MKYA (2WD)(19 Bolts To Bell)(Cast # RKY) 2005-06	1	21210-RKY-000
160760G	Case, GPPA-3/GPPA-4/MKZA (AWD)(20 Bolts To Bell)(Cast # RKZ) 2005-06	1	21210-RKZ-000
50760B	Case, MRMA (2WD)(19 Bolts To Bell)(Cast # PRP-3) 2002-06	1	21210-PRP-020
160776AK	Bolt Set, BCLA/B90A/GPLA/MCTA/MM7A/MRMA/MKYA Bell Housing To Case (19 Pieces) 2002-11	1	
160776BK	Bolt Set, BZHA/BZKA-1/BZNA/GPPA-3/GPPA-4/MCLA/MKZA/MNZA/MZHA/MZJA Bell Housing To Case (20 Pieces) 2003-11	1	
160780AK	Bolt Set, BCLA/BZHA/BZKA-1/BZNA/B90A/GPLA/GPPA-3/GPPA-4/MCLA/MCTA/MKYA/MKZA/ MM7A/MNZA/MRMA/MZHA/MZJA Rear Cover To Case (16 Pieces) 2002-11	1	
160786BK	Bolt Set, BZKA-1/MNZA Differential Ring Gear (1.235"Long)(14 Pieces) 2007-08	1	90003-P7T-000
160786DK	Bolt Set, BZHA/BZNA/MCLA/MZHA/MZJA Differential Ring Gear (1.655"Long)(14 Pieces) 2003-11	1	90003-PGV-000
50786AAK	Bolt Set, GPPA-3/GPPA-4/MKZA Differential Ring Gear/Transfer Gear (1.475"Long)(10 Pieces) 2005-06	1	90017-PET-000
50786AK	Bolt Set, BCLA/B90A/GPLA/MCTA/MKYA/MM7A/MRMA Differential Ring Gear (1.030"Long) (10 Pieces) 2002-11	1	90003-PA9-003
160795A	Use 80796	AR	

© Whatever It Takes Transmission Parts. Inc.

80796	Nut, BCLA/BZHA/BZKA-1/BZNA/B90A/GPLA/GPPA-3/GPPA-4/MCLA/MCTA/MKYA/MKZA/MM7A/MNZA/MRMA/MZHA/MZJA Mainshaft (Right Hand Thread) 2002-11	1	90203-PX4-010
40796A	Nut, BCLA/BZHA/BZKA-1/BZNA/B90A/GPLA/GPPA-3/GPPA-4/MCLA/MCTA/MKYA/MKZA/MM7A/MNZA/MRMA/MZHA/MZJA Countershaft (Left Hand Thread)(.515"Thick) 2002-11 (Also Fits BCLA/BZHA/BZKA-1/BZNA/B90A/GPLA/GPPA-3/GPPA-4/MCLA/MCTA/MKYA/MKZA/MM7A/MNZA/MRMA/MZHA/MZJA Secondary Shaft (# 797) 2002-11)	1-2	90201-PRP-000
160801D	Gear, BZHA/BZKA-1/BZNA/MCLA/MNZA/MZHA/MZJA 1st (Countershaft)(61 Teeth, No Groove)(5.653"OD) 2003-11	1	23421-RZH-000
160801E	Gear, B90A/GPLA/GPPA-3/GPPA-4/MKYA/MKZA/MM7A 1st (Countershaft)(56 Teeth, 1 Groove)(5.605"OD) 2005-11	1	23421-RFK-000
50801A	Gear, BCLA/MCTA/MRMA 1st (Countershaft)(56 Teeth,1 Very Light Groove)(5.600"OD) 2002-08	1	23421-PPV-010
160802A	Gear, BCLA/MRMA 1st (Secondary Shaft)(27 Teeth, No Groove) 2002-06	1	23411-PRP-010
160802D	Gear, BZHA/BZKA-1/BZNA/MCLA/MNZA/MZHA/MZJA 1st (Secondary Shaft)(28 Teeth, 3 Groove) 2003-11	1	23411-RZH-000
160802E	Gear, B90A/MCTA/MM7A 1st (Secondary Shaft)(27 Teeth, 1 Groove) 2004-11	1	23411-RCT-000
160802G	Gear, GPLA/GPPA-3/GPPA-4/MKYA/MKZA 1st (Secondary Shaft)(27 Teeth, 2 Groove) 2005-06	1	23411-RFK-000
160803A	Gear, BCLA/MCTA 2nd (Secondary Shaft)(43 Teeth, 3 Groove) 2003-08	1	23431-RCL-000
160803C	Gear, MRMA 2nd (Secondary Shaft)(44 Teeth, No Groove) 2002-06	1	23431-PRP-010
160803D	Gear, BZHA/BNZA/MCLA/MNZA/MZHA/MZJA 2nd (Secondary Shaft)(42 Teeth, 1 Groove Next To Hub) 2003-11	1	23431-RZH-000
160803E	Gear, BZKA-1/MM7A 2nd (Secondary Shaft)(42 Teeth, 1 Groove In Middle) 2008-11	1	23431-R90-B00
160803EA	Gear, B90A 2nd (Secondary Shaft)(42 Teeth, 2 Groove) 2008-11	1	
160803F	Gear, MKYA 2nd (Secondary Shaft)(43 Teeth, 1 Groove)(3.755"OD) 2005-06	1	
160803FA	Gear, MKZA 2nd (Secondary Shaft)(43 Teeth, No Groove) 2005-06	1	
160803G	Gear, GPLA/GPPA-3/GPPA-4 2nd (Secondary Shaft)(43 Teeth, 1 Groove)(3.902"OD) 2005-06	1	23431-RFK-000
160804C	Gear, BCLA/GPLA/GPPA-3/GPPA-4/MCTA/MKYA/MKZA/MRMA 2nd (Countershaft)(51 Teeth, No Groove Or 1 Groove)(4.535"OD) 2002-08	1	23441-RFK-000
160804D	Gear, BZNA/MCLA/MNZA/MZJA 2nd (Countershaft)(53 Teeth, 1 Wide Groove)(4.665"OD) 2003-11	1	23441-RZH-000
160804E	Gear, BZHA/BZKA-1/B90A/MM7A/MZHA 2nd (Countershaft)(53 Teeth, 1 Narrow Groove)(4.665"OD) 2007-11	1	23441-R90-B00
160807A	Gear, BCLA/GPLA/GPPA-3/GPPA-4/MKYA/MKZA 3rd (Countershaft)(43 Teeth, 1 Groove)(3.770"OD) 2003-11	1	23451-RCL-000
160807C	Gear, MRMA 3rd (Countershaft)(38 Teeth, 2 Groove)(3.685"OD) 2002-06	1	23451-PRM-A01
160808A	Gear, BCLA/GPLA/GPPA-3/GPPA-4/MKYA/MKZA 3rd (Secondary Shaft)(53 Teeth, 1 Groove)(4.615"OD) 2003-06	1	23455-RCL-000
160808C	Gear, MRMA 3rd (Secondary Shaft)(50 Teeth, 2 Groove) 2002-06	1	23455-PRM-A01
160808D	Gear, BZNA 3rd (Secondary Shaft)(52 Teeth W/2 Grooves, 1 At Each Side)(4.540"OD) 2008	1	23455-RZH-000
160808DA	Gear, MNZA/MZJA 3rd (Secondary Shaft)(52 Teeth, 1 Wide Groove)(4.540"OD) 2007-11	1	
160808E	Gear, BZHA/BZKA-1/B90A/MM7A/MZHA 3rd (Secondary Shaft)(52 Teeth W/2 Grooves, On The Edge Next To The Nose)(4.540"OD) 2003-11	1	23455-R90-B00
160808T	Gear, MCTA 3rd (Secondary Shaft)(52 Teeth, No Groove) 2004-08	1	23455-RCT-000
160809A	Gear, BCLA 4th (Mainshaft)(42 Teeth, No Groove)(22 Teeth, 1 Groove) 2003-06	1	23461-RCL-020
160809C	Gear, MRMA 4th (Mainshaft)(45 Teeth, 2 Groove)(22 Teeth, No Groove) 2002-06	1	23461-PRM-A01
160809D	Gear, BZNA/MCLA/MNZA/MZJA 4th (Mainshaft)(44 Teeth, 1 Groove)(22 Teeth, No Groove) 2003-11	1	23461-RCT-900
160809E	Gear, BZKA-1/B90A/MM7A 4th (Mainshaft)(44 Teeth, No Groove)(22 Teeth, 1 Groove) 2008-11	1	
160809G	Gear, GPLA/GPPA-3/GPPA-4/MKYA/MKZA 4th (Mainshaft)(42 Teeth, 2 Groove)(22 Teeth, No Groove) 2005-06	1	23461-RCR-000
160809H	Gear, BZHA/MZHA 4th (Mainshaft)(44 Teeth, No Groove)(22 Teeth, No Groove) 2007-11	1	23461-R90-B00
160809T	Gear, MCTA 4th (Mainshaft)(44 Teeth, No Groove)(22 Teeth, 3 Groove) 2004-08	1	
160810A	Gear, BCLA/GPLA/GPPA-3/GPPA-4/MKYA/MKZA 4th (Countershaft)(31 Teeth, 2 Groove)(3.260"OD) 2003-06	1	23471-RCL-010
160810B	Gear, MCTA 4th (Countershaft)(34 Teeth, 3 Groove)(3.330"OD) 2004-08	1	23471-RFK-901
160810C	Gear, MRMA 4th (Countershaft)(33 Teeth, 2 Groove)(3.225"OD) 2002-06	1	23471-PRM-A01
160810D	Gear, BZHA/BZNA/MCLA/MNZA/MZHA/MZJA 4th (Countershaft)(34 Teeth, 1 Groove)(3.330"OD) 2003-11	1	23471-R90-B00
160810E	Gear, BZKA-1/B90A/MM7A 4th (Countershaft)(34 Teeth, No Groove) 2008-11	1	23471-R90-B00
160812A	Gear, BCLA/BZHA/BZKA-1/BZNA/B90A/MCLA/MCTA/MNZA/MZHA/MZJA 5th (Mainshaft)(53 Teeth, 1 Groove)(4.750"OD) 2002-11	1	23481-RCT-000
160812C	Gear, MRMA 5th (Mainshaft)(56 Teeth, No Groove) 2002-06	1	23481-PRP-010
160812E	Gear, MM7A 5th (Mainshaft)(56 Teeth, 2 Groove)(4.680"OD) 2009-11	1	23481-RCT-A00
160812G	Gear, GPLA/GPPA-3/GPPA-4/MKYA/MKZA 5th (Mainshaft)(53 Teeth, 3 Groove)(4.750"OD) 2005-06	1	23481-RFK-900
160813A	Gear, BCLA/MCTA 5th (Countershaft)(30 Teeth, No Groove)(.731"Thick)(2.695"OD) 2003-08	1	23491-RCL-000
160813B	Gear, BZHA/BZKA-1/BZNA/B90A/MCLA/MNZA/MZHA/MZJA 5th (Countershaft)(30 Teeth, No Groove)(.865"Thick)(2.695"OD) 2003-11	1	23491-RCT-A00
160813C	Gear, MRMA 5th (Countershaft)(32 Teeth, 1 Groove)(.731"Thick)(2.695"OD) 2002-06	1	23491-PRP-000

© Whatever It Takes Transmission Parts. Inc.

PART #	HARDPARTS (Continued)	QTY	REFERENCE #
160813E	Gear, MM7A 5th (Countershaft)(30 Teeth, 1 Groove)(.731"Thick)(2.695"OD) 2009-11	1	23491-RM7-000
160813G	Gear, GPLA/GPPA-3/GPPA-4/MKYA/MKZA 5th (Countershaft)(30 Teeth, 2 Groove)(.865"Thick) (2.695"OD) 2005-06	1	23491-RFK-900
50816A	Gear, BCLA/BZHA/BZKA-1/BZNA/B90A/GPLA/GPPA-3/GPPA-4/MCLA/MCTA/MKYA/MKZA/ MM7A/MNZA/MRMA/MZHA/MZJA Reverse (Countershaft)(44 Teeth)(4.485"OD)(1.805"ID) 2002-11	1	23531-PRP-010
50818A	Gear, BCLA/BZHA/BZKA-1/BZNA/B90A/GPLA/GPPA-3/GPPA-4/MCLA/MCTA/MKYA/MKZA/ MM7A/MNZA/MRMA/MZHA/MZJA Reverse Idler (26 Teeth, No Groove)(.610"Thick)(2.810"OD) (.786"ID) 2002-11	1	23541-PRP-000
50820A	Bracket, BCLA/BZHA/BZKA-1/BZNA/B90A/GPLA/GPPA-3/GPPA-4/MCLA/MCTA/MKYA/MKZA/ MM7A/MNZA/MRMA/MZHA/MZJA Reverse Idler (1 Bolt, Aluminum)(W/Shaft) 2002-11	1	21215-PRP-000
50830A	Selector, BCLA/BZHA/BZKA-1/BZNA/B90A/GPLA/GPPA-3/GPPA-4/MCLA/MCTA/MKYA/MKZA/ MM7A/MNZA/MRMA/MZHA/MZJA Reverse (.648"Thick) 2002-11	1	23565-PRP-010
50835A	Hub, BCLA/BZHA/BZKA-1/BZNA/B90A/GPLA/GPPA-3/GPPA-4/MCLA/MCTA/MKYA/MKZA/ MM7A/MNZA/MRMA/MZHA/MZJA Reverse Selector (26 Outer Teeth)(1.008"Thick) 2002-11	1	23566-PRP-000
50840A	Fork, BCLA/BZHA/BZKA-1/BZNA/B90A/GPLA/GPPA-3/GPPA-4/MCLA/MCTA/MKYA/MKZA/ MM7A/MNZA/MRMA/MZHA/MZJA Reverse (2.455"ID At Forks) 2002-11	1	24111-PRP-000
160850A	Use 50850A	AR	
180850A	Cushion, MCTA 1st & 3rd Clutch # 858 & 853 (.067"Thick)(4.540"OD)(Waved) 2004-08	1-2	22536-RCT-014
50850A	Cushion, BCLA/BZHA/BZKA-1/BZNA/B90A/GPLA/GPPA-3/GPPA-4/MCLA/MCTA/MKYA/MKZA/ MM7A/MNZA/MRMA/MZHA/MZJA 4th Clutch (.071"Thick)(4.605"OD) 2002-11 (Also Fits BCLA/ BZHA/BZKA-1/BZNA/B90A/GPLA/GPPA-3/GPPA-4/MCLA/MCTA/MKYA/MKZA/MM7A/MNZA/ MRMA/MZHA/MZJA 1st, & 3rd Clutch (# 853, 858) 2002-11)(Also Fits MCTA 5th Clutch (# 851) 2004-08)(Also Fits MRMA 2nd Clutch (# 852) 2002-06)	1-5	22536-PRP-013
160851A	Cushion, BCLA/BZHA/BZKA-1/MZNA/B90A/GPLA/GPPA-3/GPPA-4/MCLA/MKYA/MKZA/ MM7A/MNZA/MRMA/MZHA/MZJA 5th Clutch Wave Spring (.060"Thick)(4.600"OD) 2002-11	1	
160851T	Use 50850A	AR	
160852A	Cushion, BCLA/BZHA/BZKA-1/BZNA/B90A/GPLA/GPPA-3/GPPA-4/MCLA/MCTA/MKYA/ MKZA/MM7A/MNZA/MZHA/MZJA 2nd Clutch Wave Spring (.079"Thick)(4.462"OD) 2003-11	1	22537-RCL-013
160852C	Use 50850A	AR	
160853A	Use 50850A	AR	
160858A	Use 50850A	AR	
80861	Snap Ring, BCLA/BZHA/BZJA/BZKA-1/BZNA/B90A/GPLA/GPPA-3/GPPA-4/MCLA/MCTA/ MKYA/MKZA/MM7A/MNZA/MRMA/MZHA/MZJA/MZKA-5/M91A Holds (# 876) 1st Clutch Pressure Plate In 2002-11 Also Fits BCLA/BZHA/BZJA/BZKA-1/BZNA/B90A/GPLA/GPPA-3/ GPPA-4/MCLA/MCTA/MKYA/MKZA/MM7A/MNZA/MRMA/MZHA/MZJA/MZKA-5/M91A Holds (# 873, & 878) 2nd, & 3rd Clutch Pressure Plate In 2002-11)	1-3	90605-PX4-000
180861A	Snap Ring, MCTA Holds (# 876) 1st Clutch Pressure Plate In (.079"Thick)(5.210"OD) 2004-08 (Also Fits MCTA 3rd Clutch (# 878) 2004-08)	1-2	90605-RCT-004
50861A	Snap Ring, BCLA/BZHA/BZKA-1/BZNA/B90A/GPLA/GPPA-3/GPPA-4/MCLA/MKYA/MKZA/ MM7A/MNZA/MRMA/MZHA/MZJA Holds 4th Clutch Pressure Plate In (.070"Thick)(5.230"OD) 2002-11 (Also Fits BCLA/BZHA/BZKA-1/BZNA/B90A/GPLA/GPPA-3/GPPA-4/MCLA/MKYA/ MKZA/MM7A/MNZA/MRMA/MZHA/MZJA 5th Clutch (# 864) 2002-11)	1-2	90605-P7T-003
80862	Snap Ring, BCLA/BZHA/BZJA/BZKA-1/BZNA/B90A/GPLA/GPPA-3/GPPA-4/MCLA/MCTA/ MKYA/MKZA/MM7A/MNZA/MRMA/MZHA/MZJA/MZKA-5/M91A Holds 4th Clutch Spring Retainer In 2002-11 (Also Fits BCLA/BZHA/BZJA/BZKA-1/BZNA/B90A/GPLA/GPPA-3/ GPPA-4/MCLA/MCTA/MKYA/MKZA/MM7A/MNZA/MRMA/MZHA/MZJA/MZKA-5/M91A 5th Clutch (# 865) 2002-11)	1-2	90603-PX4-000
20862F	Snap Ring, BCLA/BZHA/BZKA-1/BZNA/B90A/GPLA/GPPA-3/GPPA-4/MCLA/MKYA/MKZA/ MM7A/MNZA/MRMA/MZHA/MZJA Holds (# 877) 1st Clutch Spring Retainer In (.070"Thick) (1.945"OD) 2002-11 (Also Fits BCLA/BZHA/BZKA-1/BZNA/B90A/GPLA/GPPA-3/GPPA-4/MCLA/ MKYA/MKZA/MM7A/MNZA/MRMA/MZHA/MZJA 2nd & 3rd Clutch (# 871, & 874) 2002-11)	1-3	90603-P6H-003
80870	Snap Ring, BCLA/BZHA/BZJA/BZKA-1/BZNA/B90A/GPLA/GPPA-3/GPPA-4/MCLA/MCTA/ MKYA/MKZA/MM7A/MNZA/MRMA/MZHA/MZJA/MZKA-5/M91A Holds Bearing In Stator (Front) 2002-11	1	
160871A	Use 20862F	AR	
160871T	Snap Ring, MCTA Holds 3rd Clutch Spring Retainer In (.075"Thick)(1.930"OD) 2004-08 (Also Fits MCTA Holds 1st Clutch Spring Retainer In (# 877) 2004-08)	1-2	90603-RCT-004
160873A	Use 80861	AR	
160873D	Use 160876D	AR	
160874A	Use 20862F	AR	
160876A	Use 80861	AR	
160876D	Snap Ring, BZHA/BZKA-1/BZNA/B90A/MCLA/MM7A/MNZA/MZHA/MZJA Holds 1st Clutch Pressure Plate In (.070"Thick)(5.165"OD) 2003-11 (Also Fits BZHA/BZKA-1/BZNA/B90A/ MCLA/MM7A/MNZA/MZHA/MZJA Holds 2nd Clutch Pressure Plate In (# 873) 2003-11)	1-2	90605-RCL-A01
160877A	Use 20862F	AR	
160877T	Use 160879T	AR	
160878A	Use 80861	AR	

© Whatever It Takes Transmission Parts. Inc.

60879C	Snap Ring, BCLA/BZHA/BZKA-1/BZNA/B90A/GPLA/GPPA-3/GPPA-4/MCLA/MCTA/MKYA/ MKZA/MM7A/MNZA/MRMA/MZHA/MZJA Holds Caged Bearing To Mainshaft 2002-11	1	90603-P0X-000
40880A	Snap Ring, BCLA/BZHA/BZKA-1/BZNA/B90A/GPLA/GPPA-3/GPPA-4/MCLA/MCTAMKYA/ MKZA/MM7A/MNZA/MRMA/MZHA/MZJA Holds Bearing # 235 To Case (.077"Thick)(3.355"OD) 2002-11	1	90615-POZ-000
160881A	Use 50881A	AR	
50881A	Snap Ring, BCLA/BZKA-1/BZNA/B90A/GPLA/GPPA-3/GPPA-4/MCLA/MCTA/MKYA/MKZA/ MM7A/MNZA/MRMA/MZHA/MZJA Holds 2nd Clutch Drum To Secondary Shaft (.078"Thick) (1.405"OD) 2002-11	1	90621-PRP-000
30886A	Snap Ring, BCLA/BZHA/BZKA-1/BZNA/B90A/GPLA/GPPA-3/GPPA-4/MCLA/MCTA/MKYA/ MKZA/MM7A/MNZA/MRMA/MZHA/MZJA Holds Collar # 269 To Countershaft (.040"Thick) 2002-11	1	90614-PX4-700
30887B	Horse Shoe Clips, BCLA/BZHA/BZKA-1/BZNA/B90A/GPLA/GPPA-3/GPPA-4/MCLA/MCTA/ MKYA/MKZA/MM7A/MNZA/MRMA/MZHA/MZJA Countershaft (.078"Thick)(1.699"Long) (.187"Wide)(2 Per Pack) 2002-11	1	90431-P6H-000
50889A	Snap Ring, BCLA/BZHA/BZKA-1/BZNA/B90A/GPLA/GPPA-3/GPPA-4/MCLA/MCTA/MKYA/ MKZA/MM7A/MNZA/MRMA/MZHA/MZJA Holds Bearing # 286 To Case (.078"Thick)(2.285"OD) (W/Bent Ends) 2002-11	1	90614-PRP-000
50890A	Snap Ring, BCLA/BZHA/BZKA-1/BZNA/B90A/GPLA/GPPA-3/GPPA-4/MCLA/MCTA/MKYA/ MKZA/MM7A/MNZA/MRMA/MZHA/MZJA Holds Bearing # 274 To Case (.077"Thick)(3.285"OD) (W/Bent Ends) 2002-11	1	90609-PX4-000
50897A	Horse Shoe Clips, BCLA/BZHA/BZKA-1/BZNA/B90A/GPLA/GPPA-3/GPPA-4/MCLA/MCTA/MKYA/ MKZA/MM7A/MNZA/MRMA/MZHA/MZJA Idler Shaft (.056"Thick)(.970"Long)(2 Per Pack) 2002-11	1	90431-PRP-000
50899A	Snap Ring, BCLA/BZHA/BZKA-1/BZNA/B90A/GPLA/GPPA-3/GPPA-4/MCLA/MCTA/MKYA/ MKZA/MM7A/MNZA/MRMA/MZHA/MZJA Holds Retainer To Idler Shaft (.047"Thick)(.088"OD) (W/2 Eyelets) 2002-11	1	94510-20000
160900A	Accumulator, BCLA/GPLA/GPPA-3/GPPA-4/MCTA/MKYA/MKZA/MRMA (With Pistons) (Cast # PRP) 2002-08	1	27405-PRP-J00
160900D	Accumulator, BZHA/BZKA-1/BZNA/B90A/MCLA/MM7A/MNZA/MZHA/MZJA (With Pistons) (Cast # RXH) 2003-11	1	27405-RCL-A02
160924A	Regulator Body Assembly, BCLA/MCTA (Cast # PRP On Body & PRP On Accumulator Cover) 2003-08	1	27200-PRP-J02
160924B	Regulator Body Assembly, BZKA-1/B90A/GPLA/MCLA/MKYA/MM7A/MZJA (Cast # RXH On Body & RFK On Accumulator Cover) 2005-11	1	27200-RZH-000
160924D	Regulator Body Assembly, BZNA/GPPA-3/GPPA-4/MKZA/MNZA (Cast # PRP On Body & RFK On Accumulator Cover) 2005-08	1	27200-RCR-000
160924H	Regulator Body Assembly, BZHA/MZHA (Cast # RXH On Body & PRP On Accumulator Cover) 2007-11	1	
160924-3A	Seperator Plate, BCLA/BZHA/BZKA-1/BZNA/B90A/GPLA/GPPA-3/GPPA-4/MCLA/MCTA/MKYA/ MKZA/MM7A/MNZA/MRMA/MZHA/MZJA Regulator Body To Valve Body 2002-11	1	27412-PRP-010
160960AA	Piston, BZHA/BZKA-1/BZNA/B90A/GPPA-3/GPPA-4/MCLA/MCTA/MKYA/MKZA/MM7A/MNZA/ MRMA/MZHA/MZJA 4th Clutch (.338"Thick At Edge)(4.710"OD)(1.860"ID) 2002-11 (Also BZHA/BZKA-1/BZNA/B90A/GPPA-3/GPPA-4/MCLAMCTA/MKYA/MKZA/MM7A/MNZA/ MRMA/MZHA/MZJA 5th Clu (# 961) 2002-11)	1-2	
50960A	Piston, BCLA/GPLA 4th Clutch (.443"Thick)(4.710"OD)(1.860"ID) 2003-06 (Also Fits BCLA/GPLA 5th Clutch (# 961) 2003-06)	1-2	22680-RCL-003
160962A	Piston, BCLA/BZHA/BZKA-1/BZNA/B90A/MCLA/MM7A/MNZA/MZHA/MZJA 2nd Clutch (.496"Thick)(4.710"OD)(1.795"ID) 2003-11	1	22621-RCL-A05
160962C	Piston, MRMA 2nd Clutch (.550"Thick)(4.710"OD)(1.795"ID)(4.595"OD Of Pocket Where Wavy Ring Sets) 2002-06	1	22621-PRP-003
160962G	Piston, GPLA/GPPA-3/GPPA-4/MCTA/MKYA/MKZA 2nd Clutch (.550"Thick)(4.710"OD) (1.795"ID)(4.495"OD Of Pocket Where Wavy Ring Sets) 2004-08	1	22621-RCL-003
160965T	Piston, MCTA 3rd Clutch (.550"Thick)(4.710"OD) 2004-08 (Also Fits MCTA 1st Clutch (# 967) 2004-08)	1-2	22521-RCT-024
50967A	Piston, BCLA/BZHA/BZKA-1/BZNA/B90A/GPLA/GPPA-3/GPPA-4/MCLA/MKYA/MKZA/MM7A/ MNZA/MRMA/MZHA/MZJA 1st Clutch (.550"Thick)(4.710"OD) 2002-11 (Also Fits BCLA/BZHA/ BZKA-1/BZNA/B90A/GPLA/GPPA-3/GPPA-4/MCLA/MKYA/MKZA/MM7A/MNZA/MRMA/MZHA/ MZJA 3rd Clutch (# 965) 2002-11)	1-2	22521-RCL-003
80970	Spring, BCLA/BZHA/BZJA/BZKA-1/BZNA/B90A/GPLA/GPPA-3/GPPA-4/MCLA/MCTA/MKYA/ MKZA/MM7A/MNZA/MRMA/MZHA/MZJA/MZKA-5/M91A 4th Clutch (1.320"Tall Coil Height) 2002-11 (Also Fits BCLA/BZHA/BZJA/BZKA-1/BZNA/B90A/GPLA/GPPA-3/GPPA-4/MCLA/ MCTA/MKYA/MKZA/MM7A/MNZA/MRMA/MZHA/MZJA/MZKA-5/M91A 5th Clutch (# 971) 2002-11)	1-2	22541-PX4-004
160972A	Use 50977A	AR	
160975A	Use 50977A	AR	
160975T	Spring, MCTA 3rd Clutch Return (.295"Thick Wire)(2.560"OD) 2004-08 (Also Fits MCTA 1st Clutch (# 977) 2004-08)	1-2	22541-RCT-004
160977A	Use 50977A	AR	

© Whatever It Takes Transmission Parts. Inc.

PART #	HARDPARTS (Continued)	QTY	REFERENCE #
50977A	Spring, BCLA/BZHA/BZKA-1/BZNA/B90A/GPLA/GPPA-3/GPPA-4/MCLA/MCTA/MKYA/MKZA/ MM7A/MNZA/MRMA/MZHA/MZJA 1st Clutch Return (.275"Thick Wire)(2.550"OD) 2002-11 (Also Fits BCLA/BZHA/BZKA-1/BZNA/B90A/GPLA/GPPA-3/GPPA-4/MCLA/MCTA/MKYA/MKZA/ MM7A/MNZA/MRMA/MZHA/MZJA 2nd & 3rd Clutch (# 972 & 975) 2002-11)	1-3	.22541-PRP-003
80980	Retainer, BCLA/BZHA/BZJA/BZKA-1/BZNA/B90A/GPLA/GPPA-3/GPPA-4/MCLA/MCTA/ MKYA/MKZA/MM7A/MNZA/MRMA/MZHA/MZJA/MZKA-5/M91A 4th Clutch Spring 2002-11 (Also Fits BCLA/BZHA/BZJA/BZKA-1/BZNA/B90A/GPLA/GPPA-3/GPPA-4/MCLA/MCTA/ MKYA/MKZA/MM7A/MNZA/MRMA/MZHA/MZJA/MZKA-5/M91A 5th Clutch Spring (# 981) 2002-11)	1-2	.22533-PX4-010
160982A	Use 160987A	1	
160985A	Use 160987A	1	.22533-RCL-A01
160985D	Retainer/Piston, BZHA/BZKA-1/BZNA/B90A/MCLA/MM7A/MNZA/MZHA/MZJA 3rd Clutch (Bonded)(.905"Thick Through Center)(4.190"OD) 2003-11 (Also Fits BZHA/BZKA-1/BZNA/ B90A/MCLA/MM7A/MNZA/MZHA/MZJA 1st Clutch (# 987) 2003-11)	1-2	.22534-R90-003
160985T	Retainer/Piston, MCTA 3rd Clutch (Bonded)(.887"Thick Through Center)(4.190"OD) 2004-08 (Also Fits MCTA 1st Clutch (# 987) 2004-08)	1-2	.22533-RCT-004
160987A	Retainer/Piston, BCLA/GPLA/GPPA-3/GPPA-4/MCLA/MKYA/MKZA/MRMA 1st Clutch (Bonded) . (.930"Thick Through Center)(4.190"OD) 2002-06 (Also Fits BCLA/GPLA/GPPA-3/GPPA-4/MCLA/ MKYA/MRMA 3rd Clutch (# 985) 2002-06) (Also Fits BCLA/BZHA/BZKA-1/BZNA/B90A/ GPLA/GPPA-3/GPPA-4/MCLA/MCTA/MKYA/MKZA/MM7A/MNZA/MRMA/MZHA/MZJA 2nd Clutch (# 982) 2002-11)	1-3	.22533-PRP-003
160987D	Use 160985D	1	
160987T	Use 160985T	1	
50991-4A	Shift Rod, BCLA/BZHA/BZKA-1/BZNA/B90A/GPLA/GPPA-3/GPPA-4/MCLA/MCTA/MKYA/MKZA/ MM7A/MNZA/MRMA/MZHA/MZJA (# 991-4)(8 3/4"Long) 2002-11	1	.24410-PPV-000
50995A	Park Pawl Assembly, BCLA/BZHA/BZKA-1/BZNA/B90A/GPLA/GPPA-3/GPPA-4/MCLA/MCTA/ MKYA/MKZA/MM7A/MNZA/MRMA/MZHA/MZJA 2002-11	1	
160999A	Tube Set, BCLA/GPLA/GPPA-3/GPPA-4/MCTA/MKYA/MKZA/MRMA Regulator Body & Accumulator To Case & Bell Housing (8 Pieces) 2002-08	1	
50999AAK	Updated Tube Set, BCLA/GPLA/GPPA-3/GPPA-4/MCTA/MKYA/MRMA Regulator Body To Bell Housing (Contains: 2 Bent Tubes Welded On Bolt Brackets & 1 Bolt)	1	
160999B	Tube Set, BZHA/BZKA-1/BZNA/B90A/MCLA/MM7A/MNZA/MZHA/MZJA Regulator & Accumulator Body To Case & Bell Housing (8 Pieces) 2003-11	1	
50999-4A	Tube, BCLA/BZHA/BZKA-1/BZNA/B90A/GPLA/GPPA-3/GPPA-4/MCLA/MCTA/MKYA/MKZA/ MM7A/MNZA/MRMA/MZHA/MZJA Solenoid Housing To Regulator Body (No Screen)(1.375"Long) (1 Per Transmission) 2002-11	1	.22749-PW4-000
50999-5A	Tube, BCLA/BZHA/BZKA-1/BZNA/B90A/GPLA/GPPA-3/GPPA-4/MCLA/MCTA/MKYA/MKZA/ MM7A/MNZA/MRMA/MZHA/MZJA Solenoid Housing To Regulator Body (Screened)(1.400"Long) (Takes 6 Per Transmission) 2002-11	6	.22760-PPW-000

© Whatever It Takes Transmission Parts. Inc.

© Whatever It Takes Transmission Parts. Inc.

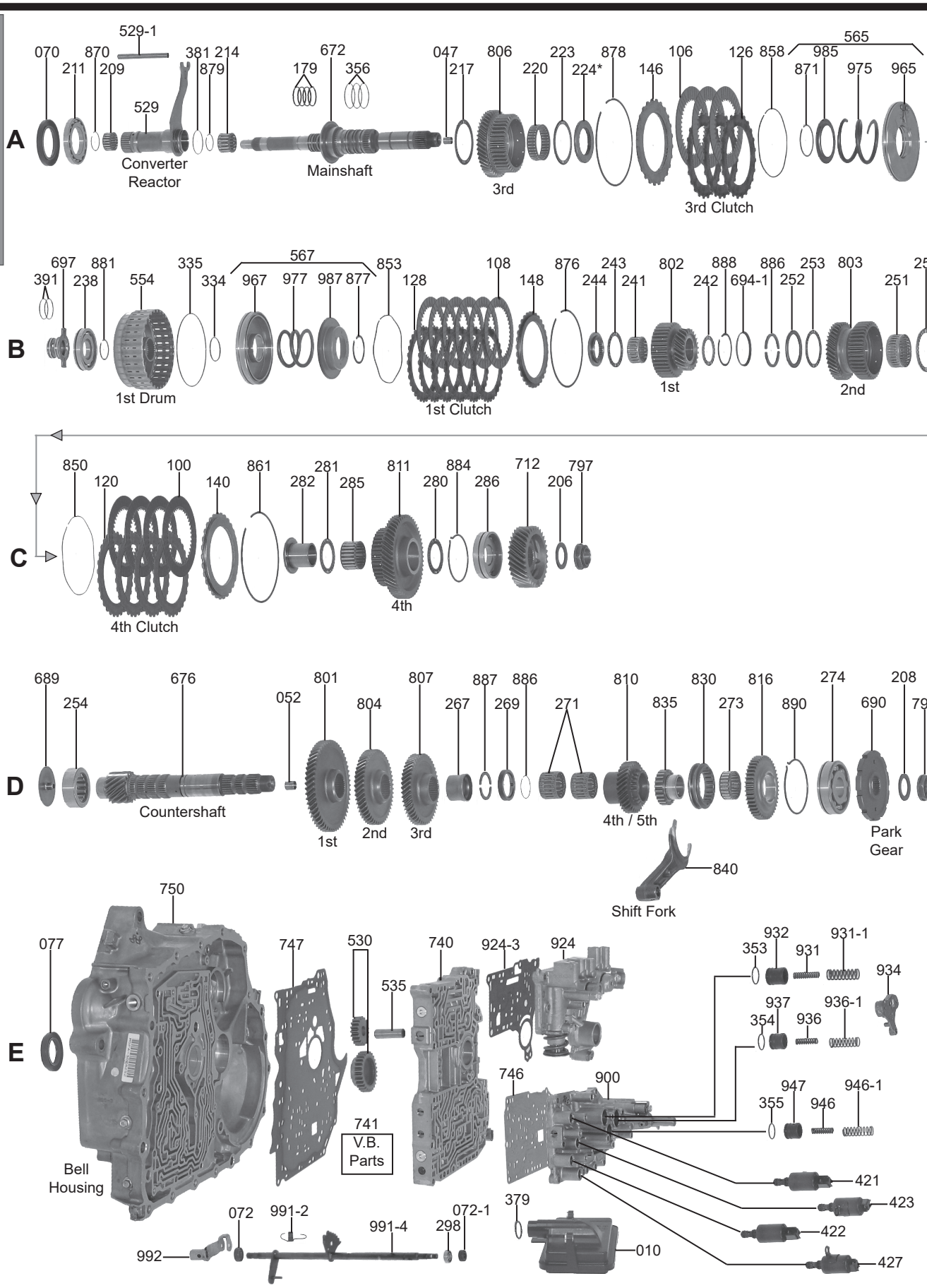

002 Overhaul Kits

004 Master L/Steels Kit

006 Master W/Steels Kit

119 Friction Module

139 Steel Module

© Whatever It Takes Transmission Parts. Inc.

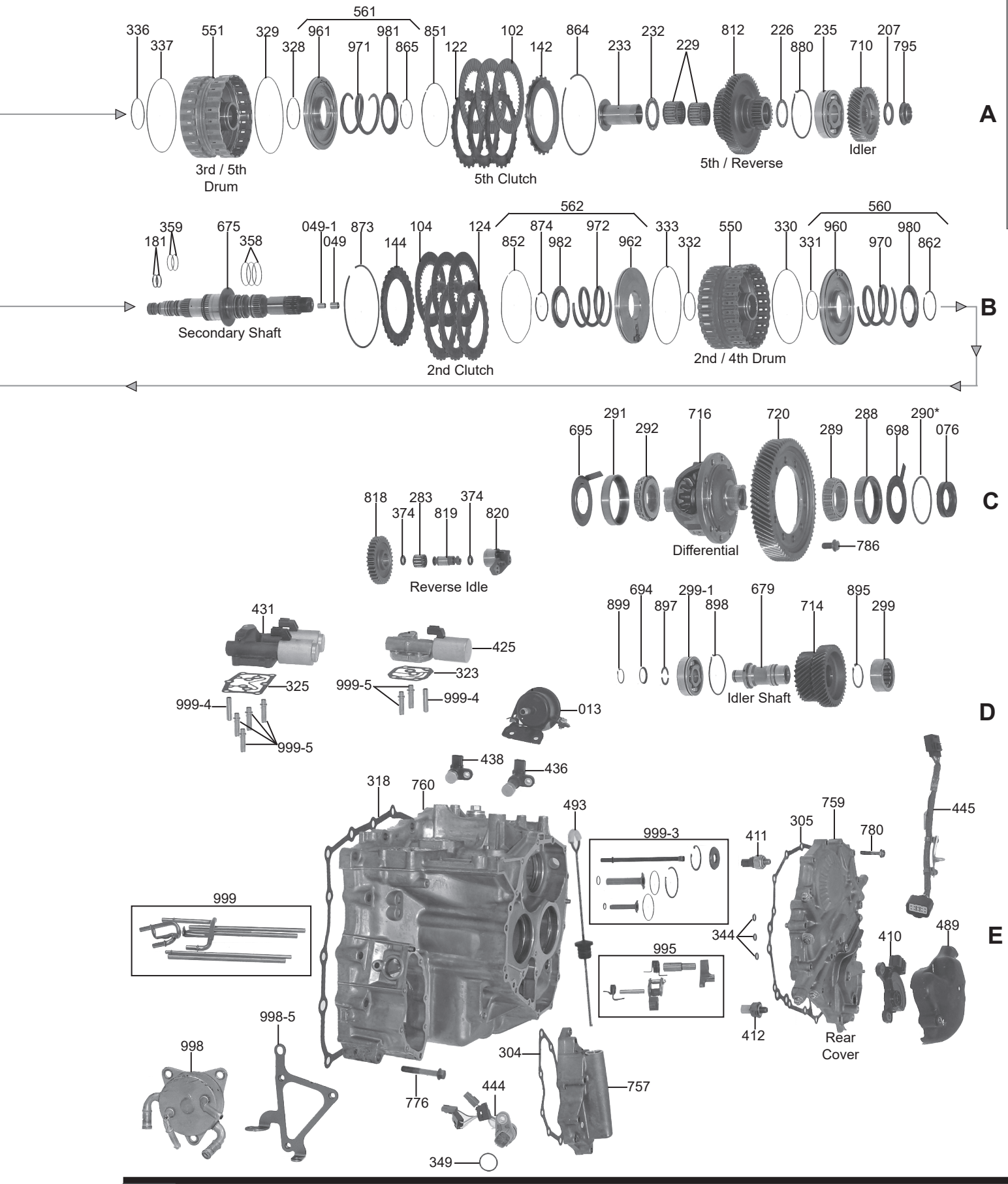

1-800-940-0197

© Whatever It Takes Transmission Parts. Inc.

PART #	OVERHAUL KITS	QTY	REFERENCE #
180002A	Overhaul Kit, MPCA/SMMA/SPCA/SP5A/BRZA/MZ2A/GNBA 2006-Up (For Bonded Retainer Sell 180987A)	1	

PART #	MASTER L/STEELS KIT	QTY	REFERENCE #
180004A	Master L/Steels KIt, MPCA/SPCA (W/GPX Frictions) 2006-Up (For Bonded Retainer Sell 180987A)	1	
180004E	Master L/Steels Kit, BRZA/MZ2A 2006-Up (For Bonded Piston Retainer Sell A180987A)	1	

PART #	MASTER W/STEELS KIT	QTY	REFERENCE #
180006A	Master W/Steels KIt. MPCA/SPCA (W/GPX Frictions) 2006-Up (For Bonded Retainer Sell 180987A)	1	

PART #	FILTERS	QTY	REFERENCE #
180010A	Filter, MPCA/SMMA/SPCA/SP5A 2006-Up	1	25420-RPC-003
180013A	Filter, B8BA/B90A/B97A/BCLA/BRZA/M8EA/M91A/M9RA/MCLA/MCTA/MNZA/MPCA/M4TA/ SMLA/SMRA/SPCA/SPCA (Cartridge Type) 2004-Up	1	

PART #	BUSHINGS	QTY	REFERENCE #
50047A	Bushing, GNBA/MPCA/MP5A/SMMA/SPCA/SP5A Mainshaft (.398" Wide)(.415"OD) 2006-11	1	
180049-1A	Bushing, GNBA/MPCA/M5PA/SMMA/SPCA/SP5A Secondary Shaft (Small, Inner)(.318"Wide) (.275"ID) 2006-11	1	
180049A	Bushing, GNBA/MPCA/M5PA/SMMA/SPCA/S5PA Secondary Shaft (Large, Outer)(.393"Wide) (.455"ID) 2006-11	1	
T-28999	Tool Set, Acura/Honda(22 Pcs Bushing Remover & Installer) (This Set Works For All Honda's W/Bushings)	1	

PART #	METAL CLAD SEALS	QTY	REFERENCE #
60070A	Seal, GNBA/MPCA/M5PA/SMMA/SPCA/SP5A Converter (44 X 68 X 8mm)Counter Clockwise Helix	1	91207-P7Z-003
60072	Seal, GNBA/MPCA/M5PA/SMMA/SPCA/SP5A Manual Shaft (.275" Thick)(8.75"OD)(In Bell)	1	
50072-1A	Seal, GNBA/MPCA/M5PA/SMMA/SPCA/SP5A Manual Shaft (In Rear Cover)(.275"Thick) (.715"OD) 2006-11	1	91201-PA9-004
50077A	Seal, GNBA/MPCA/M5PA/SMMA/SPCA/SP5A Axle (Bell Housing Side)(35 X 58 X 8mm) 2006-11	1	91206-PHR-003

PART #	FRICTIONS	QTY	REFERENCE #
180100A	Use 180104A	4	
180102A	Use 180104A	3	
180104A	Friction, GNBA/MPCA/M5PA/SMMA/SPCA/SP5A 2nd Clutch (.078")(38 Teeth)(4.702"OD) 2006-11 (Also Fits GNBA/MPCA/M5PA/SMMA/SPCA/SP5A 3rd Clutch # 106, 4th Clutch # 100, & 5th Clutch # 102 2006-11)	3-16	22544-RPC-004
180106A	Use 180104A	3	
180108A	Friction, GNBA/MPCA/M5PA/SMMA/SPCA/SP5A 1st Clutch (.074")(38 Teeth)(4.165"OD) 2006-11	6	22544-RPC-003
180119A	Friction Module, MPCA/M5PA/SMMA/SPCA/SP5A 2006-Up (GPX Frictions)	1	

PART #	STEELS	QTY	REFERENCE #
180120A	Steel, GNBA/MPCA/M5PA/SMMA/SPCA/SP5A 4th Clutch (.064")(30 Teeth)(3.392"ID) 2006-11	4	22653-RPC-004
180122A	Steel, GNBA/MPCA/SPCA 5th Clutch (.064")(24 Teeth)(3.380"ID) 2006-11 (Also Fits GNBA/MPCA/SPCA 3rd Clutch # 126)	4-8	22643-RPC-003
180122B	Steel, M5PA/SMMA/SP5A 5th Clutch (.080")(24 Teeth)(3.380"ID) 2007-10 (Also Fits M5PA/SMMA/SP5A 3rd Clutch # 126)	4-8	22643-RMM-003
180124A	Steel, GNBA/MPCA/SPCA 2nd Clutch (.079")(30 Teeth)(3.392"ID) 2006-11	4	22643-RPC-004
180126A	Use 180122	3	
180124B	Steel, M5PA/SMMA/SP5A 2nd Clutch (.092")(30 Teeth)(3.392"ID) 2007-10	3	22643-RMM-004
180128A	Steel, GNBA/MPCA/M5PA/SMMA/SPCA/SP5A 1st Clutch (.064")(32 Teeth)(3.235"ID) 2006-11	6	22543-RPC-003
180139A	Steel Module, SPCA/MPCA 2006-Up	1	STMHONDA52
180139B	Steel Module, SMMA 2007-08	1	

© Whatever It Takes Transmission Parts. Inc.

PART #	PRESSURE PLATES	QTY	REFERENCE #
180140AA	Pressure Plate, GNBA/MPCA/M5PA/SMMA/SPCA/SP5A 4th Clutch (.083")(30 Teeth)(3.390"ID) 2006-11 (Also Fits GNBA/MPCA/M5PA/SMMA/SPCA/SP5A 2nd Clutch # 144 2006-11)	1-2	22551-RPC-004
180140AB	Pressure Plate, GNBA/MPCA/M5PA/SMMA/SPCA/SP5A 4th Clutch (.087")(30 Teeth)(3.390"ID) 2006-11 (Also Fits GNBA/MPCA/M5PA/SMMA/SPCA/SP5A 2nd Clutch # 144 2006-11)	1-2	22552-RPC-004
180140AC	Pressure Plate, GNBA/MPCA/M5PA/SMMA/SPCA/SP5A 4th Clutch (.091")(30 Teeth)(3.390"ID) 2006-11 (Also Fits GNBA/MPCA/M5PA/SMMA/SPCA/SP5A 2nd Clutch # 144 2006-11)	1-2	22553-RPC-004
180140AD	Pressure Plate, GNBA/MPCA/M5PA/SMMA/SPCA/SP5A 4th Clutch (.095")(30 Teeth)(3.390"ID) 2006-11 (Also Fits GNBA/MPCA/M5PA/SMMA/SPCA/SP5A 2nd Clutch # 144 2006-11)	1-2	22554-RPC-004
180140AE	Pressure Plate, GNBA/MPCA/M5PA/SMMA/SPCA/SP5A 4th Clutch (.099")(30 Teeth)(3.390"ID) 2006-11 (Also Fits GNBA/MPCA/M5PA/SMMA/SPCA/SP5A 2nd Clutch # 144 2006-11)	1-2	22555-RPC-004
180140AF	Pressure Plate, GNBA/MPCA/M5PA/SMMA/SPCA/SP5A 4th Clutch (.103")(30 Teeth)(3.390"ID) 2006-11 (Also Fits GNBA/MPCA/M5PA/SMMA/SPCA/SP5A 2nd Clutch # 144 2006-11)	1-2	22556-RPC-004
180140AG	Pressure Plate, GNBA/MPCA/M5PA/SMMA/SPCA/SP5A 4th Clutch (.107")(30 Teeth)(3.390"ID) 2006-11 (Also Fits GNBA/MPCA/M5PA/SMMA/SPCA/SP5A 2nd Clutch # 144 2006-11)	1-2	22557-RPC-004
180140AH	Pressure Plate, GNBA/MPCA/M5PA/SMMA/SPCA/SP5A 4th Clutch (.111")(30 Teeth)(3.390"ID) 2006-11 (Also Fits GNBA/MPCA/M5PA/SMMA/SPCA/SP5A 2nd Clutch # 144 2006-11)	1-2	22558-RPC-004
180140AJ	Pressure Plate, GNBA/MPCA/M5PA/SMMA/SPCA/SP5A 4th Clutch (.115")(30 Teeth)(3.390"ID) 2006-11 (Also Fits GNBA/MPCA/M5PA/SMMA/SPCA/SP5A 2nd Clutch # 144 2006-11)	1-2	22559-RPC-004
180142AA	Pressure Plate, GNBA/MPCA/M5PA/SMMA/SPCA/SP5A 5th Clutch (.082")(24 Teeth)(3.380"ID) 2006-11 (Also Fits GNBA/MPCA/M5PA/SMMA/SPCA/SP5A 3rd Clutch # 146)	1-2	22561-RPC-003
180142AB	Pressure Plate, GNBA/MPCA/M5PA/SMMA/SPCA/SP5A 5th Clutch (.086")(24 Teeth)(3.380"ID) 2006-11 (Also Fits GNBA/MPCA/M5PA/SMMA/SPCA/SP5A 3rd Clutch # 146)	1-2	22562-RPC-003
180142AC	Pressure Plate, GNBA/MPCA/M5PA/SMMA/SPCA/SP5A 5th Clutch (.090")(24 Teeth)(3.380"ID) 2006-11 (Also Fits GNBA/MPCA/M5PA/SMMA/SPCA/SP5A 3rd Clutch # 146)	1-2	22563-RPC-003
180142AD	Pressure Plate, GNBA/MPCA/M5PA/SMMA/SPCA/SP5A 5th Clutch (.094")(24 Teeth)(3.380"ID) 2006-11 (Also Fits GNBA/MPCA/M5PA/SMMA/SPCA/SP5A 3rd Clutch # 146)	1-2	22564-RPC-003
180142AE	Pressure Plate, GNBA/MPCA/M5PA/SMMA/SPCA/SP5A 5th Clutch (.098")(24 Teeth)(3.380"ID) 2006-11 (Also Fits GNBA/MPCA/M5PA/SMMA/SPCA/SP5A 3rd Clutch # 146)	1-2	22565-RPC-003
180142AF	Pressure Plate, GNBA/MPCA/M5PA/SMMA/SPCA/SP5A 5th Clutch (.102")(24 Teeth)(3.380"ID) 2006-11 (Also Fits GNBA/MPCA/M5PA/SMMA/SPCA/SP5A 3rd Clutch # 146)	1-2	22566-RPC-003
180142AG	Pressure Plate, GNBA/MPCA/M5PA/SMMA/SPCA/SP5A 5th Clutch (.106")(24 Teeth)(3.380"ID) 2006-11 (Also Fits GNBA/MPCA/M5PA/SMMA/SPCA/SP5A 3rd Clutch # 146)	1-2	22567-RPC-003
180142AH	Pressure Plate, GNBA/MPCA/M5PA/SMMA/SPCA/SP5A 5th Clutch (.110")(24 Teeth)(3.380"ID) 2006-11 (Also Fits GNBA/MPCA/M5PA/SMMA/SPCA/SP5A 3rd Clutch # 146)	1-2	22568-RPC-003
180142AJ	Pressure Plate, GNBA/MPCA/M5PA/SMMA/SPCA/SP5A 5th Clutch (.114")(24 Teeth)(3.380"ID) 2006-11 (Also Fits GNBA/MPCA/M5PA/SMMA/SPCA/SP5A 3rd Clutch # 146)	1-2	22569-RPC-003
180144AA	Use 180140AA - AJ	1	
180146A	Use 180142AA-AJ	1	
180148AA	Pressure Plate, GNBA/MPCA/M5PA/SMMA/SPCA/SP5A 1st Clutch (.082")(32 Teeth)(3.235"ID) 2006-11	1	22551-RPC-003
180148AB	Pressure Plate, GNBA/MPCA/M5PA/SMMA/SPCA/SP5A 1st Clutch (.086")(32 Teeth)(3.235"ID) 2006-11	1	22552-RPC-003
180148AC	Pressure Plate, GNBA/MPCA/M5PA/SMMA/SPCA/SP5A 1st Clutch (.090")(32 Teeth)(3.235"ID) 2006-11	1	22553-RPC-003
180148AD	Pressure Plate, GNBA/MPCA/M5PA/SMMA/SPCA/SP5A 1st Clutch (.094")(32 Teeth)(3.235"ID) 2006-11	1	22554-RPC-003
180148AE	Pressure Plate, GNBA/MPCA/M5PA/SMMA/SPCA/SP5A 1st Clutch (.098")(32 Teeth)(3.235"ID) 2006-11	1	22555-RPC-003
180148AF	Pressure Plate, GNBA/MPCA/M5PA/SMMA/SPCA/SP5A 1st Clutch (.102")(32 Teeth)(3.235"ID) 2006-11	1	22556-RPC-003
180148AG	Pressure Plate, GNBA/MPCA/M5PA/SMMA/SPCA/SP5A 1st Clutch (.106")(32 Teeth)(3.235"ID) 2006-11	1	22557-RPC-003
180148AH	Pressure Plate, GNBA/MPCA/M5PA/SMMA/SPCA/SP5A 1st Clutch (.110")(32 Teeth)(3.235"ID) 2006-11	1	22558-RPC-003
180148AJ	Pressure Plate, GNBA/MPCA/M5PA/SMMA/SPCA/SP5A 1st Clutch (.114")(32 Teeth)(3.235"ID) 2006-11	1	22559-RPC-003

PART #	VALVE BODY KITS	QTY	REFERENCE #
S50165A	Valve Body Kit, MM2A (Superior)	1	

PART #	SEALING RINGS	QTY	REFERENCE #
180181AT	Ring, GNBA/MPCA/M5PA/SMMA/SPCA/SP5A Secondary Shaft (Front)(.074"Thick)(.830"OD) (Teflon) 2006-11	2	22814-RGC-003

© Whatever It Takes Transmission Parts. Inc.

PART #	WASHERS AND BEARINGS	QTY	REFERENCE #
180206A	Use 180208A	1	
180207A	Washer, GNBA/MPCA/M5PA/SMMA/SPCA/SP5A Under Mainshaft Nut (.115"Thick)(1.445"OD) (.880"ID) 2006-11	1	90402-RPC-000

PART #	WASHERS AND BEARINGS (Continued)	QTY	REFERENCE #
180208A	Washer, GNBA/MPCA/M5PA/SMMA/SPCA/SP5A Under Countershaft Nut (.115"Thick) (1.525"OD)(.960"ID) 2006-11 (Also Fits GNBA/MPCA/M5PA/SMMA/SPCA/SP5A # 206)	1-2	90402-POZ-000
80209	Caged Brg, GNBA/MPCA/M5PA/SMMA/SPCA/SP5A Stator(Front)(1.040"OD)	1	
50211A	Ball Brg, GNBA/MPCA/M5PA/SMMA/SPCA/SP5A (#211)(.293"Thick)(2.675"OD)(1.575"ID) (Cast # DG406808-PRP) 2006-11	1	91001-PRP-004
90214C	Caged Needle Bearing, GNBA/MPCA/M5PA/SMMA/SPCA/SP5A Converter Reactor To Mainshaft (Rear)(1.115" OD)(.695"Wide) 2006-11	1	
180217A	Use 180223A	1	
180220A	Caged Needle Bearing, GNBA/MPCA/M5PA/SMMA/SPCA/SP5A 3rd Gear To Mainshaft (.593"Thick)(2.035"OD) 2006-11	1	91016-RPC-003
180223A	Thrust Bearing, GNBA/MPCA/M5PA/SMMA/SPCA/SP5A 3rd Gear To 3rd/5th Drum (.080"Thick) (2.613"OD)(2.070"ID) 2006-11 (Also Fits GNBA/MPCA/M5PA/SMMA/SPCA/SP5A Mainshaft To 3rd Gear # 217)	1-2	91024-RPC-003
180224AA	Washer, GNBA/MPCA/M5PA/SMMA/SPCA/SP5A 3rd Gear To 3rd/5th Drum (.148"Thick) (2.480"OD) 2006-11	1	90414-RPC-000
180224AB	Washer, GNBA/MPCA/M5PA/SMMA/SPCA/SP5A 3rd Gear To 3rd/5th Drum (.149"Thick) (2.480"OD) 2006-11	1	90415-RPC-000
180224AC	Washer, GNBA/MPCA/M5PA/SMMA/SPCA/SP5A 3rd Gear To 3rd/5th Drum (.150"Thick) (2.480"OD) 2006-11	1	90416-RPC-000
180224AD	Washer, GNBA/MPCA/M5PA/SMMA/SPCA/SP5A 3rd Gear To 3rd/5th Drum (.151"Thick) (2.480"OD) 2006-11	1	90417-RPC-000
180224AE	Washer, GNBA/MPCA/M5PA/SMMA/SPCA/SP5A 3rd Gear To 3rd/5th Drum (.152"Thick) (2.480"OD) 2006-11	1	90418-RPC-000
180224AF	Washer, GNBA/MPCA/M5PA/SMMA/SPCA/SP5A 3rd Gear To 3rd/5th Drum (.153"Thick) (2.480"OD) 2006-11	1	90419-RPC-000
180224AG	Washer, GNBA/MPCA/M5PA/SMMA/SPCA/SP5A 3rd Gear To 3rd/5th Drum (.154"Thick) (2.480"OD) 2006-11	1	90420-RPC-000
180224AH	Washer, GNBA/MPCA/M5PA/SMMA/SPCA/SP5A 3rd Gear To 3rd/5th Drum (.155"Thick) (2.480"OD) 2006-11	1	90421-RPC-000
180224AJ	Washer, GNBA/MPCA/M5PA/SMMA/SPCA/SP5A 3rd Gear To 3rd/5th Drum (.156"Thick) (2.480"OD) 2006-11	1	90422-RPC-000
180224AK	Washer, GNBA/MPCA/M5PA/SMMA/SPCA/SP5A 3rd Gear To 3rd/5th Drum (.157"Thick) (2.480"OD) 2006-11	1	90423-RPC-000
180224AL	Washer, GNBA/MPCA/M5PA/SMMA/SPCA/SP5A 3rd Gear To 3rd/5th Drum (.158"Thick) (2.480"OD) 2006-11	1	90424-RPC-000
180226A	Thrust Bearing, GNBA/MPCA/M5PA/SMMA/SPCA/SP5A 5th Gear (Mainshaft) To Bearing # 235 (.079"Thick)(1.725"OD)(1.268"ID) 2006-11	1	91022-RPC-003
180229A	Caged Needle Bearing, GNBA/MPCA/M5PA/SMMA/SPCA/SP5A 5th Gear To Mainshaft (.930"Thick)(1.430") 2006-11	2	91014-RPC-000
180232A	Thrust Bearing, GNBA/MPCA/M5PA/SMMA/SPCA/SP5A 5th Gear To 3rd/5th Drum (.099"Thick) (2.105"OD)(1.265"ID) 2006-11	1	91023-RPC-003
180233A	Collar, GNBA/MPCA/M5PA/SMMA/SPCA/SP5A 5th Gear To 3rd/5th Drum (2.380"Long) (1.060"ID) 2006-11	1	90501-RPC-000
180235A	Ball Bearing, GNBA/MPCA/M5PA/SMMA/SPCA/SP5A Mainshaft To Case (.727"Thick) (2.955"OD)(1.062"ID)(Cast # 27BC07S5N) 2006-11	1	91001-RPC-006
180238A	Ball Bearing, GNBA/MPCA/M5PA/SMMA/SPCA/SP5A Secondary Shaft To Bell Housing (.432"Thick)(2.440"OD)(1.025"ID)(13 Balls)(Cast # NTNTM-SX05876NC3) 2006-11	1	91003-RPC-003
180241A	Caged Needle Bearing, GNBA/SMMA/SPCA 1st Gear To Secondary Shaft (.833"Thick) (1.465"OD) 2006-11	1	91011-RPC-005
180241AA	Caged Needle Bearing, MPCA/M5PA/SP5A 1st Gear To Secondary Shaft (.695"Thick) (1.465"OD) 2008-11	1	91011-RG5-005
180242A	Thrust Bearing, GNBA/MPCA/M5PA/SMMA/SPCA/SP5A 1st Gear To Secondary Shaft (.099"Thick)(1.712"OD)(1.228"ID) 2006-11	1	91025-RPC-003
180243A	Thrust Bearing, GNBA/MPCA/M5PA/SMMA/SPCA/SP5A 1st Gear To 1st Clutch Drum (.099"Thick)(2.016"OD)(1.525"ID) 2006-11	1	91026-RPC-003
180244AA	Washer, GNBA/SMMA/SPCA 1st Gear To 1st Clutch Drum (.154"Thick Inside)(2.160"OD) 2006-11	1	90521-RPC-000
180244AB	Washer, GNBA/SMMA/SPCA 1st Gear To 1st Clutch Drum (.155"Thick Inside)(2.160"OD) 2006-11	1	90522-RPC-000
180244AC	Washer, GNBA/SMMA/SPCA 1st Gear To 1st Clutch Drum (.156"Thick Inside)(2.160"OD) 2006-11	1	90523-RPC-000

© Whatever It Takes Transmission Parts. Inc.

180244AD.....Washer, GNBA/SMMA/SPCA 1st Gear To 1st Clutch Drum (.157"Thick Inside)(2.160"OD)
.....2006-11 .....1 .....90524-RPC-000
180244AE.....Washer, GNBA/SMMA/SPCA 1st Gear To 1st Clutch Drum (.158"Thick Inside)(2.160"OD)
.....2006-11 .....1 .....90525-RPC-000
180244AF.....Washer, GNBA/SMMA/SPCA 1st Gear To 1st Clutch Drum (.159"Thick Inside)(2.160"OD)
.....2006-11 .....1 .....90526-RPC-000

180244AG .....Washer, GNBA/SMMA/SPCA 1st Gear To 1st Clutch Drum (.160"Thick Inside)(2.160"OD)
.....2006-11 .....1 .....90527-RPC-000
180244AH.....Washer, GNBA/SMMA/SPCA 1st Gear To 1st Clutch Drum (.161"Thick Inside)(2.160"OD)
.....2006-11 .....1 .....90528-RPC-000
180244AJ .....Washer, GNBA/SMMA/SPCA 1st Gear To 1st Clutch Drum (.162"Thick Inside)(2.160"OD)
.....2006-11 .....1 .....90529-RPC-000
180244AK.....Washer, GNBA/SMMA/SPCA 1st Gear To 1st Clutch Drum (.163"Thick Inside)(2.160"OD)
.....2006-11 .....1 .....90530-RPC-000
180244AL .....Washer, GNBA/SMMA/SPCA 1st Gear To 1st Clutch Drum (.164"Thick Inside)(2.160"OD)
.....2006-11 .....1 .....90531-RPC-000
180244AM .....Washer, GNBA/SMMA/SPCA 1st Gear To 1st Clutch Drum (.165"Thick Inside)(2.160"OD)
.....2006-11 .....1 .....90532-RPC-000
180244AN.....Washer, GNBA/SMMA/SPCA 1st Gear To 1st Clutch Drum (.166"Thick Inside)(2.160"OD)
.....2006-11 .....1 .....90533-RPC-000
180244AP.....Washer, GNBA/SMMA/SPCA 1st Gear To 1st Clutch Drum (.167"Thick Inside)(2.160"OD)
.....2006-11 .....1 .....90534-RPC-000
180244AQ .....Washer, GNBA/SMMA/SPCA 1st Gear To 1st Clutch Drum (.168"Thick Inside)(2.160"OD)
.....2006-11 .....1 .....90535-RPC-000
180244AR.....Washer, GNBA/SMMA/SPCA 1st Gear To 1st Clutch Drum (.169"Thick Inside)(2.160"OD)
.....2006-11 .....1 .....90536-RPC-000
180244AS.....Washer, GNBA/SMMA/SPCA 1st Gear To 1st Clutch Drum (.170"Thick Inside)(2.160"OD)
.....2006-11 .....1 .....90537-RPC-000
180244CA.....Washer, MPCA/M5PA/SP5A 1st Gear To 1st Clutch Drum (.154"Thick Inside)(1.965"OD)
.....2006-11 .....1 .....90521-RG5-000
180244CB.....Washer, MPCA/M5PA/SP5A 1st Gear To 1st Clutch Drum (.155"Thick Inside)(1.965"OD)
.....2006-11 .....1 .....90522-RG5-000
180244CC .....Washer, MPCA/M5PA/SP5A 1st Gear To 1st Clutch Drum (.156"Thick Inside)(1.965"OD)
.....2006-11 .....1 .....90523-RG5-000
180244CD .....Washer, MPCA/M5PA/SP5A 1st Gear To 1st Clutch Drum (.157"Thick Inside)(1.965"OD)
.....2006-11 .....1 .....90524-RG5-000
180244CE.....Washer, MPCA/M5PA/SP5A 1st Gear To 1st Clutch Drum (.158"Thick Inside)(1.965"OD)
.....2006-11 .....1 .....90525-RG5-000
180244CF.....Washer, MPCA/M5PA/SP5A 1st Gear To 1st Clutch Drum (.159"Thick Inside)(1.965"OD)
.....2006-11 .....1 .....90526-RG5-000
180244CG .....Washer, MPCA/M5PA/SP5A 1st Gear To 1st Clutch Drum (.160"Thick Inside)(1.965"OD)
.....2006-11 .....1 .....90527-RG5-000
180244CH .....Washer, MPCA/M5PA/SP5A 1st Gear To 1st Clutch Drum (.161"Thick Inside)(1.965"OD)
.....2006-11 .....1 .....90528-RG5-000
180244CJ .....Washer, MPCA/M5PA/SP5A 1st Gear To 1st Clutch Drum (.162"Thick Inside)(1.965"OD)
.....2006-11 .....1 .....90529-RG5-000
180244CK.....Washer, MPCA/M5PA/SP5A 1st Gear To 1st Clutch Drum (.163"Thick Inside)(1.965"OD)
.....2006-11 .....1 .....90530-RG5-000
180244CL.....Washer, MPCA/M5PA/SP5A 1st Gear To 1st Clutch Drum (.164"Thick Inside)(1.965"OD)
.....2006-11 .....1 .....90531-RG5-000
180244CM .....Washer, MPCA/M5PA/SP5A 1st Gear To 1st Clutch Drum (.165"Thick Inside)(1.965"OD)
.....2006-11 .....1 .....90532-RG5-000
180244CN .....Washer, MPCA/M5PA/SP5A 1st Gear To 1st Clutch Drum (.166"Thick Inside)(1.965"OD)
.....2006-11 .....1 .....90533-RG5-000
180244CP.....Washer, MPCA/M5PA/SP5A 1st Gear To 1st Clutch Drum (.167"Thick Inside)(1.965"OD)
.....2006-11 .....1 .....90534-RG5-000
180244CQ .....Washer, MPCA/M5PA/SP5A 1st Gear To 1st Clutch Drum (.168"Thick Inside)(1.965"OD)
.....2006-11 .....1 .....90535-RG5-000
180244CR .....Washer, MPCA/M5PA/SP5A 1st Gear To 1st Clutch Drum (.169"Thick Inside)(1.965"OD)
.....2006-11 .....1 .....90536-RG5-000
180244CS.....Washer, MPCA/M5PA/SP5A 1st Gear To 1st Clutch Drum (.170"Thick Inside)(1.965"OD)
.....2006-11 .....1 .....90537-RG5-000
180250A .....Thrust Bearing, GNBA/MPCA/M5PA/SMMA/SPCA/SP5A 2nd Gear To Secondary Shaft
.....(.099"Thick)(2.510"OD)(1.960"ID) 2006-11 .....1 .....91027-RPC-003
180251A .....Caged Needle Bearing, GNBA/MPCA/M5PA/SMMA/SPCA/SP5A 2nd Gear To Secondary
.....Shaft (.795"Thick)(1.892"OD) 2006-11 .....1 .....91012-RPC-005
180252AA.....Washer, GNBA/MPCA/M5PA/SMMA/SPCA/SP5A Horse Shoe Clips To 2nd Gear
.....(.114"Thick)(2.148"OD)(W/36 Inner Splines) 2006-11 .....1 .....90502-RPC-000

© Whatever It Takes Transmission Parts. Inc.

PART #	WASHERS AND BEARINGS (Continued)	QTY	REFERENCE #
180252AB	Washer, GNBA/MPCA/M5PA/SMMA/SPCA/SP5A Horse Shoe Clips To 2nd Gear (.115"Thick)(2.148"OD)(W/36 Inner Splines) 2006-11	1	90503-RPC-000
180252AC	Washer, GNBA/MPCA/M5PA/SMMA/SPCA/SP5A Horse Shoe Clips To 2nd Gear (.116"Thick)(2.148"OD)(W/36 Inner Splines) 2006-11	1	90504-RPC-000
180252AD	Washer, GNBA/MPCA/M5PA/SMMA/SPCA/SP5A Horse Shoe Clips To 2nd Gear (.117"Thick)(2.148"OD)(W/36 Inner Splines) 2006-11	1	90505-RPC-000
180252AE	Washer, GNBA/MPCA/M5PA/SMMA/SPCA/SP5A Horse Shoe Clips To 2nd Gear (.118"Thick)(2.148"OD)(W/36 Inner Splines) 2006-11	1	90506-RPC-000
180252AF	Washer, GNBA/MPCA/M5PA/SMMA/SPCA/SP5A Horse Shoe Clips To 2nd Gear (.119"Thick)(2.148"OD)(W/36 Inner Splines) 2006-11	1	90507-RPC-000
180252AG	Washer, GNBA/MPCA/M5PA/SMMA/SPCA/SP5A Horse Shoe Clips To 2nd Gear (.120"Thick)(2.148"OD)(W/36 Inner Splines) 2006-11	1	90508-RPC-000
180252AH	Washer, GNBA/MPCA/M5PA/SMMA/SPCA/SP5A Horse Shoe Clips To 2nd Gear (.121"Thick)(2.148"OD)(W/36 Inner Splines) 2006-11	1	90509-RPC-000
180252AJ	Washer, GNBA/MPCA/M5PA/SMMA/SPCA/SP5A Horse Shoe Clips To 2nd Gear (.122"Thick)(2.148"OD)(W/36 Inner Splines) 2006-11	1	90510-RPC-000
180252AK	Washer, GNBA/MPCA/M5PA/SMMA/SPCA/SP5A Horse Shoe Clips To 2nd Gear (.123"Thick)(2.148"OD)(W/36 Inner Splines) 2006-11	1	90511-RPC-000
180252AL	Washer, GNBA/MPCA/M5PA/SMMA/SPCA/SP5A Horse Shoe Clips To 2nd Gear (.124"Thick)(2.148"OD)(W/36 Inner Splines) 2006-11	1	90512-RPC-000
180252AM	Washer, GNBA/MPCA/M5PA/SMMA/SPCA/SP5A Horse Shoe Clips To 2nd Gear (.125"Thick)(2.148"OD)(W/36 Inner Splines) 2006-11	1	90513-RPC-000
180252AN	Washer, GNBA/MPCA/M5PA/SMMA/SPCA/SP5A Horse Shoe Clips To 2nd Gear (.126"Thick)(2.148"OD)(W/36 Inner Splines) 2006-11	1	90514-RPC-000
180253A	Thrust Bearing, GNBA/MPCA/M5PA/SMMA/SPCA/SP5A Horse Shoe Clips To 2nd Gear (.099"Thick)(2.175"OD)(1.705"ID) 2006-11	1	91028-RPC-003
180254A	Roller Bearing, GNBA/MPCA/M5PA/SMMA/SPCA/SP5A Countershaft To Bell Housing (.745"Thick)(2.325"OD)(Cast # NTN 2U11013135 Or HL-8E-NK33)(13 Rollers) 2006-11	1	91101-RPC-003
180267A	Collar, GNBA/MPCA/M5PA/SMMA/SPCA/SP5A 3rd Gear (Countershaft) To Horse Shoe Clips (1.023"Thick) 2006-11	1	90441-RPC-000
180269A	Retainer, GNBA/MPCA/M5PA/SMMA/SPCA/SP5A Holds Horse Shoe Clips To Countershaft (.305"Thick)(1.765"OD)(1.303"ID) 2006-11	1	90445-RPC-000
180271A	Caged Needle Bearing, GNBA/MPCA/M5PA/SMMA/SPCA/SP5A 5th Gear To Countershaft (1.025"Thick)(1.538"OD) 2006-11	2	91015-RPC-003
180273A	Caged Needle Bearing, GNBA/MPCA/M5PA/SMMA/SPCA/SP5A Reverse Gear To Countershaft (.655"Thick)(1.650"OD) 2006-11	1	91017-RPC-004
180274A	Ball Bearing, GNBA/MPCA/M5PA/SMMA/SPCA/SP5A Countershaft To Case (.748"Thick)(3.070"OD)(1.140"ID)(Cast # NSK 829-11NX) 2006-11	1	91002-RPC-005
180280A	Thrust Bearing, GNBA/MPCA/M5PA/SMMA/SPCA/SP5A 4th Gear (Secondary Shaft) To Ball Bearing (.099"Thick)(2.037"OD)(1.382"ID) 2006-11 (Also Fits GNBA/MPCA/M5PA/SMMA/SPCA/SP5A # 281)	1-2	91021-RPC-003
180281A	Use 180280A.	1	
180282A	Collar, GNBA/MPCA/M5PA/SMMA/SPCA/SP5A 4th Gear To Secondary Shaft (1.298"Thick)(1.140"ID) 2006-11	1	90443-RPC-000
180283A	Caged Needle Bearing, GNBA/MPCA/M5PA/SMMA/SPCA/SP5A Reverse Idler Gear (Inner) (.715"Thick)(.750"OD) 2006-11	1	91018-RPC-003
180285A	Caged Needle Bearing, GNBA/MPCA/M5PA/SMMA/SPCA/SP5A 4th Gear To Secondary Shaft (.930"Thick)(1.585"OD) 2006-11	1	91013-RPC-003
180286A	Ball Bearing, GNBA/MPCA/M5PA/SMMA/SPCA/SP5A Secondary Shaft To Case (.688"Thick)(2.680"OD)(Cast # 29BC06S4N) 2006-11	1	91004-RPC-016
180288C	Cup Race, M5PA/SP5A Differential To Case (.598"Thick)(3.000"OD)(Cast # ECO CR-08A96-1) 2009-10	1	
180289A	Ball Bearing, GNBA/MPCA/SPCA Differential To Case (.785"Thick)(3.550"OD)(1.575"ID)(8 Balls)(Cast # 3TM-SX08C56CM21PX1) 2006-11 (Also Fits GNBA/MPCA/SPCA Differential To Bell Housing # 292 2006-11)	1-2	91121-RPC-003
180289B	Ball Bearing, SMMA Differential Housing To Case (.745"Thick)(3.310"OD)(1.575"ID)(9 Balls)(Cast # NTN SC08A93CM25PX1) 2007-08 (Also Fits SMMA Differential Housing To Bell Hsg # 292 2007-08)	1-2	91121-RMM-003
180289C	Cone Bearing, M5PA/SP5A Differential To Case (1.575"ID)(21 Rollers)(Cast # ECO CR-08A98-2) 2009-10	1	
180290AA	Shim, GNBA/MPCA/SPCA Differential Bearing To Case (.051"Thick)(3.565"OD)(3.075"ID) 2006-11	1	41441-RPC-000
180290AB	Shim, GNBA/MPCA/SPCA Differential Bearing To Case (.053"Thick)(3.565"OD)(3.075"ID) 2006-11	1	41442-RPC-000
180290AC	Shim, GNBA/MPCA/SPCA Differential Bearing To Case (.055"Thick)(3.565"OD)(3.075"ID) 2006-11	1	41443-RPC-000
180290AD	Shim, GNBA/MPCA/SPCA Differential Bearing To Case (.057"Thick)(3.565"OD)(3.075"ID) 2006-11	1	41444-RPC-000

© Whatever It Takes Transmission Parts. Inc.

180290AE.....Shim, GNBA/MPCA/SPCA Differential Bearing To Case (.059"Thick)(3.565"OD)(3.075"ID) .....2006-11 .....1 .....41445-RPC-000
180290AF.....Shim, GNBA/MPCA/SPCA Differential Bearing To Case (.061"Thick)(3.565"OD)(3.075"ID) .....2006-11 .....1 .....41446-RPC-000
180290AG .....Shim, GNBA/MPCA/SPCA Differential Bearing To Case (.063"Thick)(3.565"OD)(3.075"ID) .....2006-11 .....1 .....41447-RPC-000
180290AH.....Shim, GNBA/MPCA/SPCA Differential Bearing To Case (.065"Thick)(3.565"OD)(3.075"ID) .....2006-11 .....1 .....41448-RPC-000
180290AJ .....Shim, GNBA/MPCA/SPCA Differential Bearing To Case (.067"Thick)(3.565"OD)(3.075"ID) .....2006-11 .....1 .....41449-RPC-000
180290AK.....Shim, GNBA/MPCA/SPCA Differential Bearing To Case (.069"Thick)(3.565"OD)(3.075"ID) .....2006-11 .....1 .....41450-RPC-000
180290AL .....Shim, GNBA/MPCA/SPCA Differential Bearing To Case (.071"Thick)(3.565"OD)(3.075"ID) .....2006-11 .....1 .....41451-RPC-000
180290AM .....Shim, GNBA/MPCA/SPCA Differential Bearing To Case (.073"Thick)(3.565"OD)(3.075"ID) .....2006-11 .....1 .....41452-RPC-000
180290AN.....Shim, GNBA/MPCA/SPCA Differential Bearing To Case (.075"Thick)(3.565"OD)(3.075"ID) .....2006-11 .....1 .....41453-RPC-000
180290AP.....Shim, GNBA/MPCA/SPCA Differential Bearing To Case (.077"Thick)(3.565"OD)(3.075"ID) .....2006-11 .....1 .....41454-RPC-000
180290AQ .....Shim, GNBA/MPCA/SPCA Differential Bearing To Case (.080"Thick)(3.565"OD)(3.075"ID) .....2006-11 .....1 .....41455-RPC-000
180290AR.....Shim, GNBA/MPCA/SPCA Differential Bearing To Case (.081"Thick)(3.565"OD)(3.075"ID) .....2006-11 .....1 .....41456-RPC-000
180290AS.....Shim, GNBA/MPCA/SPCA Differential Bearing To Case (.083"Thick)(3.565"OD)(3.075"ID) .....2006-11 .....1 .....41457-RPC-000
180290AT .....Shim, GNBA/MPCA/SPCA Differential Bearing To Case (.085"Thick)(3.565"OD)(3.075"ID) .....2006-11 .....1 .....41458-RPC-000
180290AU.....Shim, GNBA/MPCA/SPCA Differential Bearing To Case (.087"Thick)(3.565"OD)(3.075"ID) .....2006-11 .....1 .....41459-RPC-000
180290AV .....Shim, GNBA/MPCA/SPCA Differential Bearing To Case (.089"Thick)(3.565"OD)(3.075"ID) .....2006-11 .....1 .....41460-RPC-000
180290AW .....Shim, GNBA/MPCA/SPCA Differential Bearing To Case (.091"Thick)(3.565"OD)(3.075"ID) .....2006-11 .....1 .....41461-RPC-000
180290AX.....Shim, GNBA/MPCA/SPCA Differential Bearing To Case (.093"Thick)(3.565"OD)(3.075"ID) .....2006-11 .....1 .....41462-RPC-000
180290AY .....Shim, GNBA/MPCA/SPCA Differential Bearing To Case (.095"Thick)(3.565"OD)(3.075"ID) .....2006-11 .....1 .....41463-RPC-000
50290AA.....Shim, M5PA/SP5A Differential Bearing To Case (.061"Thick)(2.980"OD)(2.680"ID) 2009-10 .....1 .....41428-PRP-000
50290AB.....Shim, M5PA/SP5A Differential Bearing To Case (.063"Thick)(2.980"OD)(2.680"ID) 2009-10 .....1 .....41429-PRP-000
50290AC.....Shim, M5PA/SP5A Differential Bearing To Case (.065"Thick)(2.980"OD)(2.680"ID) 2009-10 .....1 .....41430-PRP-000
50290AD.....Shim, M5PA/SP5A Differential Bearing To Case (.067"Thick)(2.980"OD)(2.680"ID) 2009-10 .....1 .....41431-PRP-000
50290AE.....Shim, M5PA/SP5A Differential Bearing To Case (.069"Thick)(2.980"OD)(2.680"ID) 2009-10 .....1 .....41432-PRP-000
50290AF .....Shim, M5PA/SP5A Differential Bearing To Case (.071"Thick)(2.980"OD)(2.680"ID) 2009-10 .....1 .....41433-PRP-000
50290AG .....Shim, M5PA/SP5A Differential Bearing To Case (.073"Thick)(2.980"OD)(2.680"ID) 2009-10 .....1 .....41434-PRP-000
50290AH.....Shim, M5PA/SP5A Differential Bearing To Case (.075"Thick)(2.980"OD)(2.680"ID) 2009-10 .....1 .....41435-PRP-000
50290AJ .....Shim, M5PA/SP5A Differential Bearing To Case (.077"Thick)(2.980"OD)(2.680"ID) 2009-10 .....1 .....41436-PRP-000
50290AK.....Shim, M5PA/SP5A Differential Bearing To Case (.079"Thick)(2.980"OD)(2.680"ID) 2009-10 .....1 .....41437-PRP-000
50290AL .....Shim, M5PA/SP5A Differential Bearing To Case (.081"Thick)(2.980"OD)(2.680"ID) 2009-10 .....1 .....41438-PX4-700
50290AM .....Shim, M5PA/SP5A Differential Bearing To Case (.083"Thick)(2.980"OD)(2.680"ID) 2009-10 .....1 .....41439-PX4-700
50290AN.....Shim, M5PA/SP5A Differential Bearing To Case (.085"Thick)(2.980"OD)(2.680"ID) 2009-10 .....1 .....41440-PX4-700
50290AP.....Shim, M5PA/SP5A Differential Bearing To Case (.087"Thick)(2.980"OD)(2.680"ID) 2009-10 .....1 .....41441-PK4-000
50290AQ .....Shim, M5PA/SP5A Differential Bearing To Case (.089"Thick)(2.980"OD)(2.680"ID) 2009-10 .....1 .....41442-PK4-000
50290AR.....Shim, M5PA/SP5A Differential Bearing To Case (.091"Thick)(2.980"OD)(2.680"ID) 2009-10 .....1 .....41443-PK4-000
50290AS.....Shim, M5PA/SP5A Differential Bearing To Case (.093"Thick)(2.980"OD)(2.680"ID) 2009-10 .....1 .....41444-PK4-000
50290AT .....Shim, M5PA/SP5A Differential Bearing To Case (.095"Thick)(2.980"OD)(2.680"ID) 2009-10 .....1 .....41445-PK4-000
50290AU.....Shim, M5PA/SP5A Differential Bearing To Case (.097"Thick)(2.980"OD)(2.680"ID) 2009-10 .....1 .....41446-PK4-000
50290AV .....Shim, M5PA/SP5A Differential Bearing To Case (.099"Thick)(2.980"OD)(2.680"ID) 2009-10 .....1 .....41447-PK4-000
50290AW .....Shim, M5PA/SP5A Differential Bearing To Case (.101"Thick)(2.980"OD)(2.680"ID) 2009-10 .....1 .....41448-PK4-000
50290AX.....Shim, M5PA/SP5A Differential Bearing To Case (.103"Thick)(2.980"OD)(2.680"ID) 2009-10 .....1 .....41449-PK4-000
50290AY .....Shim, M5PA/SP5A Differential Bearing To Case (.105"Thick)(2.980"OD)(2.680"ID) 2009-10 .....1 .....41450-PK4-000
50290AZ.....Shim, M5PA/SP5A Differential Bearing To Case (.107"Thick)(2.980"OD)(2.680"ID) 2009-10 .....1 .....41451-PK4-000
50290AZA.....Shim, M5PA/SP5A Differential Bearing To Case (.109"Thick)(2.980"OD)(2.680"ID) 2009-10 .....1 .....41452-PK4-000
50290AZB.....Shim, M5PA/SP5A Differential Bearing To Case (.111"Thick)(2.980"OD)(2.680"ID) 2009-10 .....1 .....41453-PK4-000
50290AZC .....Shim, M5PA/SP5A Differential Bearing To Case (.113"Thick)(2.980"OD)(2.680"ID) 2009-10 .....1 .....41454-PK4-000
50290AZD .....Shim, M5PA/SP5A Differential Bearing To Case (.115"Thick)(2.980"OD)(2.680"ID) 2009-10 .....1 .....41455-PK4-000
50290AZE.....Shim, M5PA/SP5A Differential Bearing To Case (.117"Thick)(2.980"OD)(2.680"ID) 2009-10 .....1 .....41456-PK4-000
50290AZF.....Shim, M5PA/SP5A Differential Bearing To Case (.119"Thick)(2.980"OD)(2.680"ID) 2009-10 .....1 .....41457-PK4-000
50290AZG .....Shim, M5PA/SP5A Differential Bearing To Case (.121"Thick)(2.980"OD)(2.680"ID) 2009-10 .....1 .....41458-PK4-000
180290BA.....Shim, SMMA Differential Bearing To Case (.049"Thick)(3.333"OD) 2007-08 .....1 .....41441-RRM-000

© Whatever It Takes Transmission Parts. Inc.

PART #	WASHERS AND BEARINGS (Continued)	QTY	REFERENCE #
180290BB	Shim, SMMA Differential Bearing To Case (.051"Thick)(3.333"OD) 2007-08	1	41442-RMM-000
180290BC	Shim, SMMA Differential Bearing To Case (.053"Thick)(3.333"OD) 2007-08	1	41443-RMM-000
180290BD	Shim, SMMA Differential Bearing To Case (.055"Thick)(3.333"OD) 2007-08	1	41444-RMM-000
180290BE	Shim, SMMA Differential Bearing To Case (.057"Thick)(3.333"OD) 2007-08	1	41445-RMM-000
180290BF	Shim, SMMA Differential Bearing To Case (.059"Thick)(3.333"OD) 2007-08	1	41446-RMM-000
180290BG	Shim, SMMA Differential Bearing To Case (.061"Thick)(3.333"OD) 2007-08	1	41447-RMM-000
180290BH	Shim, SMMA Differential Bearing To Case (.063"Thick)(3.333"OD) 2007-08	1	41448-RMM-000
180290BJ	Shim, SMMA Differential Bearing To Case (.065"Thick)(3.333"OD) 2007-08	1	41449-RMM-000
180290BK	Shim, SMMA Differential Bearing To Case (.067"Thick)(3.333"OD) 2007-08	1	41450-RMM-000
180290BL	Shim, SMMA Differential Bearing To Case (.069"Thick)(3.333"OD) 2007-08	1	41451-RMM-000
180290BM	Shim, SMMA Differential Bearing To Case (.071"Thick)(3.333"OD) 2007-08	1	41452-RMM-000
180290BN	Shim, SMMA Differential Bearing To Case (.073"Thick)(3.333"OD) 2007-08	1	41453-RMM-000
180290BP	Shim, SMMA Differential Bearing To Case (.075"Thick)(3.333"OD) 2007-08	1	41454-RMM-000
180290BQ	Shim, SMMA Differential Bearing To Case (.079"Thick)(3.333"OD) 2007-08	1	41455-RMM-000
180290BR	Shim, SMMA Differential Bearing To Case (.081"Thick)(3.333"OD) 2007-08	1	41456-RMM-000
180290BS	Shim, SMMA Differential Bearing To Case (.083"Thick)(3.333"OD) 2007-08	1	41457-RMM-000
180290BT	Shim, SMMA Differential Bearing To Case (.085"Thick)(3.333"OD) 2007-08	1	41458-RMM-000
180290BU	Shim, SMMA Differential Bearing To Case (.087"Thick)(3.333"OD) 2007-08	1	41459-RMM-000
180290BV	Shim, SMMA Differential Bearing To Case (.089"Thick)(3.333"OD) 2007-08	1	41460-RMM-000
180291C	Cup Race, M5PA/SP5A Differential To Bell Housing (.598"Thick)(3.150"OD) (Cast # ECO CR-08A97-1) 2009-10	1	
180292A	Use 180289A	1	
180292B	Use 180289B	1	
180292C	Cone Bearing, M5PA/SP5A Differential To Bell Housing (1.575"ID)(20 Rollers) (Cast # ECO CR08802-2) 2009-10	1	
40298A	Ball Bearing, GNBA/MPCA/M5PA/SMMA/SPCA/SP5A Shift Rod To Case (.235" Thick) (.945"OD)(.472"ID)(Cast # NSK 6901) 2006-11	1	
180299-1A	Ball Bearing, GNBA/MPCA/M5PA/SMMA/SPCA/SP5A Idler Shaft To Case (.707"Thick) (2.440"OD)(.785"ID)(6 Balls)(Cast # 20BC06A12N) 2006-11	1	91005-RPC-016
180299A	Roller Bearing, GNBA/MPCA/M5PA/SMMA/SPCA/SP5A Idler Shaft To Rear Cover (.745"Thick)(2.050"OD)(12 Rollers) 2006-Up	1	91102-RPC-003

PART #	ELECTRICAL COMPONENTS	QTY	REFERENCE #
180410A	Neutral Safety Switch, GNBA/MPCA/SPCA (10 Blade Connector)(1/2 Aluminum, 1/2 Plastic) 2006-11	1	28900-RPC-013
180410B	Neutral Safety Switch, M5PA/SMMA/SP5A (10 Blade Connector)(All Plastic) 2007-10	1	28900-RR4-305
180411A	Switch, GNBA/MPCA/SMMA/SPCA Pressure (1 Blade, Square, Brown Connector)(On Front Top Of Rear Cover) 2006-11	1	28600-RPC-004
180411C	Switch, M5PA/SP5A Pressurer (1 Blade, Oval, Brown Connector)(On Front Top Of Rear Cover) 2009-10	1	28600-RG5-004
180412A	Switch, GNBA/MPCA/SMMA/SPCA Pressure (1 Blade, Square, Yellow Connector) 2006-11	1	28600-RPC-003
180412C	Switch, M5PA/SP5A Pressure (1 Blade, Oval, Yellow Connector) 2009-10	1	
180421A	Solenoid, GNBA/MPCA/M5PA/SMMA/SPCA/SP5A Shift "B"(Internal)(W/Brown Connector) (3.155" Long) 2006-11 (Also Fits GNBA/MPCA/M5PA/SMMA/SPCA/SP5A # 422 2006-11)	1-2	28500-RPC-003
180422A	Use 180421A	1	
180423A	Solenoid, GNBA/MPCA/M5PA/SMMA/SPCA/SP5A Shift "A" (Internal)(W/Black Connector) (3.490" Long) 2006-11 (Also Fits GNBA/MPCA/M5PA/SMMA/SPCA/SP5A # 427 2006-11)	1-2	28400-RPC-003
180425C	Solenoid, M5PA/SP5A Linear (Single W/4 Bolt Aluminum Housing) 2009-10	1	28250-R90-003
50425A	Solenoid, GNBA/MPCA/SMMA/SPCA (# 425) 2006-11 (Single W/4 Bolt Aluminum Houisng)	1	28250-PRP-013
180427A	Use 180423A	1	
180431A	Solenoid W/Housing, GNBA/MPCA/SPCA Linear "B" (2 Solenoids W/Aluminum Housing) (Bolts On Side Of Case) 2006-11	1	28260-RPC-004
180431B	Solenoid W/Housing, M5PA/SMMA/SP5A Linear "B" (2 Soleniods W/Aluminum Housing) (Bolts On Side Of Case) 2007-10	1	28260-RG5-004
180436A	Sensor, GNBA/MPCA/M5PA/SMMA/SPCA/SP5A (On The Side, Rear Of Case)(1.920" Overall Length) 2006-11	1	28820-RPC-003
180438A	Sensor, GNBA/MPCA/M5PA/SMMA/SPCA/SP5A (On The Side, Front Of Case)(2.990" Overall Length) 2006-11	1	28810-RPC-003
180444A	Case Connector, GNBA/MPCA/SPCA W/Temperature Sensor & 4 Solenoid Connectors 2006-11	1	28360-RPC-003
180444B	Case Connector, M5PA/SMMA/SP5A W/Temperature Sensor & 4 Solenoid Connector 2007-10	1	28360-RMM-003
180445A	Wire Harness, GNBA/MPCA/SPCA External (12 1/8"Long)(With 10 Wires, 1 Wire Is Yellow/Red) 2006-11	1	28950-RPC-000
180445B	Wire Harness, M5PA/SMMA/SP5A External (12 3/8"Long)(With 10 Wires, 1 Wire Is Solid Yellow) 2007-10	1	28950-RR4-000

© Whatever It Takes Transmission Parts. Inc.

PART #	MISCELLANEOUS COMPONENTS	QTY	REFERENCE #
180489A	Cover, GNBA/MPCA/M5PA/SMMA/SPCA/SP5A Neutral Safety Switch (Cast # RPC)(Plastic) 2006-11	1	21720-RPC-000
30492A	Drain Plug, GNBA/MPCA/M5PA/SMMA/SPCA/SP5A	1	90081-PX4-003
180493A	Dip Stick, GNBA/MPCA/SPCA (10 5/8"Long)(Goes In Case) 2006-11	1	25610-PRM-013
180493B	Dip Stick, M5PA/SMMA/SP5A (11 7/8"Long)(Goes In Solenoid Cover) 2007-10	1	25610-RG5-003

PART #	HARDPARTS	QTY	REFERENCE #
180529A	Tube, GNBA/MPCA/M5PA/SMMA/SPCA/SP5A Stator (3.830"Long) 2006-11	1	25155-RPC-000
50529-1A	Dowel Pin, GNBA/MPCA/M5PA/SMMA/SPCA/SP5A Stator Tube Stop (.313"OD)(3.145"Long) 2006-11	1	90701-PK4-000
60530C	Pump Gears, GNBA/MPCA/M5PA/SMMA/SPCA/SP5A (38 Spline Gear)(28 Teeth)(.470" Thick)	1	
80535	PIN, GNBA/MPCA/M5PA/SMMA/SPCA/SP5A 2006-11	1	25145-PA9-010
180550A	Drum, GNBA/MPCA/SPCA 2nd/4th Clutch (2.733"Wide)(5.235"OD) 2006-11	1	22610-RPC-004
180550B	Drum, M5PA/SMMA/SP5A 2nd/4th Clutch (2.610"Wide)(5.235"OD) 2007-10	1	22610-RMM-004
180551A	Drum, GNBA/MPCA/M5PA/SMMA/SPCA SP5A 3rd/5th Clutch (2.650"Wide)(5.125"OD) 2006-11	1	22651-RPC-003
180554A	Drum, GNBA/MPCA/M5PA/SMMA/SPCA/SP5A 1st Clutch (1.025"ID Of Bore)(6 Clutch) 2006-11	1	22510-RPC-003
180560A	Piston Kit, GNBA/MPCA/M5PA/SMMA/SPCA/SP5A 4th Clutch 2006-11 (Also Fits GNBA/MPCA/M5PA/SMMA/SPCA/SP5A 2nd Clutch # 562 2006-11)	1-2	
180561A	Piston Kit, GNBA/MPCA/M5PA/SMMA/SPCA/SP5A 5th Clutch 2006-11 (Also Fits GNBA/MPCA/M5PA/SMMA/SPCA/SP5A 3rd Clutch # 565)	1-2	
180562A	Use 180560A	1	
180565A	Use 180561A	1	
180567A	Piston Kit, GNBA/MPCA/M5PA/SMMA/SPCA/SP5A 1st Clutch (W/Bonded Retainer) 2006-11	1	
180672A	Mainshaft, GNBA/MPCA/M5PA/SMMA/SPCA/SP5A (13 1/2"Long)(Flange Is .139"Thick) (2.570"OD)(Uses 3 O-Rings On the Rear & 4 Teflon Rings On The Front) 2006-11	1	23210-RPC-000
180675A	Secondary Shaft, M5PA/SPCA/SP5A (11 1/4"Long)(.175"Thick Flange) 2006-11	1	23230-RG5-000
180675AA	Secondary Shaft, GNBA/MPCA/SMMA/SPCA (11 1/4"Long)(.175"Thick Flange) 2006-11	1	23230-RPC-000
180676A	Countershaft, MPCA/SPCA (10 7/8"Long)(16 Teeth, No Groove) 2006-11	1	23221-RPC-000
180676B	Countershaft, SMMA (10 7/8"Long)(16 Teeth, 2 Groove) 2007-08	1	23221-RMM-000
180676C	Countershaft, SP5A (10 7/8"Long)(16 Teeth, 3 Grooves, 1 On Each Side & 1 In The Middle) 2009-10	1	23221-RGO-000
180676CA	Countershaft, M5PA (10 7/8"Long) (3 Grooves Next To Bearing) 2009-10	1	
180676D	Countershaft, GNBA (10 7/8"Long) (16 Teeth, 2 Grooves, 1 On Each Edge) 2006-11	1	
180679A	Shaft, GNBA/MPCA/SMMA/SPCA Idler (3.488"Long)(.153"Thick Flange) 2006-11	1	23516-RPC-000
180679C	Shaft, M5PA/SP5A Idler (3.488" Long)(.233"Thick Flange) 2009-10	1	23516-RG5-000
180689A	Oil Guide, GNBA/MPCA/M5PA/SMMA/SPCA/SP5A Countershaft To Bell Housing (Tin) (.026"Thick)(2.315"OD) 2006-11	1	23255-RPC-000
180690A	Park Gear, GNBA/MPCA/M5PA/SMMA/SPCA/SP5A (11 Lugs)(.523"Thick)(4.010"ID) 2006-11	1	23427-RPC-000
40694A	Retainer, GNBA/MPCA/M5PA/SMMA/SPCA/SP5A (# 694-1) (Secondary Shaft) (.135"Thick) (2.100"OD)(1.825"ID)	1	90433-RDK-000
50694A	Retainer, GNBA/MPCA/M5PA/SMMA/SPCA/SP5A Holds Horse Shoe Clips To Idler Shaft (.101"Thick)(1.060"OD)(.789"ID) 2006-11	1	90432-PRP-000
180695A	Oil Baffle, GNBA/MPCA/SMMA/SPCA Differential Housing To Bell Housing (.040"Thick) (3.538"OD)(1.623"ID)(W/1 Large Tab) 2006-11	1	41381-RPC-000
180695C	Oil Baffle, M5PA/SP5A Differential Housing To Bell Houisng (.040"Thick)(3.120"OD)(1.615"ID) (W/1 Large Tab) 2009-10	1	41381-RLM-000
180697A	Oil Guide Collar, GNBA/MPCA/M5PA/SMMA/SPCA/SP5A In Bell Housing Under Roller Bearing # 238 (Aluminum)(1.535"OD)(W/2 Ears)(Uses 2 O-Rings) 2006-Up	1	23235-RPC-000
180698A	Spacer, GNBA/MPSA/SMMA/SPCA Differential To Case (.040"Thick)(3.538"OD)(1.623"ID) (Stepped) 2006-11	1	41382-RPC-000
180698C	Spacer, M5PA/SP5A Differential To Case (.039"Thick)(2.993"OD)(1.615"ID)(1 Long Tab)(Flat) 2009-10	1	41382-RLM-000
180710A	Gear, MPCA/SPCA Idle (Mainshaft)(39 Teeth, No Groove) 2006-11	1	23511-RPC-000
180710B	Gear, SMMA/SP5A Idle (Mainshaft)(39 Teeth, 1 Groove On The Edge) 2007-10	1	
180710C	Gear, MP5A Idle (Mainshaft)(39 Teeth, 2 Grooves, 1 On Each Edge) 2009-10	1	
180710D	Gear, GNBA Idle (Mainshaft)(39 Teeth, 2 Grooves On 1 Edge) 2006-11	1	
180712A	Gear, MPCA/SPCA Idler (Secondary Shaft) (33 Teeth, No Groove) 2006-11	1	23521-RPC-010
180712B	Gear, M5PA/SMMA/SP5A Idler (Secondary Shaft)(33 Teeth, 1 Groove) 2007-10	1	
180712D	Gear, GNBA Idler (Secondary Shaft)(33 Teeth, 2 Groove) 2006-11	1	
180714A	Gear, MPCA/SPCA Idler (29 Teeth, No Groove)(44 Teeth, No Groove) 2006-11	1	23515-RPC-010
180714B	Gear, SMMA/SP5A Idler (29 Teeth, 1 Groove)(44 Teeth, No Groove) 2007-10	1	23515-RPC-020
180714C	Gear, M5PA Idler (29 Teeth)(44 Teeth, 2 Groove) 2009-10	1	23515-RPC-030
180714D	Gear, GNBA Idler (29 Teeth, 2 Groove)(44 Teeth) 2006-11	1	
180716A	Differential Housing, GNBA/MPCA/SMMA/SPCA (W/10 Threaded Bolt Holes) 2006-11	1	41100-RPC-000

© Whatever It Takes Transmission Parts. Inc.

PART #	HARDPARTS (Continued)	QTY	REFERENCE #
180716C	Differential Housing, M5PA/SP5A (W/10 Threaded Bolt Holes) 2009-10 (Can Use 180716A)	1	41100-RPC-010
180720A	Differential Ring Gear, MPCA (72 Teeth, 1 Groove) 2006-11	1	41233-RPC-000
180720AA	Differential Ring Gear, SPCA (71 Teeth, No Groove) 2006-Up	1	
180720B	Differential Ring Gear, SMMA (73 Teeth, 2 Groove) 2007-08	1	41233-RMM-000
180720C	Differential Ring Gear, SP5A (73 Teeth, 3 Groove, 1 In Center & 1 On Each Edge) 2009-10	1	41233-RLM-000
180720CA	Differential Ring Gear, M5PA (73 Teeth, 3 Groove, On Housing Side) 2009-10	1	41233-RGO-000
180720D	Differential Ring Gear, GNBA (71 Teeth, 2 Groove) 2006-11	1	
180740A	Valve Body, GNBA/MPCA/M5PA/SMMA/SPCA/SP5A (Less Gears)(Cast # RPC) 2006-11	1	
180746A	Separator Plate, GNBA/MPCA M5PA/SMMA/SPCA/SP5A Servo Body To Valve Body 2006-11	1	27412-RPC-000
180747A	Plate, GNBA/MPCA/M5PA/SMMA/SPCA/SP5A Valve Body 2006-11	1	
180750A	Bell Housing, GNBA/MPCA/SPCA (2wd) (Cast # RPC) 2006-11	1	21111-RPC-307
180750B	Bell Housing, SMMA (2wd)(Cast # RMM) 2007-08	1	21111-RMM-315
180750C	Bell Housing, M5PA/SP5A (2wd)(Cast # RGO) 2009-10	1	21111-RP5-306
180757A	Solenoid Cover, GNBA/MPCA/SPCA (Aluminum 9 Bolt)(Cast # RPC) 2006-11	1	28450-RPC-000
180757B	Solenoid Cover, SMMA (Aluminum, 8 Bolt W/Dip Stick Hole)(Cast# RMM) 2007-08	1	28450-RMM-000
180757C	Solenoid Cover, M5PA/SP5A (Aluminum, 8 Bolt W/Dip Stick Hole)(Cast # RG5) 2009-10	1	28450-RG5-000
180759A	Rear Cover, GNBA/MPCA/SPCA (Cast # RPC) 2006-11	1	21240-RPC-000
180759B	Rear Cover, M5PA/SMMA/SP5A (Cast # RMM) 2007-10	1	21240-RMM-000
180760A	Case, GNBA/MPCA/SPCA (9 Bolt Solenoid Cover)(Cast # RPC)(Has The Dip Stick In The Case) 2006-11	1	21210-RPC-000
180760B	Case, SMMA (Uses A 8 Bolt Solenoid Cover W/Dip Stick Hole)(Cast# RMM) 2007-08	1	21210-RMM-000
180760C	Case, M5PA/SP5A (Uses A 8 Bolt Solenoid Cover W/Dip Stick Hole)(Cast # RGO) 2009-10	1	21210-RGO-000
180776AK	Bolt Set, MPCA/SPCA Bell Housing To Case (19 Pieces) 2006-11	1	
180776BK	Bolt Set, SMMA Bell Housing To Case (19 Pieces) 2007-08	1	
180776CK	Bolt Set, M5PA/SP5A Bell Houisng To Case (19 Pieces) 2009-10	1	
180776DK	Bolt Set, GNBA Bell Housing To Case (19 Pieces) 2006-11	1	
180780AK	Bolt Set, GNBA/MPCA/M5PA/SMMA/SPCA/SP5A Rear Cover To Case (17 Pieces) 2006-11	1	
180786AK	Bolt Set, GNBA/MPCA/M5PA/SMMA/SPCA/SP5A Differential Ring Gear (10 Pieces) 2006-11	1	
180795A	Nut, GNBA/MPCA/M5PA/SMMA/SPCA/SP5A Mainshaft (Right Hand Thread)(32mm) 2006-11	1	90203-RPC-000
180796A	Use 40796A	1	
40796A	Nut,GNBA/MPCA/M5PA/SMMA/SPCA/SP5A (#796 & # 797)(Left Hand Thread)(.515”Thick) 2006-11	1-2	90201-PRP-000
180797A	Use 40796A	1	
180801A	Gear, SPCA 1st (Countershaft)(54 Teeth, No Groove) 2006-11	1	23421-RPC-010
180801AA	Gear, MPCA 1st (Countershaft)(54 Teeth, 1 Groove) 2006-11	1	
180801B	Gear, SMMA 1st (Countershaft)(53 Teeth, 2 Groove) 2007-08	1	23421-RMM-000
180801C	Gear, M5PA/SP5A 1st (Countershaft)(53 Teeht, 1 Groove) 2009-10	1	23421-RG5-000
180801D	Gear, GNBA 1st (Countershaft)(54 Teeth, 2 Groove) 2006-11	1	
180802A	Gear, MPCA/SPCA 1st (Secondary Shaft)(26 Teeth, 1 Groove) 2006-08	1	23411-RPC-010
180802AA	Gear, MPCA/SPCA 1st (Secondary Shaft)(26 Teeth, No Groove) 2008-11	1	23411-RPC-020
180802B	Gear, SMMA 1st (Secondary Shaft)(24 Teeth, 2 Grooves) 2007-08	1	23411-RMM-000
180802C	Gear, M5PA/SP5A 1st (Secondary Shaft)(24 Teeth, 1 Groove) 2009-10	1	23411-RG5-000
180802D	Gear, GNBA 1st (Secondary Shaft)(26 Teeth, 2 Grooves) 2006-11	1	
180803A	Gear, MPCA/SPCA 2nd (Secondary Sahft)(41 Teeth, No Groove) 2006-11	1	23431-RPC-000
180803B	Gear, SMMA 2nd (Secondary Shaft)(39 Teeth, 1 Groove) 2007-08	1	23431-RMM-000
180803C	Gear, M5PA/SP5A 2nd (Secondary Shaft)(39 Teeth, No Groove) 2009-10	1	23431-RG5-000
180803D	Gear, GNBA 2nd (Secondary Shaft)(41 Teeth, 2 Groove) 2006-11	1	
180804A	Gear, MPCA/SPCA 2nd (Countershaft)(49 Teeth, No Groove) 2006-11	1	23441-RPC-000
180804B	Gear, SMMA 2nd (Countershaft)(51 Teeth, 2 Grooves) 2007-08	1	23441-RMM-000
180804C	Gear, M5PA/SP5A 2nd (Countershaft)(51 Teeth, 1 Groove) 2009-10	1	23441-RG5-000
180804D	Gear, GNBA 2nd (Countershaft)(49 Teeth, 2 Grooves) 2006-11	1	
180806A	Gear, MPCA/SPCA 3rd (Mainshaft)(46 Teeth, No Groove) 2006-11	1	23455-RPC-000
180806B	Gear, M5PA/SMMA/SP5A 3rd (Mainshaft)(45 Teeth, 3 Groove) 2007-10	1	23455-RPC-J00
180806D	Gear, GNBA 3rd (Mainshaft)(46 Teeth, 2 Groove) 2006-11	1	
180807A	Gear, MPCA/SPCA 3rd (Countershaft)(47 Teeth, No Groove) 2006-11	1	23451-RPC-000
180807B	Gear, M5PA/SMMA/SP5A 3rd (Countershaft)(48 Teeth, 1 Groove) 2007-10	1	23451-RPC-J00
180807D	Gear, GNBA 3rd (Countershaft)(47 Teeth, 2 Groove) 2006-11	1	
180810A	Gear, MPCA/SPCA 5th (Countershaft)(32 Teeth, No Groove) 2006-11	1	23491-RPC-000
180810B	Gear, SMMA 5th (Countershaft)(32 Teeth, 1 Groove) 2007-08	1	23491-RPC-J00
180810C	Gear, SP5A 5th (Countershaft)(32 Teeth, 2 Grooves In Middle) 2009-10	1	
180810CA	Gear, M5PA/SP5A 5th (Countershaft)(32 Teeth, 3 Groove) 2009-10	1	23491-RG5-000
180810D	Gear, GNBA 5th (Countershaft)(32 Teeth, 2 Grooves On The Edge) 2006-11	1	
180811A	Gear, MPCA/SPCA 4th (Secondary Shaft) (57 Teeth, No Groove) 2006-11	1	23461-RPC-000
180811B	Gear, SMMA 4th Secondary Shaft)(54 Teeth, No Groove) 2007-08	1	23461-RPC-J00
180811C	Gear, SP5A 4th (Secondary Shaft)(54 Teeth, 2 Groove) 2009-10	1	23461-RG5-000
180811CA	Gear, M5PA 4th (Secondary Shaft)(54 Teeth, 3 Groove) 2009-10	1	
180811D	Gear, GNBA 4th (Secondary Shaft)(57 Teeth, 2 Groove) 2006-11	1	
180812A	Gear, MPCA/SPCA 5th (Mainshaft)(61 Teeth, No Groove) 2006-11	1	23481-RPC-000

© Whatever It Takes Transmission Parts. Inc.

180812B	Gear, SMMA 5th (Mainshaft)(60 Teeth, 1 Groove) 2007-08	1	23481-RMM-000
180812C	Gear, SP5A 5th (Mainshaft)(58 Teeth, 2 Groove) 2009-10	1	23481-RG5-000
180812CA	Gear, M5PA 5th (Mainshaft)(58 Teeth, 3 Groove) 2009-10	1	
180812D	Gear, GNBA 5th (Mainshaft)(61 Teeth, 2 Grooves) 2006-11	1	
180816A	Gear, GNBA/MPCA/M5PA/SMMA/SPCA/SP5A Reverse (Countershaft)(45 Teeth)(.710"Thick) (3.700"OD)(1.650"ID) 2006-11	1	23531-RPC-000
180818A	Gear, GNBA/MPCA/M5PA/SMMA/SPCA/SP5A Reverse Idler (35 Teeth)(2.975"OD)(.785"ID) 2006-11	1	
180819A	Shaft, GNBA/MPCA/M5PA/SMMA/SPCA/SP5A Reverse Idler Gear (1.690"Long)(Uses 2 O-Rings) 2006-11	1	23542-P6H-000
180820A	Bracket, GNBA/MPCA/M5PA/SMMA/SPCA/SP5A Holds Reverse Idler In Case (Cast Iron) (2 Bolt) 2006-11	1	21215-RPC-000
180830A	Selector, GNBA/MPCA/M5PA/SMMA/SPCA/SP5A Reverse (.665"Thick)(2.630"OD) 2006-11	1	23565-RPC-000
80835A	Hub, GNBA/MPCA/M5PA/SMMA/SPCA/SP5A Reverse Selector (24 Outer Splines)(1.155"Thick) 2006-11	1	23566-RPC-000
180840A	Fork, GNBA/MPCA/M5PA/SMMA/SPCA/SP5A Reverse Shift 2006-11	1	24111-RPC-000
180850A	Cushion, GNBA/MPCA/M5PA/SMMA/SPCA/SP5A 4th Clutch (.067"Thick)(4.540"OD)(Waved) 2006-11 (Also Fits GNBA/MPCA/M5PA/SMMA/SPCA/SP5A 2nd Clutch # 852 2006-11)	1-2	22536-RCT-014
180851A	Cushion, GNBA/MPCA/M5PA/SMMA/SPCA/SP5A 5th Clutch (.071"Thick)(3.930"OD) (Slight Waved .120"High) 2006-11 (Also Fits GNBA/MPCA/M5PA/SMMA/SPCA/SP5A 3rd Clutch # 858)	1-2	22537-RPC-003
180852A	Use 180850A	1	
180853A	Cushion, GNBA/MPCA/M5PA/SMMA/SPCA/SP5A 1st Clutch (.071"Thick)(3.915"OD) (Heavy Waved .147"High) 2006-11	1	22436-RPC-003
180858A	Use 180851A	1	
180861A	Snap Ring, GNBA/MPCA/M5PA/SMMA/SPCA/SP5A Holds 4th Clutch Pressure Plate In (.079"Thick)(5.210"OD) 2006-11 (Also Fits GNBA/MPCA/M5PA/SMMA/SPCA/SP5A # 873)	1-2	90605-RCT-004
180862A	Snap Ring, GNBA/MPCA/M5PA/SMMA/SPCA/SP5A Holds 4th Clutch Spring Retainer In (.059"Thick)(1.830"OD) 2006-11 (Also Fits GNBA/MPCA/M5PA/SMMA/SPCA/SP5A 2nd Clutch # 874 2006-11)	1-2	90603-RPC-004
180864A	Use 80861	1	
80861	Snap Ring, GNBA/MPCA/M5PA/SMMA/SPCA/SP5A (#864 & #878)(.069"Thick)(5.070"OD)	1	90605-PX4-000
180865A	Snap Ring, GNBA/MPCA/M5PA/SMMA/SPCA/SP5A Holds 5th Clutch Spring Retainer In (.058"Thick)(1.860"OD) 2006-Up (Also Fits GNBA/MPCA/M5PA/SMMA/SPCA/SP5A 3rd Clutch # 871)	1-2	90603-RPC-003
80870	Snap Ring, GNBA/MPCA/MP5A/SMMASPCA/SP5A Holds Bearing In Stator (Front)	1	
180871A	Use 180865A	1	
180873A	Use 180861A	1	
180874A	Use 180862A	1	
180876A	Snap Ring, GNBA/MPCA/M5PA/SMMA/SPCA/SP5A Holds 1st Clutch Pressure Plate In (.072"Thick)(4.505"OD) 2006-11	1	90605-PA9-000
180877A	Snap Ring, GNBA/MPCA/M5PA/SMMA/SPCA/SP5A Holds 1st Clutch Return Spring In (.060"Thick)(1.622"OD) 2006-11	1	90602-RPC-003
180878A	Use 80861	1	
60879C	Snap Ring, GNBA/MPCA/M5PA/SMMA/SPCA/SP5A Holds Caged Bearing To Mainshaft	1	
180880A	Use 60884CA	1	
60884C	Snap Ring, GNBA/MPCA/M5PA/SMMA/SPCA/SP5A (#880)	1	90609-PC8-000
180881A	Snap Ring, GNBA/MPCA/M5PA/SMMA/SPCA/SP5A Holds 1st Clutch Drum To Secondary Shaft (.046"Thick)(1.158"OD) 2006-11	1	90621-RPC-000
180886A	Snap Ring, GNBA/MPCA/M5PA/SMMA/SPCA/SP5A Holds Horse Shoe Clip Retainer To Countershaft (.039"Thick)(1.275"OD) 2006-11	1	90616-RPC-000
180887A	Horse Shoe Clips, GNBA/MPCA/M5PA/SMMA/SPCA/SP5A Counter Shaft (.079"Thick) (1.530"Long)(2 Per Pack) 2006-11	1	90431-RPC-000
180888A	Use 40886A	1	
40886A	Snap Rg, GNBA/MPCA/M5PA/SMMA/SPCA/SP5A (# 888) 2006-11 (.048"Thick)(1.865"OD)	1	90608-RDK-000
180890A	Snap Ring, GNBA/MPCA/M5PA/SMMA/SPCA/SP5A Holds Countershaft Ball Bearing To Case (.077"Thick)(3.195"OD)(Bent Ends) 2006-11	1	90612-RPC-000
180895A	Use 50899A	1	
50897A	Horse Shoe Clips,GNBA/MPCA/M5PA/SMMA/SPCA/SP5A Idler Shaft (.056"Thick)(.970"Long) (2 Per Pack) 2006-11	1	90431-PRP-000
180898A	Snap Ring, GNBA/MPCA/M5PA/SMMA/SPCA/SP5A Holds Idler Shaft Ball Bearing To Case (.077"Thick)(2.545"OD)(W/2 Bent Ends) 2006-11	1	90603-PB6-000
50899A	Snap Ring, GNBA/MPCA/M5PA/SMMA/SPCA/SP5A (# 895 & #899)(.047"Thick)(1.88"OD) (W/2 Eyelets) 2006-11	1	94510-20000
180900A	Accumulator, GNBA/MPCA/M5PA/SMMA/SPCA/SP5A W/Pistons (Cast # RPC) 2006-11	1	
180924-3A	Separator Plate, GNBA/MPCA/M5PA/SMMA/SPCA/SP5A Regulator Body To Valve Body 2006-11	1	27212-RPC-000
180924A	Regulator Body, GNBA/MPCA/M5PA/SMMA/SPCA/SP5A (Cast # RPC)(Less Plate) 2006-11	1	27200-RPC-000

© Whatever It Takes Transmission Parts. Inc.

PART #	HARDPARTS	QTY	REFERENCE #
180960A	Piston, GNBA/MPCA/M5PA/SMMA/SPCA/SP5A 4th Clutch (.343"Thick At The Edge)(4.710"OD) 2006-11 (Also Fits GNBA/MPCA/M5PA/SMMA/SPCA/SP5A 2nd Clutch # 962 2006-11)	1-2	22530-RPC-004
180961A	Piston, GNBA/MPCA/M5PA/SMMA/SPCA/SP5A 5th Clutch (.337"Thick)(4.550"OD) 2006-11 (Also Fits GNBA/MPCA/M5PA/SMMA/SPCA/SP5A 4th Clutch # 965)	1-2	22670-RPC-003
180962A	Use 180960A.	1	
180965A	Use 180961A.	1	
180967A	Piston, GNBA/MPCA/M5PA/SMMA/SPCA/SP5A 1st Clutch (.552"Thick At The Edge) (4.160"OD)(1.455"ID) 2006-11	1	22521-RPC-003
180970A	Spring, GNBA/MPCA/M5PA/SMMA/SPCA/SP5A 4th Clutch Return (1.560"Tall)(2.555"OD) 2006-11 (Also Fits GNBA/MPCA/M5PA/SMMA/SPCA/SP5A 2nd Clutch # 972 2006-11)	1-2	22541-RPC-004
180971A	Spring, GNBA/MPCA/M5PA/SMMA/SPCA/SP5A 5th Clutch Return (1.690"Tall)(2.593"OD) 2006-11 (Also Fits GNBA/MPCA/M5PA/SMMA/SPCA/SP5A 3rd Clutch # 975)	1-2	22542-RPC-003
180972A	Use 180970A.	1	
180975A	Use 180971A.	1	
180977A	Spring, GNBA/MPCA/M5PA/SMMA/SPCA/SP5A 1st Clutch Return (1.430"Tall)(2.170"OD) 2006-11	1	22541-RPC-003
180980A	Retainer, GNBA/MPCA/M5PA/SMMA/SPCA/SP5A 4th Clutch Spring (.167"Thick)(2.618"OD) (1.745"ID) 2006-11 (Also Fits GNBA/MPCA/M5PA/SMMA/SPCA/SP5A 2nd Clutch # 982 2006-11)	1-2	22633-RPC-004
180981A	Retainer, GNBA/MPCA/M5PA/SMMA/SPCA/SP5A 5th Clutch Spring (.160"Thick)(2.593"OD) (1.783"ID) 2006-11 (Also Fits GNBA/MPCA/M5PA/SMMA/SPCA/SP5A 3rd Clutch # 985)	1-2	22633-RPC-003
180982A	Use 180980A.	1	
180985A	Use 180981A.	1	
180987A	Piston/Retainer, GNBA/MPCA/M5PA/SMMA/SPCA/SP5A 1st Clutch Return Spring (Bonded) (.735"Thick)(3.560"OD)(1.425"ID) 2006-11	1	22533-RPC-003
180991-4A	Shift Rod, GNBA/MPCA/SPCA (18 3/4"Long) 2006-11	1	24410-RPC-000
180991-4B	Shift Rod, M5PA/SMMA/SP5A (18 3/4"Long) 2007-10	1	24410-RMM-000
180995A	Park Pawl Assembley, GNBA/MPCA/SPCA 2006-11	1	
180995B	Park Pawl Assembly, M5PA/SMMA/SP5A 2007-10	1	
50999-4A	Tube,GNBA/MPCA/M5PA/SMMA/SPCA/SP5A Solenoid Housing To Regulator Body (No Screen)(1.375"Long) 2006-11	1	22749-PW4-000
50999-5A	Tube,GNBA/MPCA/M5PA/SMMA/SPCA/SP5A Solenoid Housing To Regulator Body (Screened)(1.400"Long) 2006-11	6	22760-PPW-000
180999A	Tube Set, GNBA/MPCA/SMMA/SPCA Regulator Body To Case & Bell Housing (6 Pieces) 2006-11	1	
180999C	Tube Set, M5PA/SP5A Regulator Body To Case & Bell Housing (6 Pieces) 2009-10	1	

© Whatever It Takes Transmission Parts. Inc.

© Whatever It Takes Transmission Parts. Inc.

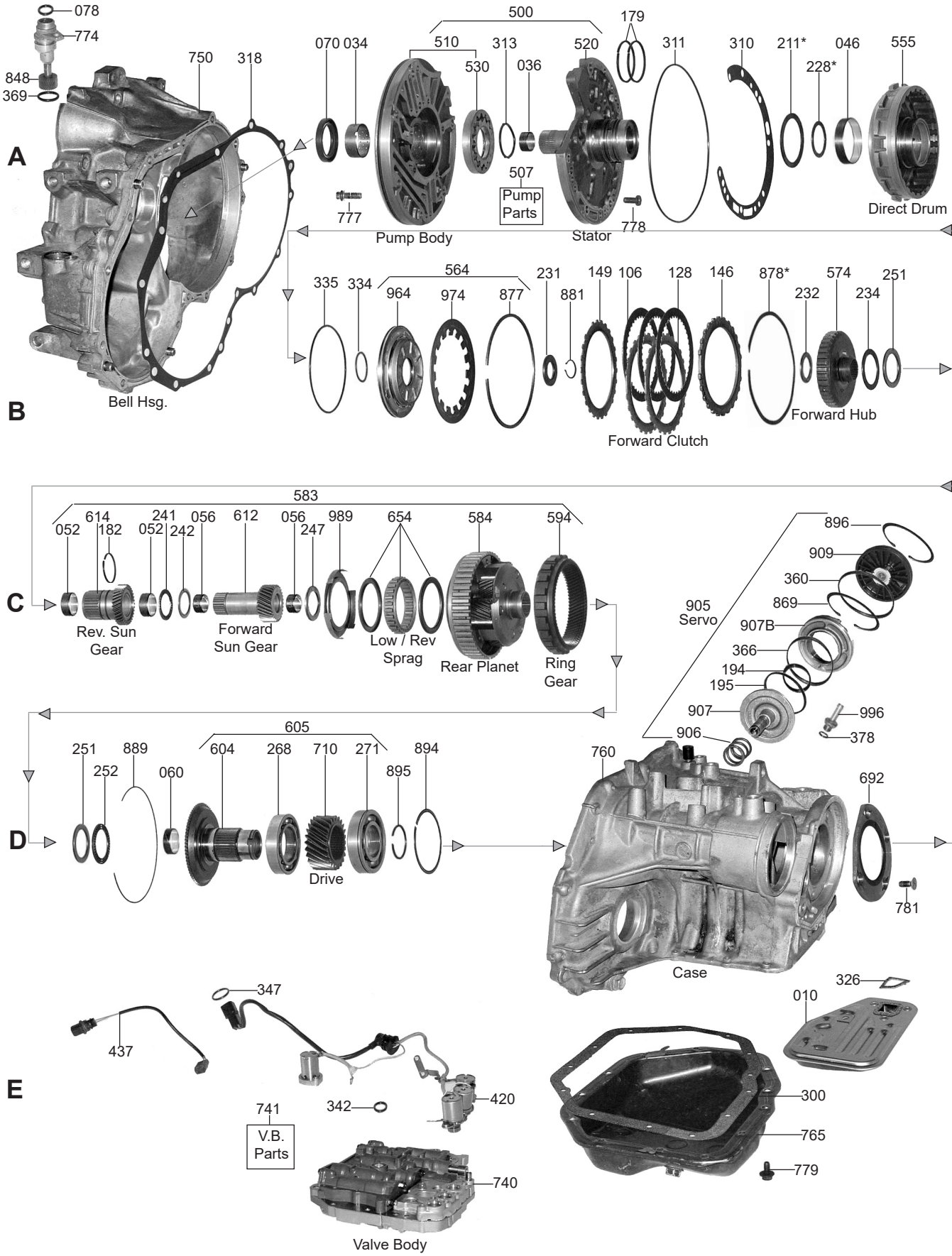

000 Paper & Rubber Kit

002 Overhaul Kit

004 Master L/ Steels Kit

006 Master W/ Steels Kit

011 Filter Kit

030 Bushing Kit

119 Friction Module

165 Valve Body Kits

175 Ring Kits

400 Technical Manuals

© Whatever It Takes Transmission Parts. Inc.

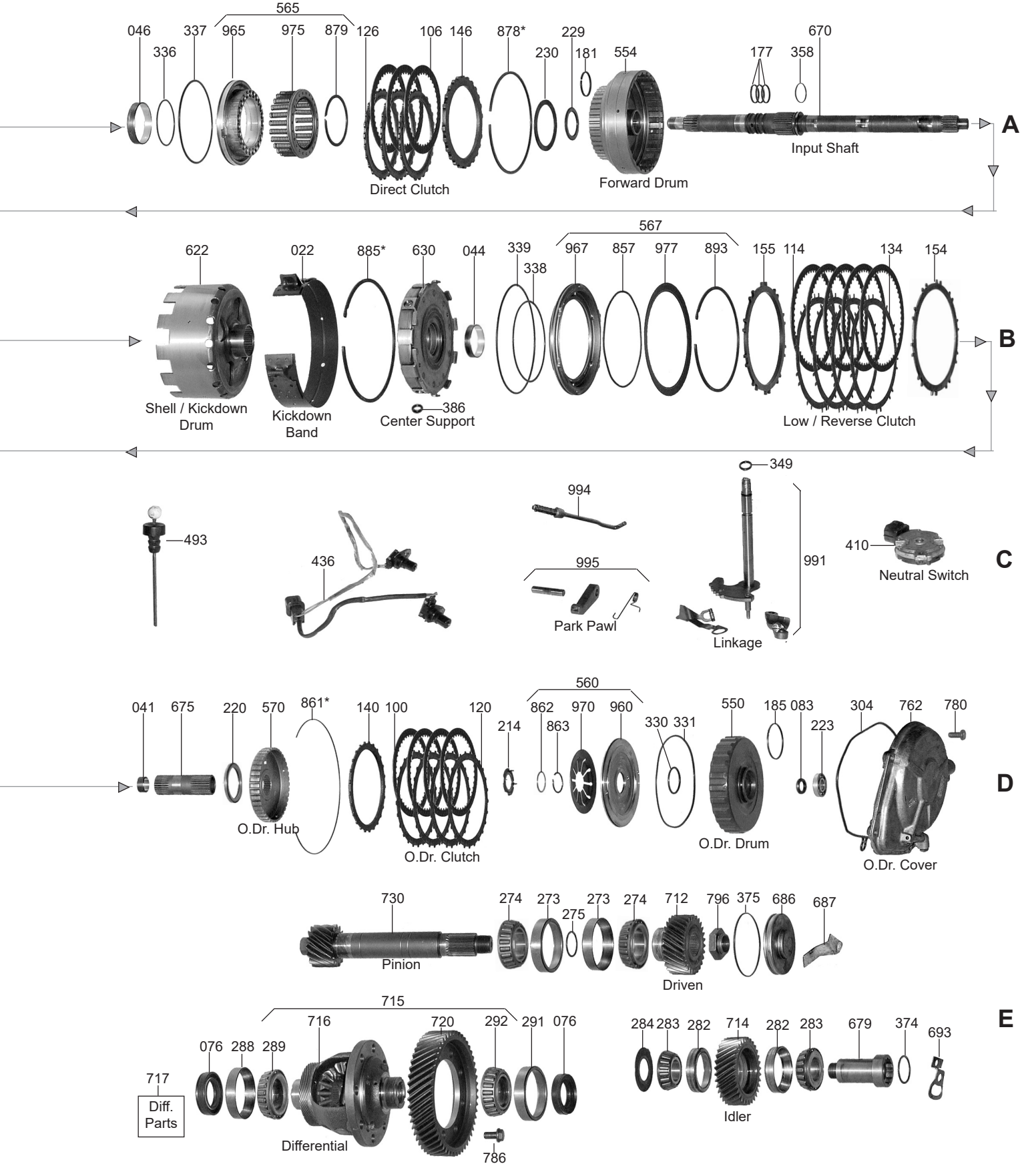

MITSUBISHI

© Whatever It Takes Transmission Parts. Inc.

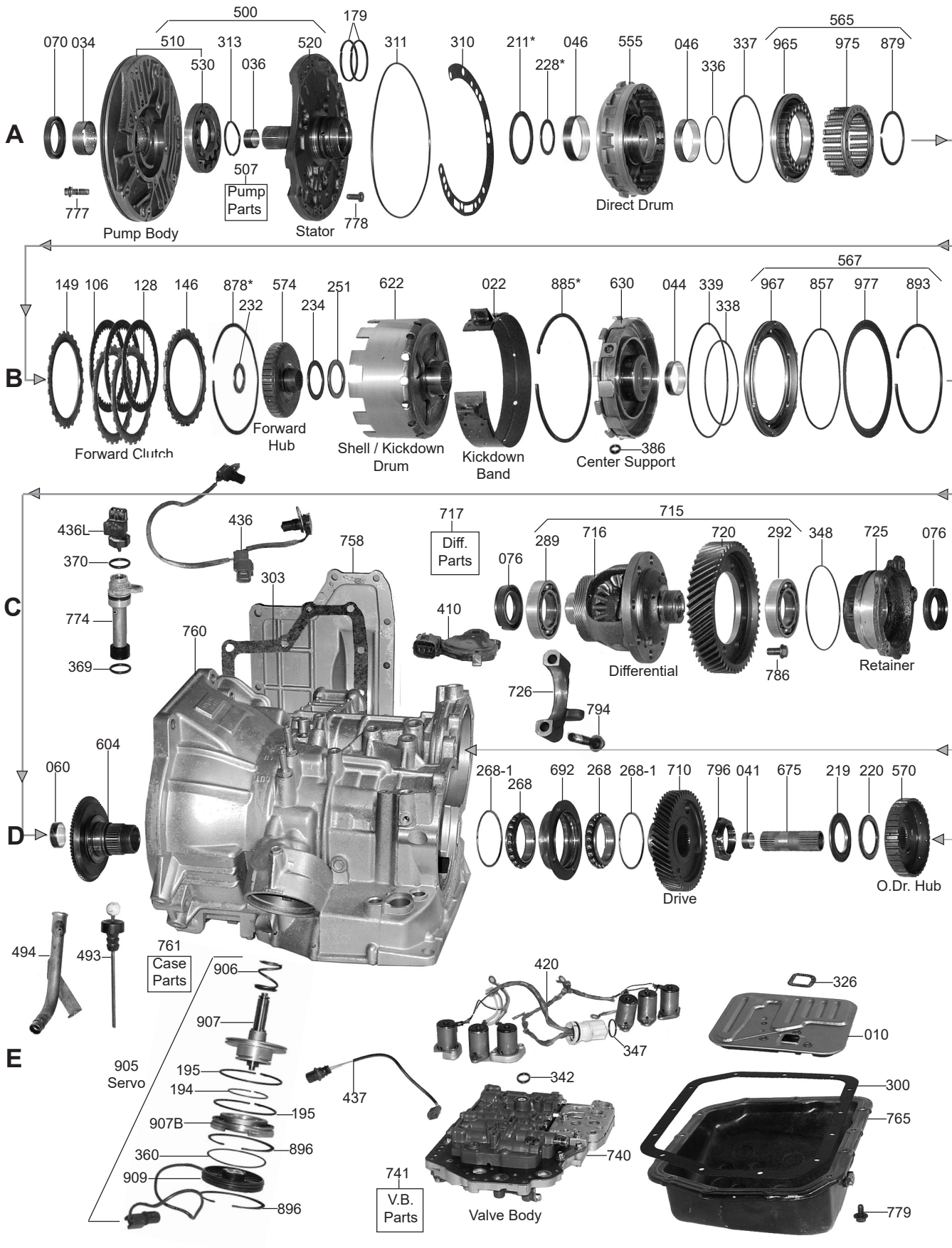

© Whatever It Takes Transmission Parts. Inc.

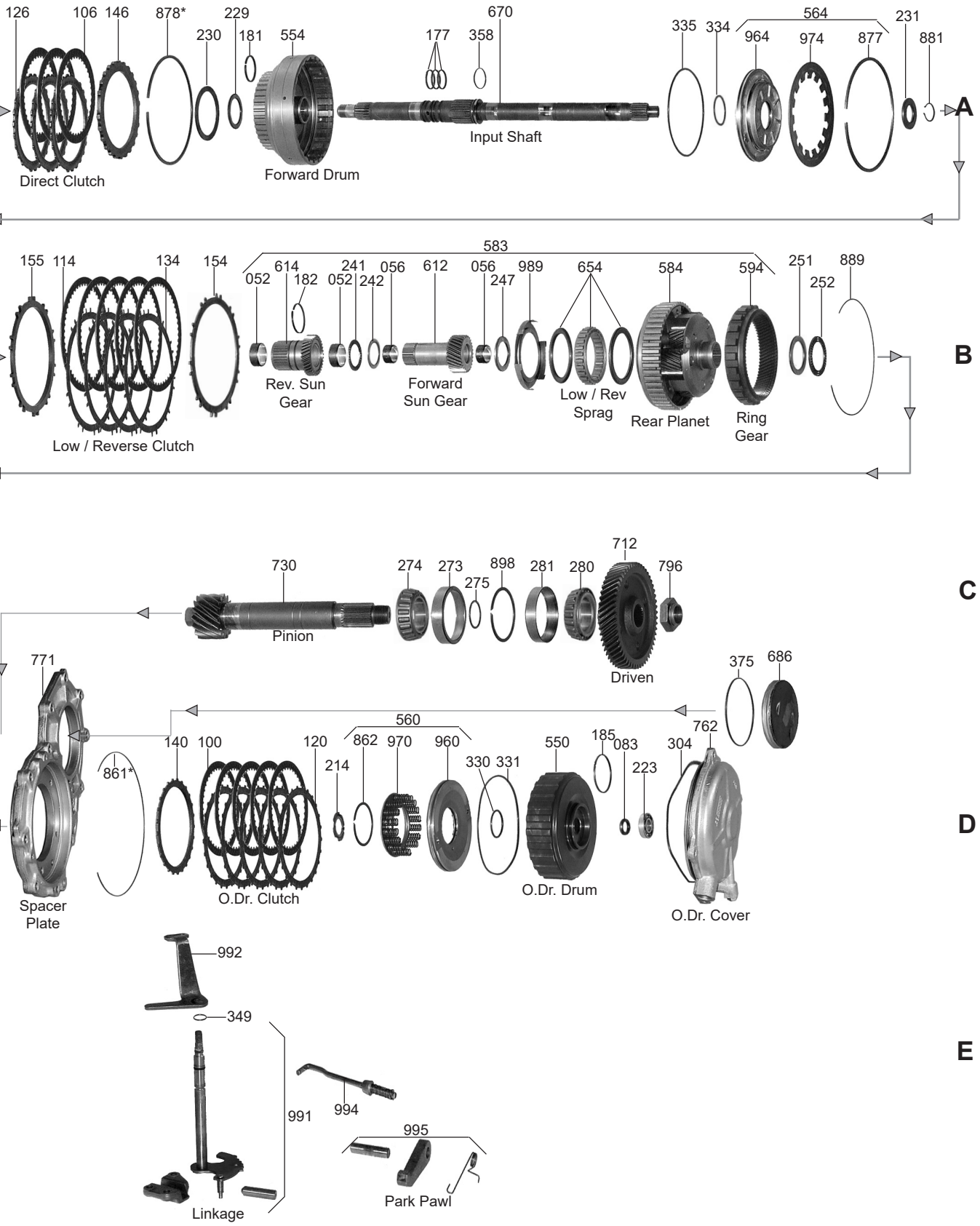

© Whatever It Takes Transmission Parts. Inc.

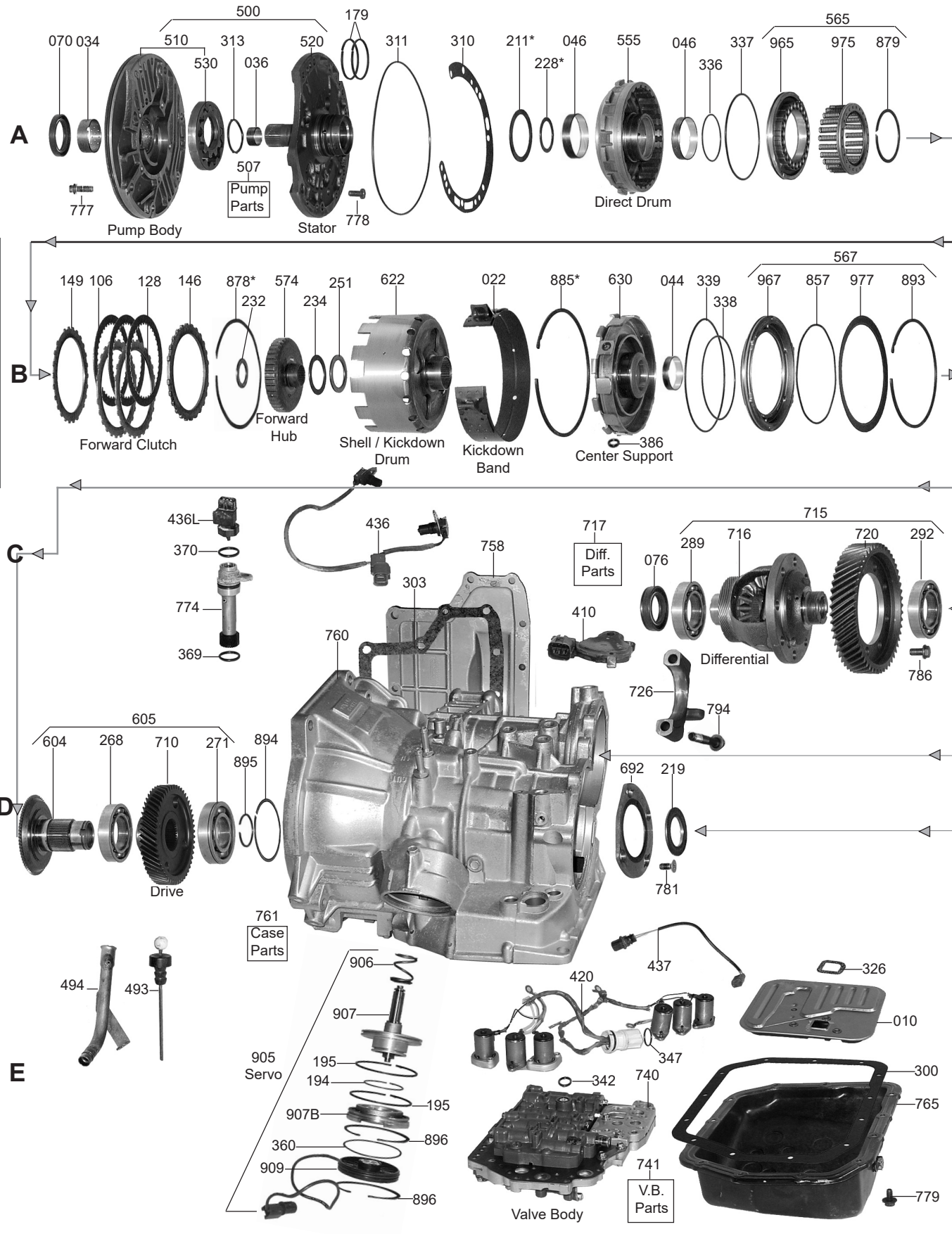
A
070 034
500
510
530
313
036
507
Pump Parts
777
Pump Body
520
Stator
179
778
311
310
211*
228*
046
555
Direct Drum
046
336
337
565
965
975
879
B
149 106
128
146
878*
232
574
234
251
Forward Clutch
Forward Hub
622
Shell / Kickdown Drum
022
Kickdown Band
885*
630
386
Center Support
044
339
338
567
967
857
977
893
C
436L
370
774
369
436
758
303
760
717
Diff. Parts
410
715
289
716
720
292
076
Differential
786
726
794
D
605
604
268
710
271
894
895
Drive
692
219
781
761
Case Parts
E
494
493
906
907
905
Servo
195
194
907B
195
360
896
909
896
437
420
347
326
010
342
740
741
V.B. Parts
Valve Body
300
765
779

00
er &
er Kit

02
aul Kit

04
ter L/
ls Kit

06
er W/
s Kit

11
r Kit

30
ng Kit

9
tion
dule

39
eel
dule

65
Kit

75
g Kit

00
Manual

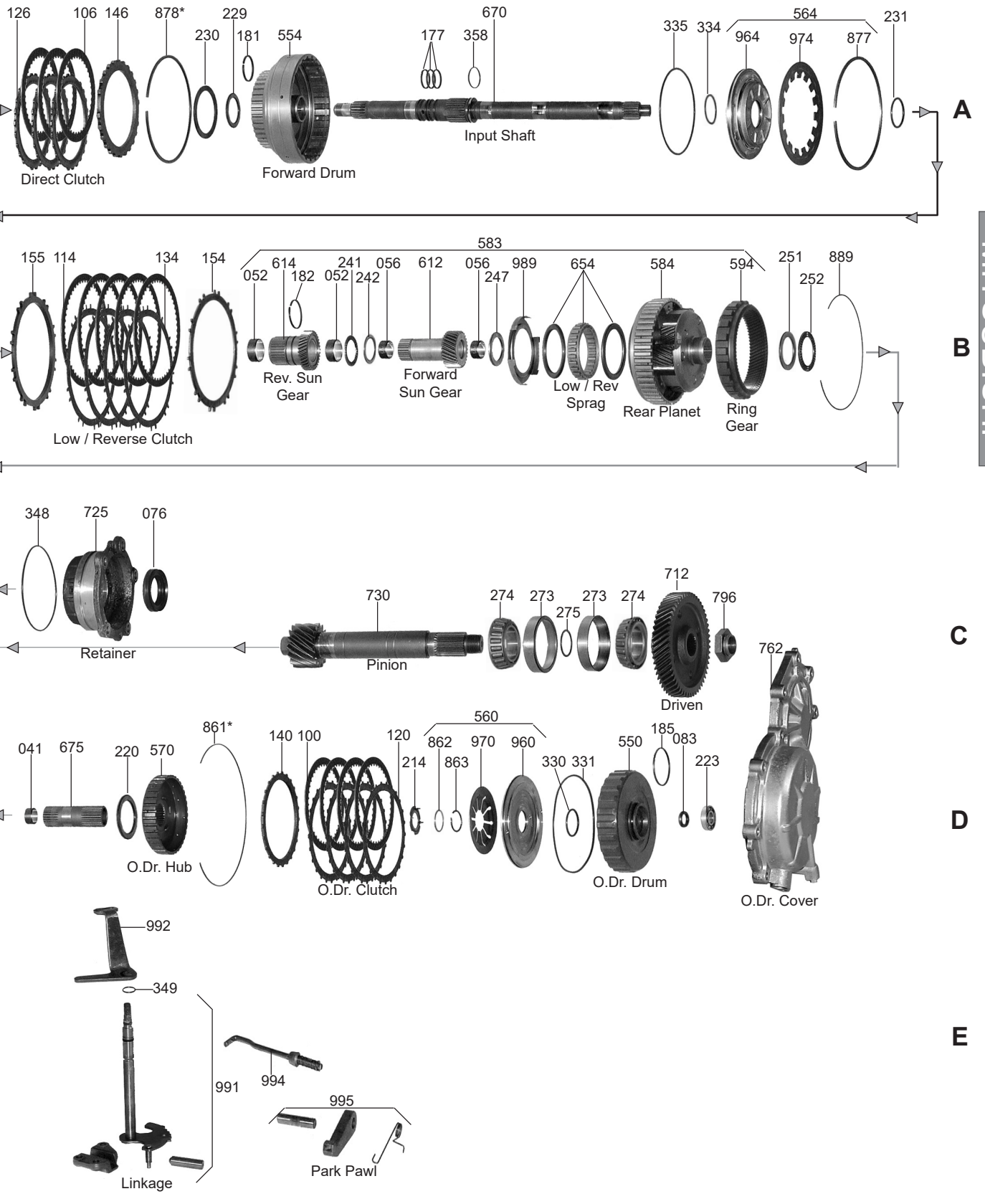

MITSUBISHI

© Whatever It Takes Transmission Parts. Inc.

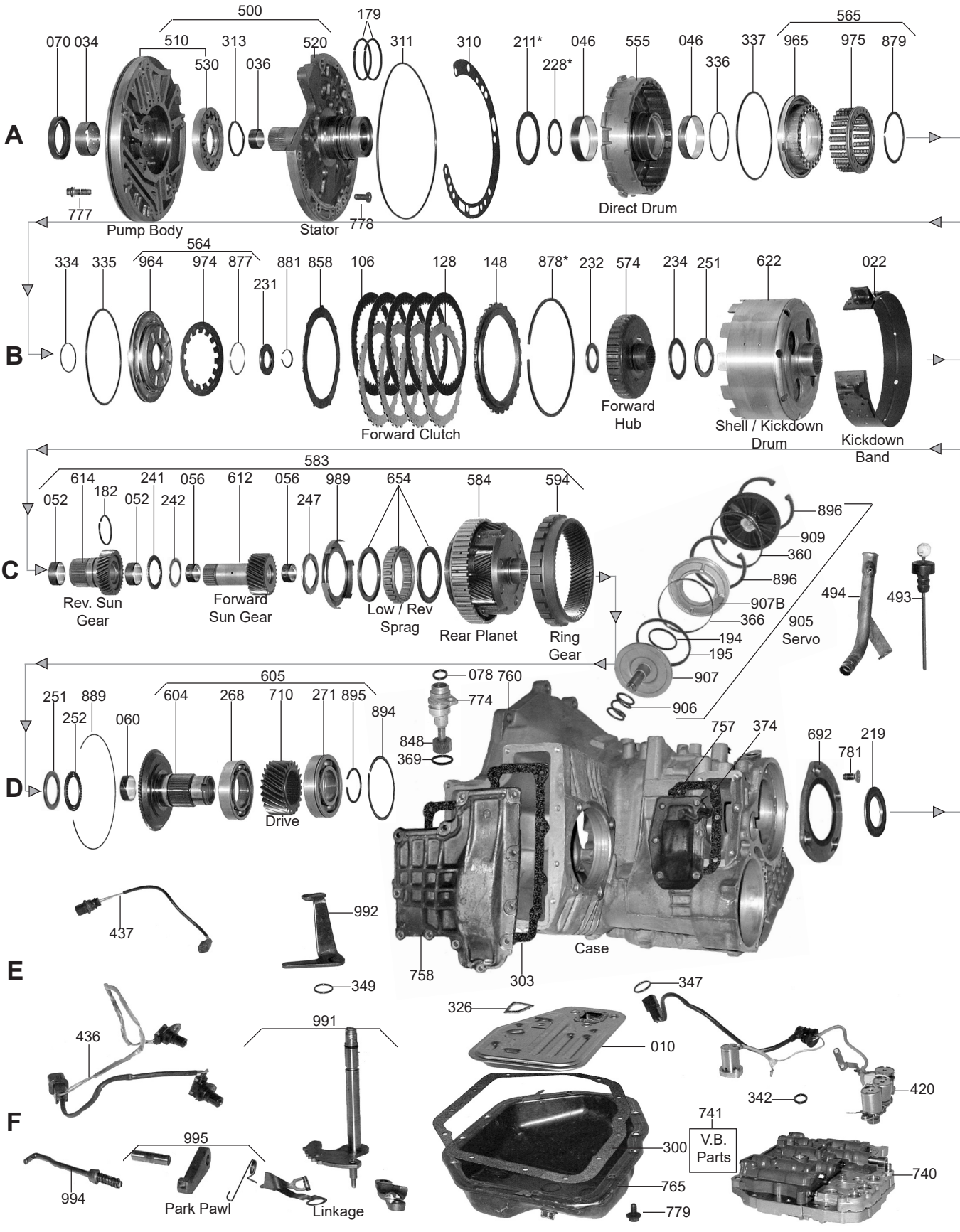
A
070 034
500
510
530
313
036
520
179
311
310
211*
228*
046
555
046
336
337
565
965
975
879
777
Pump Body
Stator
778
Direct Drum
B
334
335
564
964
974
877
231
881
858
106
128
148
878*
232
574
234
251
622
022
Forward Clutch
Forward Hub
Shell / Kickdown Drum
Kickdown Band
C
583
614
052
182
241
052
242
056
612
056
247
989
654
584
594
Rev. Sun Gear
Forward Sun Gear
Low / Rev Sprag
Rear Planet
Ring Gear
896
909
360
896
907B
366
194
195
907
906
905 Servo
494
493
D
605
251
889
252
060
604
268
710
271
895
894
078
760
774
848
369
Drive
757
374
692
781
219
E
437
992
349
758
303
Case
347
326
010
991
436
342
420
F
741
V.B. Parts
300
765
779
740
995
994
Park Pawl
Linkage

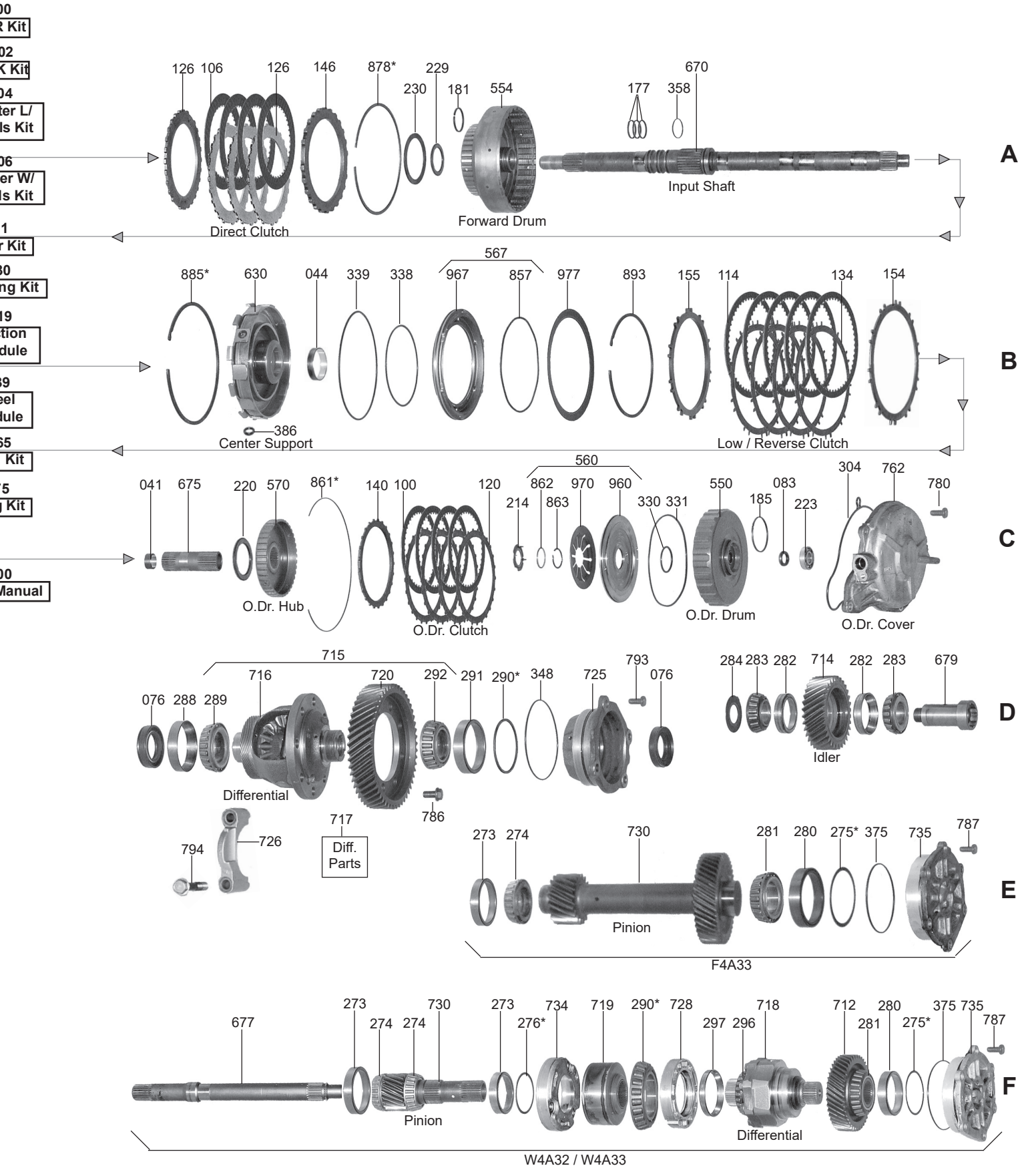

© Whatever It Takes Transmission Parts. Inc.

PART #	PAPER & RUBBER KIT	QTY.	REFERENCE #
42000A	Paper & Rubber Kit, KM170/KM17/KM172 1979-88	1	
42000C	Paper & Rubber Kit, KM175/KM177 1985-88	1	
42000E	Paper & Rubber Kit, KM175-5/KM176-5/KM177-8 1988-Up	1	
42000H	Paper & Rubber Kit, KM171-5/KM172-5 1989-Up	1	
42000L	Paper & Rubber Kit, A4AF1 1991-Up	1	
42000LB	Paper & Rubber Kit, A4AF2 / A4BF1 (Elantra 1996-99) (Tiburon 1997-99)	1	
42000LC	Paper & Rubber Kit, A4AF3/A4BF2/A4BF3 (Elantra 2000)(Tiburon 2000-01)(Accent 2000-03)	1	
42000M	Paper & Rubber Kit, F4A33-1 1990-Up / W4A32/W4A33 (Without Transfer Case Parts) 1990-Up	1	
42000MA	Paper & Rubber Kit, W4A32/W4A33 (With Transfer Case Parts) 1990-Up	1	

PART #	OVERHAUL KITS	QTY.	REFERENCE #
42002A	Overhaul Kit, KM170/KM171/KM172 1979-88	1	
42002C	Overhaul Kit, KM175/KM177 1985-88	1	
42002E	Overhaul Kit, KM175-5/KM176-5/KM177-8 1988-Up	1	
42002H	Overhaul Kit, KM171-5/KM172-5 1989-Up	1	
42002L	Overhaul Kit, A4AF1/A4AF2 1991-Up (A4AF2 Accent 1995-9/99)	1	
42002LB	Overhaul Kit, A4AF2 / A4BF1 (Elantra 1996-99) (Tiburon 1997-99)	1	
42002LC	Overhaul Kit, A4AF3/A4BF2/A4BF3 (Elantra 2000) (Accent 2000-03) (Tuburon 2000-01)	1	
42002M	Overhaul Kit, F4A33-1 1990-Up / W4A32/W4A33 (Without Transfer Case Parts) 1990-Up	1	
42002MA	Overhaul Kit, W4A32/W4A33 (With Transfer Case Parts) 1990-Up	1	

PART #	MASTER L/STEEL KIT	QTY.	REFERENCE #
42004A	Master L/Steels Kit, KM170/KM171/KM172 1979-88	1	
42004C	Master L/Steels Kit, KM175/KM177 1985-88	1	
42004E	Master L/Steels Kit, KM175-5/KM176-5/KM177-8 1988-Up	1	
42004H	Master L/Steels Kit, KM171-5/KM172-5 1989-Up	1	
42004L	Master L/Steels Kit, A4AF1 1991-Up (Also A4AF2 Accent 1995-9/1999)	1	
42004LB	Master L/Steels Kit, A4AF2 / A4BF1 (Elantra 1996-99) (Tiburon 1997-99)	1	
42004LD	Master L/Steels Kit, A4AF3/A4BF2/A4BF3 2000-Up	1	
42004LC	Master L/Steels Kit, A4AF3/A4BF2/A4BF3 (Elantra 2000)(Tiburon 2000-01)	1	
42004LD	Master L/Steels Kit, A4AF3 (Accent) 2000-Up	1	
42004M	Master L/Steels Kit, F4A33-1/W4A33 (Without Transfer Case Parts) 1990-Up	1	
42004MA	Master L/Steels Kit, W4A33 (With Transfer Case Parts) 1990-Up	1	
42004NA	Master L/Steels Kit, W4A32 (With Transfer Case Parts) 1990-Up	1	

PART #	MASTER W/STEEL KIT	QTY.	REFERENCE #
42006A	Master W/Steels Kit, KM170/KM171/KM172 1979-88	1	
42006C	Master W/Steels Kit, KM175 1985-88	1	
42006E	Master W/Steels Kit, KM175-5/KM177-8 1988-Up	1	
42006H	Master W/Steels Kit, KM171-5/KM172-5 1989-Up	1	
42006J	Master W/Steels Kit, KM176-5 1989-Up	1	
42006L	Master W/Steels Kit, A4AF1 1991-Up (Also A4AF2 Accent 1995-9/1999)	1	
42006LB	Master W/Steels Kit, A4AF2/A4BF1 (Elantra 1996-99) (Tiburon 1997-99)	1	
42006LC	Master W/Steels Kit, A4AF3/A4BF2/A4BF3 (Elantra 6/1999-6/2000) (Accent 9/1999-2003) (Tiburon 6/1999-9/2001)	1	
42006LD	Master W/Steels Kit, A4AF3 (Accent) 2000-Up	1	
42006M	Master W/Steels Kit, F4A33-1/ W4A33 (Without Transfer Case Parts) 1990-Up	1	
42006MA	Master W/Steels Kit, W4A33 (With Transfer Case Parts) 1990-Up	1	
42006NA	Master W/Steels Kit, W4A32 (With Transfer Case Parts) 1990-Up	1	
42006P	Master W/Steels Kit, KM177 1985-88	1	

© Whatever It Takes Transmission Parts. Inc.

PART #	FILTER	QTY.	REFERENCE #
42010A	Filter, KM170 (Felt) 1979-81	1	MD707786
42010AA	Filter, KM170/KM171/KM172/KM175 (Felt) 1982-87	1	MD710056
42010E	Filter, KM171-5/KM172-5/KM175-5/KM176-5/KM177-8 (.700") 1987-Up (Half Plastic)	1	MD73-7840
42010EA	Filter, KM171-5/KM172-5/KM175-5/KM177-8 (Felt) 1987-Up	1	MD72-9955
42010L	Filter, A4AF1/ A4BF1 / A4BF2 (Half Plastic) 1991-Up	1	
42010LA	Filter, A4AF3/A4BF3 (Hyundai) (Half Plastic) 2000-Up	1	
4210M	Filter, F4A3/W4A32/W4A33 (ero Leak) (HalfPlastic) 1990-Up	1	M73-5572
42010P	Filter, KM175-5KM177-8 (Felt) (loks Like A Boot) 1987-Up	1	
42015A	Filter, A4AF1/A4AF2/A4AF3/A4BF1/A4BF2/A4BF3 In Valve Body (Flat Plastic)(L Shaped)	1	

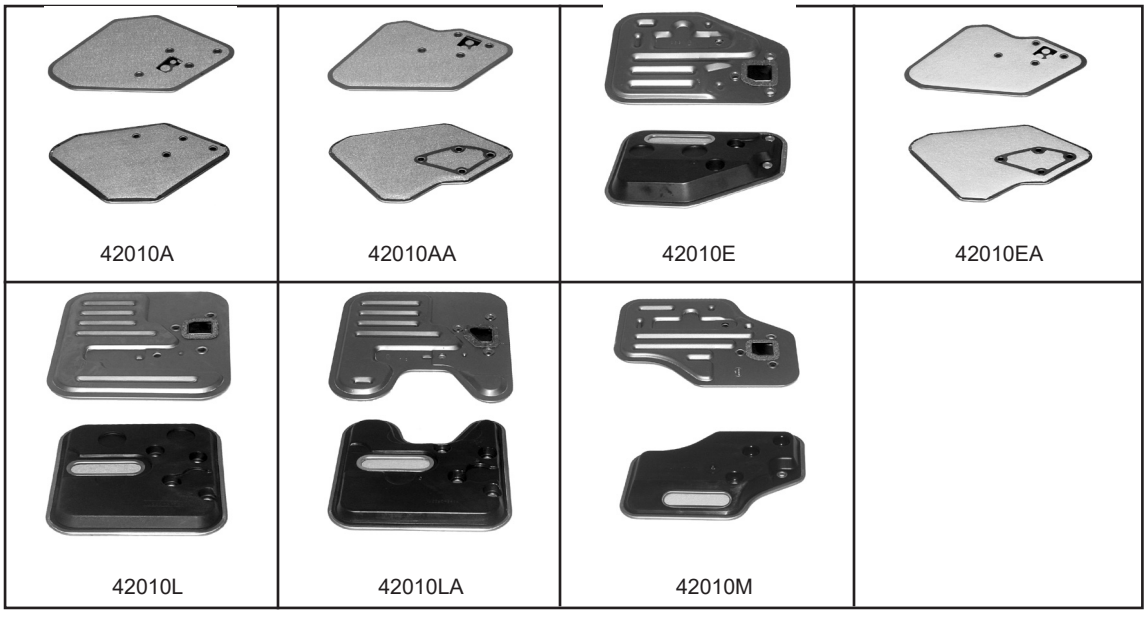

42010A | 42010AA | 42010E | 42010EA

42010L | 42010LA | 42010M

PART #	FILTER KIT	QTY.	REFERENCE #
42011A	Filter Kit, KM170 (Felt) 1979-81	1	
42011AA	Filter Kit, KM170/KM171/KM172/KM175 (Felt) 1982-87	1	
42011E	Filter Kit, KM171-5/KM172-5/KM175-5/KM176-5 (Zero Leak) (.700") 1987-Up	1	
42011EA	Filter Kit, KM171-5/KM172-5/KM175-5/KM176-5 (Felt) 1987-Up	1	
42011L	Filter Kit, A4AF1/A4BF1/A4BF2 1991-Up (Half Plastic)	1	
42011LA	Filter Kit, A4BF-3 (Hyundai) 2000-Up	1	
42011M	Filter Kit, F4A33-1/W4A32-1/W4A33-1 (Zero Leak) 1990-Up	1	
42011P	Filter Kit, KM177 1987-Up	1	

PART #	BANDS	QTY.	REFERENCE #
42022A	Band, KM170/KM171/KM172/KM175/KM171-5/KM172-5/KM175-5/KM176-5/A4AF1/A4AF3 (1 9/16" Wide)	1	MD725287
42022G	Band, KM177/KM177-8/A4BF1/A4BF2/W4A32 (1 3/4" Wide) 1987-Up	1	MD721408
42022M	Band, F4A33/W4A33 Kickdown (2 3/8" Wide) 1990-Up	1	MD736920

PART #	BUSHINGS	QTY.	REFERENCE #
42030AC	Bushing Kit, KM170/KM171/KM172/KM171-5/KM172-5 1979-Up	1	
42030DC	Bushing Kit, KM172/KM175 1983-88	1	
42030E	Bushing Kit, KM171-5/KM175-5/KM176-5/KM177-8/A4AF/A4BF 1989-Up	1	
42030M	Bushing Kit, F4A33	1	
42034A	Bushing, All KM Pump Body 1979-Up	1	
42036A	Bushing, All KM Stator Support (Front)(.945"OD) 1979-88	1	
42036E	Bushing, All KM Stator Support (Front)(.988"OD) 1989-Up	1	
42041C	Bushing, KM175/KM177 Overdrive Shaft (.732"ID) 1985-88 (Use 42056C)	1	
42041E	Bushing, KM175-5/KM176-5/KM177-8/A4AF-1/W4A32/W4A33 Overdrive Shaft (.808"ID) (Use 42056E)	1	
42044A	Bushing, KM170/KM171 Center Support (Wide) (1.537"ID) 1979-88	1	010-323-115
42044C	Bushing, KM172/KM175/KM177 Center Support (Front) (Narrow) (1.653"ID) 1983-88	1	

© Whatever It Takes Transmission Parts. Inc.

PART #	BUSHINGS (Continued)	QTY.	REFERENCE #
42044CR	Bushing, KM172/KM175/KM177 Center Support (Rear) (Narrow) (1.576"ID) 1983-88	1	
42044E	Bushing, All KM With Steel Center Support (Narrow) 1.690"ID 1988-Up	1	
42046A	Bushing, KM170/KM171/KM172/KM175/KM171-5/KM176-5/A4AF1/A4BF2 Direct Drum (Wide) (2.047"ID) 1979-Up	1	MD707283
42046E	Bushing, KM172-5/KM175-5/KM177-8/A4BF1/F4A33/W4A32/W4A33 Direct Drum (Front) Narrow (2.157"ID) 1989-Up	1	
42046ER	Bushing, KM172-5/KM175-5/KM177-8/A4BF1/F4A33/W4A32/W4A33 Direct Drum (Rear) Narrow (2.047"ID) 1989-Up	1	
42046L	Bushing, A4AF3 Direct Drum (Front) (2.054"ID) Fits The 42555L Drum (These Are Special Made For Us)	1	
42052A	Bushing, KM170/KM171 Reverse Sun Gear (.823"ID) 1979-88	2	MD707463
42052C	Bushing, KM175/KM177 Reverse Sun Gear (1.023"ID) 1985-88	2	
42052D	Bushing, KM172/KM171-5/KM172-5/KM175-5/KM176-5/KM177-8/A4AF1/A4AF3/A4BF1/A4BF2/ F4A33/W4A32/W4A33 Reverse Sun Gear (1.102")	2	MD720760
42056C	Bushing, KM175/KM177 Forward Sun Gear (.732"ID) 1985-88 (Also Fits KM175/KM177 Overdrive Shaft #041)	2-3	MD712766
42056E	Bushing, KM175-5/KM176-5/KM177-8/A4AF/A4BF/F4A33/W4A32/W4A33 Forward Sun Gear (.808"ID) 1988-Up (Also Fits KM175-5/KM176-5/KM177-8/A4AF1/A4AF3/A4BF1/A4BF2/ W4A32/W4A33 Overdrive Shaft #041)	2-3	MD720769
42058A	Bushing, KM170/KM171/KM172/KM171-5/KM172-5 Planet (.469"ID) 1979-Up	1	MD715286
42060A	Bushing, KM170/KM171 Output Shaft (.904"ID) 1979-88	1	MD707454B
42060C	Bushing, KM172/KM175/KM177 Output Shaft (Front) (1.178"ID) 1983-88	1	MD733486
42060CR	Bushing, KM172/KM175/KM177 Output Shaft (Rear) (1.018"ID) 1985-88	1	
42060E	Bushing, KM175-5/KM176-5/KM177-8/A4AF1/A4AF3/A4BF1/A4BF2/F4A33/W4A32/W4A33 Output Shaft (Front) (1.300"ID) 1988-Up	1	
42060H	Bushing, KM171-5 Output Shaft (.924"ID) 1989-Up	1	

PART #	METAL CLAD SEALS	QTY.	REFERENCE #
42070A	Seal, All KM Series (Front) 1979-Up (Also A4AF1/A4AF2/A4AF3/A4BF1/A4BF2/A4BF3)	1	MD955601
42076A	Seal, All KM (Both Sides) 1979-Up (Except F4A33 6/1992-Up) (.395" Thick)	2	MD707184
42076L	Seal, A4AF1/A4SF2/A4AF3/A4BF1/A4BF2/A4BF3 Axle (Both Axles) 1993-Up	2	
42076M	Seal, F4A33 (Both Axles) 6/1992-Up	1	
42083E	Seal, KM175-5/KM176-5/KM177-8/A4AF3/A4BF1/A4BF2/F4A33/W4A32/W4A33 Overdrive Drum 1988-Up (11/16"ID) 1988-Up	1	MD722531
42083EA	Seal, KM175-5/KM176-5/KM177-8/A4AF1/W4A32 Overdrive Drum (1/2"ID) 1992-Up	1	MD736847

PART #	FRICTION CLUTCH	QTY.	REFERENCE #
42100C	Friction, KM175/KM175-5/KM176-5/KM177-8/A4AF1/A4BF1/A4BF2/F4A33/W4A32/W4A33 Overdrive Clutch (.074") (40 Teeth) 1985-Up	3-4	MD739092
A42100CAPPK	Friction & Steel Kit, All KM Series Overdrive Clutch (Contains; 4 Red .059" Frictions, & 4 Kolene .047" Steels) (Alto)	1	59757
42100L	Friction, A4AF3 Overdrive Clutch (.065") (36 Teeth) 2000-Up	3-4	
42106A	Friction, KM171/KM172 Forward Clutch (.075") (10 Teeth) 1982-88	2-3	MD714345
42106B	Friction, KM170/KM171/KM172/KM175/KM177 Forward & Direct Clutch (.075") (38 Teeth) (5.000"OD) 1979-88	4-6	MD713655
42106E	Friction, KM171-5/KM172-5/KM175-5/KM176-5/KM177-8/A4AF1/A4AF3/A4BF1/A4BF2/W4A32 Forward & Direct Clutch (.075") (38 Teeth) (4.996"OD) 1989-Up	4-6	MD722555
42106L	Friction, A4AF3/A4BF2/A4BF3 Forward Clutch (.066") 38 Teeth (Eclipse) 2000-Up	4-6	
42106M	Friction, F4A33/W4A33 Direct Clutch (.067") (38 Teeth) (5 7/16"OD) 1990-Up	4	MD735828
42106MC	Friction, F4A33/W4A33 Forward Clutch (.067") (42 Teeth) (5 7/16"OD) 1990-Up	5	MD731582
42114B	Friction, KM170/KM171/KM172/KM175 Low/Reverse Clutch (.072") (48 Teeth) 1979-88	4-6	MD728108
42114E	Friction, KM171-5/KM172-5/KM175-5/KM176-5/KM177-8/A4AF1/A4AF3/A4BF1/A4BF2/W4A32 Low/Reverse Clutch (.071") (51 Teeth) 1987-Up	6	MD719833
42114L	Friction, A4AF1/A4BF2/A4BF3 Low/Reverse Clutch (.071") 51 Teeth (Eclipse) 2000-Up	5-6	
42114M	Friction, F4A33/W4A33 Low/Reverse Clutch (.067") (54 Teeth) (6 1/4"OD) 1990-Up	5-6	MD731586
42119E	Friction Module, KM175-5/KM176-5/KM177-8/A4AF1/A4AF2/A4BF1/W4A32 1988-Up	1	
42119H	Friction Module, KM171-5/KM172-5 1988-Up	1	
42119LD	Friction Module, A4AF3/A4BF2/A4BF3 2000-Up	1	
42119M	Friction Module, F4A33/W4A33 1990-Up	1	

PART #	STEEL CLUTCH	QTY.	REFERENCE #
42120C	Steel, KM175/KM175-5/KM176-5/KM177-8/A4AF1/A4BF1/A4BF2/F4A33/W4A32/W4A33 Overdrive Clutch (.032") (25 Teeth) 1985-Up	3-4	MD712528
42120L	Steel, A4AF3 Overdrive Clutch (.097") 25 Teeth (3.770"ID) 1993-Up	3-4	
42120LD	Steel, A4BF Overdrive Clutch (.160") 25 Teeth (3.770"ID) 2000-Up	3-4	

© Whatever It Takes Transmission Parts. Inc.

42126B ..... Steel, KM170/KM171/KM172/KM175/KM177 Direct Clutch (.150") (24 Teeth) (3.970"ID) ..... 1979-88 (This Is Also The Pressure Plate 42146B) ..... 3-4 ..... MD707256
42126E ..... Steel, KM171-5/KM172-5/KM175-5/KM176-5/KM177-8/A4AF1/A4AF3/A4BF1/A4BF2/W4A32 ..... Direct Clutch (.146") (24 Teeth) (4.117"ID) 1989-Up (This Is Also The Pressure Plate 42146E) .. 2-3 ..... MD722559
42126G ..... Steel, F4A33 Direct Clutch (.120") (24 Teeth) (4.117"ID) 1992-Up) ..... 2-3 ..... MD739509
42126M ..... Steel, F4A33/W4A33 Direct Clutch (.088") (26 Teeth) (4.115"ID) 1990-Up ..... 3 ..... MD739384
42126MB ..... Steel, F4A33/W4A33 Direct Clutch (.150") (26 Teeth) (4.115"ID) 1990-Up ..... 1 .....
42128A ..... Steel, KM170/KM171/KM172/KM175/KM177 Forward Clutch (.071") (24 Teeth) ..... (3.970"ID) 1979-88 ..... 2 ..... MD707255
42128E ..... Steel, KM171-5/KM172-5/KM175-5/KM176-5/KM177-8/A4AF1/A4BF1/A4BF2/W4A32 Forward ..... Clutch (.071") (24 Teeth) (4.100"ID) 1989-Up ..... 2-3 ..... MD722556
42128L ..... Steel, A4AF3 Forward Clutch (.077") 24 Teeth (4.100"ID) 1993-Up .....
42128LA ..... Steel, A4AF1/A4AF2/A4BF1 Forward Clutch (.087")(24 Teeth)(4.100"ID) 1999-Up ..... 1 .....
42128M ..... Steel, F4A33/W4A33 Forward Clutch (.071") (26 Teeth) (4.360"ID) 1990-Up ..... 5 ..... MD731604
42134A ..... Steel, KM170 Low/Reverse Clutch (.071") (6 Teeth) (5.00"ID) 1979-81 ..... 3 ..... MD707401
42134B ..... Steel, KM171 Low/Reverse Clutch (.071") (12 Teeth) (5.00"ID) 1982-84 ..... 3 ..... MD707425
42134BB ..... Steel, KM172/KM175/KM177 Low/Reverse Clutch (.039") (24 Teeth) (5.00"ID) 1984-88 ..... 5 ..... MD704948
42134BC ..... Steel, KM171/KM172/KM175 Low/Reverse Clutch (.071") (24 Teeth) (5.00"ID) 1985-88 ..... 3 ..... MD715438
42134E ..... Steel, KM172-5/KM175-5/KM176-5/KM177-8/A4AF3 Low/Reverse Clutch (.039") ..... (20 Teeth) (5.300"ID) 1987-Up ..... 5 ..... MD727798
42134H ..... Steel, KM171-5/KM176-5/A4AF1/A4BF1/A4BF2/W4A32 Low/Reverse Clutch (.071") ..... (20 Teeth)(5.300"ID) 1989-Up ..... 3 ..... MD727799
42134M ..... Steel, F4A33/W4A33 Low/Reverse Clutch (.039") (20 Teeth) (5.540"ID) 1990-Up ..... 4-5 ..... MD731587
42134P ..... Steel, KM177 Low/Reverse Clutch (.039") (24 Teeth) (5.300"ID) 1987-88 ..... 5 ..... MD719834
42139E ..... Steel Module, KM175-5/177-8 1988-Up ..... 1 .....
42139H ..... Steel Module, KM171-5/172-5 1988-Up ..... 1 .....
42139M ..... Steel Module, F4A33/W4A33 1990-Up ..... 1 .....

PART #	CLUTCH PRESSURE PLATES	QTY.	REFERENCE #

42140C ..... Pressure Plate, P.Plate, KM175/KM175-5/KM176-5/KM177-8/A4AF1/A4BF1/A4BF2/F4A33/ ..... W4A32/W4A33 Overdrive Clutch (25 Teeth) .177" (4.170"ID) 1985-Up ..... 1 .....
42140L ..... Pressure Plate, A4AF3 Overdrive Clutch (25 Teeth) .177" (3.770"ID) 1993-Up ..... 1 .....
42146B ..... Steel, Km170/KM171/KM172/KM175/KM177 Direct Clutch (.150") (24 Teeth) (3.970"ID) 1979-88 ..... (Use 42126B) ..... 1 ..... MD727157
42146E ..... Pressure Plate, KM171-5/KM172-5/KM175-5/KM176-5/KM177-8/A4AF/W4A32 Forward ..... & Direct Clutch (.146") (24 Teeth) (4.117"ID) 1989-Up (Use 42126E) ..... 1 .....
42146EA ..... Pressure Plate, KM171-5/KM172-5/KM175-5/KM176-5/KM177-8/A4AF1/A4BF1/W4A32 ..... Forward & Direct Clutch (.192") (24 Teeth) (4.100"ID) 1989-Up ..... 1 .....
42146L ..... Pressure Plate, A4AF3 Forward Clutch (.246")(24 Teeth)(4.215"ID) ..... 1 .....
42146M ..... Pressure Plate, F4A33/W4A33 Direct Clutch (.195") (26 Teeth) (4.120"ID) 1990-Up ..... 1 .....
42148M ..... Pressure Plate, F4A33/W4A33 Forward Clutch (.240") (26 Teeth) (Stepped) 1990-Up ..... 1 .....
42149B ..... Apply Plate, KM170/KM171/KM172/KM175/KM177 Forward Clutch (Bottom) (.195") ..... (24 Teeth) (4.00"ID) (Beveled) 1979-88 ..... 1 ..... MD707251
42149E ..... Pressure Plate, KM171-5/KM172-5/KM175-5/KM176-5/KM177-8/A4AF1/A4BF1/A4BF2/W4A32 ..... Forward Beveled (24 Teeth) .195" (4.100"ID) Bottom 1989-Up ..... 1 ..... MD732408
42149M ..... Pressure Plate, F4A33/W4A33 Forward Clutch (26 Teeth) .160" (Stepped) Bottom 1990-Up ..... 1 .....
42154A ..... Pressure Plate, KM170 Low/Reverse Clutch (.150") (6 Teeth) (5.00"ID) 1979-81 ..... 1 .....
42154B ..... Pressure Plate, KM171/KM172/KM175 Low/Reverse Clutch (.145") (12 Teeth) ..... (5.00"ID) 1982-88 ..... 1 .....
42154E ..... Pressure Plate, KM171-5/KM172-5/KM175-5/KM176-5/KM177-8/A4AF1/A4AF3/A4BF1/A4BF2/ ..... W4A32 Low/Reverse Clutch (.145") (20 Teeth) (5.300"ID) 1989-Up ..... 1 .....
42154G ..... Pressure Plate, KM177-8 Low/REverse Clutch (20 Teeth) .100" Thick (5.300"ID) 1989-Up ..... 1 .....
42154M ..... Pressure Plate, F4A33/W4A33 Low/Reverse Clutch (.160") (20 Teeth) (5.540"ID) 1990-Up ..... 1 .....
42154P ..... Pressure Plate, KM177 Low/Reverse Clutch (.166") (20 Teeth) (5.540"ID) 1988 ..... 1 .....
42155A ..... Apply Plate, KM170 Low/Reverse Clutch (.150") (6 Teeth) (5.00"ID) 1979-83 ..... 1 .....
42155B ..... Apply Plate, KM171/KM172/KM175 Low/Reverse Clutch (.220") (12 Teeth) (5.00"ID) ..... (Beveled) 1982-88 ..... 1 ..... MD707402
42155E ..... Apply Plate, KM171-5/KM172-5/KM175-5/KM176-5/A4AF1/A4AF3/A4BF1/A4BF2/W4A32 ..... Low/Reverse Clutch (.245") (20 Teeth) (5.300"ID) (Beveled) 1989-Up ..... 1 .....
42155EA ..... Apply Plate, KM171-5/KM172-5/KM175-5/KM176-5/A4AF1/A4AF3/A4BF1/A4BF2/W4A32 ..... Low/Reverse Clutch (.155") (20 Teeth) (5.300"ID) (Beveled) 1989-Up ..... 1 .....
42155M ..... Apply Plate, F4A33/W4A33 Low/Reverse Clutch (.255") (20 Teeth) (5.540"ID) (Beveled) ..... 1990-Up ..... 1 .....

© Whatever It Takes Transmission Parts. Inc.

PART #	VALVE BODY KITS	QTY.	REFERENCE #
T42165C	Shift Kit, KM175/KM177/KM175-5/KM176-5/KM177-5 (4 Speed) 1988-Up (Mitsubishi, Hyundai, Dodge) Prevents/Reduces 2-3 Cutloose, Long/Soft 3rd, 3-4 Nuetral, 4-2 Kickdown Runaway	1	SK® KM-175/77
42165CA	Valve Body Kit, KM With 4 Solenoids 1988-Up (Translab)(Hits Reverse Limiter At Full Throttle, Driver Must Lift Foot To Get 2-3 Shift)	1	
A42165L	Valve Body Kit, A4AF/A4BF With 6 Solenoids (Translab)	1	

PART #	OIL SEALING RINGS	QTY.	REFERENCE #
42175A	Ring Kit, KM170/KM171/KM172 1979-88	1	
42175C	Ring Kit, KM175/KM177 1985-88	1	
42175CC	Ring Kit, All KM Series 4 Speed (Except F4A33/W4A33) Combo 1985-Up	1	
42175E	Ring Kit, KM175-5/KM176-5/KM177-8/A4AF/W4A32 1989-Up	1	
42175H	Ring Kit, KM171-5/KM172-5 1989-Up	1	
42175M	Ring Kit, F4A33/W4A33 1990-Up	1	
42177A	Ring, KM170/KM171/KM172/KM175 Input Shaft (Front) Small .944”OD (Metal) 1979-88	1-3	MD707236
42177ET	Ring, KM171-5/KM172-5/KM176-5/KM177/KM177-8/A4AF/F4A32/W4A32/W4A33 Input Shaft (Front) Small 1.023”OD (Teflon) 1983-Up	3	MD722551
42179A	Ring, All KM Series Pump Stator 2.165”OD (Metal) 1979-Up	2	MD707646
42179ET	Ring, All KM Series Pump Stator 2.165”OD (Teflon) 1988-Up	2	MD713991
42181A	Ring, KM170/KM171/KM172/KM175 Forward Drum (Front) 1.259”OD (Metal) 1979-88	1	MD707235
42181AT	Ring, KM170/KM171/KM172/KM175 Forward Drum (Front) 1.259”OD (Teflon) 1979-88	1	
42181E	Ring, KM171-5/KM172-5/KM175-5/KM176-5/KM177/KM177-8/A4AF/F4A33/W4A32/W4A33 Forward Drum (Front) 1.370”OD (Metal) 1988-Up	1	MD722639
42182ET	Ring, KM175-5/KM172-5/KM175-5/KM176-5/KM177-5/F4A32/F4A33/W4A32/W4A33 Reverse Sun Gear 1.574”OD (Teflon) 1989-Up	1	MD722278
42185AT	Ring, All KM 3 Speed Series Input Shaft (Rear) .513”OD (Teflon) 1979-Up	1	MD707237
42185C	Ring, All KM 4 Speed Series Overdrive Drum (Lock Joint) (Metal) 1985-Up	1	
42189A	Ring, KM170/KM171/KM172/KM175/KM171-5/KM172-5 Governor 1.389”OD (Metal) 1979-Up	3	MD715020
42191A	Ring, Accumulator Piston (Inner) .882”OD (Metal)	1	MD707204
42192A	Ring, All KM Series Accumulator Piston (Outer) 1.772”OD (Metal)	1	MD707202
42194BT	Ring, Servo Piston (Small) 1.785”OD (Teflon)	1	MD707369
42194DT	Ring, Servo Piston (Small) 1.947”OD (Teflon)	1	MD715047
42195BT	Ring, Servo Piston (Large) 2.800”OD (Teflon)	1	
42195ET	Ring, Servo Piston (Large) 2.840”OD (Teflon)	1	
42195MT	Ring, Servo Piston (Large) 3.700”OD (Teflon)	1	
42195PT	Ring, Servo Piston (Large) 3.000”OD (Teflon)	1	

PART #	WASHERS & BEARINGS	QTY.	REFERENCE #
42211B	Washer, All KM Series Stator To Direct Drum (.055”) Fiber (Also Fits Forward Drum To Direct Drum)	1-2	
42211BA	Washer, All KM Series Stator To Direct Drum (.070”) Fiber	1	
42211BB	Washer, All KM Series Stator To Direct Drum (.086”) Fiber	1	
42211BC	Washer, All KM Series Stator To Direct Drum (.100”) Fiber	1	
42211BD	Washer, All KM Series Stator To Direct Drum (.118”) Fiber	1	
S42211K	Washer & Shim Kit, All Km Series Stator To Drums (Sonnax)	1	
42214C	Washer, KM175 Hub To Overdrive Drum (4 Tab) (1.415”OD)	1	
42214E	Washer, KM175-5/KM176-5/KM177-8/A4AF1/A4BF1/A4BF2/W4A32 Hub To Overdrive Drum (4 Tab) (1.490”OD)	1	MD-734101
42214L	Washer, A4AF3 Hub To Overdrive Drum (.079” Thick) No Tabs (1.008”ID) (1.415”OD)	1	
42214M	Washer, F4A33/W4A33 Hub To Overdrive Drum (4 Tab) (1.500”OD)	1	
42219L	Cup Race, A4BF1/A4BF2/A4BF3 Overdrive Hub (Front)(.205” Thick)(1.785”OD)(1.182”ID) (Has 6 Outer Tabs)	1	
42219LB	Cup Race, A4AF3/A4BF2 Overdrive Hub (Front)(.080” Thick)(1.758”OD)(1.118”ID)(Has 4 Outer Tabs)	1	
42220C	Washer, KM175 Overdrive Hub Front With (1 Tab) (.072”)	1	MD715877
42220E	Bearing With Race, KM175-5/KM176-5/KM177-8/A4AF1/W4A32/W4A33 (Some A4BF2) Overdrive Hub (Front)(2.275”OD)(1.720”ID)(.200” Thick Enclosed Bearing)	1	
42220L	Bearing W/Race & Cup Race, A4BF1/A4AF2/A4AF3 Overdrive Hub (Front) (Bearing W/Race Is .109” Thick, 1.672”OD, 1.108”ID)(Cup Race Has 6 Outer Tabs)(2 Piece Set)(Use 42220LK Per ATRA)	1	
42220LA	Shim, A4BF1/A4BF2 Overdrive Hub (Front)(.015” Thick)(1.270”ID)(Use With 42220L Bearing To Correct Inplay, Per ATRA)(Sell 42220LK Per Atra)	1	
42220LB	Bearing W/Race & Cup Race, A4AF3/A4BF2 Overdrive Hub (Front)(Bearing W/Race Is .109” Thick, 1.672”OD, 1.132”ID)(Cup Race Has 4 Outer Tabs)(2 Piece Set)	1	
42220LK	Kit, A4BF1/A4BF2 (Some)/A4AF2/A4AF3 Overdrive Hub (Front)(Contains: 42220L, 42220LA & 42056E)	1	

© Whatever It Takes Transmission Parts. Inc.

42220P ..... Bearing W/Race, KM177 Overdrive Hub (Front) 1
42223C ..... Ball Bearing, KM175-KM177 Overdrive Drum To Overdrive Cover (1.118"OD)
..... (11/16"ID) 1985-88 1
42223E ..... Ball Bearing, KM175-8/KM176-5/KM177-8/A4AF1/F4A33/W4A32/W4A33 Overdrive Drum To
..... Overdrive Cover (1.122"OD) (1/2"ID) 1989-95 1
42223L ..... Ball Bearing, A4AF3/A4BF1/A4BF2 Overdrive Drum To Overdrive Cover (1.181"OD) (.671"ID) ... 1
42228B ..... Race, All KM Series Forward Drum To Stator (.030") 1
42228BA ..... Race, All KM Series Forward Drum To Stator (.046") 1
42228BAA ..... Race, All KM Series Forward Drum To Stator (.055") 1
42228BB ..... Race, All KM Series Forward Drum To Stator (.062") 1
42228BBB ..... Race, All KM Series Forward Drum To Stator (.070") 1
42228BC ..... Race, All KM Series Forward Drum To Stator (.078") 1
42229B ..... Bearing With Race, All KM Series Forward Drum To Stator 1
42230B ..... Washer, All KM Series Forward Drum To Direct Drum (2 3/4"OD) (.055") (Use 42211B) 1
42230M ..... Washer, F4A33/W4A33 Forward Drum To Direct Drum (2 9/16"OD) 1
42231B ..... Race, KM170/KM171 Forward Drum To Hub (1 3/8"OD) 1
42231C ..... Race, KM172/KM175 Forward Drum To Hub (1 9/16"OD) (3/4"ID) 1
42231E ..... Race, KM171-5/KM172-5/KM176-5/A4AF1/A4AF3/A4BF1/A4BF2/F4A33/W4A32/W4A33
..... Forward Drum To Hub (1 9/16"OD) (13/16"ID) 1
42232B ..... Bearing W/Race, KM170/KM171 Forward Drum To Hub 1
42232C ..... Bearing W/Race, KM172/KM175 Forward Drum To Hub 1
42232E ..... Bearing W/Race, KM171-5/KM172-5/KM176-5/KM177-8/A4AF1/A4AF3/A4BF1/A4BF2/F4A33/
..... W4A32/W4A33 Forward Drum To Hub 1
42234B ..... Race, All KM Series Forward Hub To Kickdown Drum (.060") 1
42234C ..... Race, All KM Series Forward Hub To Kickdown Drum (.030") 1
42234M ..... Race, All KM Series Forward Hub To Kickdown Drum (.063") 1
42241B ..... Bearing, KM170/KM171 Reverse Sun Gear To Forward Sun Gear (.880"ID) 1
42241C ..... Bearing, KM170/KM171 Reverse Sun Gear To Forward Sun Gear (1.030"ID) 1
42241E ..... Bearing, KM171-5/KM172-5/KM175-5/KM176-5/KM177-8/A4AF1/A4AF3/A4BF1/A4BF2/W4A32
..... Reverse Sun GearTo Forward Sun Gear (1.208"ID) 1
42241M ..... Race, F4A33/W4A33 Reverse Sun Gear To Forward Sun Gear (1.225"ID) 1
42242C ..... Race, KM172/KM175 Reverse Sun Gear To Forward Sun Gear (1.028"ID) 1
42242E ..... Race, KM171-5/KM172-5/KM175-5/KM176-5/KM177-8/A4AF1/A4AF3/A4BF1/A4BF2/W4A32
..... Reverse Sun Gear To Forward Sun Gear (1.208"ID) 1
42242M ..... Bearing W/Race, F4A33/W4A33 Reverse Sun Gear To Forward Sun Gear 1
42247B ..... Bearing, KM170/KM171/KM172/KM175-5/KM176-5/KM177-8/A4AF1/W4A32 Forward Sun Gear
..... To Planet (Stays In Planet) 1
42247D ..... Bearing, KM172/KM175 (Some) Forward Sun Gear To Planet 1
42247L ..... Bearing W/Races, A4AF3/A4BF1/A4BF2 Forward Sun Gear To Planet (Stays In Planet) 1
42247M ..... Bearing W/Race, F4A33/W4A33 Forward Sun Gear To Planet (Stays In Planet) 1
42248D ..... Race, KM172/KM175 (Some) Forward Sun Gear To Planet 1
42251B ..... Bearing W/Race, KM170/KM171 Planet To Output Hub (1.805"OD) (Also Forward Hub To
..... Kickdown Drum) 1-2
42251C ..... Bearing W/Race, KM172/KM175/KM171-5/KM172-5/KM175-5/KM176-5/A4AF1 Planet To
..... Output Hub (2.045"OD) (Also KM172/KM171-5/KM172-5/KM175-5/KM176-5/A4AF1/A4AF3/
..... A4BF1/A4BF2 Forward Hub To Kickdown Drum) 1-2
42251G ..... Bearing W/Race, KM177-8/F4A33/W4A33 Planet To Output Hub (2.128"OD) (Also
..... Forward Hub To Kickdown Drum) 1-2
42251L ..... Bearing W/Races, A4BF3/A4BF1/A4BF2 Planet To Hub (.142" Thick)(2.100"OD) 1
42252B ..... Race, KM170/KM171 Planet To Output Hub (1.455"ID) 1
42252C ..... Race, KM175/KM171-5/KM172-5 Planet To Output Hub (1.528"ID) 1
42268B ..... Ball Bearing, KM170/KM171/KM171-5 Drive Gear (Front) (1.358"ID) 1
42268C ..... Ball Bearing, KM172/KM175 Drive Gear (Front) 1.575"ID (2.830"OD) 1
42268E ..... Ball Bearing, KM175-5/KM176-5/KM177-8 Drive Gear (Front) 1.770"ID 1
42268L ..... Ball Bearing, A4AF1/F4A33/W4A32/W4A33 Drive Gear (Front) 2.365"ID 1
42268LB ..... Double Ball Bearing, A4AF3/A4BF2 Drive Gear (Front)(With 4 Bolt Flange)(2.045"ID)
..... (4.109"OD With Flange) 1
42268LC ..... Ball Bearing, A4AF1 Drive Gear (Front)(2.165"ID) 1
42268Y ..... Ball Bearing, KM172-5 Drive Gear (Front) 1.575"ID (3.145"OD) 1
42271B ..... Ball Bearing, KM170/KM171/KM171-5 Drive Gear (Rear) 1.175"ID 1
42271C ..... Ball Bearing, KM172/KM175 Drive Gear (Rear) 1.375"ID 1
42271E ..... Ball Bearing, KM175-5/KM176-5/KM177-8 Drive Gear (Rear) 1.572"ID 1
42271L ..... Ball Bearing, A4AF1/F4A33/W4A32/W4A33 Drive Gear (Rear) 2.165"ID 1
42271LC ..... Ball Bearing, A4AF1/A4AF2 Drive Gear (Rear)(1.930"ID) 1
42271Y ..... Ball Bearing, KM172-5 Drive Gear (Rear) 1.575"ID 1
42273B ..... Cup Race, KM170/KM171/KM172/KM175/KM171-5/KM172-5 Pinion To Case & Driven
..... Transfer Gear To Case 1-2
42273E ..... Cup Race, KM175-5/KM176-5/KM177-8 Pinion To Case & Driven Transfer Gear To Case 1-2
42273L ..... Cup Race, A4AF1/A4AF3/A4BF1/A4BF2 Pinion To Case (2.840"OD) 1

© Whatever It Takes Transmission Parts. Inc.

PART #	WASHERS & BEARINGS (Continued)	QTY.	REFERENCE #
42273M	Cup Race, F4A33/W4A32/W4A33 Pinion To Case & Driven Transfer Gear To Case (Cast # 322009J)	1-2	
42273MA	Cup Race. F4A33 Pinion To Case & Driven Transfer Gear To Case (Cast # 57583-N)	1-2	
42274B	Cone Bearing, KM170/KM171/KM172/KM175/KM171-5/KM172-5 Pinion & Driven Transfer Gear	1-2	
42274E	Cone Bearing, KM175-5/KM176-5/KM177-8/A4AF/F4A33/W4A32/W4A33 Pinion & Driven Transfer Gear	1-2	
42274L	Cone Bearing, A4AF1/A4AF3/A4BF1/A4BF2 Pinion Shaft (17 Rollers)(1.375"ID)	1	
42275E	Shim, KM175-5/KM176-5/KM177-8/A4AF1/A4AF3/A4BF1/A4BF2 Pinion Shaft To Driven Transfer Gear (.062")	1	
42280L	Cone Bearing, A4AF3/A4BF1/A4BF2 Transfer Drive Gear (19 Rollers)(1.770"ID)	1	
42281L	Cup Race, A4AF3/A4BF1/A4BF2 Transfer Drive Gear (.627" Thick)(3.350"OD)(2.805"ID)	1	
42284B	Washer, All KM Series (Except F4A33/W4A33) Idler Gear To Case (With 1 Tab) (2.440"OD)	1	
42284M	Washer, F4A33/W4A33 Idler Gear To Case (With 1 Tab) (1.965"OD)	1	
42289LB	Ball Bearing, A4AF3 Differential Housing (Both Sides)(2.835"OD)(1.377"ID)(.715" Thick) (8 Balls)	2	
42290E	Shim, KM175-5/KM176-5/KM177-8 Differential Bearing Race To Case (.090")	1	
42290LB	Shim, A4AF3/A4BF1/A4BF2 Differential Bearing Race To Case (.063")	1	
42291M	Cup Race, F4A33 Differential Bearing	2	
42292LB	Use 42289LB	1	

PART #	GASKETS & RUBBER COMPONENTS	QTY.	REFERENCE #
42300A	Gasket, KM170 Bottom Pan (12 Bolt) 1979-81	1	
42300C	Gasket, KM171/KM172/KM175/KM171-5/KM172-5/KM175-5/KM176-5 Bottom Pan (12 Bolt)	1	
42300L	Gasket, A4AF1/A4AF3 Bottom Pan (13 Bolt) 1991-Up	1	
42300LF	Gasket, A4AF1/A4AF3 Bottom Pan (13 Bolt) (Durapreme) 1991-Up	1	
42300LA	Gasket, A4BF1/A4BF2/A4BF3 Bottom Pan (13 Bolt) 1996-Up	1	
42300LAF	Gasket, A4BF1/A4BF2/A4BF3 Bottom Pan (13 Bolt) 1996-Up (Farpak)	1	
42300M	Gasket, F4A33/W4A32/W4A33 Bottom Pan (14 Bolt) 1990-Up	1	
42300P	Gasket, KM177/KM177-8 Bottom Pan (13 Bolt) 1987-Up	1	
42309A	Seal, All KM Series Pump Bolt 1979-Up	6	MD707653
42310A	Gasket, KM170 Pump 1979-81	1	MD707652
42310B	Gasket, All KM Series (Except F4A33/W4A32/W4A33) Pump 1982-Up	1	MD722385
42310L	Gasket, A4AF1/A4AF2/A4AF3/A4BF2 Pump To Case 1991-Up	1	
42310M	Gasket, F4A33/W4A32/W4A33 Pump 1990-Up	1	MD752978
42311A	O-Ring, All KM Series Pump 1979-Up	1	MD707636
42313E	Seal, KM171-5/KM172-5/KM175-5/KM176-5/KM177-8/A4AF/F4A33 Inner Pump Gear To Converter Hub L1988-Up	1	MD729928
42318A	Gasket, KM170/KM171/KM172 Case To Bell Housing Gasket (14 Hole Cork) 1979-88	1	MD707221
42318B	Gasket, KM171/KM172/KM175 Case To Bell Housing Gasket (18 Hole Cork) 1984-88	1	MD700782
42318E	Gasket, KM171-5/KM172-5/KM175-5/KM176-5/KM177-8 Case To Bell Housing (18 Hole Metal) 1989-Up	1	MD730804
42326	Gasket, All KM Series Filter 1979-81	1	
42326A	Gasket, All KM Series Filter 1982-Up	1	
42330CAK	Repair Kit, KM175/KM175-5/KM176-5/KM177/KM177-8 Overdrive Clutch (O-Rings) 1987-UP	1	
42330CKK	Repair Kit, KM175/KM175-5/KM176-5/KM177/KM177-8 Overdrive Clutch (O-Rings, Frictions, & Steels) 1985-UP	1	
42330YK	Repair Kit, F4A33/W4A32/W4A33 Overdrive Clutch (End Clutch) 1991-Up	1	
42381A	O-Ring, All KM Series (With 2 Piece Case) Stator Tube	1	

PART #	TECHNICAL MANUALS	QTY.	REFERENCE #
42400-1	Those Darn KM's (Book 1 Identification, Theory And Testing Manual)(ATRA)	1	
42400-2	Those Darn KM's (Book 2 Problems, Fixes & Tips Manual)(ATRA)	1	
42400B	Technical Manual, KM171/KM172 (3 Speed)	1	83-171TM
42400C	Technical Manual, KM175 (4 Speed)	1	83-175TM
42400M	Technical Manual, F4A33/W4A32/W4A33 (4 Speed) 1 Piece Case	1	
42400P	Technical Manual, KM177/KM177-8 (4 Speed) With V-6	1	83-177TM

PART #	ELECTRICAL COMPONENTS	QTY.	REFERENCE #
42410B	Neutral Switch, KM171/KM172 (4 Prong Round Connector)	1	
42410C	Neutral Switch, KM175 (11 Prong Round Connector)	1	
42410E	Neutral Switch, KM171-5/KM175-5/KM176-5 (With Wire Harness)(11 Prong Rectangular Connector) Overall Length Is 10 1/4"	1	
42410EA	Neutral Switch, KM175-5 (With 7 Prong Connector) Cast # PPS-GF15	1	
42410EB	Neutral Switch, F4A22/F4A23 (With 11 Prong Oval Connector) Cast # PPS-GF15 (Connector Points Up)	1	

© Whatever It Takes Transmission Parts. Inc.

42410G	Neutral Switch, KM177-8 (With Wire Harness)(With 11 Prong Rectangle Connector) Overall Length Is 17”	1	
42410L	Neutral Switch, A4AF3/A4BF1/A4BF2 (With 11 Prong Oval Connector)(Cast # PA66-0GF15)	1	
42410M	Neutral Switch, F4A33/W4A33 (With Wire Harness)(With 11 Prong Rectangle Connector) Overall Length Is 13 1/4”	1	
42410MA	Neutral Switch, F4A33 (With Wire Harness)(With 11 Prong Oval Connector) Overall Length Is 13 3/4”	1	
42410MB	Neutral Switch, F4A33 (With 11 Prong Oval Connector) Cast # PPS-GF15 (Connector Points Down)	1	
42410Y	Neutral Switch, KM172-5 (4 Prong Square Connector)	1	
42420CK	Solenoid Kit, KM 4 Speed (4 Solenoid)(With Wire Harness)(All Hyundai 1985-Up & Mitsubishi 1987-92)	1	
T42420CK-1	Solenoid Master Kit, KM 4 Speed (With Wire Harness) (Teckpak) (All Hyundai 1985-Up & Mitsubishi 1987-92)	1	
42420EK	Solenoid Kit, All KM 4 Speed (With 4 Solenoids) With 13 OHM Lock-Up Solenoid (For Mitsubishi 1993-Up)(Includes The F4A33)(These Are Flat Nose Solenoids But They Fit The Solenoids With Long Snouts)	1	
T42420EK-1	Solenoid Master Kit, KM 4 Speed)4 Solenoid)(With Wire Harness)(For Mitsubishi 1993-Up Not For Hyundai)(Teckpak)	1	
42420LD	Solenoid Assembly, A4AF3/A4BF1 (6 Solenoids With Case Connector) 2000-Up	1	
42420MC	Solenoid Assembly, F4A33 (Diamante, 3000GT, Expo, Gallant) 1990-92	1	MD734199
42420MD	Solenoid Assembly, F4A33 (Mitsubishi, Eclipse) 1991-92	1	MD-755009
42420MG	Solenoid Assembly, F4A33 (Mitsubishi, Eclpise) 1993-94	1	MD-755008
42420MH	Solenoid Assembly, F4A33 1993-98	1	MD-754832
42421C	Solenoid, KM 4 Speed 1-2 Shift (Orange Wire) 1987-97	1	
42421CA	Solenoid, KM 4 Speed 3-4 Shift (Yellow Wire) 1987-97	1	
42425E	Solenoid, KM Series TCC (Red Wire) 1987-93	1	
42425EA	Solenoid, KM Series TCC (Lock-Up) (White Wire) 1993-Up	1	
42425EB	Solenoid, KM Series EPC (Blue Wire) 1987-97	1	
42431E	Solenoid, KM175-5/KM177-5 EPC	1	
42436B	Switch, KM171/KM172/KM175 Pulse Generator (Speed Sensors)	1	
42436E	Switch, KM171-5/KM175-5/KM176-5 Pulse Generators (Speed Sensors)	1	
42436G	Switch, KM177-8 Pulse Generator (Speed Sensor)	1	
42436LB	Switch, A4AF3/A4BF1/A4BF2 Pulse Generator (Speed Sensors)	1	
42436LC	Switch, A4AF3 Pulse Generator 2007-Up	1	
42436M	Switch, F4A33/W4A33 Pulse Generator (Speed Sensors)	1	
42436P	Switch, KM177 Pulse Generator	1	
42437J	Sensor, KM175-5/F4A22 Oil Temperature (TOT) 1989-95	1	
42437L	Sensor, A4AF1/A4AF2/A4BF2/A4BF3/F4A32 Oil Temperature (TOT) 1993-99	1	
42437M	Sensor, F4A33/W4A33 Oil Temperature (Brass)	1	
42437MA	Sensor, F4A33/W4A33 Oil Temperature (TOT) (Plastic) 1991-99	1	
42440C	Switch, KM175/KM177 Kickdown Servo 1985-88	1	
42440E	Switch, KM175-5/KM177-8 Kickdown Servo 1989-Up	1	
42440J	Switch, KM176-5 Kickdown Servo	1	
42440M	Switch, F4A33/W4A33 Kickdown Servo	1	

PART #	MISC. COMPONENTS	QTY.	REFERENCE #
42484A	Plug, KM Series Servo Air Exhaust Elbow	1	45245-37000
42494M	Filler Tube, F4A33/W4A33 (15” Long)	1	
42494MA	Filler Tube, F4A33 (6” Long)	1	

PART #	HARD PARTS	QTY.	REFERENCE #
42500A	Pump, KM170 1979-86	1	
42500B	Pump, KM171 Non Vented Body (Use With Vented Case) 1983-88	1	
42500BA	Pump, KM171 With Vented Body (Use With Non Vented Case) 1983-88	1	
42500C	Pump, KM175 Non Vented Body (Use With Vented Case) 1985-88	1	
42500CA	Pump, KM175 With Vented Body (Use With Non Vented Case) 1985-88	1	
42500D	Pump, KM172 Non Vented Body (Use With Vented Case) 1983-88	1	
42500DA	Pump, KM172 With Vented Body (Use With Non Vented Case) 1983-88	1	
42500E	Pump, KM175-5 1988-Up	1	
42500G	Pump, KM177-8 1989-Up	1	
42500H	Pump, KM171-5/KM176-5 (With 3 Rings On Input Shaft) (1 Bushing Direct Drum) 1989-Up	1	
42500L	Pump, A4AF1 (1 Bushing Direct Drum) 1991-99 (Ring Tower Measures 1 5/8” From Washer Surface To The End)	1	
42500LB	Pump, A4BF1 (2 Bushing Direct Drum) 1991-99	1	
42500LC	Pump, A4BF2 (1 Bushing Direct Drum) 2000-Up (Ring Tower Measures 1 1/2” From Washer Surface To The End)	1	
42500LD	Pump, A4AF3 (1 Bushing Direct Drum) 2000-Up (Ring Tower Measures 1 5/16” From Washer Surface To The End)	1	

© Whatever It Takes Transmission Parts. Inc.

PART #	HARD PARTS (Continued)	QTY.	REFERENCE #
42500LE	Pump, A4BF3 (1 Caged Needle Bearing In Direct Drum) 2000-Up(Ring Tower Measures 1 5/16" From Washer Surface To The End)(Has A Steel Sleeve On The End Where The Needle Bearing Rides)	1	
42500M	Pump, F4A33/W4A33 (With 1 Ring On Input Shaft) 1990-Up	1	
42500MA	Pump, F4A33/W4A32/W4A33 (With 3 Rings On Input Shaft) (2 3/4" Long Stator Shaft) 1990-Up	1	
42500MB	Pump, F4A33/W4A32/W4A33 (With 3 Rings On Input Shaft) (2 1/2" Long Stator Shaft) 1990-Up	1	
42500P	Pump, KM177 (With 1 Ring Input Shaft) 1 Bushing Direct Drum 1987-88	1	
42500Y	Pump, KM172-5 1989-Up	1	
42510B	Pump Body W/Gears, KM171/KM172/KM175 Non Vented (Use With Vented Case) 1983-88	1	
42510BA	Pump Body W/Gears, KM171/KM172/KM175 Vented (Use With Non Vented Case) 1983-88	1	
42510E	Pump Body W/Gears, KM171-5/KM175-5/KM176-5/KM177-8 1988-Up	1	
42510L	Pump Body W/Gears, A4AF1/ A4BF1 (13 Teeth Inner Pump Gear) 1991-99	1	
42510LC	Pump Body W/Gears, A4AF3 / A4BF2 (11 Teeth Inner Pump Gear) 2000-Up	1	
42510M	Pump Body W/Gears, F4A33/W4A32/W4A33 1990-Up	1	
42510Y	Pump Body W/Gears, KM172-5 1989-Up	1	
42520B	Stator, KM171/KM172/KM175 (With 3 Ring Input Shaft) Use With Vented Case 1983-88	1	
42520BA	Stator, KM171/KM172/KM175 (With 3 Ring Input Shaft) For Non Vented Case) 1983-88	1	
42520E	Stator, KM175-5/KM172-5 (With 3 Ring Input Shaft) 2 Bushing Direct Drum 1988-Up	1	
42520G	Stator, KM177-8 (With 1 Ring On Input Shaft) 2 Bushing Direct Drum 1989-Up	1	
42520H	Stator, KM171-5/KM176-5 (With 3 Rings On Input Shaft) 1 Bushing Direct Drum 1989-Up	1	
42520HA	Stator, KM171-5 (With 1 Ring On Input Shaft) 1 Bushing Direct Drum 1989-Up	1	
42520L	Stator, A4AF1 (1 Bushing Direct Drum) 1991-99 (Ring Tower Measures 1 5/8" From Washer Surface To The End)	1	
42520LB	Stator, A4BF1 (2 Bushing Direct Drum) 1991-99 (Ring Tower Measures 1 7/8" From Washer Surface To The End)	1	
42520LC	Stator, A4BF2 (1 Bushing Direct Drum) 2000-Up (Ring Tower Measures 1 1/2" From Washer Surface To The End)	1	
42520LD	Stator, A4AF3 (1 Bushing Direct Drum) 2000-Up (Ring Tower Measures 1 5/16" From Washer Surface To The End) (Can Use 42520LEK)	1	
42520LE	Stator, A4BF3 (1 Caged Needle Bearing In Direct Drum) (Ring Tower Measures 1 5/16" From Washer Surface To The End) (Has A Steel Sleeve On The End Where The Needle Bearing Rides)	1	
42520LEK	Stator/Drum Kit, A4BF3 (1 Caged Needle Bearing In Direct Drum)(Ring Tower Measures 1 5/16" From Washer Surface To The End)(Has A Steel Sleeve On The End Where The Needle Bearing Rides)	1	
42520M	Stator, F4A33/W4A33 (With 1 Ring On Input Shaft) 1990-Up	1	
42520MA	Stator, F4A33/W4A32/W4A33 (With 3 Rings On Input Shaft) 1990-Up (2 3/4" Long Shaft)	1	
42520MB	Stator, F4A33/W4A32/W4A33 (With 3 Rings On Input Shaft) 1990-Up (2 1/2" Long Shaft)	1	
42520P	Stator, KM177 (With 1 Ring Input Shaft) 1 Bushing Direct Drum 1987-88	1	

PART #	PUMP COMPONENTS	QTY.	REFERENCE #
42507A-5	Check Ball, KM Series Pump Stator	1	16011-10000
42530E	Pump Gears, KM171-5/KM172-5/KM175-5/KM176-5/KM177-8/A4AF	1	
42530M	Pump Gears, W4A32/F4A33/W4A33	1	

PART #	HARD PARTS (Continued)	QTY.	REFERENCE #
42550C	Drum, KM175 Overdrive (3 Clutch) (1 Groove On ID) 1985-89	1	
42550E	Drum, KM175-5/KM176-5/A4AF1 Overdrive (3 Clutch) (Stepped Lugs On OD) (1 1/8"Tall)	1	
42550EA	Drum, KM175-5/KM176-5 Overdrive (3 Clutch) (Lugs On OD Are Not Stepped)	1	
42550G	Drum, KM177-8/F4A23 Overdrive (4 Clutch) (Stepped Lugs On OD)	1	
42550GA	Drum, KM177-8/A4BF1/A4BF2 Overdrive (4 Clutch)(Lugs On OD Are Not Stepped)(1 1/4"Tall)	1	
42550L	Drum, A4BF Overdrive (3 Clutch) (1 Groove On OD)(1 5/8" Tall)	1	
42550LA	Drum, A4AF3 Overdrive (5 Clutch)(No Groove On OD)(1 3/4" Tall)	1	
42550M	Drum, F4A33/W4A32/W4A33 Overdrive (4 Clutch) (1.230"ID Piston) 1990-Up	1	
42554BK	Drum, KM171 Forward With Input Shaft (2 Clutch)	1	
42554C	Drum, KM175 Forward Without Shaft (3 Clutch) 5 5/8"OD 1985-89	1	
42554DK	Drum, KM172 Forward With Input Shaft (3 Clutch)	1	
42554E	Drum, KM175-5 / (KM177-8 Some) / A4BF1 Forward Without Shaft (3 Clutch) 5 5/8"OD (.640" Tall Inner Piston Hub) 1988-Up	1	
42554G	Drum, KM177-8 (Some) Forward Without Shaft (3 Clutch) 5 5/8"OD (.570" Tall Inner Piston Hub) 1994-Up	1	
42554H	Drum, KM171-5 Forward Without Shaft (2 Clutch) (5 5/8"OD) 1989-Up	1	
42554HK	Drum, KM171-5 Forward With 3 Ring Input Shaft (2 Clutch) (5 5/8"OD) 1989-Up	1	
42554J	Drum, KM176-5/A4AF1 Forward Without Shaft (2 Clutch) (5 5/8"OD) 1989-Up	1	

© Whatever It Takes Transmission Parts. Inc.

42554L.....Drum, A4BF2 Forward Without Shaft (5 Clutch) (5 1/2"OD) (With 1" Tall Inner Piston Hub) .....2000-Up .....1 .....
42554LA .....Drum, A4AF3 Forward Without Shaft (4 Clutch) (5 1/2"OD) (With 7/8" Tall Inner Piston Hub) .....2000-Up .....1 .....
42554M.....Drum, F4A33/W4A33 Forward Without Shaft (5 Clutch) 6"OD 1990-Up .....1 .....
42554YK.....Drum, KM172-5 Forward With Input Shaft (3 Clutch) 1989-Up.....1 .....
42555B .....Drum, KM171 Direct (2 Clutch) 4.50"OD Piston (8 Lugs) 1983-88 .....1 .....
42555BA.....Drum, KM171 Direct (2 Clutch) 5.00"OD Piston (8 Lugs) 1983-88 .....1 .....
42555C.....Drum, KM175 Direct (3 Clutch) 1 3/4" Tall (1 Bushing) 1985-89.....1 .....
42555D.....Drum, KM172 Direct (3 Clutch) 1 1/2" Tall (1 Bushing) 1983-89 (Has A .085" Snap .....Ring Groove For Snap Ring # 879).....1 .....
42555DA.....Drum, KM172 Direct (3 Clutch) 1 1/2" Tall (1 Bushing) 1983-89 (Has A .060" Snap .....Ring Groove For Snap Ring # 879).....1 .....
42555E .....Drum, KM175-5/KM177-8/A4BF1 Direct (3 Clutch) 1 5/8" Tall (2 Bushing) 1988-Up .....1 .....
42555H.....Drum, KM171-5/KM176-5/A4AF Direct (2 Clutch) 1 Bushing (12 Lugs) 1989-Up .....1 .....
42555M.....Drum, F4A33/W4A33 Direct (4 Clutch) 2 Bushings 1990-Up .....1 .....
42555L.....Drum, A4AF3 Direct Clutch (2 Clutch)(1.325" Tall)(1 Bushing 5/16" Wide)(Lugs Are 1/4" Down .....From The Top Of Drum) 2000-Up .....1 .....
42555LA .....Drum, A4BF3 Direct Clutch (3 Clutch)(1.550" Tall)(1 Bushing 1/2" Wide)(Lugs Are 1/2" Down .....From The Top Of Drum) 2000-Up .....1 .....
42555LE .....Drum, A4BF3 Direct Clutch (2 Clutch)(1.325" Tall)(1 Caged Needle Bearing Inside Instead .....Of A Bushing) .....1 .....
42555M.....Drum, F4A33/W4A33 Direct (4 Clutch)(2 Bushing) 1990-Up.....1 .....
42555Y .....Drum, KM172-5 Direct (3 Clutch) 1 1/2" Tall (2 Bushing) 1989-Up .....1 .....
42560C.....Piston Kit, KM175 Overdrive Clutch 1985-89.....1 .....
42560E .....Piston Kit, KM175-5/KM176-5/A4AF Overdrive Clutch (Cast # D) 1988-Up.....1 .....
42560G.....Piston Kit, KM177-8/A4BF1/A4BF2 Overdrive Clutch (Cast # E) 1989-Up (Steel Piston).....1 .....
42560LB .....Piston Kit, A4AF3 Overdrive Clutch (Aluminum Piston).....1 .....
42560M.....Piston Kit, F4A33/W4A32/W4A33 Overdrive Clutch (Cast # C) 1990-Up.....1 .....
42564B .....Piston Kit, KM171/KM172 Forward Clutch 1983-88.....1 .....
42564C.....Piston Kit, KM175 Forward Clutch 1985-89 .....1 .....
42564E .....Piston Kit, KM175-5/KM176-5/KM177-8/A4AF1/A4BF1 Forward Clutch 1988-Up.....1 .....
42564H.....Piston Kit, KM171-5/KM172-5 Forward Clutch 1989-Up.....1 .....
42564L.....Piston Kit, A4AF3 Forward Clutch.....1 .....
42564M.....Piston Kit, F4A33/W4A33 Forward Clutch 1990-Up .....1 .....
42564N.....Piston Kit, W4A32 Forward Clutch 1991-Up.....1 .....
42565B .....Piston Kit, KM171/KM172 Direct Clutch (4.500"OD Piston) 1983-88 .....1 .....
42565BA.....Piston Kit, KM171/KM172 Direct Clutch (5.000"OD Piston) 1983-88 .....1 .....
42565C.....Piston Kit, KM175 Direct Clutch 1985-89.....1 .....
42565E .....Piston Kit, KM175-5/W4A32/A4BF1/A4BF2 Direct Clutch 1988-Up .....1 .....
42565H.....Piston Kit, KM171-5/KM176-5/A4AF1 Direct Clutch 1989-Up .....1 .....
42565L.....Piston Kit, A4AF3 Direct Clutch (Piston Cast #45490-22700).....1 .....
42565M.....Piston Kit, F4A33/W4A33 Direct Clutch 1990-Up .....1 .....
42565Y .....Piston Kit, KM172-5 Direct Clutch 1989-Up .....1 .....
42567B .....Piston Kit, KM171 Center Support (Low/Reverse Clutch) 1983-88 .....1 .....
42567C.....Piston Kit, KM172/KM175 Center Support (Low/Reverse Clutch) 1983-89.....1 .....
42567E .....Piston Kit, KM172-5/KM175-5/KM177-8/A4BF1/A4BF2/W4A32 Center Support (Low/Reverse .....Clutch) 1988-Up .....1 .....
42567H.....Piston Kit, KM171-5/KM176-5/A4AF1/A4AF3/F4A32 Center Support (Low/Reverse Clutch) .....1989-Up .....1 .....
42567M.....Piston Kit, F4A33/W4A33 Center Support (Low/Reverse Clutch) 1990-Up.....1 .....
42570C.....Clutch Hub, KM175 Overdrive (2 Clutch) 26 Splines 1985-89.....1 .....
42570E .....Clutch Hub, KM171-5/KM176-5/A4AF1/(A4BF1/A4BF2 Some) Overdrive (3 Clutch)(27 Splines) .....(4.030"OD)(40 Teeth Clutch Hub) 1980-Up .....1 .....
42570G.....Clutch Hub, KM177-8/W4A32 Overdrive (4 Clutch) 27 Splines (.930" Tall) 1989-Up .....1 .....
42570L.....Clutch Hub, A4AF3 (A4BF1/A4BF2 Some) Overdrive (4 Clutch)(3.660"OD)(36 Teeth Clutch .....Hub) 2000-Up.....1 .....
42570M.....Clutch Hub, F4A33/W4A33 Overdrive (4 Clutch) 40 Teeth (4.030"OD)1990-Up .....1 .....
42574B .....Clutch Hub, KM171 Forward (10 Teeth) 1983-88 .....1 .....
42574BA.....Clutch Hub, KM171 Forward (38 Teeth) 1983-88 .....1 .....
42574C.....Clutch Hub, Km172/KM175 Forward (38 Teeth) 1983-89.....1 .....
42574E .....Clutch Hub, KM172-5/KM177-5/Some KM177-8/A4BF1/A4BF2/W4A32 Forward (38 Teeth) .....1988-Up .....1 .....
42574G.....Clutch Hub, Some KM177-8 Forward (38 Teeth) With 4.060"OD At Friction Splines .....1 .....
42574H.....Clutch Hub, KM171-5/KM176-5/A4AF Forward (38 Teeth) 1989-Up.....1 .....
42574L.....Clutch Hub, A4BF2 Forward (38 Teeth)(5 Clutch)(1.510" Overall Height)(.960"Thick At .....Friction Splines) .....1 .....
42574LA .....Clutch Hub, A4AF3 Forward (38 Teeth)(4 Clutch)(1.190" Overall Height)(.775" Thick At .....Friction Splines) .....1 .....
42574M.....Clutch Hub, F4A33/W4A33 Forward (42 Teeth) 5 Clutch (27 Splines) 1.580" Tall 1990-Up.....1 .....

© Whatever It Takes Transmission Parts. Inc.

PART #	HARD PARTS (Continued)	QTY.	REFERENCE #
42583B	Planet Kit, KM171 1983-88	1	
42583C	Planet Kit, KM175 (26 Teeth Forward Sun Gear) 1985-89	1	
42583CA	Planet Kit, KM175 (29 Teeth Forward Sun Gear) 1985-89	1	
42583D	Planet Kit, KM172 (15/16" Thick Low/Reverse Clutch Hub) 1983-88	1	
42583DA	Planet Kit, KM172 (13/16" Thick Low/Reverse Clutch Hub) 1983-88	1	
42583E	Planet Kit, KM175-5 / A4AF-2 (No Groove) Lug Height Is .950" (Can Use 42583EA) 1988-Up	1	
42583EA	Planet Kit, KM175-5 / A4BF-2 (1 Groove) Lug Height Is .950" (Can Use 42583E) 1988-Up	1	
42583G	Planet Kit, KM177-8 (No Groove) 1989-Up (Planet With Sun Gears & Bearings Less Ring Gear) Retro Fits With The 42583GA (Forward Sungear 29 Teeth / Reverse Sun Gear 34 Teeth)	1	
42583GA	Planet Kit, KM177-8/W4A32 (1 Groove) Can Use 42583G 1989-Up (Contains: Planet W/Sprag, Forward & Reverse Sun Gears, Bearings, Races)	1	
42583H	Planet Kit, KM171-5 (No Groove) 1989-Up	1	
42583J	Planet Kit, KM176-5/A4AF1/A4AF2 (Lug Height Is .844") (Bearing #247 Has 1 Race On The Bottom) 1989-Up	1	
42583LB	Planet Kit, A4AF3 (Lug Height Is .844")(Bearing #247 Has 2 Races) 2002-Up	1	
42583LC	Planet Kit, A4BF1/A4BF2 (Lug Height Is .950") (Bearing #247 Has 2 Races) 2002-Up	1	
42583M	Planet Kit, F4A33/W4A33 1990-Up	1	
42583Y	Planet Kit, KM172-5 1989-Up	1	
42584BK	Planet W/Sprag, KM171 1983-88	1	
42584CK	Planet W/Sprag, KM175 (Has A 26 Tooth Forward Sun Gear) 1985-89	1	
42584CA	Planet W/Sprag, KM175 (Has A 29 Tooth Forward Sun Gear) 1985-89	1	
42584DK	Planet W/Sprag, KM172 (15/16" Thick Low/Reverse Clutch Hub) 1983-88	1	
42584DAK	Planet W/Sprag, KM172 (13/16" Thick Low/Reverse Clutch Hub) 1983-88	1	
42584EK	Planet W/Sprag, KM175-5 (22 Teeth On Short Gears With No Groove) 1988-Up	1	
42584EAK	Planet W/Sprag, KM175-5 (22 Teeth On Short Gears With 1 Groove) 1988-Up	1	
42584EBK	Planet W/Sprag, KM175-5 (19 Teeth On Short Gears With 1 Groove) 1988-Up	1	
42584GK	Planet W/Sprag, KM177-8 (No Groove On Short Gears) 1989-Up	1	
42584GAK	Planet W/Sprag, KM177-8/W4A32 (With 1 Groove On Short Gears) 1989-Up	1	
42584HK	Planet W/Sprag, KM171-5 1989-Up	1	
42584JK	Planet W/Sprag, KM176-5/A4AF 1989-Up	1	
42584MK	Planet W/Sprag, F4A33/W4A33 1990-Up	1	
42584YK	Planet W/Sprag, KM172-5 1989-Up	1	
42594B	Ring Gear, All KM (Except F4A33/W4A33) Annulus (74 Teeth)(22 Outer Lugs)(5 1/4"OD)	1	
42594M	Ring Gear, F4A33/W4A33 Annulus (5 7/8"OD) 1990-Up	1	
42604LB	Hub, A4AF3 Annulus Gear (2.550" Overall Height)(3/4" Spline Length)(Uses A Nut To Hold On The Gear)	1	
42604LC	Hub, A4BF1/A4BF2 Annulus Gear (2.940" Overall Height)(1 1/8" Spline Length)(Uses A Snap Ring To Hold On The Gear)	1	
42605B	Hub, KM171 Annulus With 22 Teeth Gear & Ball Bearings 1983-88	1	
42605C	Hub, KM175 Annulus With 20 Teeth Gear & Ball Bearings 1985-89	1	
42605D	Hub, KM172 Annulus With 20 Teeth Gear & Ball Bearings 1983-88	1	
42605E	Hub, KM175-5/KM176-5 Annulus With 24 Teeth Gear & Ball Bearings (No Groove) 1988-Up	1	
42605EA	Hub, KM175-5/KM176-5 Annulus With 24 Teeth Gear & Ball Bearings (1 Groove) 1988-Up	1	
42605EB	Hub, KM175-5/KM176-5 Annulus With 24 Teeth Gear & Ball Bearings (2 Groove) 1988-Up	1	
42605G	Hub, KM177-8 Annulus With 24 Teeth Gear & Ball Bearings (No Groove) 1989-Up	1	
42605GA	Hub, KM177-8 Annulus With 24 Teeth Gear & Ball Bearings (1 Groove) 1989-Up	1	
42605H	Hub, KM171-5 Annulus With 24 Teeth Gear & Ball Bearings 1989-Up	1	
42605L	Hub, A4AF1 Annulus With 58 Teeth Gear & Ball Bearings 1991-Up	1	
42605LB	Hub, A4AF3 (No Longer Available) Use 42604LB & 42710LB	1	
42605LC	Hub, A4BF1/A4BF2 (No Longer Available) Use 42604LC & 42710LC	1	
42605M	Hub, F4A33 Annulus With 35 Teeth Gear (3.680"OD) And Ball Bearings 1990-Up	1	
42605MA	Hub, F4A33/W4A32/W4A33 Annulus With 35 Teeth Gear (3.705"OD) And Ball Bearings 1990-Up	1	
42605Y	Hub, KM172-5 Annulus With 23 Teeth Gear & Ball Bearings 1989-Up	1	
42612B	Sun Gear, KM171 Forward (26 Teeth) 3.780" Long 1983-88	1	
42612C	Sun Gear, KM175 Forward (26 Teeth) 3.195" Long (1.020"OD Of Shaft) 1985-89	1	
42612CA	Sun Gear, KM175 Forward (29 Teeth) 3.195" Long (1.020"OD Of Shaft) 1985-89	1	
42612D	Sun Gear, KM172 Forward (26 Teeth) 3.930" Long 1983-88	1	MD-715285
42612DA	Sun Gear, KM172 Forward (29 Teeth) 3.760" Long 1983-88	1	
42612E	Sun Gear, KM175-5 Forward (26 Teeth) 3.195" Long (1.095"OD Of Shaft) 1.610"OD Of Gear (No Groove) 1988-Up	1	MD-758066
42612EA	Sun Gear, KM175-5 Forward (26 Teeth) 3.195" Long (1.095"OD Of Shaft) 1.610"OD Of Gear (1 Groove) 1988-Up	1	
42612EB	Sun Gear, KM175-5 Forward (26 Teeth) 3.195" Long (1.095"OD Of Shaft) 1.775"OD Of Gear (1 Groove) 1988-Up	1	
42612G	Sun Gear, KM177-8 Forward (29 Teeth) 3.195" Long (No Groove) 1989-Up	1	
42612GA	Sun Gear, KM177-8/W4A32 Forward (29 Teeth) 3.195" Long (1 Groove) 1989-Up	1	

© Whatever It Takes Transmission Parts. Inc.

42612H	Sun Gear, KM171-5 Forward (26 Teeth) 3.740” Long 1989-Up	1	MD-758035
42612J	Sun Gear, KM176-5 Forward (26 Teeth) 3.010” Long 1989-Up	1	MD-758038
42612LA	Sun Gear, A4AF3 Forward (26 Teeth)(3.040” Long)	1	
42612LB	Sun Gear, A4BF1/A4BF2 Forward (29 Teeth)(1 Groove)(3.222” Long)	1	
42612M	Sun Gear, F4A33/W4A33 Forward (29 Teeth) 3.435” Long 1990-Up	1	
42612Y	Sun Gear, KM172-8 Forward (26 Teeth) 3.925” Long 1989-Up	1	
42614B	Sun Gear, KM171 Reverse (34 Teeth) 2.075” Long (No Groove) 1983-88	1	
42614C	Sun Gear, KM175 Reverse (34 Teeth) 2.275” Long (2 Grooves) With Snap Ring 1985-88	1	
42614D	Sun Gear, KM175 Reverse (34 Teeth) 2.275” Long (No Grooves) With Snap Ring 1985-88	1	MD-712766
42614DA	Sun Gear, KM172 Reverse (34 Teeth) 2.075” Long 1983-88	1	
42614E	Sun Gear, KM175-5 Reverse (34 Teeth) 2.265” Long (No Groove) Takes 1 Snap Ring And 1 Sealing Ring 1988-Up	1	MD-758068
42614EA	Sun Gear, KM175-5/A4BF1/A4BF2 Reverse (34 Teeth) 2.265” Long (1 Groove In Middle) Takes 1 Snap Ring And 1 Sealing Ring 1988-Up	1	
42614GA	Sun Gear, KM177-8 Reverse (34 Teeth) 2.265” Long (1 Groove At Edge) Takes 1 Snap Ring And 1 Sealing Ring 1989-Up	1	MD-722185
42614GB	Sun Gear, KM177-8 Reverse (34 Teeth) 2.265” Long (No Groove) Takes 1 Snap Ring And 1 Sealing Ring 1989-Up	1	
42614H	Sun Gear, KM171-5/KM176-5/A4AF1/A4AF3 Reverse (34 Teeth) 2.080” Long (Takes 1 Snap Ring And 1 Sealing Ring 1989-Up	1	MD-758040
42614M	Sun Gear, F4A33/W4A33 Reverse (34 Teeth) 2.305” Long (Takes 1 Sealing Ring) 1990-Up	1	MD-735060
42614Y	Sun Gear, KM172-5 Reverse (34 Teeth) 2.265” Long (Takes 1 Snap Ring & 1 Sealing Ring) 1989-Up	1	
42622B	Shell, KM171 (Kickdown Drum) 1983-88	1	
42622C	Shell, KM172/KM175/KM177 (Kickdown Drum) 1983-89	1	
42622E	Shell, KM172-5/KM175-5/KM177-8/A4BF1/A4BF2/F4A32/W4A32 1989-Up (3 7/8” Overall Height)	1	
42622H	Shell, KM171-5/KM176-5/A4AF1/A4AF3 (3 1/2” Overall Height) 1989-Up	1	
42622M	Shell, F4A33/W4A33 (4 1/8” Overall Height) 1990-Up	1	
42630B	Center Support, KM171/KM172 Some (Aluminum) 2.080” Wide (24 Teeth Steels) 1 Bushing 1983-88	1	
42630C	Center Support, KM175/KM172 Some (Aluminum) 2.275” Wide (24 Teeth Steels) 2 Bushings 1983-89	1	
42630E	Center Support, KM172-5/KM175-5/KM177-8/A4BF1/A4BF2/W4A32 (Steel)(1.585” Overall Thickness) 1988-Up (With The Support Laying On A Flat Surface (Front Side Down) Measure Thru Center To Flat Surface)	1	
42630H	Center Support, KM171-5/KM176-5/A4AF1/A4AF3 (Steel)(1.460” Overall Thickness) 1989-Up (With The Support Laying On A Flat Surface (Front Side Down) Measure Thru Center To Flat Surface)	1	
42630M	Center Support, F4A33/W4A33 (Steel 1.535” Overall Thickness) 1990-Up (With The Support Laying On A Flat Surface (Front Side Down) Measure Thru Center To A Flat Surface)	1	

PART #	SPRAGS & ONE WAY CLUTCHES	QTY.	REFERENCE #
42654B	Sprag, KM170/KM171 Low/Reverse (26 Lug) Narrow 1983-88	1	MD-73185
42654C	Sprag, KM172/KM175/KM171-5/KM172-5/KM175-5/KM176-5/KM177-8/A4AF/W4A32 Low/Reverse (26 Lug) Wide (Use 74658) 1983-Up	1	
74658	Sprag, KM172/KM175/KM171-5/KM172-5/KM175-5/KM177-8/A4AF1/A4BF1/A4BF2/W4A33 Low/Reverse (26 Lug)(.700”Thick) 1983-Up	1	
42654L	Sprag, KM176-5/A4AF3 Low/Reverse (26 Lugs)(.622”Thick)	1	
42654M	Sprag, F4A33/W4A33 Low/Reverse (28 Lug) 1990-Up	1	

PART #	HARD PARTS (Continued)	QTY.	REFERENCE #
42670B	Input Shaft, KM171/KM172/KM171-5/KM172-5 (Sold With Forward Drum)	1	
42670C	Input Shaft, KM175 (14 3/4” Long) 3 Ring (24 Spline) 1985-89	1	
42670CA	Input Shaft, KM175 (14 15/16” Long) 3 Ring (24 Spline) 1985-89	1	
42670E	Input Shaft, KM175-5/A4BF1 (15 1/8” Long) 3 Ring (11/16”OD Of Rear Pilot) 1988-Up	1	
42670EA	Input Shaft, KM175-5/W4A32 (15 1/8” Long) 3 Ring (1/2”OD Rear Pilot) 1988-Up	1	
42670EB	Input Shaft, KM175-5/Some 177-8 (15 7/16” Long) 3 Ring (1/2”OD Rear Pilot) 1988-Up	1	
42670G	Input Shaft, KM177-8 (15 7/16” Long) 1 Ring (11/16”OD Rear Pilot) 1989-Up	1	
42670J	Input Shaft, KM176-5/A4AF1 (14 1/2” Long) 3 Ring (11/16”OD Rear Pilot) 1990-Up (With 1 O-Ring On Shaft Under Drum)	1	
42670JA	Input Shaft, A4AF3 (14 1/2” Long) 3 Ring (11/16”OD Rear Pilot) 1990-Up (With 2 O-Rings On Shaft Under Drum)	1	
42670L	Input Shaft, A4BF2 (15 1/8” Long) 3 Ring (11/16”OD Rear Pilot) 1990-Up (With 2 O-Rings On Shaft Under Drum)	1	
42670M	Input Shaft, F4A33/W4A33 (16 11/16” Long) 3 Ring 1990-Up	1	
42670MA	Input Shaft, F4A33/W4A33 (16 1/16” Long) 1 Ring 1990-Up	1	
42670MB	Input Shaft, F4A33/W4A33 (16 5/8” Long) 3 Ring (.670”OD Rear Pilot) 1990-Up	1	

© Whatever It Takes Transmission Parts. Inc.

PART #	HARD PARTS (Continued)	QTY.	REFERENCE #
42670MC	Input Shaft, F4A33/W4A33 (16 5/8" Long) 3 Ring (.510"OD Rear Pilot) 1990-Up	1	
42670P	Input Shaft, KM177 (1 Ring) 1987-88	1	
42675C	Shaft, KM175 Overdrive (26 Spline) 3.060" Long 1985-89	1	
42675E	Shaft, KM175-5/KM176-5/A4AF1/A4AF3/W4A32 Overdrive (27 Spline)(3.065" Long)1988-Up	1	
42675G	Shaft, KM177-8 Overdrive (27 Spline) 3.340" Long (The Splines On The Overdrive End Are 3/4" Long) 1989-Up	1	
42675L	Shaft, A4BF1/A4BF2 Overdrive (27 Spline) 2.914" Long	1	
42675M	Shaft, F4A33/W4A33 Overdrive (27 Spline) 3.340" Long (The Splines On The Overdrive End Are 15/16" Long) 1990-Up	1	
42677M	Output Shaft, W4A32/W4A33 Rear (15 1/2" Long) 1990-Up	1	
42679B	Idler Shaft, KM171/KM171-5/KM175-5/KM176-5 (1.175"OD) 2.740" Long 1983-Up	1	
42679C	Idler Shaft, KM172/KM175 (1.375"OD) 1983-89	1	
42679G	Idler Shaft, KM177-8 (1.175"OD) 3.085" Long 1989-Up	1	
42679M	Idler Shaft, F4A33/W4A33 (1.175"OD) 3.110" Long 1990-Up	1	
42679Y	Idler Shaft, KM172-5/W4A32 (1.175"OD) 2.725" Long 1989-Up	1	
42680B	Governor, KM171/KM171-5/KM172-5 With Valve (1.095"OD Of Weight) 1983-Up	1	
42680D	Governor, KM172 With Valve (1.295"OD Of Weight) 1983-88	1	
42686B	Cover, KM171/KM172/KM175 Pinion Shaft (Tin) 3.130"OD 1983-89	1	
42686E	Cover, KM171-5/KM172-5/KM175-5/KM176-5/KM177-8 Pinion Shaft (Tin) 3.330"OD 1988-Up	1	
42687B	Bracket, KM171/KM172/KM175 For Pinion Shaft Cover	1	
42687E	Bracket, Km171-5/KM172-5/KM175-5/KM176-5/KM177-8 For Pinion Shaft Cover	1	
42691B	Cover, KM171/KM171-5 Output Gear (Aluminum)	1	
42691D	Cover, KM172 Output Gear (Cast Iron)	1	
42692C	Plate, KM175 Overdrive Adapter (3 Bolt) 1985-89	1	
42692E	Plate, KM175-5/KM176-5/KM177-8 Overdrive Adapter (4 Bolt) 1988-Up	1	
42692L	Plate, A4AF1/A4BF1/A4BF2 Overdrive Adapter (5 Bolt)(.225" Thick) 1991-Up	1	
42692LB	Plate, A4AF3 Overdrive Adapter (4 Bolt)(4.109"OD)(Less Ball Bearings)	1	
42692M	Plate, F4A33/W4A32/W4A33 Overdrive Adapter (5 Bolt)(.275" Thick) 1990-Up	1	
42693B	Bracket, KM171/KM171-5/KM175-5/KM176-5 Holds Idler Shaft	1	
42693C	Bracket, KM172/KM175 Holds Idler Shaft	1	
42693G	Bracket, KM177-8 Holds Idler Shaft	1	
42693Y	Bracket, KM172-8 Holds Idler Shaft	1	
42710B	Gear, KM171 Transfer Drive (22 Teeth) No Groove 1983-88	1	
42710C	Gear, KM175 Transfer Drive (20 Teeth) 1 Groove 1985-89	1	
42710D	Gear, KM172 Transfer Drive (20 Teeth) No Groove 1983-88	1	
42710E	Gear, KM175-5/KM176-5 Transfer Drive (24 Teeth) No Groove (1.020" Thick) 1988-Up	1	
42710EA	Gear, KM175-5 Transfer Drive (24 Teeth) 2 Groove 1988-Up	1	
42710G	Gear, KM177-8 Transfer Drive (24 Teeth) No Groove (1.220" Thick) 1989-Up	1	
42710H	Gear, KM171-5 Transfer Drive (24 Teeth) 1 Groove 1989-Up	1	
42710L	Gear, A4AF1 Transfer Drive (58 Teeth) No Groove 1991-Up	1	
42710LB	Gear, A4AF3/A4BF2 Transfer Drive (53 Teeth) No Groove (Right Angled) (With 1 Bearing & 4 Bolt Flange)	1	
42710LBA	Gear, A4AF3/A4BF2 Transfer Drive (53 Teeth) 1 Groove (Right Angled)(With 1 Bearing & With 4 Bolt Flange)	1	
42710LC	Gear, A4BF1 Transfer Drive (53 Teeth) No Groove (Right Angled) (With Ball Bearing On Each Side Of Gear)	1	
42710M	Gear, F4A33 Transfer Drive (35 Teeth) No Groove 1990-Up	1	
42710MA	Gear, W4A32/W4A33 Transfer Drive (35 Teeth) 1 Groove 1990-Up	1	
42710Y	Gear, KM172-5 Transfer Drive (23 Teeth) 1 Groove 1989-Up	1	
42712B	Gear, KM171 Driven Transfer (25 Teeth) No Groove 1983-88	1	
42712C	Gear, KM175 Driven Transfer (23 Teeth) 2 Grooves 1985-89	1	
42712D	Gear, KM172 Driven Transfer (23 Teeth) No Groove 1983-88	1	
42712DA	Gear, KM172 Driven Transfer (23 Teeth) 1 Groove 1983-88	1	
42712E	Gear, KM175-5/KM176-5 Driven Transfer (27 Teeth) No Groove 1988-Up	1	
42712EA	Gear, KM175-5 Driven Transfer (27 Teeth) 2 Groove 1988-Up	1	
42712EB	Gear, KM175-5 Driven Transfer (27 Teeth) 1 Groove (.940" Thick) 1988-Up	1	
42712G	Gear, KM177-8 Driven Transfer (27 Teeth) No Groove (1.140" Thick) 1989-Up	1	
42712GA	Gear, KM177-8 Driven Transfer (27 Teeth) 1 Groove (1.140" Thick) 1989-Up	1	
42712H	Gear, KM171-5/KM172-5 Driven Transfer (27 Teeth) 1 Groove (.900" Thick) 1989-Up	1	
42712L	Gear, A4AF1 Driven Transfer (60 Teeth)(No Groove) 1991-Up	1	
42712LA	Gear, A4AF3 Driven Transfer (55 Teeth)(1 Groove In Center Of Gear)	1	
42712LB	Gear, A4BF1/A4BF2 Driven Transfer (55 Teeth)(No Groove)	1	
42712LC	Gear, A4AF3 Driven Transfer (55 Teeth)(1 Groove On Bearing Side Of Gear)	1	
42712M	Gear, F4A33 Driven Transfer (Is Made On The Pinion #730) 1990-Up	1	
42712MA	Gear, W4A33 Driven Transfer (43 Teeth) 1 Groove (1.100" Thick) 1990-Up	1	
42712N	Gear, W4A32 Driven Transfer (43 Teeth) 1 Groove (.860" Thick) 1991-Up	1	
42714B	Idler Gear, KM171 (34 Teeth) No Groove 1983-88	1	
42714C	Idler Gear, KM175 (30 Teeth) 1 Groove 1985-89	1	

© Whatever It Takes Transmission Parts. Inc.

42714D ..... Idler Gear, KM172 (30 Teeth) No Groove 1983-88 1
42714E ..... Idler Gear, KM175-5/KM176-5 (32 Teeth) No Groove (.930" Thick) 1988-Up 1
42714EA ..... Idler Gear, KM175-5 (32 Teeth) 2 Groove (.930" Thick) 1988-Up 1
42714EB ..... Idler Gear, KM175-5/KM176-5 (32 Teeth) 1 Groove (.930" Thick) 3.575"OD 1988-Up 1
42714G ..... Idler Gear, KM177-8 (32 Teeth) NO Groove (1.115" Thick) 1989-Up 1
42714GA ..... Idler Gear, KM177-8 (32 Teeth) 1 Groove (1.115" Thick) 1989-Up 1
42714H ..... Idler Gear, KM171-5 (32 Teeth) 1 Groove (.874" Thick) 1989-Up 1
42714HA ..... Idler Gear, KM171-5 (32 Teeth) 2 Groove (.874" Thick) 1
42714M ..... Idler Gear, F4A33 (38 Teeth) No Groove (4.080"OD) 1990-Up 1
42714MA ..... Idler Gear, F4A33/W4A32 (37 Teeth) 1 Groove (4.010"OD) 1990-Up 1
42714MB ..... Idler Gear, F4A33 (37 Teeth) 2 Groove 1990-Up 1
42714MC ..... Idler Gear, W4A33 (38 Teeth) No Groove (4.000"OD) 1990-Up 1
42714MD ..... Idler Gear, W4A33 (37 Teeth) No Groove (4.015"OD) 1990-Up 1
42714Y ..... Idler Gear, KM172-5 (32 Teeth) 1 Groove (.935" Thick) 3.630"OD 1989-Up 1
42715B ..... Differential, KM171 (57 Teeth Ring Gear) 19 Teeth Speed-O Gear 1
42715BA ..... Differential, KM171 (57 Teeth Ring Gear) 36 Teeth Speed-O Gear (.925" Thick Ring Gear) 1
42715C ..... Differential, KM172/KM175 (51 Teeth Ring Gear) 19 Teeth Speed-O Gear 1
42715CA ..... Differential, KM172/KM175 (51 Teeth Ring Gear) 36 Teeth Speed-O Gear 1
42715CC ..... Differential, KM172/KM175 (52 Teeth Ring Gear) 1.125" Thick Gear (1 Groove)
..... 36 Teeth Speed-O Gear 1
42715E ..... Differential, KM175-5 (57 Teeth) 1.355" Thick Gear (1 Groove Gear) 36 Teeth Speed-O Gear 1
42715EA ..... Differential, KM175-5 (57 Teeth) 1.355" Thick Gear (2 Groove Gear) 36 Teeth Speed-O Gear 1
42715EB ..... Differential, KM175-5 (57 Teeth) 1.125" Thick Gear (1 Groove Gear) 36 Teeth Speed-O Gear 1
42715EC ..... Differential, KM175-5 (57 Teeth) 1.100" Thick Gear (1 Groove Gear) 36 Teeth Speed-O Gear 1
42715EG ..... Differential, KM175-5 (58 Teeth) 1.352" Thick Gear (2 Groove Gear) 36 Teeth Speed-O Gear 1
42715G ..... Differential, KM177-8 (56 Teeth) 1.365" Thick Gear (1 Groove Gear) 36 Teeth Speed-O Gear 1
42715GA ..... Differential, KM177-8 (52 Teeth) 1.352" Thick Gear (2 Groove Gear) 36 Teeth Speed-O Gear 1
42715GB ..... Differential, KM177-8 (58 Teeth) 1.486" Thick Gear (3 Groove Gear) 36 Teeth Speed-O Gear 1
42715H ..... Differential, KM171-5/KM176-5 (64 Teeth) .925" Thick Gear (No Groove Gear) 1
42715J ..... Differential, KM176-5 (66 Teeth) .925" Thick Gear (1 Groove Gear) 1
42715JC ..... Differential, KM176-5 (65 Teeth) .925" Thick Gear (1 Groove Gear) 1
42715L ..... Differential, A4AF3 (74 Teeth Ring Gear)(1.127" Thick)(No Groove)(36 Teeth Speed-O Gear) 1
42715LA ..... Differential, A4AF1 (74 Teeth Ring Gear)(1.127" Thick)(2 Groove)(36 Teeth Speed-O Gear)
..... (Housing Is 5 1/8" Overall Height From Front To Rear) 1
42715LAA ..... Differential, A4AF1 (74 Teeth Ring Gear)(1.127" Thick)(2 Groove)(36 Teeth Speed-O Gear)
..... (Housing Is 5 5/8" Overall Height From Front To Rear) 1
42715LAB ..... Differential, A4AF1 (74 Teeth Ring Gear)(1.127" Thick)(1 Groove)(36 Teeth Speed-O Gear) 1
42715LB ..... Differential, A4AF2 (67 Teeth Ring Gear)(1.205" Thick)(No Groove)(36 Teeth Speed-O Gear) 1
42715LC ..... Differential, A4AF2 (67 Teeth Ring Gear)(1.205" Thick)(2 Groove)(36 Teeth Speed-O Gear) 1
42715LD ..... Differential, A4BF1 (69 Teeth Ring Gear)(1.205" Thick)(1 Groove)(36 Teeth Speed-O Gear) 1
42715M ..... Differential, F4A33 (58 Teeth) 3 Groove (1.110"ID Axle Housing) Cone Bearings 1
42715MA ..... Differential, F4A33 (57 Teeth) No Groove 1
42715MAA ..... Differential, F4A33 (57 Teeth) 2 Groove (1.110"ID Axle Housing) Cone Bearings 1
42715MAB ..... Differential, F4A33 (58 Teeth) 3 Groove (1.041"ID Axle Housing) Cone Bearings 1
42715MAC ..... Differential, F4A33 (58 Teeth) 2 Groove (1.041"ID Axle Housing) 1
42715MB ..... Differential, W4A32/W4A33 (72 Teeth Ring Gear) 1 Groove 1
42715MC ..... Differential, W4A32/W4A33 (72 Teeth) 2 Groove (1.040"ID Axle Housing) Ball Bearings 1
42715Y ..... Differential, KM172-5 (56 Teeth) 1.125" Thick (No Groove Gear) 36 Teeth Speed-O Gear 1
42718M ..... Center Differential Assembly, W4A32/W4A33 (8 Bolt) 1990-Up 1
42719M ..... Viscous Coupling Unit, W4A32/W4A33 (4 1/4"OD) With 2 Splines 1
42725L ..... Retainer, A4AF1 Differential (5 Bolt) Aluminum (3.850"OD Where The O-Ring Sets) 1
42725LA ..... Retainer, A4AF3/A4BF1/A4BF2 Differential (5 Bolt) Aluminum (4.090"OD Where The O-Ring
..... Sets) 1
42725M ..... Retainer, F4A33/W4A32/W4A33 Differential (4 Bolt) Cast Iron 1
42726LB ..... Retainer, A4AF3/A4BF1/A4BF2 Differential Cup (2 Bolt)(Aluminum) 1
42726M ..... Retainer, F4A33/W4A32/W4A33 Differential Cup (2 Bolt)(Aluminum) 1
42728M ..... Retainer, W4A32/W4A33 Center Differential (Aluminum) 1990-Up 1
42730B ..... Pinion, KM171 (18 Teeth) Governor Type With Bearing On End Of Shaft 1983-88 1
42730C ..... Pinion, KM175 (16 Teeth) With Bearing On End Of Shaft 1985-89 1
42730D ..... Pinion, KM172 (16 Teeth) Governor Type With Bearing On End Of Shaft 1983-88 1
42730E ..... Pinion, KM175-5 (16 Teeth) 1 Groove Next To Pilot (1.170" Thick Gear) Bearing On
..... Middle Of Shaft 1988-Up 1
42730EA ..... Pinion, KM175-5 (16 Teeth) 1 Groove Next To Pilot (1.400" Thick Gear) Bearing On
..... Middle Of Shaft 1988-Up 1
42730EB ..... Pinion, KM175-5 (16 Teeth) 1 Groove Next To Bearing (1.170" Thick Gear) Bearing
..... On Middle Of Shaft 1988-Up 1
42730EC ..... Pinion, KM175-5 (15 Teeth) No Groove (1.500" Thick Gear) 1
42730ED ..... Pinion, KM175-5 (15 Teeth) No Groove (1.432" Thick Gear) 10 1/2" Long (3 Grooves
..... On Shaft Next To Bearing) 1

© Whatever It Takes Transmission Parts. Inc.

PART #	HARD PARTS (Continued)	QTY.	REFERENCE #
42730EDA	Pinion, KM175-5 (15 Teeth) No Groove (1.432” Thick Gear) 10 1/2” Long (3 Grooves On Shaft, 2 Next To The Bearing	1	
42730EE	Pinion, KM175-5 (16 Teeth) 1 Groove (1 3/8” Thick Gear) 10 1/2” Long (3 Grooves On Shaft)	1	
42730EF	Pinion, KM175-5 (16 Teeth) 1 Groove (1 3/8” Thick Gear) 10 1/2” Long (2 Grooves On Shaft)	1	
42730EG	Pinion, KM175-5 (15 Teeth) 1 Groove (10 1/2” Long) 3 Grooves On Shaft	1	
42730EH	Pinion, KM175-5 (15 Teeth) No Grooves (1.580” Thick Gear) 10 1/2” Long (3 Grooves On Shaft)	1	
42730G	Pinion, KM177-8 (17 Teeth) 2.370”OD Of Gear 1989-Up (Bearing On Middle Of Shaft)	1	
42730H	Pinion, KM171-5 (20 Teeth) No Groove (Bearing On End Of Shaft) 1989-Up	1	
42730HA	Pinion, KM171-5 (20 Teeth) 2 Grooves (Bearing On End Of Shaft) 1989-Up	1	
42730J	Pinion, KM176-5 (18 Teeth) 1 Groove (2.180”OD Of Gear) 1989-Up (Bearing On Middle Of Shaft)	1	
42730JA	Pinion, KM176-5 (17 Teeth) No Groove (2.075”OD Of Gear) 1989-Up (Bearing On Middle Of Shaft)	1	
42730JB	Pinion, KM176-5 (17 Teeth) 1 Groove (2.075”OD Of Gear) 1989-Up (Bearing On Middle Of Shaft)	1	
42730JC	Pinion, KM176-5 (16 Teeth) 1 Groove (2.235”OD Of Gear) 1989-Up (Bearing On Middle Of Shaft)	1	
42730JD	Pinion, KM176-5 (18 Teeth) 2 Groove (2.180”OD Of Gear) 1989-Up (Bearing On Middle Of Shaft)	1	
42730JE	Pinion, KM176-5 (18 Teeth) No Groove (2.250”OD Of Gear) 1989-Up	1	
42730LA	Pinion, A4AF1 (21 Teeth Gear)(2.430”OD)(No Groove) Bearing On Middle Of Shaft (9 1/2” Long)	1	
42730LB	Pinion, A4AF3 (19 Teeth Gear)(No Groove)(1 ID Groove On Shaft)(9 3/4” Long)	1	
42730LC	Pinion, A4AF2 (19 Teeth Gear)(2.475”OD)(No Groove) Bearing On Middle Of Shaft (10 “ Long)	1	
42730LD	Pinion, A4BF1 (18 Teeth)(No Groove)(1 ID Groove In Middle Of Shaft)(10” Long)	1	
42730LE	Pinion, A4BF2 (16 Teeth)(No Groove)(10 1/4” Long)	1	
42730M	Pinion, F4A33 (16 Teeth) With 43 Teeth Transfer Gear 1990-Up	1	
42730MA	Pinion, F4A33 (18 Teeth) 3 Groove (With 43 Teeth Transfer Gear) 1990-Up	1	
42730MAA	Pinion, F4A33 (18 Teeth) 2 Groove (With 43 Teeth Transfer Gear) 1990-Up	1	
42730MB	Pinion, F4A33 (20 Teeth) With 43 Teeth Transfer Gear 1990-Up	1	
42730MC	Pinion, W4A32/W4A33 (20 Teeth) 1 Groove On Edge (7 1/4” Long) 1990-Up	1	
42730MD	Pinion, W4A33 (20 Teeth) 1 Groove In Center (7 1/4” Long) 1990-Up	1	
42730Y	Pinion, KM172-5 (17 Teeth) Governor Type (With Bearing On End) 1989-Up	1	
42734M	Retainer, W4A32/W4A33 Pinion (Aluminum) 3 Bolt 1990-Up	1	
42735M	Retainer, F4A33 Driven Transfer Gear (2.955”ID) 1990-Up (Without Oil Shield)	1	
42735MA	Retainer, F4A33 Driven Transfer Gear (3.030”ID) 1990-Up (Without Tin Oil Shield)	1	
42735MB	Retainer, W4A33 Driven Transfer Gear (2.955”ID) 1990-Up (With Tin Oil Shield)	1	
42735MC	Retainer, W4A32/W4A33 Driven Transfer Gear (2.955”ID) 1990-Up (With Tin Oil Shield) Machined O-Ring Area Is 13/16” Wide	1	
42740B	Valve Body, KM171 (1 Solenoid) Round Connector (Cast # 3A/T3 Filter Side)	1	
42740BA	Valve Body, KM171 (1 Solenoid) Square Connector Z(Cast # H-172-2)	1	
42740C	Valve Body, KM175 (4 Solenoid) Round Connector (Cast # 175 Filter Side)	1	
42740D	Valve Body, KM172 (1 Solenoid) Round Connector (Cast # 3A/T1 Filter Side)	1	
42740E	Valve Body, KM175-5 (4 Solenoid) Square Connector (Cast # 177 Filter Side)	1	
42740EA	Valve Body, KM175-5 (4 Solenoid) Square Connector (Cast # 3A32 Filter Side)	1	
42740EB	Valve Body, KM175-5/A4AF/F4A33 (4 Solenoid) Square Connector (Cast # 4A3) Long Wire Harness	1	
42740EC	Valve Body, KM175-5/A4AF (4 Solenoid) Square Connector (Cast # DOHC 8) Long Wire Harness	1	
42740G	Valve Body, KM177-8 (3 Solenoid) Square Connector (Cast # 4AT1A Filter Side)	1	
42740H	Valve Body, KM171-5 (1 Solenoid) Square Connector (Cast # 3A/T3 Filter Side)	1	
42740J	Valve Body, KM176-5 (4 Solenoid) Square Connector (Cast # 4AT Filter Side) 14” Long Wire Harness	1	
42740JA	Valve Body, KM176-5 (4 Solenoid) Square Connector (Cast # 4AT Filter Side) 27” Long Wire Harness	1	
42740LA	Valve Body, A4AF1 (4 Solenoid) Square Connector (Cast # A4AF1 Filter Side)	1	
42740LB	Valve Body, A4AF (4 Solenoid) Square Connector (Cast # X-3 Filter Side)	1	
42740LC	Valve Body, A4BF1/A4BF2 (4 Solenoid) Square Connector (Cast # A4AF2 Filter Side)	1	
42740LD	Valve Body, A4AF3 (6 Solenoid) (Cast # A4AF3 On Both Sides)	1	
42740LE	Valve Body, A4AF (4 Solenoid) Square Connector (Cast # V-6 #3 Filter Side)	1	
42740M	Valve Body, F4A33 (3 Solenoid) Square Connector (Cast # 4A31 Filter Side)	1	
42740MA	Valve Body, F4A33 (4 Solenoid) Square Connector (Cast # 4A33 Filter Side) (Can Use 42740EB)	1	
42740MB	Valve Body, W4A33 (3 Solenoid) Square Connector (Cast # 4A33 Filter Side)	1	
42740N	Valve Body, W4A332 (4 Solenoid) Square Connector (Cast # 4A36 Filter Side)	1	
42740Y	Valve Body, KM172-5 (1 Solenoid) Square Connector (Cast # 3A/T6 Filter Side)	1	

© Whatever It Takes Transmission Parts. Inc.

PART #	VALVE BODY COMPONENTS	QTY	REFERENCE #
S42741AM-1	Manual Valve, KM Series Increases Converter Charge Pressure (Sonnax)	1	41750-03

PART #	HARDPARTS (Continued)	QTY	REFERENCE #
42750B	Bell Housing, KM171 (14 Bolt) 4 Dowels To Case (.870"ID Speed-O Hole) 1983-88	1	
42750BA	Bell Housing, KM171 (14 Bolt) 4 Dowels To Case (1.100"ID Speed-O Hole) 1983-88	1	
42750C	Bell Housing, KM175/KM172-5/KM175-5 (14 Bolt) 4 Dowels To Case (1.100"ID Speed-O Hole) Cast # KM175-5 1985-Up (Uses Aluminum Spacer)	1	
42750D	Bell Housing, KM172 (13 Bolt) 4 Dowels To Case (.870"ID Speed-O Hole) 1983-88	1	
42750DA	Bell Housing, KM172 (14 Bolt) 4 Dowels To Case (.870"ID Speed-O Hole) 1983-88	1	
42750DB	Bell Housing, KM172 (14 Bolt) 4 Dowels To Case (1.100"ID Speed-O Hole) 1983-88	1	
42750E	Bell Housing, KM175-5 (14 Bolt) 4 Dowels To Case (.870"ID Speed-O Hole) Cast # F4A22 (Double Starter Location) 1989-Up	1	
42750EA	Bell Housing, KM175-5 (14 Bolt) 4 Dowels To Case (1.100"ID Speed-O Hole) Cast # F4A22 (Double Starter Location) 1989-Up	1	
42750G	Bell Housing, KM177-8 (14 Bolt) 4 Dowels To Case (1.100"ID Speed-O Hole) Cast # 177 (Uses An Aluminum Spacer Under Pump)	1	
42750H	Bell Housing, KM171-5 (14 Bolt) 4 Dowels To Case (1.100"ID Speed-O Hole) Cast # KM170-1 1989-Up	1	
42750HA	Bell Housing, KM171-5 (14 Bolt) 4 Dowels To Case (1.100"ID Speed-O Hole) Cast #F4A21 (Double Starter Location) 1989-Up	1	
42750J	Bell Housing, KM176-5 (14 Bolt) 4 Dowels To Case (1.100"ID Speed-O Hole) Cast # KM171 1989-Up	1	
42757M	Idler Cover, F4A33/W4A33 (6 Bolt) Tin 1990-Up	1	
42758L	Differential Cover, F4A33 (A4AF-1) 13 Bolt (Tin) 1991-Up	1	
42758LB	Differential Cover, A4AF3/A4BF1/A4BF2 (13 Bolt)(Aluminum)	1	
42758M	Differential Cover, F4A33/W4A33 (12 Bolt) Tin 1990-Up	1	
42758MA	Differential Cover, F4A33 (12 Bolt) Aluminum 1990-Up	1	
42760B	Case, KM171 (14 Bolt) 4 Dowels To Bell (Cast # 171) Non Vented (12 Pan Bolts, But Case Has 13 Holes) 1983-88	1	
42760BA	Case, KM171 (14 Bolt) 4 Dowels To Bell (Cast # 171) Vented Case (12 Pan Bolts, But The Case Has 13 Holes) 1983-88	1	
42760C	Case, KM175 (14 Bolts) 4 Dowels To Bell (Cast # 175) Non Vented Case (12 Pan Bolts, But The Case Has 13 Holes) 1985-89	1	
42760CA	Case, KM175 (14 Bolt) 4 Dowels To Bell (Cast # 175) Vented Case (12 Pan Bolts, But The Case Has 13 Holes) 1985-89	1	
42760D	Case, KM172 (13 Bolt) 4 Dowels To Bell (Cast # 175) Non Vented Case (12 Pan Bolts, But The Case Has 13 Holes) 1983-88	1	
42760DA	Case, KM172 (13 Bolt) 4 Dowels To Bell (Cast # 175) Vented Case (12 Pan Bolts, But The Case Has 13 Holes) 1983-88	1	
42760DB	Case, KM172 (14 Bolt) 4 Dowels To Bell (Cast # 175) Non Vented Case (12 Pan Bolts, But The Case Has 13 Holes) 1983-88	1	
42760DC	Case, KM172 (14 Bolt) 4 Dowels To Bell (Cast # 175) Vented Case (12 Pan Bolts, But The Case Has 13 Holes) 1983-88	1	
42760E	Case, KM175-5 (14 Bolt) 4 Dowels To Bell (Cast # S-KM175) 12 Pan Bolts, But The Case Has 13 Holes 1988-Up	1	
42760EA	Case, KM175-5 (14 Bolt) 4 Dowels To Case (Cast # F4A22) 12 Pan Bolts, But The Case Has 13 Holes (Double Starter) 1988-Up	1	
42760G	Case, KM177-8 (14 Bolt) 4 Dowels To Bell (Cast # 177) 13 Pan Bolts 1989-Up	1	
42760GA	Case, KM177-8 (14 Bolt) 4 Dowels To Bell (Cast # F4A23) 13 Pan Bolts 1989-Up	1	
42760H	Case, KM171-5 (14 Bolt) 4 Dowels To Bell (Cast # S-KM171) 12 Pan Bolts, But The Case Has 13 Holes 1989-Up	1	
42760HA	Case, KM171-5 (14 Bolt) 4 Dowels To Case (Cast # F3A21-S) 12 Pan Bolts, But The Case Has 13 Holes 1989-Up	1	
42760J	Case, KM176-5 (14 Bolt) 4 Dowels To Bell (Cast # KM176) 12 Pan Bolts 1989-Up	1	
42760L	Case, A4AF1 (4 3/8" Top Bolts) 2WD (Cast # A4AF1) 1991-Up	1	
42760LA	Case, A4AF (5 1/8" Top Bolts) 2WD (Cast # A4AF2) 1991-Up	1	
42760LB	Case, A4AF3 (5 1/8" Top Bolts) 2WD (Cast # A4AF3) 2000-Up (Uses A 6 Solenoid Valve Body) (13 3/4" Long Bell To Rear)	1	
42760LC	Case, A4BF1 (5 1/8" Top Bolts) 2WD (Cast # A4BF) 1991-Up (Uses A 4 Solenoid Valve Body) (14 1/8" Long Bell To Rear)	1	
42760LD	Case, A4BF2 (5 1/8" Top Bolts) 2WD (Cast # A4BF) 2000-Up (Uses A 6 Solenoid Valve Body) (14 1/8" Long Bell To Rear)	1	
42760M	Case, F4A33 (4 3/8" Top Bolts) 2WD (Cast # F4A33EN) 1990-Up	1	
42760MA	Case, F4A33 (3 9/16" Top Bolts) 2WD (Cast # F4A33EVS) 1990-Up (Detent For The Rooster Comb Bolts Into The Case)	1	

© Whatever It Takes Transmission Parts. Inc.

PART #	HARD PARTS (Continued)	QTY.	REFERENCE #
42760MAA	Case, F4A33 (3 9/16” Top bolts) 2WD (Cast # F4A33EV) 1990-Up (Detent For The Rooster Comb Is Made In The Case)	1	
42760MB	Case, W4A33 (4 3/8” Top Bolts) AWD (Cast # F4A33) 1990-Up (Detent For Rooster Comb Is Made In The Case)	1	
42760MBA	Case, W4A33 (4 3/8” Top Bolts) 2WD (Cast # F4A33ENS) 1990-Up (Detent For The Rooster Comb Bolts Into The Case)	1	
42760MC	Case, W4A33 (4 1/8” Top Bolts) AWD (Cast # W4A33) 1990-Up	1	
42760N	Case, W4A32 (4 3/8” Top Bolts) AWD (Cast # W4A32) 1991-Up (Double Starter Location)	1	
42760NA	Case, W4A32 (4 3/8” Top Bolts) AWD (Cast # W4A32) Single Starter Location	1	
42760Y	Case, KM172-5 (14 Bolt) 4 Dowels To Bell (Cast # F3A22) 12 Pan Bolts 1989-Up	1	
42762C	Housing, KM175 Overdrive (Cover) 3 Bolt 1985-89	1	
42762E	Housing, KM175-5 Overdrive (Cover) 4 Bolt (Cast # S-KM175) 1988-Up	1	
42762EA	Housing, KM175-5 Overdrive (Cover) 4 Bolt (Cast # F4A22) 1989-Up (With Speed Sensor)	1	
42762G	Housing, KM177-8 Overdrive (Cover) 4 Bolt (Cast # KM177) 1989-UP	1	
42762GA	Housing, KM177 Overdrive (Cover) 4 Bolt (Cast # F4A23) With Speed Sensor Hole	1	
42762L	Housing, A4AF1/A4AF2 Overdrive (Cover) 4 Bolt (Round)(With Speed Sensor Hole) 1991-99	1	
42762LC	Housing, A4AF3 Overdrive (Cover)(12 Bolt)(With Speed Sensor Hole) 2000-Up	1	
42762M	Housing, F4A33/W4A32/W4A33 Overdrive (4 Bolt) Cast # W4A32 (Uses 1.220”OD Bearing #223)	1	
42762MA	Housing, F4A33/W4A32/W4A33 Overdrive (4 Bolt) Cast # W4A32 (Uses 1.180”OD Bearing #223)	1	
42764C	Plate, KM175 Pump Spacer To Case (16 Hole) Aluminum 1985-89	1	
42764D	Plate, KM172 Pump Spacer To Case (15 Hole) Aluminum 1983-89	1	
42764E	Plate, KM175-5 Pump Spacer To Case (Aluminum) 1988-Up	1	
42764G	Plate, KM177-8 Pump Spacer To Case (Aluminum) 1989-Up	1	
42765B	Pan, KM171/KM172/KM175 Bottom (12 Bolt) No Drain Plug 1983-89	1	
42765E	Pan, KM171-5/KM175-5/KM176-5 Bottom (12 Bolt) With Drain Plug	1	
42765G	Pan, KM177-8 Bottom (13 Bolt) With Side Drain Plug	1	
42765GA	Pan, KM177-8 Bottom (13 Bolt) With Bottom Drain Plug	1	
42765L	Pan, A4BF1/A4BF2 Bottom (13 Bolt) With Drain Plug Facing Rear Cover 1991-Up	1	
42765LB	Pan, A4AF3 Bottom (13 Bolt) With Drain Plug Facing Servo Side Of Case	1	
42765M	Pan, F4A33/W4A32/W4A33 Bottom (14 Bolt) With Drain Plug 1990-Up	1	
42765Y	Pan, KM172-5 Bottom (12 Bolt) With Drain Plug 1989-Up	1	
42771LB	Spacer Plate, A4AF3 Case To Overdrive Cover (Aluminum)(12 Bolt)(1.030”Thick)	1	
42774B	Driven Speed-O Gear, KM171 With Housing (17 Teeth) 1983-89	1	
42774C	Driven Speed-O Housing, KM175/KM171-5/KM172-5/KM175-5/KM176-5/KM177-8 With Housing (31 Teeth) 1985-UP	1	
42774D	Driven Speed-O Gear, KM172 With Housing (16 Teeth) 1983-88	1	
42774L	Driven Speed-O Gear, A4AF1/A4AF3 With Housing (32 Teeth) 1991-Up	1	
42774LA	Driven Speed-O Gear, A4BF1/A4BF2 With Housing (31 Teeth)	1	
42774M	Driven Speed-O Gear, F4A33/W4A33 With Housing (29 Teeth) 1990-Up	1	
42774N	Driven Speed-O Gear, W4A32 With Housing (28 Teeth) 1991-Up	1	
42775A	Bolt, KM Series Converter (10mm X 1.5” Thread)	AR	
42775E	Bolt, KM Series Converter (10mm X 1.25” Thread)	AR	
42781EK	Bolt Set, KM175-5/KM176-5/KM177-8 Overdrive Plate To Case (4 Pieces)	1	
42781LK	Bolt Set, A4BF1/A4BF2 For Overdrive Adapter # 692 (T40 Torx Head)(.670”Long)(5 Pieces)	1	
42781LBK	Bolt Set, A4AF3 For Double Ball Bearing Flange #692 (T40 Torx Head)(1.107” Long)(4 Pieces)	1	
42795LB	Nut, A4AF3 Holds Transfer Drive Gear To Annulus Hub # 604 (1.438”ID)	1	
42796L	Nut, A4AF1/A4AF3/A4BF1/A4BF2 Holds Transfer Driven Gear To The Pinion Shaft (.888”ID)	1	
42857B	Wave Ring, KM171/KM172/KM175 Low/Reverse (5 3/16”OD) 1983-89	1	MD-0707399
42857G	Wave Ring, KM171-5/KM172-5/KM175-5/KM176-5/KM177-8/A4AF1/A4AF3/A4BF1/A4BF2/W4A32 Low/Reverse (5 7/16”OD) 1988-Up	1	MD-719830
42857M	Wave Ring, F4A33/W4A33 Low/Reverse 1990-Up	1	
42858M	Wave Plate, F4A33 Forward Clutch (Bottom) 7 Tab	1	
42858MA	Wave Ring, W4A33 Forward Clutch (Bottom) No Tab	1	
42861C	Snap Ring, KM Overdrive Pressure Plate (.040”) 1985-Up	1	MD-756033
42861CA	Snap Ring, KM Overdrive Pressure Plate (.050”) 1985-Up	1	MD756034
42861CB	Snap Ring, KM Overdrive Pressure Plate (.060”) 1985-Up	1	MD-756035
42861CC	Snap Ring, KM Overdrive Pressure Plate (.070”) 1985-Up	1	MD-756036
42861CD	Snap Ring, KM Overdrive Pressure Plate (.080”) 1985-Up	1	MD-756037
42862C	Snap Ring, KM175/KM175-5/KM176-5/KM177-8/A4AF1/A4BF1/A4BF2/W4A32 Holds Retainer To Overdrive Drum 1985-Up	1	
42862LB	Snap Ring, A4AF3 Holds Retainer To Overdrive Drum	1	
42862M	Snap Ring, F4A33/W4A33 Holds Retainer To Overdrive Drum 1990-Up	1	
42863C	Wire Ring, KM175/KM175-5/KM176-5/KM177-8/A4AF1/A4BF2/W4A32 Between Snap Ring & Overdrive Retainer 1985-Up	1	
42863M	Wire Ring, F4A33/W4A33 Between Snap Ring & Overdrive Retainer 1990-Up	1	
42869B	Snap Ring, KM171/KM172/KM175/KM171-5/KM176-5 Servo Cover To Piston	1	

© Whatever It Takes Transmission Parts. Inc.

42869E	Snap Ring, KM175-5/KM177-8 Servo Cover To Piston	1	
42869M	Snap Ring, F4A33/W4A33 Servo Cover To Piston 1990-Up	1	
42869N	Snap Ring, W4A32 Servo Cover To Piston 1991-Up	1	
42877B	Snap Ring, KM171/KM172/KM175/KM171-5/KM172-5/KM175-5/KM176-5/KM177-8/ A4AF1/A4BF1/W4A32 Forward Drum Spring Retainer	1	
42877L	Snap Ring, A4AF3 Forward Drum Spring Retainer (.060" Thick)	1	
42877M	Snap Ring, F4A33/W4A33 Forward Drum Spring Retainer 1990-Up	1	
42878B	Snap Ring, All KM Except F4A33/W4A33 Forward & Direct Drum (.063")	2	MD-955630
42878BA	Snap Ring, All KM Except F4A33/W4A33 Forward & Direct Drum (.071")	2	MD-955631
42878BB	Snap Ring, All KM Except F4A33/W4A33 Forward & Direct Drum (.079")	2	MD-955632
42878BC	Snap Ring, All KM Except F4A33/W4A33 Forward & Direct Drum (.087")	2	MD-955633
42878BD	Snap Ring, All KM Except F4A33/W4A33 Forward & Direct Drum (.094")	2	MD-955634
42878BE	Snap Ring, All KM Except F4A33/W4A33 Forward & Direct Drum (.102")	2	MD-955635
42878BG	Snap Ring, All KM Except F4A33/W4A33 Forward & Direct Drum (.110")	2	MD-955636
42878BH	Snap Ring, All KM Except F4A33/W4A33 Forward & Direct Drum (.118")	2	MD-955637
42879B	Snap Ring, KM171 Direct Drum Retainer	1	
42879C	Snap Ring, KM172/KM175 Direct Drum Retainer	1	
42879E	Snap Ring, KM175-5/KM177-8/A4BF1/A4BF2/W4A32 Direct Drum Retainer (.155"Thick, ID To OD)	1	
42879H	Snap Ring, KM171-5/KM176-5/A4AF1 Direct Drum Retainer	1	
42879L	Snap Ring, A4AF3 Direct Drum Retainer (.120" Thick, ID To OD)	1	
42879M	Snap Ring, F4A33/W4A33 Direct Drum Retainer	1	
42881B	Snap Ring, KM171 Holds Race To Input Shaft (7/16"ID) 1983-88	1	
42881C	Snap Ring, KM172/KM175/KM171-5/KM172-5/KM175-5/KM176-5/KM177-8/A4AF1/A4AF3/ A4BF1/A4BF2/F4A33/W4A32/W4A33 Holds Race To Input Shaft (3/4"ID) 1983-Up	1	
42885B	Snap Ring, KM171/KM172/KM175 Holds Low/Reverse Top Pressure Plate In (.071") 1983-89	1	MD-707413
42885BA	Snap Ring, KM171/KM172/KM175 Holds Low/Reverse Top Pressure Plate In (.079") 1983-89	1	MD-707406
42885BB	Snap Ring, KM171/KM172/KM175 Holds Low/Reverse Top Pressure Plate In (.087") 1983-89	1	MD-707407
42885BC	Snap Ring, KM171/KM172/KM175 Holds Low/Reverse Top Pressure Plate In (.094") 1983-89	1	MD-707408
42885BD	Snap Ring, KM171/KM172/KM175 Holds Low/Reverse Top Pressure Plate In (.102") 1983-89	1	MD-707409
42885BE	Snap Ring, KM171/KM172/KM175 Holds Low/Reverse Top Pressure Plate In (.110") 1983-89	1	MD-707410
42885BG	Snap Ring, KM171/KM172/KM175 Holds Low/Reverse Top Pressure Plate In (.118") 1983-89	1	MD-707411
42885BH	Snap Ring, KM171/KM172/KM175 Holds Low/Reverse Top Pressure Plate In (.126") 1983-89	1	MD-707412
42885E	Snap Ring, All KM Except KM171/KM172/KM175 Low/Reverse Pressure Plate (.071") 1988-Up	1	
42885EA	Snap Ring, All KM Except KM171/KM172/KM175 Low/Reverse Pressure Plate (.079") 1988-Up	1	
42885EB	Snap Ring, All KM Except KM171/KM172/KM175 Low/Reverse Pressure Plate (.087") 1988-Up	1	
42885EC	Snap Ring, All KM Except KM171/KM172/KM175 Low/Reverse Pressure Plate (.094") 1988-Up	1	
42885ED	Snap Ring, All KM Except KM171/KM172/KM175 Low/Reverse Pressure Plate (.102") 1988-Up	1	
42885EE	Snap Ring, All KM Except KM171/KM172/KM175 Low/Reverse Pressure Plate (.110") 1988-Up	1	
42885EG	Snap Ring, All KM Except KM171/KM172/KM175 Low/Reverse Pressure Plate (.118") 1988-Up	1	
42885EH	Snap Ring, All KM Except KM171/KM172/KM175 Low/Reverse Pressure Plate (.126") 1988-Up	1	
42885M	Snap Ring, F4A33/W4A33 Holds Low/Reverse Top Pressure Plate In (.115") 1990-Up	1	
42889B	Snap Ring, All KM With Ring Gear To Hub (.037") 1983-Up	1	
42889M	Snap Ring, F4A33/W4A33 Holds Ring Gear To Hub (.060") 1990-Up	1	
42893B	Snap Ring, KM171/KM172/KM175 Holds Return Spring To Center Support	1	
42893E	Snap Ring, KM171-5/KM172-5/KM175-5/KM176-5/KM177-8 Holds Return Spring In Center Support	1	
42894B	Snap Ring, KM171/KM171-5 Bearing To Case (2.710"ID) .060"	1	
42894C	Snap Ring, KM171/KM171-5 Bearing To Case (2.710"ID) .035"	1	
42894E	Snap Ring, KM172-5/KM175-5/KM176-5/KM177-8 Bearing To Case (3" ID)	1	
42894LC	Snap Ring, A4AF1/A4AF2 Bearing To Case (.040" Thick)(3.884"OD)	1	
42894M	Snap Ring, F4A33/W4A32/W4A33 Bearing To Case (3.650"ID) 1990-Up	1	
42895B	Snap Ring, KM171/KM171-5 Bearing To Shaft (1.090"ID)	1	
42895C	Snap Ring, KM172/KM175 Bearing To Shaft (1.300"ID)	1	
42895E	Snap Ring, KM172-5/KM175-5/KM176-5/KM177-8/A4AF1/A4BF1/A4BF2/W4A32/W4A33 Bearing To Shaft (1.500"ID) 1990-Up	1	
42896B	Snap Ring, KM171/KM172/KM175/KM172-5/KM176-5 Servo Cover (Top)	1	
42896E	Snap Ring, KM175-5/KM177-8 Servo Cover (Top)	1	
42896M	Snap Ring, F4A33/W4A33 Servo Cover (Top)	1	
42896N	Snap Ring, W4A32 Servo Cover (Top) Use 42869N	1	
42897B	Snap Ring, KM171/KM172/KM171-5/KM172-5 Holds Governor To Transfer Shaft	1	
42898L	Snap Ring, A4AF3/A4BF1/A4BF2 Pinion Bearing To Case (.099"Thick)(2 Eyelets)	1	
42899B	Snap Ring, KM171/KM172/KM175/KM171-5/KM172-5 Holds Gear To Shaft	1	
42905B	Servo Assembly, KM171 (2.075"OD & 3.056"OD) Aluminum Cover 1983-88	1	
42905C	Servo Assembly, KM175 (1.770"OD & 3.056"OD) Tin Cover 1985-89	1	
42905D	Servo Assembly, KM172/KM172-5 (1.955"OD & 3.056"OD) Aluminum Cover 1983-Up	1	
42905E	Servo Assembly, KM175-5/KM177-8 (1.872"OD & 3.252"OD) 1988-Up (Plastic Cover With 1 Wire Made To Cover) With Triangle Connection (With Adjustable Pin)	1	
42905EA	Servo Assembly, KM175-5/KM177-8 (1.872"OD & 3.252"OD) 1988-Up (Plastic Cover With 1 Wire Made To Cover) With Round Connector (With Adjustable Pin)	1	

© Whatever It Takes Transmission Parts. Inc.

PART #	HARD PARTS (Continued)	QTY.	REFERENCE #
42905EB	Servo Assembly, KM175-5/KM177-8 (1.872”OD & 3.252”OD) 1988-Up (Plastic Cover With Connector On Cover) No Wires (With Adjustable Pin)	1	
42905H	ServoAssembly, KM171-5 (1.955”OD & 3.056”OD) Aluminum Cover 1989-Up	1	
42905J	Servo Assembly, KM176-5 (1.770”OD & 3.056”OD) 1989-Up (Plastic Cover With 1 Prong Connector On Cover) No Wires (With Adjustable Pin)	1	
42905JA	Servo Assembly, KM176-5 (1.770”OD & 3.056”OD) 1989-Up (Plastic Cover With 1 Wire Made To Cover) With Triangle Connector (With Adjustable Pin)	1	
42905L	Servo Assembly, A4AF1/A4AF3 (1.770”OD & 3.056”OD) Plastic Cover With 1 Wire Made To Cover (With 1 Prong Connector) Non Adjustable Pin	1	
42905LB	Servo Assembly, A4BF1/A4BF2 (1.872”OD & 3.252”OD) Plastic Cover With 1 Wire Made To Cover (With 1 Prong Connector) Non Adjustable Pin	1	
42905M	Servo Assembly, F4A33/W4A33 (2.225”OD & 3.925”OD) Plastic Cover 1990-Up	1	
42905N	Servo Assembly, W4A32 (2.041”OD & 3.575”OD) Plastic Cover 1991-Up	1	
42960C	Piston, KM175 Overdrive Clutch 1985-89	1	
42960E	Piston, KM175-5/KM176-5 Overdrive Clutch 1988-Up	1	
42960G	Piston, KM177-8/A4BF1/A4BF2 Overdrive Clutch (Steel) 1988-Up	1	
42960LB	Piston, A4AF3 Overdrive Clutch (Aluminum)	1	
42960M	Piston, F4A33/W4A32/W4A33 Overdrive 1990-Up	1	
42967B	Piston, KM171 Low/Reverse Clutch 1983-88	1	
42967C	Piston, KM172/KM175 Low/Reverse Clutch 1983-89	1	
42967E	Piston, KM172-5/KM175-5/KM177-8/A4BF1/A4BF2/W4A32 Low/Reverse Clutch 1988-Up	1	
42967H	Piston, KM171-5/KM176-5/A4AF1/A4AF3/F4A32 Low/Reverse Clutch 1989-Up	1	
42967M	Piston, F4A33/W4A33 Low/Reverse Clutch 1990-Up	1	
42970C	Spring, KM175 Overdrive Clutch Return 1985-89	1	
42970E	Spring, KM175-5/KM176-5 Overdrive Clutch Return 1988-Up	1	
42970G	Spring, KM177-8/A4BF1/A4BF2 Overdrive Clutch Return 1989-Up	1	
42970LB	Springs W/Retainer, A4AF3 Overdrive Clutch Return (16 Springs)	1	
42970M	Spring, F4A33/W4A32/W4A33 Overdrive Clutch Return 1990-Up	1	
42974B	Return Spring, KM171/KM172 Forward Clutch 1983-88	1	
42974C	Return Spring, KM175 Forward Clutch 1985-89	1	
42974E	Return Spring, KM175-5/KM176-5/KM177-8/A4AF1/A4BF1/W4A32 Forward Clutch 1988-Up	1	
42974H	Return Spring, KM171-5/KM172-5 Forward Clutch 1989-Up	1	
42974L	Return Spring, A4AF3 Forward Clutch (19 Coil Springs)	1	
42974M	Return Spring, F4A33/W4A33 Forward Clutch 1990-Up	1	
42975B	Return Spring, KM171/KM172/KM175 Direct Clutch (1 Coil Spring) 1983-89	1	
42975E	Return Spring Set, KM171-5/KM172-5/KM175-5/KM176-5/KM177-8/A4AF1/A4BF1/A4BF2W4A32 Direct Clutch (23 Coil Springs)(2.448”ID) 1988-Up	1	
42975L	Return Spring Set, A4AF3 Direct Clutch (23 Coil Springs)(2.535”ID)	1	
42975M	Return Spring Set, F4A33/W4A33 Direct Clutch (23 Coil Springs) 1992-Up	1	
42977M	Cushion, F4A33/W4A33 Low/Reverse Clutch (6 3/8”OD)	1	
42991E	Linkage Assembly, KM175-5/KM176-5 Internal (.130” Thick Rooster Comb)	1	
42991EA	Linkage Assembly, KM175-5/KM176-5 Internal (.175” Thick Rooster Comb)	1	
42991G	Linkage Assembly, KM177-8 Internal 1989-Up	1	
42991L	Linkage Assembly, A4AF1/A4AF3/A4BF1/A4BF2 Internal	1	
42994B	Park Actuator Rod, KM170/KM171/KM172/KM175/KM177/KM171-5/KM172-5/KM175-5/KM176-5/KM177-8 (5 7/8” Long)	1	
42994L	Park Actuator Rod, A4AF1/A4AF3/A4BF1/A4BF2 (6 1/4” Long)	1	
42994M	Park Actuator Rod, F4A33/W4A32/W4A33 (With 2 Rollers) 1990-Up	1	

© Whatever It Takes Transmission Parts. Inc.

Shift Pointers

Subject:
Flare on 2-3 shift

Unit:
Hyundai KM series

Essential Reading:
- ☑ Rebuilder
- ☑ Diagnostician
- ☐ R & R (Installers)
- ☐ Shop Owner
- ☐ Center Manager

Author:
Pete Luban, ATSG
Transmission Digest
Contributing Editor



Temp-eramental Hyundai

I was handling a call on the ATSG Tech Line about a 2000 Hyundai Elantra that had a complaint of a flare on the 2-3 shift.

Ordinarily, a KM unit with a 2-3 flare could have a problem with servo-release pressure, usually caused by the computer not shutting off the pressure-control solenoid quickly enough. There could be a problem with the servo switch if it were stuck. In other words, these are the usual components that could cause a 2-3 flare on a KM unit.

In this situation it was none of the usual items. It was, believe it or not, the transmission-fluid-temperature sensor. As I looked further into this, sure enough, I found factory bulletin 00-40-010 dated August 2000.

It seems that this vehicle had stored a P0712 for a shorted ATF-temp sensor, which causes the TCM to create a flared 2-3 shift in this vehicle model. Computer strategy seems to be the culprit here.

As I read the bulletin, I found other unusual computer strategies in play on various Hyundai model years, all related to the ATF-temp sensor and in what manner it failed.

If the ATF-temp sensor fails open and stores code P0713, the complaint would be a harsh garage shift from park to either drive or reverse and no converter-clutch application.

If the vehicle were a 1996-2000 Elantra or Tiburon, or a 1995-2001 Accent, the complaint would be no 4th gear.

If this were a 1999-2001 Sonata, the complaint would be no upshift past 2nd gear.

Should the ATF-temp sensor become shorted and a P0712 be stored, the 2-3 flared-shift complaint would affect 1996-2000 Elantra and Tiburon as well as 1995-2001 Accent.

In the event this happens to you, the part number of the ATF-temp sensor for the 1996-2000 Elantra and Tiburon and for the 1995-2001 Accent is 46386-22600.

The part number for the 1999-2001 Sonata is 46386-39050. TD

©2006 Transmission Digest

© Whatever It Takes Transmission Parts. Inc.

MITSUBISHI

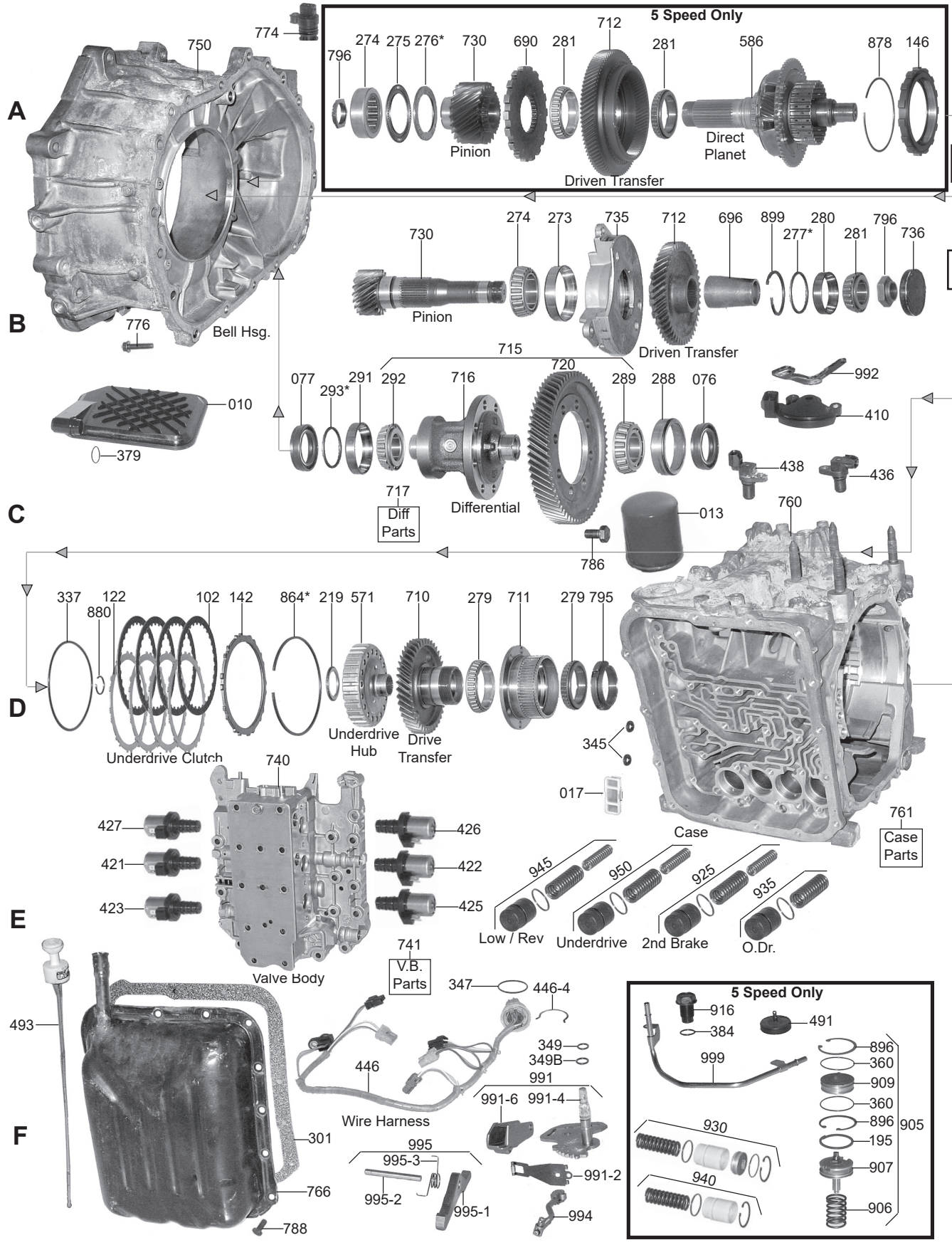
A
B
C
D
E
F
774
750
796
274
275
276*
730
690
281
712
281
586
878
146
5 Speed Only
Pinion
Direct Planet
Driven Transfer
002 OHK Kit
004 Master L/Steels Kit
730
274
273
735
712
696
899
277*
280
281
796
736
Pinion
Driven Transfer
006 Master W/Steels Kit
030 Bushing Kit
175 Ring Kit
776
Bell Hsg.
715
720
077
293*
291
292
716
289
288
076
992
410
010
379
438
436
717 Diff Parts
Differential
013
786
760
400 Technical Manuals
337
880
122
102
142
864*
219
571
710
279
711
279
795
Underdrive Clutch
Underdrive Hub
Drive Transfer
345
017
761 Case Parts
Case
740
427
421
423
426
422
425
945
950
925
935
Low / Rev
Underdrive
2nd Brake
O.Dr.
741 V.B. Parts
Valve Body
347
446-4
493
446
349
349B
991
991-6
991-4
Wire Harness
301
766
788
995
995-3
995-2
995-1
991-2
994
5 Speed Only
916
384
491
999
896
360
909
360
896
195
907
906
905
930
940

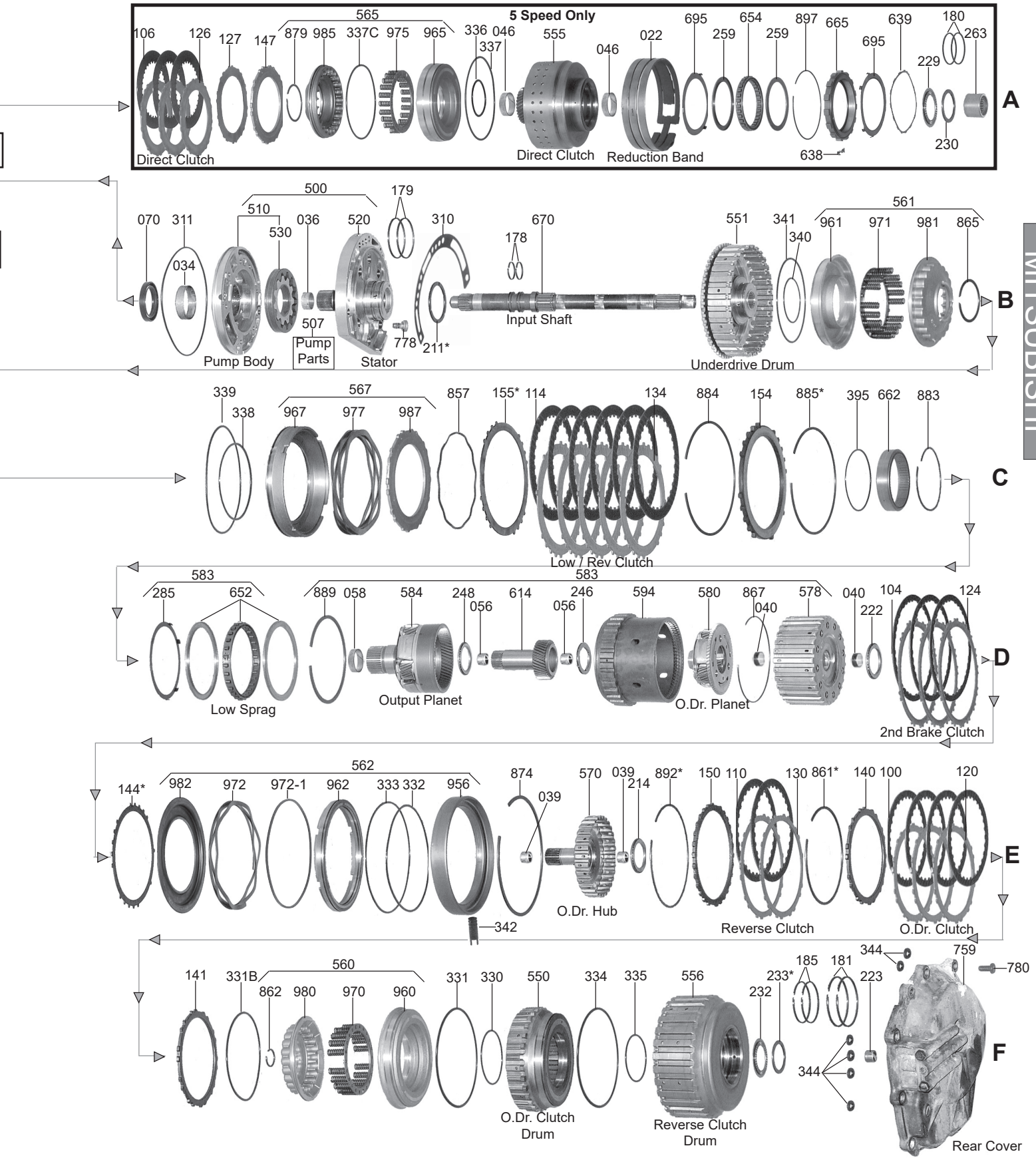

MITSUBISHI

1-800-940-0197

© Whatever It Takes Transmission Parts. Inc.

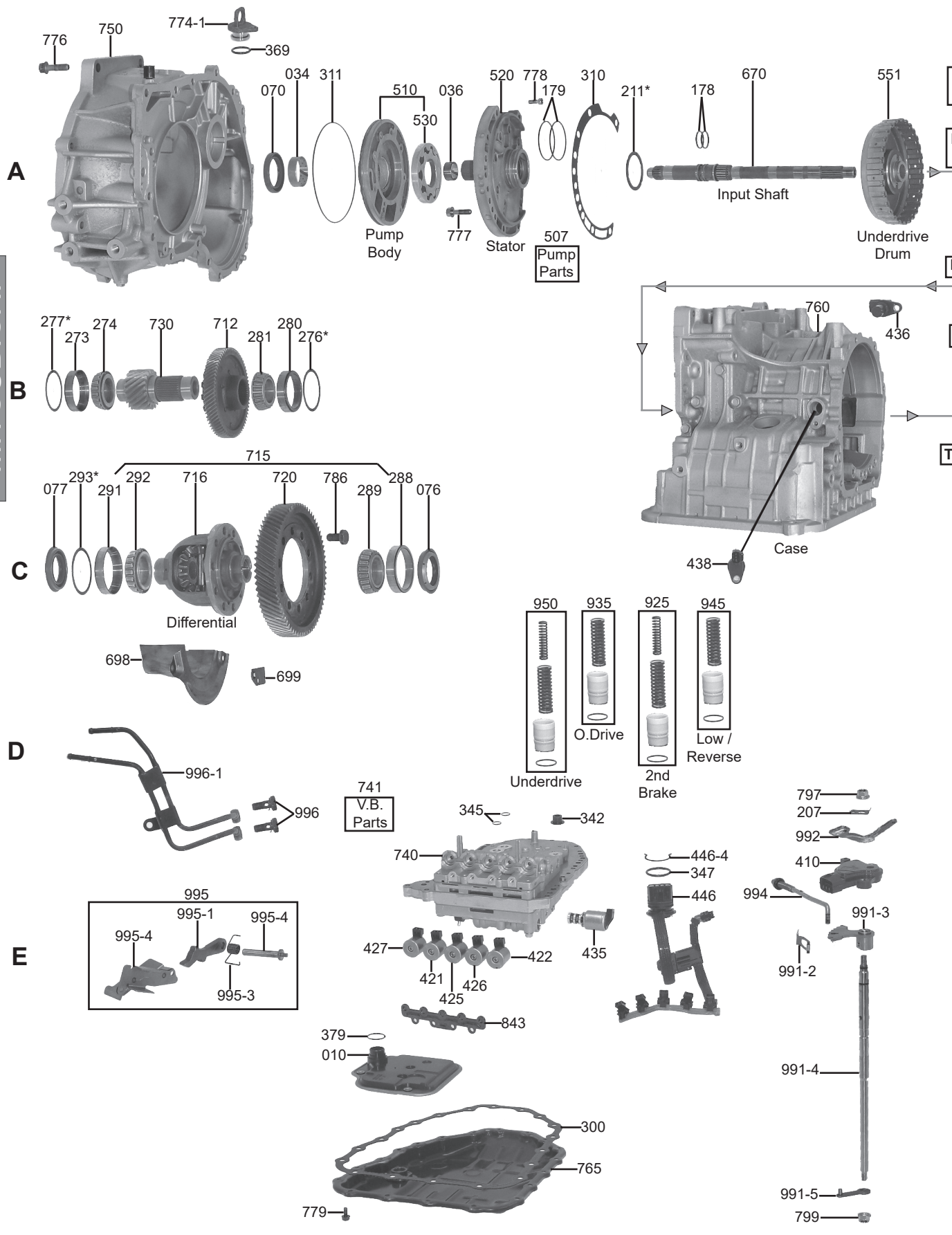

002 Overhaul Kit

004 Master L/Steels Kit

006 Master W/Steels Kit

030 Bushing Kit

119 Friction Module

139 Steel Module

175 Ring Kit

400 Technical Manual

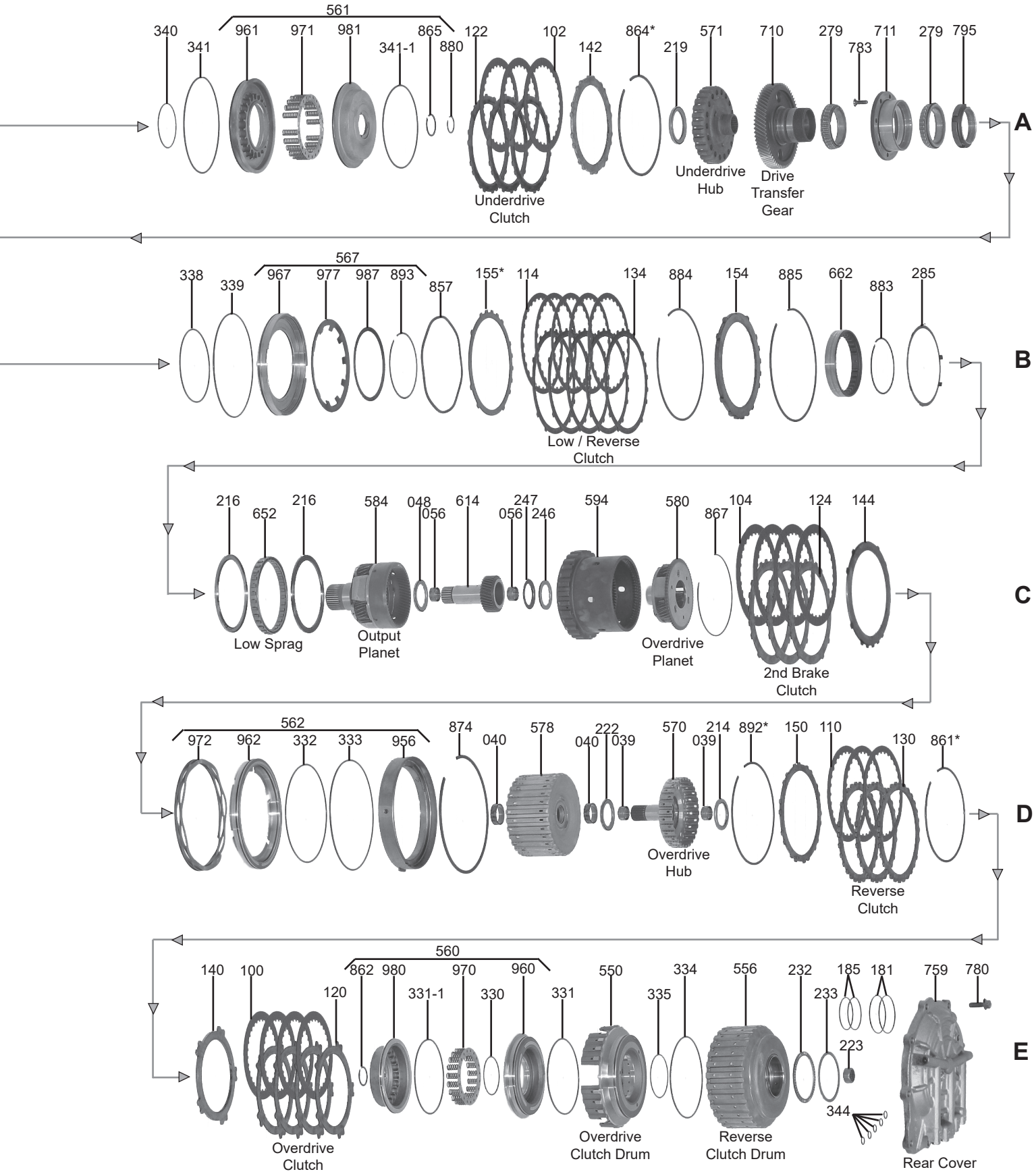

MITSUBISHI

© Whatever It Takes Transmission Parts. Inc.

PART #	OVERHAUL KITS	QTY	REFERENCE #
41002A	Overhaul Kit, F4A41/F4A42 1996-Up	1	
41002B	Overhaul Kit, F4A51/W4A51(W4A5A) 1996-Up (For AWD Sell 41077D Also)	1	
41002C	Overhaul Kit, F5A51 (5 Speed FWD) 2001-Up	1	
41002DF	Overhaul Kit, F5A42 1996-Up (With Duraprene)	1	
41002EF	Overhaul Kit, A4CF1/A4CF2 (Hyundai) 2006-Up	1	
41002FP	Overhaul Kit, A5CF1 2005-10 w/Pistons (Hyundai/Kia)	1	
41002G	Overhaul Kit, A5GF1 (Hyundai/Kia) 2005-Up	1	
41002H	Overhaul Kit, A5HF1 (Hyundai/Kia) 2005-Up	1	

PART #	MASTER L/STEELS KITS	QTY	REFERENCE #
41004A	Master L/Steels Kit, F4A41/F4A42 1996-Up	1	
41004AA	Master L/Steels Kit, F4A41 (Mirage 1.5L) 1997-02 (When Out Use 41004A)	1	
41004B	Master L/Steels Kit, F4A51/W4A51(W4A5A) 1996-Up (For AWD Sell 41077D Also)	1	
41004C	Master L/Steels Kit, F5A51 2001-Up (All Frictions Are Double Sided)	1	
41004EF	Master L/Steels Kit, A4CF1/A4CF2 (Hyundai) 2006-Up (w/Duraprene Pan Gasket)	1	
41004G	Master L/Steels Kit, A5GF1 (Hyundai/Kia) 2005-Up	1	
41004H	Master L/Steels Kit, A5HF1 (Hyundai/Kia) 2005-Up	1	

PART #	MASTER W/STEELS KITS	QTY	REFERENCE #
41006A	Master W/Steels Kit, F4A41/F4A42 1996-Up	1	
41006B	Master W/Steels Kit, F4A51/W4A51(W4A5A) 1996-Up (For AWD Sell 41077D Also)	1	
41006C	Master W/Steels Kit, F5A51 2001-Up (All Frictions Are Double Sided)	1	
41006EF	Master W/Steels Kit, A4CF1/A4CF2 (Hyundai) 2006-Up (w/Durapene Pan Gasket)	1	
41006G	Master W/Steels Kit, A5GF1 (Hyundai/Kia) 2005-Up	1	
41006H	Master W/Steels Kit, A5HF1 (Hyundai/Kia) 2005-Up	1	

PART #	FILTERS	QTY	REFERENCE #
41010A	Filter, F4A41/F4A42/W4A42 (All Plastic)(Rectangle W/1 Small Corner Cut Off) 1996-Up	1	47231-39010
41010B	Filter, F4A51/F5A51 (1/2 Metal 1/2 Plastic)(Rectangle) 1996-Up	1	F273
41010BA	Filter, F4A41/42/51/W4A51/F5A51/A5GF1/A5HF1 (1/2 Metal & 1/2 Plastic)(Rectangle W/1 Large Corner Cut Off On The Same Edge Of TheTube) 1996-Up	1	806090
41010C	Filter, F4A51/W4A51(W4A5A)/F5A51 (All Plastic)(Not Rectangle) 1997-Up	1	MR350441
41010E	Filter, F4A42/A4CF1/A4CF2/A5CF1/A5CF2 (1/2 Metal & 1/2 Plastic)(3 Bolt)(Cast #46321-23000) (Kia) 2006-Up	1	46321-23000
41013A	Filter, F4A41/F4A42/F4A51 (Spin-On) (Some Early) 1996-Up	1	46322-39000

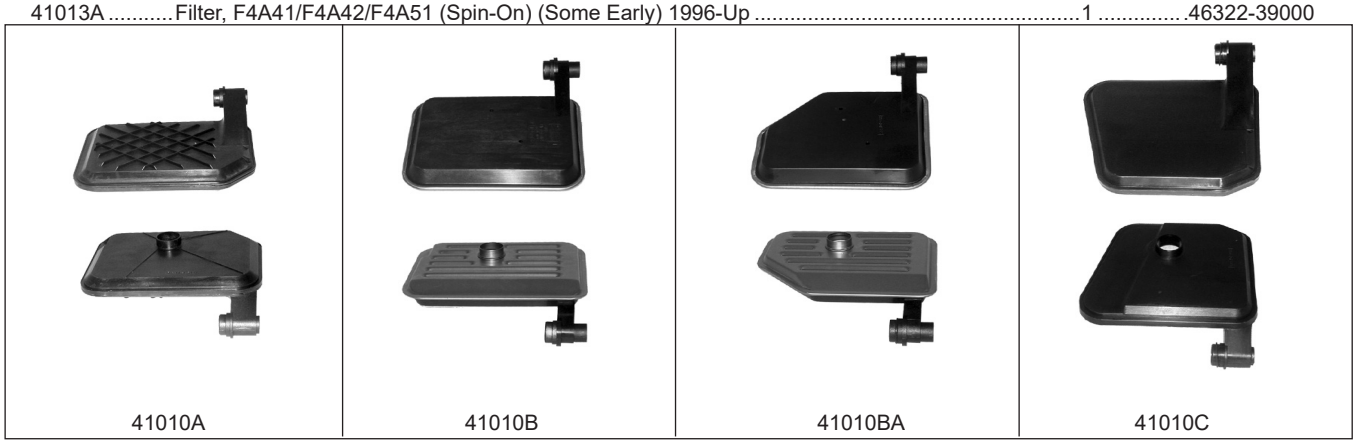

41010A | 41010B | 41010BA | 41010C

PART #	BANDS	QTY	REFERENCE #
41022C	Band, F5A51 Reduction Brake (1 1/2” Wide) 2001-Up (This Looks Like 84022 4T60E Forward Band, But Smaller)	1	MD762016
41022H	Band, A5HF1 Brake (Hyundai/Kia) 2005-Up	1	
183022A	Band, A5GF1 Reduction Brake (1.460” Wide) 2005-Up	1	

PART #	BUSHINGS	QTY	REFERENCE #
41030A	Bushing Kit, F4A41/F4A42 1996-Up (Contains: 2-42056C, 1 Each Of 41034A & Stator Bushing)	1	
41030B	Bushing Kit, F4A51/W4A51(W4A5A) 1996-Up (Contains: 2-Reverse Hub, 3-42056E, 1 Each 41034A & Stator)	1	

© Whatever It Takes Transmission Parts. Inc.

41030C	Bushing Kit, F5A51 2001-Up (9 Bushings)	1	
41030E	Bushing Kit, A4CF1/A4CF2 2006-Up (8 Bushings)	1	
41034A	Bushing, F4A41/F4A51/W4A42/W4A51(W4A5A)/F5A51 Pump Body (Smooth) 1996-Up	1	
41034E	Bushing, A4CF1/A4CF2/A5HF1 Pump Body (.545"Wide)(1.695"ID)(Babbit W/Oil Pockets) 2006-Up	1	
41036A	Bushing, F4A41/F4A42/F4A51/W4A42/W4A51(W4A5A)/F5A51 Stator (Front) 1996-Up	1	
41036E	Bushing, A4CF1/A4CF2/A5HF1 Stator (Front)(.445"Wide)(.888"ID)(Babbit) 2006-Up	1	
41039A	Bushing, F4A41/F4A42/W4A42 Overdrive Clutch Hub (.730"ID) 1996-Up (Also Fits A4CF1/A4CF2 2006-Up)	2	43794-39000
41039B	Bushing, F4A51/W4A51(W4A5A)/F5A51/A5HF1 Overdrive Clutch Hub (.810"ID) 1996-Up	1	
41040A	Bushing, F4A41/F4A42/W4A42 2nd Brake Clutch Hub (.895" ID) 1996-Up	1	
41040B	Bushing, F4A51/W4A51(W4A5A)/F5A51/A5HF1 2nd Brake Clutch Hub (1.075"ID) 96-Up	2	
41040E	Bushing, A4CF1/A4CF2 2nd Brake & Low/Reverse Clutch Hub (.296"Wide)(.985"ID) 2006-Up	2	
41046C	Bushing, F5A51/A5HF1 Direct Clutch Drum (Front & Rear)(1.540"ID)(1.460"ID) 2001-Up	1	
41056A	Use 42056C	1	
42056C	Bushing, F4A41/F4A42/W4A42 Output Sun Gear # 056 1996-Up (.732"ID)(Bronze)	1	
41056B	Use 42056E	1	
42056E	Bushing, F4A51/W4A51(W4A5A)/F5A51/A5HF1 Output Sun Gear # 056 (.808" ID) 1996-Up	2	
41056E	Bushing, A4CF1/A4CF2 Output Planet Sun Gear (.732"ID)(Babbit) 2006-Up (Can Use 42056C)	2	
41058A	Bushing, F4A41/F4A42/W4A42 Output Planet 1996-Up	1	
41058B	Bushing, F4A51/W4A51(W4A5A) Output Planet 1996-Up	1	

PART #	METAL CLAD SEALS	QTY	REFERENCE #
42070A	Seal, F4A41/F4A42/F4A51/W4A42/W4A51(W4A5A)/F5A51/A4CF1/A4CF2/A5HF1 (Front)	1	
41070E	Use 42070A	1	
41076A	Seal, F4A41/F4A42/F4A51/F5A51 Axle (2.410"OD)(Both Sides)(All Except Santa Fe & Elantra 7/00-06 & Sonata 6/01-06 & Tiburon10-01-06)(Also Fits W4A42 Case Side)	1-2	45245-39001
41076AB	Seal, F4A41/F4A42/F4A51/F5A51 Axle (Case Side)(2.415"OD)(Santa Fe & Elantra 7/00-06 & Sonata 6/01-06 & Tiburon 10/01-06)(Also Fits W4A51(W4A5A) Axle (Case Side) 2001-Up) (Also Fits A5GF1 Axle (Bell Housing Side) # 077 2005-Up)(Also Fits A4CF1/A4CF2 Axle # 076 2006-Up)	1	43119-39030
41076E	Use 41076AB	AR	
41077A	Seal, F4A41/F4A42/F4A51/F5A51 Axle (Bell Housing Side)(Use 41076A)	1	
41077AA	Seal, W4A42/W4A51(W4A5A) Axle (3.495"OD)(Bell Housing Side) 1996-Up	1	
41077AB	Seal, F4A41/42/51/F5A51/A4CF1/A4CF2/A5HF1 Axle (Bell Housing Side)(2.410"OD)(1.560"ID) (Santa Fe & Elantra 7/00-06 & Sonata 6/01-06 & Tiburon 10/01-06)	1-2	43119-39020
41077D	Seal, W4A51(W4A5A) Axle (2.880"OD)(Bell Housing Side) 2001-Up (Also Fits HSFTC (Hyundai Santa Fe 2.7L) Transfer Case Input Seal 2002-09)	1-2	
41077E	Use 41077AB	1	

PART #	FRICTIONS	QTY	REFERENCE #
41100A	Friction, F4A41/F4A42/W4A42 Overdrive Clutch (.067")(30 Teeth)(5.350"OD)(4.382"ID) 1996-Up (Hi-Energy Eclipse)(Also Fits F4A41/42/W4A42 Underdrive Clutch # 102)	3-8	565070
41100B	Friction, F4A51/W4A51(W4A5A)/F5A51 Overdrive Clutch (.067")(30 Teeth)(5.82"OD)(Hi-Energy Eclipse) 1996-Up (Also Fits F4A51/W4A51(W4A5A)/F5A51/A5HF1 Underdrive Clutch # 102)	4-8	565100
41100E	Friction, A4CF1/A4CF2 Overdrive Clutch (.069")(30 Teeth)(5.390"OD)(4.066"ID) 2006-Up	4	
41100H	Friction, A5HF1 Overdrive Drive Clutch .099" (30 Teeth)(Hi-Energy) 2006-09	4	
41102A	Friction, F4A41/F4A42/W4A42 Underdrive Clutch (.067")(30 Teeth)(5.35"OD) 1996-Up (Can Use 41100A)	AR	
41102B	Friction, F4A51/W4A51(W4A5A)/F5A51 Underdrive Clutch (.067")(30 Teeth)(5.82"OD) 1996-Up (Can Use 41100B)	4	45422-39501
41102E	Friction, A4CF1/A4CF2 Underdrive Clutch (.069")(30 Teeth)(5.706"OD) 2006-Up	3	
41102H	Friction, A5HF1 Overdrive (O.D Spline)(20/30 Teeth)(Hi-Energy)(.099"Thick) 2006-09	4	
41104A	Friction, F4A41/F4A42/W4A42 2nd Brake Clutch (.067")(30 Teeth)(6.18"OD) 1996-Up (Hi-Energy Eclipse)(1/2"Wide Lining ID To OD)(Also Fits A4CF1/A4CF2 2006-Up)	4	565040
41104B	Friction, F4A51/W4A51(W4A5A)/F5A51/A5HF1 2nd Brake Clutch (.067")(30 Teeth)(7.03"OD) 1996-Up (HI-Energy Eclipse)(1/2"Wide Lining ID To OD)	4	565105
41104HA	Friction, A5HF1 2nd Brake (30 Teeth)(.074"Thick)(Hi-Energy) 2006-09	4	
41106C	Friction, F5A51/A5HF1 Direct Clutch (.072") (30 Teeth)(4.802"OD)(Flat) 2001-Up (Hi-Energy Eclipse)	3	
41110A	Friction, F4A41/F4A42/W4A42 Reverse Clutch (.067")(30 Teeth)(5.870"OD) 1996-Up (Hi-Energy Eclipse) (Also Fits A4CF1/A4CF2 2006-Up)	2-3	565050
41110B	Friction, F4A51/W4A51(W4A5A)/F5A51/F5A51 Reverse Clutch (.067")(30 Teeth)(6.530"OD) (Hi-Energy Eclipse) 1996-Up	2	565110
41110E	Friction, A4CF1/A4CF2 Overdrive Clutch 2006-08	2	
41114A	Friction, F4A41/F4A42/W4A42 Low/Reverse Clutch (.067")(30 Teeth)(6.180"OD)(4.815"ID) 1996-Up (Hi-Energy Eclipse)	6	565030

© Whatever It Takes Transmission Parts. Inc.

PART #	FRICTIONS (Continued)	QTY	REFERENCE #
41114B	Friction, F4A51/W4A51(W4A5A)/F5A51/A5HF1 Low/Reverse Clutch (.067")(30 Teeth)(7.03"OD) 1996-Up (Hi-Energy Eclipse)(1/4"Wide Lining ID To OD)	6	.565115
41114E	Friction, A4CF1/A4CF2 Low/Reverse Clutch (.069")(30 Teeth)(6.180"OD)(5.260"ID) 2006-Up	6	
41119A	Friction Module, F4A41/F4A42 1997-Up	1	
41119B	Friction Module, F4A51/W4A51(W4A5A) 1996-Up	1	.RCP96-213
41119C	Friction Module, F5A51/V5A51/R5A51 1996-Up	1	
41119E	Friction Module, A4CF1/A4CF2 (Hyundai) 2006-Up	1	
41119G	Friction Module, A5GF1 (Hyundai/Kia) 2005-10/31/06	1	
41119H	Friction Module, A5HF1 (Hyundai/Kia) 11/01/06-Up	1	

PART #	STEELS	QTY	REFERENCE #
41120A	Steel, F4A41/F4A42/W4A42 Overdrive Clutch (.099")(20 Teeth)(4.660"ID) 1996-Up (Also Fits F4A41/F4A42/W4A42 Overdrive Clutch Apply Plate # 141)	1-4	
41120B	Steel, F4A51/W4A51(W4A5A) Overdrive Clutch (.098")(20 Teeth)(4.855"ID) 1996-Up	4	.124709
41120C	Steel, F5A51 Overdrive Clutch (.120") (20 Teeth)(4.855"ID) 2001-Up	4	.124709-300
41120E	Steel, A4CF1/A4CF2 Overdrive Clutch (.099")(5 Wide Teeth)(4.380"ID) 2006-Up	4	
41120H	Friction, A5HF1 Overdrive Clutch (.106")(6 Teeth)(4.850"ID)(One Sided) 2006-Up	3	
41122A	Steel, F4A41/F4A42 Underdrive Clutch (.071") (20 Teeth) 1996-Up	3-4	
41122B	Steel, F4A51/W4A51(W4A5A)/F5A51/A5HF1 Underdrive Clutch (.071")(20 Teeth) (4.850"ID) 1996-Up	4	
41122E	Steel, A4CF1/A4CF2 Underdrive Clutch (.080")(20 Teeth)(4.775"ID) 2006-Up	3	
41124A	Steel, F4A41/F4A42/W4A42 2nd Brake Clutch (Front) (.098")(17 Teeth)(Stepped) 1996-Up	2	
41124AA	Steel, F4A41/F4A42/W4A42 2nd Brake Clutch (.099") (17 Teeth) 1996-Up	2	
41124AB	Steel, F4A41/F4A42/W4A42 2nd Brake Clutch (.077")(17 Teeth) 1996-Up	2	
41124AC	Steel, F4A41/F4A42/W4A42 2nd Brake Clutch (.061")(17 Teeth) 1996-Up	2	
41124B	Steel, F4A51/W4A51(W4A5A)F5A51/A5HF1 2nd Brake Clutch (.098")(16 Teeth)(Stepped) (Front Only) 1996-Up	2	
41124BA	Steel, F4A51/W4A51(W4A5A)F5A51/A5HF1 2nd Brake Clutch (.077")(16 Teeth) 1996-Up	2	
41124BB	Steel, F4A51/W4A51(W4A5A)F5A51 2nd Brake Clutch (.086")(16 Teeth) 1996-Up	2	
41124BC	Steel, F4A51/W4A51(W4A5A)F5A51/A5HF1 2nd Brake Clutch (.099")(16 Teeth) 1996-Up	2	
41124BD	Steel, F4A51/W4A51(W4A5A)F5A51 2nd Brake Clutch (.118")(16 Teeth) 1996-Up	2	
41124E	Steel, A4CF1/A4CF2 2nd Brake Clutch (.070")(14 Teeth)(5.128"ID) 2006-Up	1	
41124EA	Steel, A4CF1/A4CF2 2nd Brake Clutch (.118")(14 Teeth)(5.128"ID) 2006-Up	2	
41124H	Friction, A5HF1 2nd Brake Clutch .091" (16 External Teeth)(One Sided Friction)(Hi-Energy) 2006-09	3	
41126C	Steel, F5A51 Direct Clutch (.098")(20 Teeth)(3.475"ID) 2001-Up	3	.MN156727
41126CA	Steel, F5A51 Direct Clutch (.160")(20 Teeth)(3.475" ID) 2001-Up	2	
41126CB	Steel, F5A51/A5HF1 Direct Clutch (.160")(20 Teeth)(3.590"ID) 2001-Up	2	
41127C	Steel, F5A51/A5HF1 Direct Clutch (.072")(20 Teeth)(3.590"ID)(Wavy) 2001-Up	1	
41130A	Steel, F4A41/F4A42/W4A42 Reverse Clutch (.071") (20 Teeth)(5.250" ID) 1996-Up	2	
41130B	Steel, F4A51/W4A51(W4A5A)F5A51/A5HF1 Reverse Clutch (.071")(20 Teeth)(6.040"ID) 1996-Up	2	
41130E	Steel, A4CF1/A4CF2 Reverse Clutch (.139")(28 Teeth)(5.091"ID) 2006-Up	1	
41130EA	Steel, A4CF1/A4CF2 Reverse Clutch (.119")(20 Teeth)(5.091"ID) 2006-Up	2	
41134A	Steel, F4A41/F4A42/W4A42 Low/Reverse Clutch (.039") (17 Teeth) 1996-Up	5	
41134B	Steel, F4A51/W4A51(W4A5A)F5A51/A5HF1 Low/Reverse Clutch (.040")(16 Teeth) 1996-Up	5	
41134E	Steel, A4CF1/A4CF2 Low/Reverse Clutch (.039")(14 Teeth)(5.538"ID) 2006-Up	5	
41139A	Steel Module, F4A41/F4A42/W4A42 1999-Up	1	.STMMITSU11
41139B	Steel Module, F4A51/W4A51 (W4A5A) 1996-Up	1	.STMMITSU12
41139C	Steel Module, F5A51 1999-Up	1	.STMMITSU14
41139E	Steel Module, A4CF1/A4CF2 2006-Up	1	.STMHYUND04
41139G	Steel Module, A5GF1 (Hyundai/Kia) 2006-Up	1	
41139H	Steel Module, A5HF1 (Hyundai/Kia) 2006-Up	1	

PART #	PRESSURE PLATES	QTY	REFERENCE #
41140A	Pressure Plate, F4A41/42/W4A42 Overdrive Clutch (.158")(20 Teeth)(4.650" ID) 1996-Up (Also Fits F4A41/42/W4A42 Underdrive Clutch # 142)	1-2	
41140B	Pressure Plate, F4A51/W4A51(W4A5A)/F5A51 Overdrive Clutch (.159")(20 Teeth)(4.855"ID) 1996-Up (Also Fits F4A51/W4A51(W4A5A)/F5A51 # 141 & # 142 1996-Up)	1-3	
41140C	Pressure Plate, F4A51/W4A51(W4A5A)/F5A51 Overdrive Clutch (.236")(20 Teeth)(4.855"ID) 1996-Up	1	
41140E	Pressure Plate, A4CF1/A4CF2 Overdrive Clutch (.157")(5 Wide Teeth)(4.380"ID) 2006-Up	1	
41140H	Pressure Plate, A5HF1 Overdrive Clutch (.196")(6 Teeth)(4.850"ID) 2006-Up	1	
41141A	Use 41120A	1	
41141B	Use U41140B	1	
41142B	Use U41140B	1	

© Whatever It Takes Transmission Parts. Inc.

41142E ..... Pressure Plate, A4CF1/A4CF2 UnderDrive Clutch (.158")(20 Teeth)(4.775"ID) 2006-Up ..... 1 .....
41142H ..... Pressure Plate, A5HF1 Underdrive Clutch (.196")(20 Teeth)(4.855"ID)(Stepped) 2006-Up ..... 1 .....
41144A..... Use 41155AA To 41155AH ..... 1 .....
41144B ..... Use 41155BA to 41155BM ..... 1 .....
41144E ..... Apply Plate, A4CF1/A4CF2 2nd Brake Clutch (.120")(15 Teeth)(5.128"ID)(Stepped) 2006-Up..... 1 .....
41146CA..... Pressure Plate, F5A51 Direct Clutch (Top)(.237")(20 Teeth)(3.475" ID)(Stepped) 2001-Up..... 1 .....
41146H ..... Pressure Plate, A5HF1 Direct Clutch (Top)(.143")(20Teeth)(3.590"ID)(Stepped) 2006-Up ..... 1 .....
41147C ..... Apply Plate, F5A51 Direct Clutch (Bottom)(.200")(20 Teeth)(3.475" ID)(Stepped) 2001-Up ..... 1 .....
41147CA..... Apply Plate, F5A51/A5HF1 Direct Clutch (Bottom)(.101")(20 Teeth)(3.595"ID)(Stepped)2001-Up 1 .....
41150A..... Pressure Plate, F4A41/F4A42/W4A42 Reverse Clutch (.158")(28 Teeth)(5.250" ID) 1996-Up ..... 1 .....
41150B ..... Pressure Plate, F4A51/F5A51/A5HF1 Reverse Clutch (.158")(28 Teeth)(6.035" ID) 96-Up ..... 1 .....
41150E ..... Pressure Plate, A4CF1/A4CF2 Reverse Clutch (.119")(20 Teeth)(5.091"OD) 2006-Up..... 1 .....
41154A..... Pressure Plate, F4A41/F4A42/W4A42 Low/Reverse & 2nd Clutch (.236")(17 Teeth)(5 1/8" ID)
..... 1996-Up ..... 1 .....
41154B ..... Pressure Plate, F4A51/W4A51(W4A5A)/F5A51/A5HF1 Low/Reverse & 2nd Clutch (.235")
..... (20 Teeth)(6" ID) 1996-Up (Three Teeth Are Wide) ..... 1 .....
41154E ..... Pressure Plate, A4CF1/A4CF2 Low/Reverse & 2nd Clutch (.216")(13 Teeth)(5.130"ID) 2006-Up . 1 45631-23000
41155AA ..... Apply Plate, F4A41/F4A42/W4A42 Low/Reverse Clutch (.063")(17 Teeth) 1996-Up (5.127" ID)
..... (Also Fits F4A41/F4A42/W4A42 2nd Clutch # 144) ..... 1-2 .....
41155AB ..... Apply Plate, F4A41/F4A42/W4A42 Low/Reverse Clutch (.071")(17 Teeth) 1996-Up (5.127" ID)
..... (Also Fits F4A41/F4A42/W4A42 2nd Clutch # 144) ..... 1-2 .....
41155AC ..... Apply Plate, F4A41/F4A42/W4A42 Low/Reverse Clutch (.079")(17 Teeth) 1996-Up (5.127" ID)
..... (Also Fits F4A41/F4A42/W4A42 2nd Clutch # 144) ..... 1-2 .....
41155AD ..... Apply Plate, F4A41/F4A42/W4A42 Low/Reverse Clutch (.087")(17 Teeth) 1996-Up (5.127" ID)
..... (Also Fits F4A41/F4A42/W4A42 2nd Clutch # 144) ..... 1-2 .....
41155AE ..... Apply Plate, F4A41/F4A42/W4A42 Low/Reverse Clutch (.094")(17 Teeth) 1996-Up (5.127" ID)
..... (Also Fits F4A41/F4A42/W4A42 2nd Clutch # 144) ..... 1-2 .....
41155AF ..... Apply Plate, F4A41/F4A42/W4A42 Low/Reverse Clutch (.102")(17 Teeth) 1996-Up (5.127" ID)
..... (Also Fits F4A41/F4A42/W4A42 2nd Clutch # 144) ..... 1-2 .....
41155AG..... Apply Plate, F4A41/F4A42/W4A42 Low/Reverse Clutch (.110")(17 Teeth) 1996-Up (5.127" ID)
..... (Also Fits F4A41/F4A42/W4A42 2nd Clutch # 144) ..... 1-2 .....
41155AH..... Apply Plate, F4A41/F4A42/W4A42 Low/Reverse Clutch (.118")(17 Teeth) 1996-Up (5.127" ID)
..... (Also Fits F4A41/F4A42/W4A42 2nd Clutch # 144) ..... 1-2 .....
41155BA ..... Apply Plate, F4A51/W4A51(W4A5A)/F5A51A5HF1 Low/Reverse Clutch (.063")(16 Teeth)(6"ID)
..... 1996-Up (Also Fits F4A51/W4A51(W4A5A)/F5A51/A5HF1 2nd Clutch # 144) ..... 1-2 .....
41155BB ..... Apply Plate, F4A51/W4A51(W4A5A)/F5A51/A5HF1 Low/Reverse Clutch (.071")(16 Teeth)(6"ID)
..... 1996-Up (Also Fits F4A51/W4A51(W4A5A)/F5A51/A5HF1 2nd Clutch # 144) ..... 1-2 .....
41155BC ..... Apply Plate, F4A51/W4A51(W4A5A)/F5A51/A5HF1 Low/Reverse Clutch (.079")(16 Teeth)(6"ID)
..... 1996-Up (Also Fits F4A51/W4A51(W4A5A)/F5A51/A5HF1 2nd Clutch # 144) ..... 1-2 .....
41155BD ..... Apply Plate, F4A51/W4A51(W4A5A)/F5A51/A5HF1 Low/Reverse Clutch (.087")(16 Teeth)(6"ID)
..... 1996-Up (Also Fits F4A51/W4A51(W4A5A)/F5A51/A5HF1 2nd Clutch # 144) ..... 1-2 .....
41155BE ..... Apply Plate, F4A51/W4A51(W4A5A)/F5A51/A5HF1 Low/Reverse Clutch (.094")(16 Teeth)(6"ID)
..... 1996-Up (Also Fits F4A51/W4A51(W4A5A)/F5A51/A5HF1 2nd Clutch # 144) ..... 1-2 .....
41155BF ..... Apply Plate, F4A51/W4A51(W4A5A)/F5A51/A5HF1 Low/Reverse Clutch (.102")(16 Teeth)(6"ID)
..... 1996-Up (Also Fits F4A51/W4A51(W4A5A)/F5A51/A5HF1 2nd Clutch # 144) ..... 1-2 .....
41155BG..... Apply Plate, F4A51/W4A51(W4A5A)/F5A51A5HF1 Low/Reverse Clutch (.110")(16 Teeth)(6"ID)
..... 1996-Up (Also Fits F4A51/W4A51(W4A5A)/F5A51/A5HF1 2nd Clutch # 144) ..... 1-2 .....
41155BH..... Apply Plate, F4A51/W4A51(W4A5A)/F5A51/A5HF1 Low/Reverse Clutch (.118")(16 Teeth)(6"ID)
..... 1996-Up (Also Fits F4A51/W4A51(W4A5A)/F5A51/A5HF1 2nd Clutch # 144) ..... 1-2 .....
41155BM ..... Apply Plate, F4A51/W4A51(W4A5A)/F5A51/A5HF1 Low/Reverse Clutch (.152")(16 Teeth)(6"ID)
..... 1996-Up (Also Fits F4A51/W4A51(W4A5A)/F5A51/A5HF1 2nd Clutch # 144) ..... 1-2 .....
41155EA ..... Apply Plate, A4CF1/A4CF2 Low/Reverse Clutch (.063")(14 Teeth)(5.542"ID) 2006-Up 1 45635-23160
41155EB ..... Apply Plate, A4CF1/A4CF2 Low/Reverse Clutch (.071")(14 Teeth)(5.542"ID) 2006-Up 1 45635-23180
41155EC ..... Apply Plate, A4CF1/A4CF2 Low/Reverse Clutch (.079")(14 Teeth)(5.542"ID) 2006-Up 1 45635-23200
41155ED ..... Apply Plate, A4CF1/A4CF2 Low/Reverse Clutch (.087")(14 Teeth)(5.542"ID) 2006-Up 1 45635-23220
41155EE ..... Apply Plate, A4CF1/A4CF2 Low/Reverse Clutch (.094")(14 Teeth)(5.542"ID) 2006-Up 1 45635-23240
41155EF ..... Apply Plate, A4CF1/A4CF2 Low/Reverse Clutch (.102")(14 Teeth)(5.542"ID) 2006-Up 1 45635-23260
41155EG..... Apply Plate, A4CF1/A4CF2 Low/Reverse Clutch (.110")(14 Teeth)(5.542"ID) 2006-Up 1 45635-23280
41155EH..... Apply Plate, A4CF1/A4CF2 Low/Reverse Clutch (.118")(14 Teeth)(5.542"ID) 2006-Up 1 45635-23300

PART #	VALVE BODY KITS	QTY	REFERENCE #

T41165A ..... Shift Kit, Fits A4CF1/2/3 (Must use T-A4A6-RV-TK) (TransGo) ..... 1 .....
T-A4A6-RV-TK .. Tool Kit, A4CF1/2/3 Reducing Valve Reamer and Guide (Must use with T41165A) (TransGo) ..... 1 .....

PART #	SEALING RINGS	QTY	REFERENCE #

41175A..... Ring Kit, F4A41/F4A42/F4A51/W4A42/W4A51(W4A5A) 1996-Up ..... 1 .....
41175E ..... Ring Kit, A4CF1/A4CF2 2006-Up ..... 1 .....
41175G ..... Ring Kit, A5GF1 2005-Up ..... 1 .....

© Whatever It Takes Transmission Parts. Inc.

PART #	SEALING RINGS (Continued)	QTY	REFERENCE #
41178AT	Ring, F4A51/F4A42/F4A51/W4A42/W4A51(W4A5A)/F5A51 Input Shaft (Teflon) 1996-Up	2	45431-36001
41178ET	Ring, A4CF1/A4CF2/A5HF1 Input Shaft (.091"Thick)(1.040"OD)(Teflon) 2006-Up	2	45752-39000
41179AT	Ring, F4A41/F4A42/F4A51/W4A42/F5A51/A5HF1 Stator (.089" Thick)(Teflon) 1996-Up	2	45294-39020
41179B	Ring, W4A51(W4A5A)/F5A51 Stator (.093"Thick)(Metal) 2001-Up	2	
41179ET	Ring, A4CF1/A4CF2 Stator (.079"Thick)(2.315"OD)(Teflon) 2006-Up	2	46294-23115
41180CT	Ring, F5A51/A5HF1 Direct Clutch (.089" Thick)(Teflon) 2001-Up	2	
41181A	Ring, F4A41/F4A42/F4A51/W4A42/W4A51 (W4A5A) Reverse Clutch (In Rear Cover)(2.762"OD) (Metal) 1996-Up	2	45295-39020
41181CT	Ring, F5A51 Reverse Clutch (In Rear Cover)(2.325" OD)(Vespel) 2001-Up	2	
41181ET	Ring, A4CF1/A4CF2 Reverse Clutch (In Rear Cover)(.077"Thick)(2.350"OD)(Teflon) 2006-Up	2	
41185A	Ring, F4A41/F4A42/F4A51/W4A42/W4A51 (W4A5A) Overdrive Clutch (In Rear Cover) (2.325" OD)(Metal) 1996-Up	2	45294-39020
41185CT	Ring, F5A51/A5HF1 Overdrive Clutch (In Rear Cover)(2.325" OD)(Vespel) 2001-Up	2	
41185ET	Ring, A4CF/A4CF2 Overdrive Clutch (In Rear Cover)(.079"Thick)(2.030"OD)(Teflon) 2006-Up	2	
41185HT	Ring, A5HF1 Overdrive Clutch (In Rear Cover)(2.290"OD)(Vespel) 2006-Up	1	
41195CT	Ring, F5A51 Reduction Brake Band Servo Piston (.057" Thick)(2.140"OD)(Teflon) 2001-Up	2	45612-39500
41195HT	Ring, A5HF1 Reduction Brake Band Servo Piston (.060" Thick)(2.595"OD)(Teflon) 2006-Up	2	

PART #	WASHERS & BEARINGS	QTY	REFERENCE #
41211AA	Washer, F4A41/F4A42/F4A51/W4A42/W4A51(W4A5A)/F5A51/A4CF1/A4CF2/A5HF1 Stator To Underdrive Drum (.071")(# 18)(Plastic) 1996-Up	1	45544-39180
41211AB	Washer, F4A41/F4A42/F4A51/W4A42/W4A51(W4A5A)/F5A51/A4CF1/A4CF2/A5HF1 Stator To Underdrive Drum (.079")(# 18)(Plastic) 1996-Up	1	45544-39200
41211AC	Washer, F4A41/F4A42/F4A51/W4A42/W4A51(W4A5A)/F5A51/A4CF1/A4CF2/A5HF1 Stator To Underdrive Drum (.087")(# 18)(Plastic) 1996-Up	1	45544-39220
41211AD	Washer, F4A41/F4A42/F4A51/W4A42/W4A51(W4A5A)/F5A51/A4CF1/A4CF2/A5HF1 Stator To Underdrive Drum (.094")(# 18)(Plastic) 1996-Up	1	45544-39240
41211AE	Washer, F4A41/F4A42/F4A51/W4A42/W4A51(W4A5A)/F5A51/A4CF1/A4CF2/A5HF1 Stator To Underdrive Drum (.102")(# 18)(Plastic) 1996-Up	1	45544-39260
41211AF	Washer, F4A41/F4A42/F4A51/W4A42/W4A51(W4A5A)/F5A51/A4CF1/A4CF2/A5HF1 Stator To Underdrive Drum (.110")(# 18)(Plastic) 1996-Up	1	45544-39280
41211E	Washer, A4CF1/A4CF2 Stator To Underdrive Drum (.063")(# 16)(Plastic) 2006-Up	1	45456-23160
41214	Use 41222	1	
41219A	Use 41222A	1	
41219E	Bearing W/Races, A4CF1/A4CF2 Underdrive Clutch Drum To Hub (.195"Thick)(2.278"OD) (1.722"ID) 2006-Up	1	
41222A	Bearing W/Races, F4A41/F4A42/W4A42 2nd Brake Clutch Hub To Overdrive Clutch Hub (.142" Thick)(1.923" OD)(1.344" ID) 1996-Up (Also Fits F4A41/F4A42/W4A42 Overdrive Hub To Reverse Drum # 214 1996-Up) (Also Fits F4A41/42/51/W4A42/51/F5A51/A5HF1 Underdrive Drum To Hub # 219)(Also Fits A4CF1/A4CF2 # 222 & # 214 2006-Up)	1-3	45798-39060
41222B	Bearing W/Races, F4A51/W4A51(W4A5A)/F5A51/A5HF1 2nd Brake Clutch Hub To Overdrive Clutch Hub (.160"Thick)(2.236"OD)(1.550"ID) 1996-Up (Also Fits F4A51/W4A51(W4A5A)/F5A51 /A5HF1 Overdrive Hub To Reverse Drum # 214 1996-Up)	1-2	45798-39560
41223A	Caged Needle Bearing, F4A41/42/51/W4A42/W4A51(W4A5A)/F5A51/A5HF1 Rear Cover To Input Shaft (Cast # Germany HK1616) 1996-Up	1	43275-39060
41223E	Caged Needle Bearing, A4CF1/A4CF2 Rear Cover To Input Shaft (.658"Wide)(.630"ID) 2006-Up	1	
41229C	Bearing W/Race, F5A51/A5HF1 Direct Drum To Case (.130"Thick)(2.278"OD)(1.675"ID) 2001-Up (Goes W/41230C)	1	45748-39560
41230C	Race, F5A51/A5HF1 Direct Drum To Case (.120"Thick)(2.150"OD)(1.700"ID) 2001-Up (Goes W/41229C)	1	45749-39580
41232A	Bearing W/Race, F4A41/F4A42/F4A51/W4A42/W4A51(W4A5A)/F5A51/A5HF1 Reverse Drum To Rear Cover (.110"Thick)(2.315"OD)(1.460"ID) 1996-Up	1	45851-39060
41232E	Bearing W/Race, A4CF1/A4CF2 Reverse Drum To Rear Cover (.110"Thick)(3.108"OD)(2.568"ID) 2006-Up	1	
41233AA	Race, F4A41/F4A42/F4A51/W4A42/W4A51/W4A5A/F5A51/A5HF1 Reverse Drum (.063") 1996-Up	1	45459-39168
41233AB	Race, F4A41/F4A42/F4A51/W4A42/W4A51/W4A5A/F5A51/A5HF1 Reverse Drum (.067") 1996-Up	1	45853-38178
41233AC	Race, F4A41/F4A42/F4A51/W4A42/W4A51/W4A5A/F5A51/A5HF1 Reverse Drum (.071") 1996-Up	1	45459-39188
41233AD	Race, F4A41/F4A42/F4A51/W4A42/W4A51/W4A5A/F5A51/A5HF1 Reverse Drum (.075") 1996-Up	1	45853-39198
41233AE	Race, F4A41/F4A42/F4A51/W4A42/W4A51/W4A5A/F5A51/A5HF1 Reverse Drum (.079") 1996-Up	1	45459-39208
41233AF	Race, F4A41/F4A42/F4A51/W4A42/W4A51/W4A5A/F5A51/A5HF1 Reverse Drum (.083") 1996-Up	1	45853-39218

© Whatever It Takes Transmission Parts. Inc.

41233AG ..... Race, F4A41/F4A42/F4A51/W4A42/W4A51/W4A5A/F5A51/A5HF1 Reverse Drum (.087") ..... 1996-Up 1 45459-39228
41233AH ..... Race, F4A41/F4A42/F4A51/W4A42/W4A51/W4A5A/F5A51/A5HF1 Reverse Drum (.091") ..... 1996-Up 1 45853-39238

41233AJ ..... Race, F4A41/F4A42/F4A51/W4A42/W4A51/W4A5A/F5A51/A5HF1 Reverse Drum (.094") ..... 1996-Up 1 45459-39248
41233AK ..... Race, F4A41/F4A42/F4A51/W4A42/W4A51/W4A5A/F5A51/A5HF1 Reverse Drum (.098") ..... 1996-Up 1 45453-39258
41233AL ..... Race, F4A41/F4A42/F4A51/W4A42/W4A51/W4A5A/F5A51/A5HF1 Reverse Drum (.102") ..... 1996-Up 1 45853-39268
41233EA ..... Race, A4CF1/A4CF2 Reverse Clutch Drum To Rear Cover (Selective)(3.061"OD)(2.675"ID) ..... 2006-Up ..... 1 .....
41246A ..... Bearing W/Race, F4A41/F4A42/W4A42 Output Sun Gear To Overdrive Planet (.130" Thick) ..... (1.785" OD)(1.230" ID) 1996-Up 1 45743-39060
41246B ..... Bearing W/Race, F4A51/W4A51(W4A5A)/F5A51/A5HF1 Output Sun Gear To Overdrive Planet ..... (.130"Thick)(2.115"OD)(1.520"ID) 1996-Up 1 45743-39560
41246E ..... Bearing W/Race, A4CF1/A4CF2 Output Planet Sun Gear To Overdrive Planet (.129"Thick) ..... (1.796"OD)(1.230"ID) 2006-Up 1 45743-23000
41247E ..... Race, A4CF1/A4CF2 Output Planet Sun Gear To Overdrive Planet (.030"Thick)(1.797"OD) ..... (1.276"ID) 2006-Up ..... 1 .....
41248A ..... Bearing W/Races, F4A41/F4A42/W4A42 Output Planet To Sun Gear (.141" Thick)(1.922" OD) ..... (1.345" ID) 1996-Up ..... 1 .....
41248B ..... Bearing W/Races, F4A51/W4A51(W4A5A)/F5A51/A5HF1 Output Planet To Sun Gear ..... (.161" Thick)(2.240" OD)(1.520" ID) 1996-Up ..... 1 .....
41248E ..... Bearing W/Races, A4CF1/A4CF2 Output Planet To Sun Gear (.142"Thick)(1.922"OD)(1.347"ID) ..... 2006-Up ..... 1 .....
41263C ..... Caged Needle Bearing, F5A51/A5HF1 Direct Planet Shaft To Case (.985"ID)(1.300"OD) ..... 2001-Up 1 45299-39510
41273A ..... Cup Race, F4A41/42/W4A42 Pinion (2.955" OD)(Cast KOYO32009J) 1996-Up ..... 1 .....
41273B ..... Cup Race, F4A51/W4A51(W4A5A) Pinion (3.150"OD)(Cast #NSK HR32010XJ) 1996-Up ..... 1 .....
41273E ..... Cup Race, A4CF1/A4CF2 Pinion Shaft To Bell Housing (.552"Thick)(2.440"OD) ..... (Cast # 32007XJHL) 2006-Up (Also Fits A4CF1/A4CF2 Pinion Shaft To Case # 280 2006-Up) .. 1-2 .....
41274A ..... Cone Bearing, F4A41/42/W4A42 Pinion (23 Rollers)(1.770" ID)(Cast# KOYO 32009JR) ..... 1996-Up ..... 1 .....
41274B ..... Cone Bearing, F4A51/W4A51(W4A5A) Pinion (23 Rollers)(1.990"ID)(Cast # NSK 32010XJ) ..... 1996-Up ..... 1 .....
41274C ..... Roller Bearing, F5A51 Pinion (14 Rollers)(3.150" OD)(Cast SFKRNU208 ECP) 2001-Up 1 45725-39750
41274E ..... Cone Bearing, A4CF1/A4CF2 Pinion To Bell Housing (20 Rollers)(.728"Thick)(1.379"ID) ..... (Cast # 32007XJHL) 2006-Up (Also Fits A4CF1/A4CF2 Pinion To Case # 281 2006-Up) ..... 1-2 .....
41274H ..... Roller Bearing, A5HF1 Pinion (15 Rollers)(3.150"OD)(Cast # NTN 2U06082521) 2006-Up ..... 1 .....
41275C ..... Bearing, F5A51/A5HF1 Roller Bearing To Pinion (.098" Thick)(3.140" OD)(2.370" ID) 2001-Up ... 1 45857-39560
41276CA ..... Race, F5A51/A5HF1 Roller Bearing To Pinion (Selective)(.097" Thick)(3.147" OD) ..... (2.365" ID) 2001-Up 1 45858-39580
41277AA ..... Shim, F4A41/F4A42/F4A51/W4A42/W4A51/W4A5A Pinion (.0740")(2.160"OD) 1996-Up 1 45867-39188
41277AB ..... Shim, F4A41/F4A42/F4A51/W4A42/W4A51/W4A5A Pinion (.0756")(2.160"OD) 1996-Up 1 45867-39192
41277AC ..... Shim, F4A41/F4A42/F4A51/W4A42/W4A51/W4A5A Pinion (.0772")(2.160"OD) 1996-Up 1 45867-39196
41277AD ..... Shim, F4A41/F4A42/F4A51/W4A42/W4A51/W4A5A Pinion (.0787")(2.160"OD) 1996-Up 1 45867-39200
41277AE ..... Shim, F4A41/F4A42/F4A51/W4A42/W4A51/W4A5A Pinion (.0803")(2.160"OD) 1996-Up 1 45867-39204
41277AF ..... Shim, F4A41/F4A42/F4A51/W4A42/W4A51/W4A5A Pinion (.0819")(2.160"OD) 1996-Up 1 45867-39208
41277AG ..... Shim, F4A41/F4A42/F4A51/W4A42/W4A51/W4A5A Pinion (.0835")(2.160"OD) 1996-Up 1 45867-39212
41277AH ..... Shim, F4A41/F4A42/F4A51/W4A42/W4A51/W4A5A Pinion (.0850")(2.160"OD) 1996-Up 1 45867-39216
41277AJ ..... Shim, F4A41/F4A42/F4A51/W4A42/W4A51/W4A5A Pinion (.0866")(2.160"OD) 1996-Up 1 45867-39220
41277AK ..... Shim, F4A41/F4A42/F4A51/W4A42/W4A51/W4A5A Pinion (.0882")(2.160"OD) 1996-Up 1 45867-39224
41277AL ..... Shim, F4A41/F4A42/F4A51/W4A42/W4A51/W4A5A Pinion (.0898")(2.160"OD) 1996-Up 1 45867-39228
41277AM ..... Shim, F4A41/F4A42/F4A51/W4A42/W4A51/W4A5A Pinion (.0913")(2.160"OD) 1996-Up 1 45867-39232
41277AN ..... Shim, F4A41/F4A42/F4A51/W4A42/W4A51/W4A5A Pinion (.0929")(2.160"OD) 1996-Up 1 45867-39236
41277AP ..... Shim, F4A41/F4A42/F4A51/W4A42/W4A51/W4A5A Pinion (.0945")(2.160"OD) 1996-Up 1 45867-39240
41277AQ ..... Shim, F4A41/F4A42/F4A51/W4A42/W4A51/W4A5A Pinion (.0961")(2.160"OD) 1996-Up 1 45867-39244
41277AR ..... Shim, F4A41/F4A42/F4A51/W4A42/W4A51/W4A5A Pinion (.0976")(2.160"OD) 1996-Up 1 45867-39248
41277AS ..... Shim, F4A41/F4A42/F4A51/W4A42/W4A51/W4A5A Pinion (.0992")(2.160"OD) 1996-Up 1 45867-39252
41277AT ..... Shim, F4A41/F4A42/F4A51/W4A42/W4A51/W4A5A Pinion (.1008")(2.160"OD) 1996-Up 1 45867-39256
41277AU ..... Shim, F4A41/F4A42/F4A51/W4A42/W4A51/W4A5A Pinion (.1024")(2.160"OD) 1996-Up 1 45867-39260
41277AV ..... Shim, F4A41/F4A42/F4A51/W4A42/W4A51/W4A5A Pinion (.1039")(2.160"OD) 1996-Up 1 45867-39264
41277AW ..... Shim, F4A41/F4A42/F4A51/W4A42/W4A51/W4A5A Pinion (.1055")(2.160"OD) 1996-Up 1 45867-39268
41277AX ..... Shim, F4A41/F4A42/F4A51/W4A42/W4A51/W4A5A Pinion (.1071")(2.160"OD) 1996-Up 1 45867-39272
41277AY ..... Shim, F4A41/F4A42/F4A51/W4A42/W4A51/W4A5A Pinion (.1087")(2.160"OD) 1996-Up 1 45867-39276
41277EA ..... Shim, A4CF1/A4CF2 Pinion To Bell Housing (.033")(2.435"OD) 2006-Up 1 45867-23084
41277EB ..... Shim, A4CF1/A4CF2 Pinion To Bell Housing (.035")(2.435"OD) 2006-Up 1 45867-23088
41277EC ..... Shim, A4CF1/A4CF2 Pinion To Bell Housing (.036")(2.435"OD) 2006-Up 1 45867-23092

© Whatever It Takes Transmission Parts. Inc.

PART #	WASHERS & BEARINGS (Continued)	QTY	REFERENCE #
41277ED	Shim, A4CF1/A4CF2 Pinion To Bell Housing (.038")(2.435"OD) 2006-Up	1	45867-23096
41277EF	Shim, A4CF1/A4CF2 Pinion To Bell Housing (.039")(2.435"OD) 2006-Up	1	45867-23000
41277EG	Shim, A4CF1/A4CF2 Pinion To Bell Housing (.041")(2.435"OD) 2006-Up	1	45867-23004
41277EH	Shim, A4CF1/A4CF2 Pinion To Bell Housing (.043")(2.435"OD) 2006-Up	1	45867-23008
41277EJ	Shim, A4CF1/A4CF2 Pinion To Bell Housing (.044")(2.435"OD) 2006-Up	1	45867-23012
41277EK	Shim, A4CF1/A4CF2 Pinion To Bell Housing (.045")(2.435"OD) 2006-Up	1	45867-23016
41277EL	Shim, A4CF1/A4CF2 Pinion To Bell Housing (.047")(2.435"OD) 2006-Up	1	45867-23020
41277EM	Shim, A4CF1/A4CF2 Pinion To Bell Housing (.048")(2.435"OD) 2006-Up	1	45867-23024
41277EN	Shim, A4CF1/A4CF2 Pinion To Bell Housing (.050")(2.435"OD) 2006-Up	1	45867-23028
41277EP	Shim, A4CF1/A4CF2 Pinion To Bell Housing (.052")(2.435"OD) 2006-Up	1	45867-23032
41277EQ	Shim, A4CF1/A4CF2 Pinion To Bell Housing (.053")(2.435"OD) 2006-Up	1	45867-23036
41279A	Cone Bearing, F4A41/F4A42/W4A42 Drive Transfer Gear (34 Rollers)(2.045" ID) (Cast # KOYO DUF1069S)(Both Sides) 1996-Up	1	
41279B	Cone Bearing, F4A51/W4A51(W4A5A)/F5A51 Drive Transfer Gear (33 Rollers)(2.165" ID) (Cast # KOYO DUF1068BS)(Both Sides) 1996-Up	1	
41279E	Cone Bearing, A4CF1/A4CF2 Drive Transfer Gear To Support (.589"Thick)(2.048"ID) (Cast # LT DT527830HL) 2006-Up (Takes 2)	1	
41279H	Cone Bearing, A5HF1 Drive Transfer Gear (30 Rollers)(2.165"ID)(Cast # LT-DT559034HL) (Both Sides) 2006-Up	1	
41280A	Cup Race, F4A41/F4A42/F4A51/W4A42/W451 (W4A5A) Pinion (Rear)(2.165"OD) (Cast # NSK HR 32006XJ) 1996-Up	1	
41280E	Use 41273E	1	
41281A	Cone Bearing, F4A41/F4A42/F4A51/W4A42/W4A51(W4A5A) Pinion (Rear)(19 Rollers) (1.180" ID)(Cast # NSK HR 32006XJ) 1996-Up	1	
41281C	Cone Bearing, F5A51 Driven Transfer Gear (23 Rollers)(Cast #TOYO 46T090903-2N) 2001-Up	2	
41281E	Use 41274E	1	
41281H	Cone Bearing, A5HF1 Driven Transfer Gear (25 Rollers)(Cast # 46T090903) 2006-Up	2	
41285A	Washer/Retainer, F4A41/W4A42/W4A42 Holds Low Sprag To Ring Gear (.025" Thick)(6 Tab) (4.495" OD) 1996-Up	1	
41285B	Washer/Retainer, F4A51/W4A51(W4A5A)/F5A51/A5HF1 Holds Low Sprag To Ring Gear (.025"Thick)(6 Tab)(5.315"OD) 1996-Up	1	45872-39500
41285E	Washer/Retainer, A4CF1/A4CF2 Holds Low Sprag To Ring Gear (.024"Thick)(4.493"ID)(6 Tab) 2006-Up	1	45868-23000
41288AA	Use 41291AA	1	
41288AC	Use 41291AC	1	
41288C	Use 41291C	1	
41288E	Use 41291E	1	
41289A	Use 41292A	1	
41289AA	Use 41292AA	1	
41289AC	Use 41292AC	1	
41289C	Use 41292C	1	
41289E	Use 41292E	1	
41291AA	Cup Race, F4A41/F4A42/F4A51 Differential To Bell Housing (2.835" OD)(2.401" ID) (Cast # Korean LM501310T9F2 Or KOYO57428-N) 1996-Up (Also Fits F4A41/F4A42/F4A51/W4A42 Differential To Case #288)(Fits The Cone Bearing W/20 Rollers)	1-2	
41291AB	Cup Race, W4A42 Differential To Bell Housing (3.347" OD)(2.927" ID)(Cast# Japan HR 32912J) 2001-Up	1	
41291AC	Cup Race, F4A41/F4A42 Differential To Bell Housing (Fits The Cone Bearing W/17 Rollers) (Also Fits F4A41/F4A42 Differential To Case # 288)	1-2	
41291BC	Cup Race, W4A51(W4A5A) Differential To Bell Housing (3.545"OD)(3.156"ID) (Cast # Japan R65-11 NSK) 2001-Up	1	
41291C	Cup Race, F5A51 Differential To Bell Housing (2.910" OD)(2.517" ID) 2001-Up (Also Fits F5A51 Differential To Case # 288)	1-2	
41291D	Cup Race, W4A51 (AWD) Differential To Bell Housing (3.440" OD)(2.945" ID) (Cast # L5079109 KOREA)	1	
41291E	Cup Race, A4CF1/A4CF2 Differential Housing To Bell Housing (.578"Thick)(2.834"OD) (Cast # LM501310T9F2) 2006-Up (Also Fits A4CF1/A4CF2 Differential To Case # 288 2006-Up)	1-2	
41291H	Cup Race, A5HF1 Differential To Bell Housing (3.155"OD)(2.685"ID) 2006-Up (Also Fits A5HF1 Differential To Case # 288)	1-2	
41292A	Ball Bearing, F4A41/F4A42 Differential To Bell Housing (.715" Thick)(2.835" OD)(1.375" ID) (9 Balls)(Cast # KOYO6207/1B) 1996-Up (Also Fits F4A41/F4A42 Differential To Case # 289)	1-2	51329-38050
41292AA	Cone Bearing, F4A41/F4A42/F4A51 Differential To Bell Housing (20 Rollers)(1.625" ID) (Cast # KOYO LM501349-N) 1996-Up (Also Fits F4A41/F4A42/F4A52/W4A42 Differential To Case # 289)	1-2	
41292AB	Cone Bearing, W4A42 Differential To Bell Housing (36 Rollers)(1.355" ID) (Cast # KOYO HR 32912JA1) 2001-Up	1	

© Whatever It Takes Transmission Parts. Inc.

41292AC.....Cone Bearing, F4A41/F4A42 Differential To Bell Housing (17 Rollers)(Also Fits F4A41/F4A42 .....Differential To Case # 289).....1-2.....
41292BC.....Cone Bearing, W4A51(W4A5A) Differential To Bell Housing (34 Rollers)(2.565"ID) .....(Cast # Japan R65-11 NSK) 2001-Up.....1 .....
41292C.....Cone Bearing, F5A51 Differential To Bell Housing (23 Rollers)(1.770" ID) 2001-Up .....(Also Fits F5A51 Differential To Case # 289).....1 .....
41292D.....Cone Bearing, W4A51 (AWD) Differential To Bell Housing (Cast # Korea l5079109).....1 .....
41292E.....Cone Bearing, A4CF1/A4CF2 Differential To Bell Housing (20 Rollers)(.777"Thick)(1.626"ID) .....(Cast # LM5013499) 2006-Up (Also Fits A4CF1/A4CF2 Differential To Case # 289 2006-Up).....1-2.....
41292H.....Cone Bearing, A5HF1 Differential To Bell Housing (24 Rollers)(1.970"ID) 2006-Up (Also Fits .....A5HF1 Differential To Case # 289).....1-2.....
41293AA.....Shim, F4A41/F4A42/F4A51 Differential To Bell Housing (.0280")(2.788" OD) 1996-Up.....1 45881-38401
41293AB.....Shim, F4A41/F4A42/F4A51 Differential To Bell Housing (.0291")(2.788" OD) 1996-Up.....1 45881-38402
41293AC.....Shim, F4A41/F4A42/F4A51 Differential To Bell Housing (.0303")(2.788" OD) 1996-Up.....1 45881-38403
41293AD.....Shim, F4A41/F4A42/F4A51 Differential To Bell Housing (.0315")(2.788" OD) 1996-Up.....1 43331-37800
41293AE.....Shim, F4A41/F4A42/F4A51 Differential To Bell Housing (.0327")(2.788" OD) 1996-Up.....1 43331-37830
41293AF.....Shim, F4A41/F4A42/F4A51 Differential To Bell Housing (.0339")(2.788" OD) 1996-Up.....1 43331-37860
41293AG.....Shim, F4A41/F4A42/F4A51 Differential To Bell Housing (.0350")(2.788" OD) 1996-Up.....1 43331-37890
41293AH.....Shim, F4A41/F4A42/F4A51 Differential To Bell Housing (.0362")(2.788" OD) 1996-Up.....1 43331-37920
41293AJ.....Shim, F4A41/F4A42/F4A51 Differential To Bell Housing (.0374")(2.788" OD) 1996-Up.....1 43331-37950
41293AK.....Shim, F4A41/F4A42/F4A51 Differential To Bell Housing (.0386")(2.788" OD) 1996-Up.....1 43331-37980
41293AL.....Shim, F4A41/F4A42/F4A51 Differential To Bell Housing (.0398")(2.788" OD) 1996-Up.....1 43331-37010
41293AM.....Shim, F4A41/F4A42/F4A51 Differential To Bell Housing (.0409")(2.788" OD) 1996-Up.....1 43331-37040
41293AN.....Shim, F4A41/F4A42/F4A51 Differential To Bell Housing (.0421")(2.788" OD) 1996-Up.....1 43331-37070
41293AP.....Shim, F4A41/F4A42/F4A51 Differential To Bell Housing (.0433")(2.788" OD) 1996-Up.....1 43331-37100
41293AQ.....Shim, F4A41/F4A42/F4A51 Differential To Bell Housing (.0445")(2.788" OD) 1996-Up.....1 43331-37130
41293AR.....Shim, F4A41/F4A42/F4A51 Differential To Bell Housing (.0457")(2.788" OD) 1996-Up.....1 43331-37160
41293AS.....Shim, F4A41/F4A42/F4A51 Differential To Bell Housing (.0469")(2.788" OD) 1996-Up.....1 43331-37190
41293AT.....Shim, F4A41/F4A42/F4A51 Differential To Bell Housing (.0480")(2.788" OD) 1996-Up.....1 43331-37220
41293AU.....Shim, F4A41/F4A42/F4A51 Differential To Bell Housing (.0492")(2.788" OD) 1996-Up.....1 43331-37250
41293AV.....Shim, F4A41/F4A42/F4A51 Differential To Bell Housing (.0504")(2.788" OD) 1996-Up.....1 43331-37280
41293AW.....Shim, F4A41/F4A42/F4A51 Differential To Bell Housing (.0516")(2.788" OD) 1996-Up.....1 43331-37310
41293AX.....Shim, F4A41/F4A42/F4A51 Differential To Bell Housing (.0528")(2.788" OD) 1996-Up.....1 43331-37340
41293AY.....Shim, F4A41/F4A42/F4A51 Differential To Bell Housing (.0539")(2.788" OD) 1996-Up.....1 43331-37370
41293BA.....Shim, W4A42 Differential To Bell Housing (.0280")(3.318" OD) 2001-Up.....1 .....
41293BB.....Shim, W4A42 Differential To Bell Housing (.0291")(3.318" OD) 2001-Up.....1 .....
41293BC.....Shim, W4A42 Differential To Bell Housing (.0303")(3.318" OD) 2001-Up.....1 .....
41293BD.....Shim, W4A42 Differential To Bell Housing (.0315")(3.318" OD) 2001-Up.....1 .....
41293BE.....Shim, W4A42 Differential To Bell Housing (.0327")(3.318" OD) 2001-Up.....1 .....
41293BF.....Shim, W4A42 Differential To Bell Housing (.0339")(3.318" OD) 2001-Up.....1 .....
41293BG.....Shim, W4A42 Differential To Bell Housing (.0350")(3.318" OD) 2001-Up.....1 .....
41293BH.....Shim, W4A42 Differential To Bell Housing (.0362")(3.318" OD) 2001-Up.....1 .....
41293BJ.....Shim, W4A42 Differential To Bell Housing (.0374")(3.318" OD) 2001-Up.....1 .....
41293BK.....Shim, W4A42 Differential To Bell Housing (.0386")(3.318" OD) 2001-Up.....1 .....
41293BL.....Shim, W4A42 Differential To Bell Housing (.0398")(3.318" OD) 2001-Up.....1 .....
41293BM.....Shim, W4A42 Differential To Bell Housing (.0409")(3.318" OD) 2001-Up.....1 .....
41293BN.....Shim, W4A42 Differential To Bell Housing (.0421")(3.318" OD) 2001-Up.....1 .....
41293BP.....Shim, W4A42 Differential To Bell Housing (.0433")(3.318" OD) 2001-Up.....1 .....
41293BQ.....Shim, W4A42 Differential To Bell Housing (.0445")(3.318" OD) 2001-Up.....1 .....
41293BR.....Shim, W4A42 Differential To Bell Housing (.0457")(3.318" OD) 2001-Up.....1 .....
41293BS.....Shim, W4A42 Differential To Bell Housing (.0469")(3.318" OD) 2001-Up.....1 .....
41293BT.....Shim, W4A42 Differential To Bell Housing (.0480")(3.318" OD) 2001-Up.....1 .....
41293BU.....Shim, W4A42 Differential To Bell Housing (.0492")(3.318" OD) 2001-Up.....1 .....
41293BV.....Shim, W4A42 Differential To Bell Housing (.0504")(3.318" OD) 2001-Up.....1 .....
41293BW.....Shim, W4A42 Differential To Bell Housing (.0516")(3.318" OD) 2001-Up.....1 .....
41293BX.....Shim, W4A42 Differential To Bell Housing (.0528")(3.318" OD) 2001-Up.....1 .....
41293BY.....Shim, W4A42 Differential To Bell Housing (.0539")(3.318" OD) 2001-Up.....1 .....
41293CA.....Shim, F5A51 Differential To Bell Housing (.0280")(2.910" OD) 2001-Up.....1 45849-39571
41293CB.....Shim, F5A51 Differential To Bell Housing (.0291")(2.910" OD) 2001-Up.....1 45849-39574
41293CC.....Shim, F5A51 Differential To Bell Housing (.0303")(2.910" OD) 2001-Up.....1 45849-39577
41293CD.....Shim, F5A51 Differential To Bell Housing (.0315")(2.910" OD) 2001-Up.....1 45849-39580
41293CE.....Shim, F5A51 Differential To Bell Housing (.0327")(2.910" OD) 2001-Up.....1 45849-39583
41293CF.....Shim, F5A51 Differential To Bell Housing (.0339")(2.910" OD) 2001-Up.....1 45849-39586
41293CG.....Shim, F5A51 Differential To Bell Housing (.0350")(2.910" OD) 2001-Up.....1 45849-39589
41293CH.....Shim, F5A51 Differential To Bell Housing (.0362")(2.910" OD) 2001-Up.....1 45849-39592
41293CJ.....Shim, F5A51 Differential To Bell Housing (.0374")(2.910" OD) 2001-Up.....1 45849-39595
41293CK.....Shim, F5A51 Differential To Bell Housing (.0386")(2.910" OD) 2001-Up.....1 45849-39598
41293CL.....Shim, F5A51 Differential To Bell Housing (.0398")(2.910" OD) 2001-Up.....1 45849-39501
41293CM.....Shim, F5A51 Differential To Bell Housing (.0409")(2.910" OD) 2001-Up.....1 45849-38504
41293CN.....Shim, F5A51 Differential To Bell Housing (.0421")(2.910" OD) 2001-Up.....1 45849-39507

© Whatever It Takes Transmission Parts. Inc.

PART #	WASHERS & BEARINGS (Continued)	QTY	REFERENCE #
41293CP	Shim, F5A51 Differential To Bell Housing (.0433")(2.910" OD) 2001-Up	1	45849-39510
41293CQ	Shim, F5A51 Differential To Bell Housing (.0445")(2.910" OD) 2001-Up	1	45849-39513
41293CR	Shim, F5A51 Differential To Bell Housing (.0457")(2.910" OD) 2001-Up	1	45849-39516
41293CS	Shim, F5A51 Differential To Bell Housing (.0469")(2.910" OD) 2001-Up	1	45849-39519
41293CT	Shim, F5A51 Differential To Bell Housing (.0480")(2.910" OD) 2001-Up	1	45849-39522
41293CU	Shim, F5A51 Differential To Bell Housing (.0492")(2.910" OD) 2001-Up	1	45849-39525
41293CV	Shim, F5A51 Differential To Bell Housing (.0504")(2.910" OD) 2001-Up	1	45849-39528
41293CW	Shim, F5A51 Differential To Bell Housing (.0516")(2.910" OD) 2001-Up	1	45849-39531
41293CX	Shim, F5A51 Differential To Bell Housing (.0528")(2.910" OD) 2001-Up	1	45849-39534
41293CY	Shim, F5A51 Differential To Bell Housing (.0539")(2.910" OD) 2001-Up	1	45849-39537
41293DA	Shim, W4A51(W4A5A) Differential To Bell Housing (Selective)(3.415"OD) 2001-Up	1	
41293EA	Shim, A4CF1/A4CF2 Differential To Bell Housing (.035")(2.794"OD) 2006-Up	1	45869-23089
41293EB	Shim, A4CF1/A4CF2 Differential To Bell Housing (.036")(2.794"OD) 2006-Up	1	45869-23092
41293EC	Shim, A4CF1/A4CF2 Differential To Bell Housing (.037")(2.794"OD) 2006-Up	1	45869-23095
41293ED	Shim, A4CF1/A4CF2 Differential To Bell Housing (.038")(2.794"OD) 2006-Up	1	45869-23098
41293EE	Shim, A4CF1/A4CF2 Differential To Bell Housing (.039")(2.794"OD) 2006-Up	1	45869-23001
41293EF	Shim, A4CF1/A4CF2 Differential To Bell Housing (.041")(2.794"OD) 2006-Up	1	45869-23004
41293EG	Shim, A4CF1/A4CF2 Differential To Bell Housing (.042")(2.794"OD) 2006-Up	1	45869-23007
41293EH	Shim, A4CF1/A4CF2 Differential To Bell Housing (.043")(2.794"OD) 2006-Up	1	45869-23010
41293EJ	Shim, A4CF1/A4CF2 Differential To Bell Housing (.044")(2.794"OD) 2006-Up	1	45869-23013
41293EK	Shim, A4CF1/A4CF2 Differential To Bell Housing (.046")(2.794"OD) 2006-Up	1	45869-23016
41293EL	Shim, A4CF1/A4CF2 Differential To Bell Housing (.047")(2.794"OD) 2006-Up	1	45869-23019
41293EM	Shim, A4CF1/A4CF2 Differential To Bell Housing (.048")(2.794"OD) 2006-Up	1	45869-23022
41293EN	Shim, A4CF1/A4CF2 Differential To Bell Housing (.049")(2.794"OD) 2006-Up	1	45869-23025
41293EP	Shim, A4CF1/A4CF2 Differential To Bell Housing (.050")(2.794"OD) 2006-Up	1	45869-23028
41293EQ	Shim, A4CF1/A4CF2 Differential To Bell Housing (.052")(2.794"OD) 2006-Up	1	45869-23031
41293ER	Shim, A4CF1/A4CF2 Differential To Bell Housing (.053")(2.794"OD) 2006-Up	1	45869-23034
41293ES	Shim, A4CF1/A4CF2 Differential To Bell Housing (.054")(2.794"OD) 2006-Up	1	45869-23037
41293ET	Shim, A4CF1/A4CF2 Differential To Bell Housing (.055")(2.794"OD) 2006-Up	1	45869-23040
41293EU	Shim, A4CF1/A4CF2 Differential To Bell Housing (.056")(2.794"OD) 2006-Up	1	45869-23043
41293EV	Shim, A4CF1/A4CF2 Differential To Bell Housing (.057")(2.794"OD) 2006-Up	1	45869-23046
41293HA	Shim, A5HF1 Differential To Bell Housing (.0280" Thick)(3.110"OD) 2006-Up	1	45849-39840
41293HB	Shim, A5HF1 Differential To Bell Housing (.0291" Thick)(3.110"OD) 2006-Up	1	45849-39843
41293HC	Shim, A5HF1 Differential To Bell Housing (.0303" Thick)(3.110"OD) 2006-Up	1	45849-39846
41293HD	Shim, A5HF1 Differential To Bell Housing (.0315" Thick)(3.110"OD) 2006-Up	1	45849-39849
41293HE	Shim, A5HF1 Differential To Bell Housing (.0327" Thick)(3.110"OD) 2006-Up	1	45849-39883
41293HF	Shim, A5HF1 Differential To Bell Housing (.0339" Thick)(3.110"OD) 2006-Up	1	45849-39886
41293HG	Shim, A5HF1 Differential To Bell Housing (.0350" Thick)(3.110"OD) 2006-Up	1	45849-39889
41293HH	Shim, A5HF1 Differential To Bell Housing (.0362" Thick)(3.110"OD) 2006-Up	1	45849-39892
41293HJ	Shim, A5HF1 Differential To Bell Housing (.0374" Thick)(3.110"OD) 2006-Up	1	45849-39895
41293HK	Shim, A5HF1 Differential To Bell Housing (.0386" Thick)(3.110"OD) 2006-Up	1	45849-39898
41293HL	Shim, A5HF1 Differential To Bell Housing (.0398" Thick)(3.110"OD) 2006-Up	1	45849-39801
41293HM	Shim, A5HF1 Differential To Bell Housing (.0409" Thick)(3.110"OD) 2006-Up	1	45849-39804
41293HN	Shim, A5HF1 Differential To Bell Housing (.0421" Thick)(3.110"OD) 2006-Up	1	45849-39807
41293HP	Shim, A5HF1 Differential To Bell Housing (.0433" Thick)(3.110"OD) 2006-Up	1	45849-39810
41293HQ	Shim, A5HF1 Differential To Bell Housing (.0445" Thick)(3.110"OD) 2006-Up	1	45849-39813
41293HR	Shim, A5HF1 Differential To Bell Housing (.0457" Thick)(3.110"OD) 2006-Up	1	45849-39816
41293HS	Shim, A5HF1 Differential To Bell Housing (.0469" Thick)(3.110"OD) 2006-Up	1	45849-39819
41293HT	Shim, A5HF1 Differential To Bell Housing (.0480" Thick)(3.110"OD) 2006-Up	1	45849-39822
41293HU	Shim, A5HF1 Differential To Bell Housing (.0492" Thick)(3.110"OD) 2006-Up	1	45849-39825
41293HV	Shim, A5HF1 Differential To Bell Housing (.0504" Thick)(3.110"OD) 2006-Up	1	45849-39828
41293HW	Shim, A5HF1 Differential To Bell Housing (.0516" Thick)(3.110"OD) 2006-Up	1	45849-39831
41293HX	Shim, A5HF1 Differential To Bell Housing (.0528" Thick)(3.110"OD) 2006-Up	1	45849-39834
41293HY	Shim, A5HF1 Differential To Bell Housing (.0539" Thick)(3.110"OD) 2006-Up	1	45849-39837

PART #	GASKETS & O-RINGS	QTY	REFERENCE #
41300EF	Gasket, A4CF1/A4CF2 Pan 2006-Up (Duraprene)	1	
41301A	Gasket, F4A41/42/W4A42 Side Pan 1996-Up	1	
41301B	Gasket, F4A51/W4A51(W4A5A/F5A51/A5HF1 Side Pan 1996-Up	1	
41310A	Gasket, F4A41/42/W4A42 Pump To Case 1996-Up	1	
41310B	Gasket, F4A51/W4A51(W4A5A/F5A51/A5HF1 Side Pan 1996-Up	1	
41311A	O-Ring, F4A41/F4A42/F4A51/W4A42/W4A51(W4A5A)/F5A51/A4CF1/A4CF2/A5GF1/A5HF1 Pump Body 1996-Up	1	
41320A	Gasket, F4A41/42/51 Valve Body Plate To Case 1996-E98	1	
41320AA	Gasket, F4A41/F4A42/F4A51 Valve Body Plate To Case L1998-Up	1	
41342A	Seal Tube, F4A41/F4A42/W4A42 2nd Brake Clutch To Case (1.465" Long) 1996-Up	1	

© Whatever It Takes Transmission Parts. Inc.

41342B ..... Seal Tube, F4A51/W4A51(W4A5A)/F5A51/A5HF1 2nd Brake Clutch To Case (1.345"Long) ..... 1996-Up ..... 1 .....
41344A ..... O-Ring, F4A41/F4A51/W4A42/W4A51(W4A5A)/F5A51 Rear Cover To Case ..... (Small, Takes 3 To 6) 1996-Up ..... 3-6 .....
41344H ..... O-Ring, A5HF1 Rear Cover To Case (.100" Thick) 2006-Up ..... 6 .....
41345A ..... O-Ring, F4A41/F4A42/F4A51/W4A42/W4A51(W4A5A)/F5A51 Bell Housing To Case ..... (.074" Thick)(Small, Takes 2) 1996-Up ..... 2 .....
41345H ..... O-Ring, A5HF1 Bell Housing To Case (.094" Thick)(Small, Takes 2) 2006-Up ..... 2 .....
41360C ..... O-Ring, F5A51 Servo Cover (.080" Thick)(2.035"OD) 2001-Up ..... 2 .....
41360H ..... O-Ring, A5HF1 Servo Cover (.077" Thick)(2.455"OD) 2006-Up ..... 2 .....

PART #	TECHNICAL MANUALS	QTY	REFERENCE #

41400B ..... Tech Manual, F4A41/F4A42/F4A51/W4A42/W4A51(W4A5A) 4 Speed FWD 1996-Up ..... 1 .....
41400C ..... Tech Manual, F5A51/A5GF1/A5HF1 5 Speed FWD 1997-Up ..... 1 .....
41400E ..... Tech Manual, A4CF2 2006-Up ..... 1 .....
41401B ..... Tech Manual On CD, F4A41/F4A42/F4A51/W4A42/W4A51(W4A5A) 4 Speed FWD 1996-Up ..... 1 .....
41401C ..... Tech Manual On CD, F5A51 5 Speed FWD 1997-Up (Also A5GF1/A5HF1) ..... 1 .....

PART #	ELECTRICAL COMPONENTS	QTY	REFERENCE #

41410B ..... Switch, F4A41/F4A42/F4A51/W4A42/W4A51(W4A5A)/F5A51/A5HF1 Neutral Safety (10 Prong) ..... 1996-Up ..... 1 .....
41410E ..... Switch, A4CF1/A4CF2 Neutral Safety (10 Prong Connector)(Cast # PA66-6F15) 2006-Up 1 45700-23010
T41420K ..... Solenoid Master Kit, F4A41/F4A42/F4A51/W4A42/W4A51(W4A5A)(5 Solenoids W/Wire ..... Harness W/TOT Sensor) 1996-04 (Teckpak) ..... 1 .....
T41420AK ..... Solenoid Master Kit, F5A51 (6 Solenoids W/Wire Harness) 2001-04 (Teckpak) ..... 1 .....
T41420ACK ..... Solenoid Master Kit, F4A41/F4A42/W4A51/W4A42/W4A51(W4A5A)(6 Solenoids W/Wire ..... Harness) 2005-Up (Teckpak) ..... 1 .....
T41420CAK ..... Solenoid Master Kit, F5A51/A5HF1 (7 Solenoids W/Wire Harness) 2005-Up (Teckpak) ..... 1 .....
T41420E ..... Solenoid, A4CF1/A4CF2 (5 Pack) 2006-Up (Teckpak) ..... 1 .....
41421E ..... Solenoid, A4CF1/A4CF2 Overdrive & Low/Reverse Switch Valve (2 Blade Connector) ..... (Cast # F0227-1887) 2006-Up ..... 1 .....
41422E ..... Solenoid, A4CF1/A4CF2 2nd Brake Clutch (2-4)(2 Blade Connector)(Cast # F0227-1890) ..... 2006-Up ..... 1 .....
T41425A ..... Solenoid, F4A41/F4A42/F4A51/W4A42/W4A51(W4A5A)/F5A51 (TCC/Overdrive/2nd/Underdrive ..... & Low/Reverse) 1996-Up ..... 1 .....
41425E ..... Solenoid, A4CF1/A4CF2 TCC (2 Blade Connector)(Cast # F0227-1888) 2006-Up ..... 1 .....
41426E ..... Solenoid, A4CF1/A4CF2 Underdrive Clutch (2 Blade Connector)(Cast # F0227-1889) 2006-Up ..... 1 .....
41427E ..... Solenoid, A4CF1/A4CF2 Overdrive & Low/Reverse Clutch (2 Blade Connector) ..... (Cast # F0227-1886) 2006-Up 1 46340-23010
T41435A ..... Solenoid, F4A41/F4A42/F4A51/W4A42/W4A52(W4A5A)/F5A51(A5HF-1)(ForceMotor) 2005-Up ..... (Teckpak) ..... 1 .....
41435E ..... Solenoid, A4CF1/A4CF2 VFS (Variable Force)(2 Blade Connector)(Cast # UNICK F02 25-0093) ..... 2006-Up 1 46313-23010
41436A ..... Sensor, F4A51/F4A42/F4A51/W4A42/W4A51(W4A5A)/F5A51 Output Speed (Cast #G4T08371) ..... 1996-Up (Use T41436B) ..... 1 .....
41436B ..... Sensor, F4A41/F4A42/F4A51/W4A42/W4A51(W4A5A)/F5A51/A5HF1 Output Speed ..... (Cast #42621-39052) 1996-Up 1 42621-39200
41436E ..... Sensor, A4CF1/A4CF2 Output Speed (3 Prong)(Cast # 42621-39052) 2006-Up 1 42261-39052
42436LC ..... Sensor, A4AF3 Output Speed 2006-Up ..... 1 .....
41437A ..... Sensor, F4A41/F4A42/F4A51/W4A42/W4A51(W4A5A)/F5A51 Fluid Temperature (2 Prong) ..... (1 Bolt, Plastic) 1996-Up ..... 1 .....
41438A ..... Sensor, F4A41/F4A42/F4A51/W4A42/F5A51 Input Speed (CastG4T08072) 1996-Up ..... (Use T41438B) ..... 1 .....
41438B ..... Sensor, F4A41/F4A42/F4A51/W4A42/W4A51(W4A5A)/F5A51/A5HF1 Input Speed ..... (Cast #42620-39051) 1996-Up 1 42620-39200
41438E ..... Sensor, A4CF1/A4CF2 Input Speed (3 Prong)(Cast # 42620-39051) 2006-Up 1 42260-39051
T41444E ..... Harness. A4CF1/A4CF2 With Case Connector 2006-Up (Teckpak)(Connects To T41446E) ..... 1 .....
41446A ..... Wire Harness, F4A41/F4A42 Internal (W/10 Prong Case Connector, 5 Three Prong Connectors ..... & 1 Temperature Plug) ..... 1 .....
T41446AA ..... Wire Harness, F4A41/F4A42/F4A51/W4A42/W4A51(W4A5A) Internal (W/10 Prong Case ..... Connector, 3 Three Prong, 2 Two Prong, & 1 Temperature Plug)(Teckpak) 1996-04 ..... 1 .....
T41446AB ..... Wire Harness, F5A51(Hyundai) Internal 1999-04 (W/10 Prong Case Connector, 4 Three Prong, ... 2 Two Prong & 1 Temperature Plug) ..... 1 .....
T41446AC ..... Wire Harness, F4A51/F4A42/F4A51/W4A42/W4A51(W4A5A) Internal 2005-Up (Teckpak) ..... (Also Sell T41437A Also) ..... 1 .....
T41446CA ..... Wire Harness, F5A51/A5HF1 Internal 2005-Up (Teckpak) ..... 1 .....
T41446E ..... Wire Harness, A4CF1/A4CF2 Internal (6 Solenoid)(Connects To T41444E) 2006-Up ..... 1 .....
41446-4E ..... Clip, A4CF1/A4CF2 Holds Wire Harness Connector To Case (.047"Thick) 2006-Up 1 45310-39000

© Whatever It Takes Transmission Parts. Inc.

PART #	MISCELLANEOUS COMPONENTS	QTY	REFERENCE #
41490BA	Vent, W4A51(W4A5A) Case (Bonded Rubber)(1.585"OD)(W/Tube)	1	

PART #	HARDPARTS	QTY	REFERENCE #
41500A	Pump, F4A41/F4A42 (Aluminum Stator Cast # F4A)(Must Use Pump Alignment Tool T-41005-TL)	1	.46110-39000
41500B	Pump, F4A51/W4A51(W4A5A)(Aluminum Stator Cast # 299) 1996-Up (Must Use Pump Alignment Tool # T-41005-TL)	1	
41500E	Pump, A4CF1/A4CF2 (Aluminum Stator) (Cast Iron Body Cast # T11) 2006-Up	1	.46110-23000
41510A	Body W/Gears, F4A51/F4A42/F4A51/W4A42/W4A51(W4A5A)/F5A51 (Aluminum) (Cast # 500282 Or 46122-39000) 1996-Up (No Front Seal) (Must Use Tool T-41005-TL)	1	
41510E	Body W/Gears, A4CF1/A4CF2 (Cast Iron)(Cast # T11)(Gears Are .405" Thick)(9 Lobes On Inner Gear & 10 Lobes On Outer Gear) 2006-Up	1	
41510H	Body W/Gears, A54HF1 (Cast Iron)(Gears Are .742" Thick)(11 Lobes On Inner Gear & 11 Lobes On Outer Gear) 2006-Up	1	
41520A	Stator, F4A41/F4A42 (Aluminum)(Cast # F4A)(7 7/8" OD) 1996-Up (Must Use Pump Alignment Tool # T-41005-TL)	1	
41520AA	Stator, F4A41/F4A42/W4A42 (Aluminum)(Cast # 300)(7 7/8" OD) 1996-Up (Must Use Pump Alignment Tool # T-41005-TL)	1	
41520B	Stator, F4A51/W4A51(W4A5A)/F5A51 (Aluminum)(Cast # FA5 Or 299)(8 3/8""OD) (With Aluminum Ring Tower) 1997-Up (Must Use T-41005-TL)	1	
41520E	Stator, A4CF1/A4CF2 (Aluminum)(7 Bolts To Case) 2006-Up (Must Use T-41005-TL)	1	
41520H	Stator, A5HF1 (Aluminum)(Cast # GF1)(7 7/8"OD)(With Steel Ring Tower)(With Hole On The OD Of Stator For Crossover Tube) 2006-Up (Must Use T-41005-TL)	1	
41520HA	Stator, A5HF1 (Aluminum)(Cast # FA4)(7 7/8"OD)(With Steel Ring Tower)(Without Hole On The OD Of Stator For Crossover Tube) 2006-Up (Must Use T-41005-TL)	1	
41520HB	Stator, A5HF1 (Aluminum)(Cast # HF1)(8 3/8"OD)(With Steel Ring Tower)(Without Hole On The OD Of Stator For Crossover Tube) 2006-Up (Must Use T-41005-TL)	1	
41530A	Pump Gear Set, F4A41/F4A42/F4A51/W4A42/W4A51(W4A5A)/F5A51/A5HF1 (.472"Thick) (11 Lobes On Inner Gear & 13 Lobes On Outer Gear) 1996-Up	1	
41530E	Pump Gear Set, A4CF1/A4CF2 (.405"Thick)(3.532"OD)(10 Lobes On Outer Gear, 9 Lobes On Inner Gear) 2006-Up	1	
41550A	Drum, F4A41/F4A42/W4A42 Overdrive (3 Clutch)(Cast # 500738) 1996-Up (Aluminum) (Snap Ring Groove Is .345" From Edge Of Drum)	1	.45441-39000
41550AA	Drum, F4A41/F4A42/W4A42 Overdrive (4 Clutch)(Cast # 500738) 1996-Up (Aluminum) (Snap Ring Groove Is .180" From Edge Of Drum)	1	
41550B	Drum, F4A51/W4A51(W4A5A)/F5A51 Overdrive Clutch (4 Clutch)(Cast #500744)(Aluminum) (30 Lugs For Steels)(Snap Ring Groove Is .225" From Edge Of Drum) 1996-Up	1	.45441-39501
41550E	Drum/Piston, A4CF1/A4CF2 Overdrive (4 Clutch)(2.000"Thick)(W/5 Slots For Wide Steel Teeth) 2006-Up	1	.45520-23000
41550EA	Drum/Piston, A4CF1/A4CF2 Overdrive Bonded (4 Clutches)(1.780"Tall)(30 Tooth Steels)	1	
41550H	Drum, A5HF1 Overdrive Clutch (4 Clutch)(Aluminum)(6 Cutouts, 18 Lugs For Steels)(Snap Ring Groove Is .170" From Edge Of Drum) 2006-Up	1	
41551A	Drum, F4A41/F4A42 Underdrive Clutch (3 Clutch)(W/60 Teeth Reluctor)(6 1/16" OD Reluctor) 1996-Up	1	.45514-39001
41551AC	Drum, F4A41/W4A42/W4A42 Underdrive Clutch (4 Clutch)(W/60 Teeth Reluctor)(6 1/16" OD Reluctor) 1996-Up	1	
41551B	Drum, F4A51/W4A51(W4A5A)/F5A51 Underdrive Clutch (4 Clutch)(W/60 Teeth Reluctor) (6 5/8"OD Reluctor)(1.915" Overall Height) 1996-Up	1	.45514-39502
41551BA	Drum, F5A51/A5HF1 Underdrive Clutch (4 Clutch)(W/60 Teeth Reluctor)(6 5/8"OD Reluctor) (1.840" Overall Height) 2001-Up	1	
41551E	Drum, A4CF1/A4CF2 Underdrive Clutch (3 Clutch)(Stamped Steel)(No Reluctor) 2006-Up	1	.45414-23000
41555C	Drum, F5A51 Direct Clutch (3 Clutch) (W/32 Teeth, 1 Groove Sun Gear) 2001-Up	1	.45571-39501
41555H	Drum, A5HF1 Direct Clutch (3 Clutch)(W/32 Teeth, No Groove Sun Gear) 2006-Up	1	
41556A	Drum, F4A41/F4A42/W4A42 Reverse Clutch (2 Clutch)(6 1/4" OD) 1996-Up	1	.45435-39001
41556B	Drum, F4A51/W4A51(W4A5A)/F5A51 Reverse Clutch (2 Clutch)(7"OD)(17 Inner Splines) 1996-Up	1	.45435-39501
41556E	Drum, A4CF1/A4CF2 Reverse Clutch (3 Clutch)(3.145"Overall Height)(6 1/4"OD) 2006-Up	1	.45514-23000
41556EA	Drum, A4CF1/A4CF2 Overdrive Clutch (3 Clutches)(2.995"Tall)(6 5/16"OD)(Stamped Steel) (No Reluctor)	1	
41556H	Drum, A5HF1 Reverse Clutch (2 Clutch)(7"OD)(18 Inner Splines) 2006-Up	1	
41560A	Piston Kit, F4A41/F4A42/W4A42 Overdrive Clutch (Cast # 500747) 1996-Up	1	
41560B	Piston Kit, F4A51/W4A51(W4A5A)/F5A51 Overdrive Clutch (Cast # 500754) 1996-Up	1	
41560E	Piston Kit, A4CF1/A4CF2 Overdrive Clutch (Piston Cast # 45535-23001) 2006-Up	1	
41561A	Piston Kit, F4A41/W4A42/W4A42 Underdrive Clutch (5.357" OD Aluminum Piston) 1996-Up	1	
41561B	Piston Kit, F4A51/W4A51(W4A5A)/F5A51 Underdrive Clutch (5.672"OD Aluminum Piston) 1996-Up	1	
41561E	Piston Kit, A3CF1/A4CF2 Under Drive Clutch (Piston Cast #45423-23001) 2006-Up	1	

© Whatever It Takes Transmission Parts. Inc.

41562A	Piston Kit, F4A41/W4A42/W4A42 2nd Brake Clutch (.690" Thick)(6 5/8" OD Piston) 1996-Up	1	
41562B	Piston Kit, F4A51/W4A51(W4A5A)/F5A51/A5HF1 2nd Brake Clutch (.655"Thick) (7 1/2"OD Piston) 1996-Up	1	
41562BA	Piston Kit, F4A51/W4A51(W4A5A)/F5A51 2nd Brake Clutch (.735"Thick)(7 1/2"OD Piston) 1996-up	1	
41562E	Piston Kit, A4CF1/A4CF2 2nd Brake Clutch 2006-Up	1	
41565C	Piston Kit, F5A51/A5HF1 (Aluminum Piston Is 2.245" ID)(4 Pieces) 2001-Up	1	
41567A	Piston Kit, F4A41/F4A42/W4A42 Low/Reverse Clutch (Piston Is 6 3/16" OD)(.925" Thick At Edge) 1996-Up	1	
41567AA	Piston Kit, F4A41/F4A42/F4A51/W4A42/W4A51(W4A5A) Low/Reverse Clutch (Piston Is 6 3/16"OD)(1.015"Thick At Edge) 1996-Up	1	
41567AB	Piston Kit, F4A41/F4A42/W4A42 Low/Reverse Clutch (Piston Is 6 3/16" OD)(.845" Thick At Edge) 1996-Up	1	
41567B	Piston Kit, F4A51/W4A51(W4A5A)/F5A51 Low/Reverse Clutch (Piston Is 7"OD)(.970"Thick At Edge) 1996-Up	1	
41567BA	Piston Kit, F4A51/W4A51(W4A5A)/F5A51 Low/Reverse Clutch (Piston Is 7"OD)(.850"Thick At Edge) 1996-Up	1	
41567E	Piston Kit, A4CF1/A4CF2 Low/Reverse Clutch (Piston Cast # GMB2) 2006-Up	1	
41570A	Hub, F4A41/F4A42/W4A42 Overdrive Clutch (4.560" OD Hub)(.990" OD Shaft) 1996-Up	1	45461-39004
41570B	Hub, F4A51/W4A51(W4A5A)/F5A51/A5HF1 Overdrive Clutch (4.760"OD Hub)(1.080"OD Shaft) 1996-Up	1	45461-39530
41570E	Hub, A4CF1/A4CF2 Overdrive Clutch (4.250"OD Hub)(.990"OD Shaft) 2006-Up	1	45557-23011
41571A	Hub, F4A41/F4A42/W4A42 Underdrive Clutch (4.515" OD) 1996-Up	1	45541-39000
41571B	Hub, F4A51/W4A51(W4A5A)/F5A51/A5HF1 Underdrive Clutch (4.715"OD) 1996-Up	1	45451-3A510
41571E	Hub, A4CF1/A4CF2 Underdrive Clutch (4.636"OD) 2006-Up	1	45541-23000
41578A	Hub W/Sun Gear, F4A41/F4A42/W4A42 2nd Brake Clutch (25 Teeth Sun Gear)(2.327"Wide) (4.995"OD Hub) 1996-Up	1	45790-39010
41578B	Hub W/Sun Gear, F4A51/W4A51(W4A5A)/F5A51 2nd Brake Clutch (25 Teeth)(5.900"OD) 1996-Up	1	45790-39540
41578BA	Hub W/Sun Gear, F4A51/W4A51(W4A5A)/F5A51 2nd Brake Clutch (31 Teeth)(5.900"OD) 1996-Up	1	
41578E	Hub W/Sun Gear, A4CF1/A4CF2 2nd Brake Clutch (25 Teeth Sun Gear)(2.700"Wide) (4.995"OD Hub) 2006-Up	1	45790-23000
41578H	Hub W/Sun Gear, A5HF1 2nd Brake Clutch (25 Teeth)(5.900"OD)(W/40 Oval Holes) 2006-Up	1	
41580A	Planet, F4A41/F4A42/W4A42 Overdrive (Rear)(3 Gear)(18 Teeth Each Gear, W/1 Groove) 1996-Up	1	45760-39002
41580B	Planet, F4A51/W4A51(W4A5A)/F5A51 Overdrive (Rear)(3 Gear)(21 Teeth Each Gear) 1996-Up	1	45760-39532
41580BA	Planet, F4A51/W4A51(W4A5A)/F5A51/A5HF1 Overdrive (Rear)(3 Gear)(18 Teeth Each Gear) 1996-Up	1	
41580C	Planet, F4A51/W4A51(W4A5A)/F5A51 Overdrive (Rear)(4 Gear)(21 Teeth Each Gear, 2 Grooves) 1996-Up	1	
41580E	Planet, A4CF1/A4CF2 Overdrive (Rear)(3 Gear)(18 Teeth Each Gear, W/2 Grooves) 2006-Up	1	45760-23000
41583A	Planet Kit, F4A41 Non Sprag Type (Contains 584A,248A,614A,246A,594A,580A,867A,578A) (# 584A Has A 62 Teeth Ring Gear & No Bushing Inside)	1	
41583AA	Planet Kit, F4A41/F4A42/W4A42 Sprag Type (Contains 285A,652A,889A,584A,248A,614A, 246A,594AA,580A,867A,578A)(#584A Has A 62 Teeth Ring Gear & No Bushing Inside)	1	
41583B	Planet Kit, F4A51/W4A51(W4A5A) Non Sprag Type (38 Teeth #614B)(25 Teeth #578B) (Contains: 584B,348A,614B,246B,594B,580B,867B,578B)	1	
41583BB	Planet Kit, F4A51/W4A51(W4A5A) Sprag Type (38 Teeth #614B)(25 Teeth #578B) (Contains: 285B,652B,889B,584B,248B,614B,246B,594BA,580B,867B,578B)	1	
41583BF	Planet Kit, F4A51/W4A51(W4A5A) Sprag Type (Contains: 285B,652B,889B,584BA,248B,614B, 246B,594BA,580BA,867B,578BA)	1	
41583BG	Planet Kit, F4A51/W4A51(W4A5A) Sprag Type (Contains: 285B,652B,889B,584B,248B,614B, 246B,594BA,580BA,867B,578BA)	1	
41583C	Planet Kit, F5A51 Sprag Type (42 Teeth #614C))(25Teeth #578B)(Contains: 285B,652B, 889B,584C,248B,614C,246B,594BA,580B,867B,578B)	1	
41583CE	Planet Kit, F5A51 Sprag Type (42 Teeth #614C)(31 Teeth #578BA)(Contains: 285B,652B,889B, 584C,248B,614C,246B,594BA,580BA,867B,578BA)	1	
41584A	Planet, F4A41/F4A42/W4A42 Output (Front)(4 Gear)(38 Teeth Sun Gear)(62 Teeth Ring Gear) (38 Splines No Bushing)(4 1/2" Overall Height) 1996-Up	1	45890-39012
41584B	Planet, F4A51/W4A51(W4A5A) Output (Front)(4 Gear)(38 Teeth Sun Gear)(68 Teeth Ring Gear) (34 Splines No Bushing)(5" Overall Height) 1996-Up	1	
41584BA	Planet, F4A51/W4A51(W4A5A) Output (Front)(4 Gear)(38 Teeth Sun Gear)(68 Teeth Ring Gear) (34 Splines W/Bushing)(4 5/8" Overall Height) 1996-Up	1	
41584C	Planet, F5A51/A5HF1 Output (Front)(4 Gear)(42 Teeth Sun Gear) 2001-Up (68 Teeth Ring Gear) (34 Splines No Bushing) 2001-Up	1	45890-39502
41584E	Planet, A4CF1/A4CF2 Output (Front)(4 Gear)(37 Teeth Sun Gear)(W/62 Teeth Ring Gear) 2006-Up	1	45890-23000

© Whatever It Takes Transmission Parts. Inc.

PART #	HARDPARTS (Continued)	QTY	REFERENCE #
41586C	Planet, F5A51 Direct (3 Gear) (21 Teeth Pinions, No Groove)(9 5/8"Long Shaft)(W/30 Teeth Clutch Hub) 2001-Up	1	45710-39506
41586CA	Planet, F5A51 Direct (4 Gear) (21 Teeth Pinions, No Groove)(9 5/8"Long Shaft)(W/30 Teeth Clutch Hub) 2001-Up	1	45710-39507
41586H	Planet, A5HF1 Direct (3 Gear)(21 Teeth Pinions, 1 Groove)(9 5/8" Long Shaft)(W/30 Teeth Clutch Hub) 2006-Up	1	
41594A	Ring Gear, F4A41 Output Planet (Non Sprag Type)(70 Teeth)(2.980" Long) 1996-Up	1	45796-39010
41594AA	Ring Gear, F4A41/F4A42/W4A42 Output Planet (Sprag Type)(70 Teeth)(3.395" Long) 1996-Up	1	
41594B	Ring Gear, F4A51/W4A51(W4A5A) Output Planet (Non Sprag Type)(70 Teeth)(3.215"Long) 1996-Up	1	
41594BA	Ring Gear, F4A51/W4A51(W4A5A)/F5A51/A5HF1 Output Planet (Sprag Type)(70 Teeth) (3.660"Long) 1996-Up	1	45796-39510
41594E	Ring Gear, A4CF1/A4CF2 Output Planet (Sprag Type)(71 Teeth)(3.420"Long)(30 Outer Lugs) 2006-Up	1	45796-23000
41614A	Sun Gear, F4A41/F4A42/W4A42 Output (38 Teeth)(3.550" Long)(2.180" OD) 1996-Up	1	45793-39000
41614B	Sun Gear, F4A51/W4A51(W4A5A) Output (38 Teeth)(3.840"Long)(2.700"OD) 1996-Up	1	
41614C	Sun Gear, F5A51/A5HF1 Output (42 Teeth)(3.840" Long)(2.910" OD) 2001-Up	1	45793-39500
41614E	Sun Gear, A4CF1/A4CF2 Output Planet (37 Teeth, No Groove) 2006-Up	1	45793-23000
41652A	Sprag W/End Caps, F4A41/F4A42/W4A42 Low (28 Lugs)(.445" Thick)(3.635"ID Of End Caps) 1996-Up	1	
41652AB	Sprag W/End Caps, F4A41/F4A42/W4A42 Low (28 Lugs)(.445" Thick)(3.539"ID Of End Caps) 1996-Up	1	
41652B	Sprag W/End Caps, F4A51/W4A51(W4A5A)/F5A51/A5HF1 Low (32 Lugs)(.455"Thick) 1996-Up	1	
41652E	Sprag W/End Caps, A4CF1/A4CF2 Low (32 Lugs)(.492"Thick) 2006-Up	1	45689-23400
41654C	Sprag W/End Caps, F5A51/A5HF1 Rear (32 Lugs)(.475" Thick) 2001-Up	1	45783-39502
41662A	Inner Race, F4A41/F4A42/W4A42 Low Sprag (.770"Thick)(3.630"OD) 1996-98 (Without O-Ring Groove)	1	
41662AA	Inner Race, F4A41/F4A42/W4A42 Low Sprag (.770"Thick)(3.630"OD) 1999-Up (With O-Ring Groove)	1	
41662AB	Inner Race, F4A41/F4A42/W4A42 Low Sprag (.770"Thick)(3.535"OD) 1999-Up (W/O-Ring Groove)	1	
41662B	Inner Race, F4A51/W4A51(W4A5A)/F5A51 Low Sprag (.625"Thick)(4.375"OD)(Without O-Ring Groove) 1996-98	1	
41662BA	Inner Race, F4A51/W4A51(W4A5A)/F5A51 Low Sprag (.625"Thick)(4.375"OD)(With O-Ring Groove) 1999-Up	1	
41662E	Inner Race, A4CF1/A4CF2 Low Sprag (.683"Thick)(4.067"OD)(Splines Onto Case) 2006-Up	1	45681-23400
41662H	Inner Race, A5HF1 Low Sprag (.625" Thick)(4.375"OD)(3.453"ID) 2006-Up	1	
41665C	Outer Race, F5A51/A5HF1 Rear Sprag (15 Outer Lugs)(.550" Thick)(3.910"OD) 2001-Up	1	45781-39501
41670A	Shaft, F4A41/F4A42/W4A42 Input (13 15/16" Long) 1996-Up	1	45753-39000
41670B	Shaft, F4A51/W4A51(W4A5A) Input (15 1/8"Long)(W/3 Holes .115"ID & W/2 Holes .076"ID) 1996-Up (Can Use 41670C)	1	
41670C	Shaft, F5A51 Input (15 1/8" Long)(W/4 Holes .115" ID)(W/1 Hole .076" ID)(17 Rear Splines) 2001-Up	1	45753-39530
41670E	Shaft, A4CF1/A4CF2 Input (13 1/8"Long) 2006-Up	1	45753-23000
41670H	Shaft, A5HF1 Input (15 1/8" Long)(W/4 Holes .115"ID & One Hole .076"ID)(18 Rear Splines) 2006-Up	1	
41690C	Park Gear, F5A51 (18 Lugs)(27 Splines)(.345" Thick) 2001-Up	1	45732-39500
41690H	Park Gear, A5HF1 (18 Lugs)(27 Splines)(.450"Thick) 2006-Up	1	
41695C	Retainer, F5A51/A5HF1 Rear Sprag (Both Sides)(.025" Thick)(4.375"OD)(6 Legs) 2001-Up	1	45757-39510
41696A	Cone Sleeve, F4A41/F4A42/W4A42 Pinion (2.625" Long) 1996-Up	1	43724-39001
41696B	Cone Sleeve, F4A51/W4A51(W4A5A) Pinion (2.425"Long) 1996-Up	1	
41698E	Oil Baffle, A4CF1/A4CF2 Differential (3 Bolt, Tin) 2006-Up	1	21474-23000
41699E	Oil Baffle, A4CF1/A4CF2 (1 Bolt, Tin)(Bolts To Case By Axle Seal) 2006-Up	1	45253-23000
41710A	Gear, F4A41/42/W4A42 Drive Transfer (42 Teeth)(5.055" OD) 1996-Up	1	45811-39011
41710AA	Gear, F4A41/F4A42/W4A42 Drive Transfer (49 Teeth(5.713"OD) 1996-Up	1	
41710AB	Gear, F4A41/42 Drive Transfer (67 Teeth)(4.920" OD) 1996-Up	1	
41710B	Gear, F4A51 Drive Transfer (70 Teeth)(5.595" OD) 1996-Up	1	
41710BC	Gear, W4A51(W4A5A) Drive Transfer (49 Teeth)(5.725"OD) 2001-Up	1	
41710C	Gear, F5A51 Drive Transfer (75 Teeth, 1 Groove)(2.495" Thick)(6.290" OD) 2001-Up	1	45811-39500
41710E	Gear, A4CF1/A4CF2 Drive Transfer (67 Teeth)(5.105"OD) 2006-Up	1	45811-23000
41710H	Gear, A5HF1 Drive Transfer (75 Teeth, 2 Groove)(2.620" Thick)(6.290"OD) 2006-Up	1	
41711A	Retainer, F4A41/F4A42/W4A42 Drive Transfer Gear (7 Bolt) 1996-Up (1.680" Thick)	1	
41711B	Retainer, F4A51 Drive Transfer Gear (4 Bolt) 1996-Up (1.065" Thick)	1	
41711BA	Retainer, F4A51/F5A51 Drive Transfer Gear (8 Bolt)(1.800" Thick)(4.600"OD) 1996-Up	1	
41711E	Retainer, A4CF1/A4CF2 Drive Transfer Gear (8 Bolt)(1.168"Thick)(W/Outer Races) 2006-Up	1	
41711H	Retainer, A5HF1 Drive Transfer Gear (8 Bolt)(1.820" Thick)(4.800"OD) 2006-Up	1	
41712A	Gear, F4A41/F4A42/W4A42 Driven Transfer (47 Teeth)(No Groove) 1996-Up	1	45721-39011
41712AA	Gear, F4A41/F4A42/W4A42 Driven Transfer (75 Teeth)(No Groove) 1996-Up	1	

© Whatever It Takes Transmission Parts. Inc.

41712AB.....Gear, F4A41/F4A42/W4A42 Driven Transfer (75 Teeth)(1 Groove) 1996-Up.....1 .....
41712B .....Gear, F4A51 Driven Transfer (83 Teeth)(No Groove) 1996-Up .....1 .....
41712BC.....Gear, W4A51(W4A5A) Driven Transfer (58 Teeth, No Groove) 2001-Up .....1 .....
41712C .....Gear, F5A51 Driven Transfer (89 Teeth)(No Groove)(W/Planet Ring Gear)(W/2 Cup Races .....# 280 & Snap Ring # 899) 2001-Up 1 45721-39500
41712CJ .....Gear, F5A51 Driven Transfer (108 Teeth, 1 Groove)(W/Planet Ring Gear)(W/2 Cup Races .....# 280 & Snap Ring # 899) 2001-Up .....1 .....
41712E .....Gear, A4CF1/A4CF2 Driven Transfer (70 Teeth, No Groove)(W/15 Lugs) 2006-Up.....1 45721-23000
41712H.....Gear, A5HF1 Driven Transfer (108 Teeth, 2 Groove)(W/Planet Ring Gear)(With 2 Cup Races .....#280 & Snap Ring #899) 2006-Up .....1 .....
41715A .....Differential Assembly, F4A41/F4A42 (65 Teeth Ring Gear)(Ball Bearings)(36 Teeth Speed-O) .....(8 Bolt) 1996-Up .....1 .....
41715AA.....Differential Assembly, F4A41/F4A42 (65 Teeth Ring Gear, 1 Groove)(20 Roller Tapered Bearing) .....(36 Teeth Speed-O Gear)(1.125” ID Axle Hub)(8 Bolt) 1996-Up.....1 .....
41715AA-1.....Differential Assembly, F4A41/F4A42 (65 Teeth Ring Gear, 1 Groove)(20 Roller Tapered Bearing) .....(No Speed-O Gear)(1.125” ID Axle Hub)(8 Bolt) 1996-Up.....1 .....
41715AAA.....Differential Assembly, F4A41/F4A42 (65 Teeth Ring Gear, No Groove)(17 Roller Tapered .....Bearing)(36 Teeth Speed-O Gear)(1.043” ID Axle Hub)(8 Bolt) 1996-Up .....1 .....
41715AAA-1 ...Differential Assembly, F4A41/F4A42 (65 Teeth Ring Gear, 3 Groove)(17 Roller Tapered Bearing) .....(36 Teeth Speed-O Gear)(1.043” ID Axle Hub)(8 Bolt) 1996-Up.....1 .....
41715AAB .....Differential Assembly, F4A41/F4A42 (63 Teeth Ring Gear, 3 Groove)(Tapered Bearing)(36 Teeth .....Speed-O Gear)(8 Bolt) 1996-Up .....1 .....
41715AAC .....Differential Assembly, F4A41/F4A42 (64 Teeth Ring Gear, 3 Groove)(Tapered Bearing)(36 Teeth .....Speed-O Gear)(8 Bolt)(1.043”ID Axle Hole) 1996-Up.....1 .....
41715AACA....Differential Assembly, F4A41/F4A42 (64 Teeth Ring Gear, 3 Groove)(Tapered Bearing)(36 Teeth .....Speed-O Gear)(8 Bolt)(1.097”ID Axle Hole) 1996-Up.....1 .....
41715AAD .....Differential Assembly, F4A41/F4A42 (64 Teeth Ring Gear, 3 Groove)(Tapered Bearing)(36 Teeth .....Speed-O Gear)(8 Bolt)(1.250” ID Axle Hole) 1996-Up (The 3 Grooves Have 2 Grooves Side By .....Side & 1 By Its Self) .....1 .....
41715AADA....Differential Assembly, F4A41/F4A42 (64 Teeth Ring Gear, 3 Groove)(Tapered Bearing)(36 Teeth .....Speed-O Gear)(8 Bolt)(1.113”ID Axle Hole) 1996-Up (The 3 Grooves Have 2 Grooves Side By .....Side & 1 By Its Self) .....1 .....
41715AADB....Differential Assembly, F4A41/F4A42 (64 Teeth Ring Gear, 2 Groove)(Tapered Bearing)(36 Teeth .....Speed-O Gear)(8 Bolt)(1.109”ID Axle Hole) 1996-Up.....1 .....
41715AADC....Differential Assembly, F4A41/F4A42 (64 Teeth Ring Gear, 2 Groove)(Tapered Bearing) .....(No Speed-O Gear)(8 Bolt) 1996-Up .....1 .....
41715AAE .....Differential Assembly, F4A41/F4A42 (64 Teeth Ring Gear, 1 Groove)(20 Roller Tapered Bearing) .....(No Speed-O Gear)(8 Bolt) 1996-Up .....1 .....
41715AB.....Differential Assembly, W4A42 (62 Teeth Ring Gear, 2 Groove)(Tapered Bearing)(36 Teeth Plastic .....Speed-O Gear)(10 Bolt) 2001-Up .....1 .....
41715AC.....Differential Assembly, F4A41/F4A42 (62 Teeth Ring Gear, No Groove)(20 Roller Tapered .....Bearing)(36 Teeth Plastic Speed-O Gear)(8 Bolt) 1996-Up .....1 .....
41715ACA .....Differential Assembly, F4A41/F4A42 (62 Teeth Ring Gear, No Groove)(20 Roller Tapered .....Bearing)(36 Teeth Metal Speed-O Gear)(8 Bolt) 1996-Up.....1 .....
41715AE.....Differential Assembly, F4A41/F4A42 (56 Teeth Ring Gear, No Groove)(17 Roller Tapered .....Bearing)(No Speed-O Gear)(1.043”ID Axle Hub)(8 Bolt) 1996-Up .....1 .....
41715AG .....Differential Assembly, F4A41/F4A42 (69 Teth Ring Gear, 1 Groove On Ring Gear Side)(Ball .....Bearing)(36 Teeth Speed-O Gear)(1.043”ID Axle Hub)(8 Bolt) 1996-Up .....1 .....
41715AM .....Differential Assembly, F4A41/F4A42 (74 Teeth Ring Gear, No Groove)(Ball Bearing)(36 Teeth .....Speed-O Gear)(1.043”ID Axle Hub)(8 Bolt) 1996-Up.....1 .....
41715B .....Differential Assembly, F4A51 (59 Teeth Ring Gear, No Groove)(Tapered Bearing)(36 Teeth .....Speed-O Gear)(8 Bolt) 1996-Up .....1 .....
41715B-5 .....Shaft, W4A51(W4A5A) AWD (Splines Into The Differential, Drives The Transfer Case)(6 1/8”Long .....Hollow Shaft)(1.830”OD, 43 Splines On Each End) 2001-Up.....1 47344-39010
41715BA.....Differential Assembly, F4A51 (59 Teeth Ring Gear, No Groove)(Tapered Bearing)(No Speed-O .....Gear)(8 Bolt) 1996-Up.....1 .....
41715BB.....Differential Assembly, F4A51 (63 Teeth Ring Gear, 1 Groove)(20 Roller Tapered Bearing) .....(No Speed-O Gear)(8 Bolt) 1996-Up .....1 .....
41715BC.....Differential Assembly, F4A51 (63 Teeth Ring Gear, 1 Groove)(20 Roller Tapered Bearing) .....(36 Teeth Speed-O Gear)(8 Bolt) 1996-Up .....1 .....
41715BD.....Differential Assembly, F4A41/F4A42 (63 Teeth Ring Gear, 2 Groove)(17 Roller Tapered Bearing) .....(36 Teeth Speed-O Gear)(8 Bolt) 1996-Up .....1 .....
41715BE.....Differential Assembly, F4A51 (63 Teeth Ring Gear, 2 Groove)(23 Roller Tapered Bearing) .....(No Speed-O Gear)(10 Bolt) 1996-Up .....1 .....
41715C .....Differential Assembly, F5A51 (59 Teeth Ring Gear, No Groove)(Tapered Bearing)(36 Teeth .....Speed-O Gear)(10 Bolt) 2001-Up .....1 .....
41715CA.....Differential Assembly, F5A51 (59 Teeth Ring Gear, 1 Groove)(Tapered Bearing)(36 Teeth .....Speed-O Gear)(10 Bolt) 2001-Up .....1 .....
41715D .....Differential Assembly, W4A51 (AWD)(61 Teeth Ring Gear, 2 Groove)(29 Teeth Roller Tapered .....Bearing By Speed-O)(36 Teeth Speed-O Gear)(16 Bolt) 2001-Up .....1 .....

© Whatever It Takes Transmission Parts. Inc.

PART #	HARDPARTS (Continued)	QTY	REFERENCE #
41715DA	Differential Assembly, W4A51(W4A5A)(62 Teeth Ring Gear, No Groove)(34 Roller Cone Bearing By Speed-O)(36 Teeth Speed-O Gear)(10 Bolt) 2001-Up	1	
41715E	Differential Assembly, A4CF1/A4CF2 (70 Teeth, 1 Groove Ring Gear)(20 Roller Tapered Bearing) No Speed-O Gear)(1.125"ID Axle Hub)(10 Bolt) 2006-Up	1	
41715H	Differential Assembly, A5HF1 (59 Teeth Ring Gear, 1 Groove)(24 Roller Bearings)(36 Teeth Speed-O Gear)(10 Bolt) 2006-Up	1	
41716A	Differential Housing, F4A41/F4A42 (8 Bolt)(Ball Bearings)(36 Teeth Speed-O) 1996-Up	1	
41716AA	Differential Housing, F4A41/F4A42/F4A51 (8 Bolt)(20 Roller Tapered Bearing)(36 Teeth Speed-O Gear)(1.125" ID Axle Hub) 1996-Up	1	
41716AAA	Differential Housing, F4A41/F4A42 (8 Bolt)(17 Roller Tapered Bearing)(36 Teeth Speed-O Gear)(1.043" ID Axle Hub) 1996-Up	1	
41716AB	Differential Housing, W4A42 (10 Bolt)(Tapered Bearings)(36 Teeth Plastic Speed-O Gear) 2001-Up	1	
41716C	Differential Housing, F5A51 (10 Bolt)(23 Roller Bearings)(36 Teeth Metal Speed-O) 2001-Up	1	
41716E	Differential Housing, A4CF1/A4CF2 (10 Bolt)(20 Roller Tapered Bearings)(1.125"ID Axle Hub) 2006-Up	1	45822-23400
41716H	Differential Housing, A5HF1 (10 Bolt)(24 Roller Bearings)(36 Teeth Metal Speed-O) 2006-Up	1	
41730A	Pinion, F4A41/F4A42 (18 Teeth)(1 Groove)(8 1/4" Long) 1996-Up	1	
41730AA	Pinion, F4A41/F4A42 (19 Teeth)(1 Groove)(8 1/4" Long) 1996-Up	1	
41730AB	Pinion, W4A42 (15 Teeth)(2 Groove)(8 1/4" Long) 2001-Up	1	
41730BA	Pinion, F4A51 (21 Teeth, 1 Groove)(8 1/2" Long) 1996-Up	1	
41730BC	Pinion, F4A51 (20 Teeth, 2 Groove)(8 1/2" Long) 1996-Up	1	
41730C	Pinion, F5A51 (21 Teeth, No Groove)(3" Long) 2001-Up	1	45723-39510
41730D	Pinion, W4A51 (AWD)(21 Teeth, 2 Groove)(8 1/2" Long) 2001-Up	1	
41730DA	Pinion, W4A51(W4A5A)(17 Teeth, 1 Groove)(8 1/2" Long) 2001-Up	1	
41730E	Pinion, A4CF1/A4CF2 (19 Teeth, 1 Groove)(4.736"Long) 2006-Up	1	45722-23000
41730H	Pinion, A5HF1 (21 Teeth, 1 Groove)(3" Long) 2006-Up	1	
41735A	Housing, F4A41/42 Pinion (4 Bolt)(Aluminum)(9 Spokes) 1996-Up	1	45273-39001
41735AB	Housing, W4A42 Pinion (4 Bolt)(Aluminum)(15 Spokes) 2001-Up	1	
41735B	Housing, F4A51/W4A51(W4A5A)(4 Bolt Aluminum)(10 Spokes) 1996-Up	1	
41736A	Cover, F4A41/F4A42/F4A51/W4A42/W4A51 (W4A5A) Pinion Nut (Bonded)(2.255"OD) 1996-Up	1	45271-39010
41740A	Valve Body, F4A41/F4A42/W4A42 (5 Solenoids W/Plastic Snouts) 1996-10/04	1	
41740AA	Valve Body, F4A41/F4A42/F4A51/W4A42/W4A51 (W4A5A)(5 Solenoids W/Metal Snouts) 1996-10/04	1	
41740C	Valve Body, F5A51 (6 Solenoids) 2001-10/04 (All 6 Solenoids Are The Same)	1	
41740CA	Valve Body, F5A51 (6 Solenoids) 11/2004-Up (5 Solenoids Are The Same, The EPC Solenoid Is Different)	1	
41740CB	Valve Body, F5A51/A5GF1/A5HF1 (7 Solenoids)(6 Solenoids Are The Same, The EPC Solenoid Is Different)	1	
41740E	Valve Body, A4CF1/A4CF2 (6 Solenoids) (Cast # 23V06C03N009 On Upper Section) 2006-Up	1	

PART #	VALVE BODY COMPONENTS	QTY	REFERENCE #
S41741CK	Valve & Sleeve Kit, F4A41/F4A42/F4A51/W4A42/F5A51 TCC Control (Sonnax) 1996-Up	1	
S41741DK	Valve & Sleeve Kit, F4A41/F4A42/F4A51/W4A42/F5A51 Overdrive Pressure Control & 2nd Pressure Control (Contains: 1 Valve & 1 Sleeve)(Sonnax)	1	
S41741EUAK	Valve Kit, A4CF1/A4CF2 Low/Reverse Pressure Control & 2-4 Brake Pressure Control & Underdrive Pressure Control (Oversize) (Contains: 1 Valve, 1 End Plug & 2 O-Rings) (This Kit Fits In 3 Locations)(Sonnax)(Must Use Tool T-F-84741-TL16)	1	
T-F-84741-TL16	Tool Kit For S41741EUAK	1	
S41741EWAK	Valve Kit, A4CF1/A4CF2 Damper Clutch Control (Oversize)(Contains: Valve, Sleeve, and O-Rings)(Sonnax)(Must Use Tool Kit T-F-84741-TL13)	1	
T-F-84741-TL13	Tool Kit For S41741EWAK	1	
S84741EAAK	Valve & Sleeve Kit, A4CF1/A4CF2 Pressure Reducing Valve (Oversize)(Contains: Valve, Sleeve, Clip, & Spring)(Must Use T-F-84741-TL10)	1	
T-F-84741-TL10	Tool Kit S41741EAAK	1	
S41741ECK	Valve & Sleeve Kit, A4CF1/A4CF2 TCC Regulator (Contains: Valve, Sleeve & Spring) 2006-Up (Sonnax)	1	
S41741EPAK	Valve & Sleeve Kit, A4CF1/A4CF2 Pressure Regulator (Oversize)(Contains: Pressure Valve, Pressure Spring, Balance Valve & Sleeve) 2006-Up (Sonnax)(Must Use Reamer T-84741-TL3)	1	
T-84741-TL3	Reamer For S41741EPAK	1	
S41741ETK	Valve & Sleeve Kit, A4CF1/A4CF2 Boost Valve (Contains: Valve & Sleeve) 2006-Up (Sonnax)	1	
S41741PA	Valve, F4A41/F4A42/F4A51/W4A42/F5A51 Pressure Regulator (Oversize)(Sonnax)(Must Use Tool T-F-41954-TL)	1	
S41741UK	Valve & Sleeve Kit, F4A41/F4A42/F4A51/W4A42/F5A51 Underdrive Pressure Control & Low/Reverse Pressure Control)(W/Orifice)(Contains: 1 Valve & 1 Sleeve) 1996-Up (Sonnax)	1	
T-41005-TL	Pump Alignment Tool, F4A41/F4A42/F4A51/W4A42/W4A51(W4A5A)/F5A51 1996-Up (Sonnax)	1	

© Whatever It Takes Transmission Parts. Inc.

T-F-41954-TL..Reamer For S41741PA ..... 1 .....

PART #	HARDPARTS (Continued)	QTY	REFERENCE #
41750A	Bell Housing, F4A41 (3 1/2" Top Bolts)(Starter At 4:00)(Cast #F4A42 Below Speed-O) 1996-Up	1	
41750AC	Bell Housing, F4A42 (4 1/2" Top Bolts)(Double Starter At 5:00 & 11:00)(Cast # MD756902 Below Speed-O) 1996-Up	1	45231-39601
41750AE	Bell Housing, F4A41/F4A42 (4 1/4" Top Bolts)(Starter At 1:00)(Cast# MD760815 Below Speed-O) 1996-Up	1	
41750AF	Bell Housing, W4A42 (AWD)(4 1/4" Top Bolts)(Starter At 1:00)(Cast # MD762647 Below Speed-O) 1997-Up	1	
41750AL	Bell Housing, F4A41/F4A42 (5 1/8" Top Bolts)(Starter At 11:00)(Cast # F4A42 39600 On Bottom Of Bell)	1	
41750B	Bell Housing, F4A51 (3 1/2" Top Bolts)(Starter At 4:00)(Cast #MD759244 Below Speed-O) 1996-Up	1	
41750BA	Bell Housing, W4A51 (AWD)(3 1/2" Top Bolts)(Starter At 4:00)(Cast # F4A51 Below Speed-O) (W/2.880" ID Axle Seal Hole) 2001-Up	1	
41750BB	Bell Housing, F4A51 (3 1/2" Top Bolts)(Starter At 4:00)(Cast #500278 By The Seal)	1	
41750BC	Bell Housing, W4A51 (W4A5A)(3 1/2" Top Bolts)(Starter At 4:00)(W/3.495"ID Axle Seal Hole) 2001-Up (6 Bolt Holes For Torque Converter)	1	
41750C	Bell Housing, F5A51 (3 1/2" Top Bolts)(Starter At 4:00)(Cast #F5A51 Below Speed-O Hole) 2001-Up	1	
41750CA	Bell Housing, F5A51 (3 1/2" Top Bolts)(Starter At 4:00)(No Cast #)(No Speed-O Hole) 2001-Up	1	
41750E	Bell Housing, A4CF1/A4CF2 (5 1/8" Top Bolts)(Starter At 10:00) 2006-Up	1	45231-23501
41750H	Bell Housing, A5HF1 (Starter At 3:00)(Cast # A5HF1)(3 Bosses By Starter) 2006-Up	1	
41759AC	Rear Cover, F4A41/F4A42/W4A42 (12 Bolt)(Cast # F4A42 Or 39001) 1996-Up	1	
41759AD	Rear Cover, F4A41/F4A42/W4A42 (10 Bolt)(Cast # F4A42 Or 500737) 1996-Up	1	
41759B	Rear Cover, F4A51/W4A51(W4A5A) (10 Bolt)(Cast # F4A51 Or 500766) 1996-Up	1	
41759BB	Rear Cover, F4A51/W4A51(W4A5A) (12 Bolt)(Cast # 39303) 1996-Up	1	
41759C	Rear Cover, F5A51 (14 Bolt)(Cast # F5A51 Or 39501) 2001-Up	1	
41759CA	Rear Cover, F5A51 (11 Bolt) (Cast # 500743) 2001-Up	1	
41759E	Rear Cover, A4CF1/A4CF2 (9 Bolt)(Cast # KIA) 2006-Up	1	45320-23000
41759H	Rear Cover, A5HF1 (14 Bolt)(Cast # A5HF1) 2006-Up	1	
41760A	Case, F4A41/F4A42 (10 Bolt Rear Cover)(Spin-On Filter) 1996-Up	1	
41760AA	Case, F4A41/F4A42 (10 Bolt Rear Cover)(No Spin-On Filter) 1996-Up	1	
41760AB	Case, F4A41/F4A42 (12 Bolt Rear Cover)(No Spin-On Filter) 1996-Up	1	
41760ABA	Case, F4A41/F4A42 (12 Bolt Rear Cover)(Spin-On Filter) 1996-Up	1	
41760AC	Case, W4A42 (10 Bolt Rear Cover)(No Spin-On Filter)(Vented On Top) 2001-Up	1	
41760B	Case, F4A51 (10 Bolt Rear Cover)(Spin-On Filter) 1996-Up (Rear Drain Plug)(Uses A 4 Bolt Retainer # 711)	1	
41760BA	Case, F4A51 (10 Bolt Rear Cover)(No Spin-On Filter) 1996-Up (Bottom Drain Plug)(Uses A 8 Bolt Retainer # 711)(W/2.400"ID Axle Seal Hole)	1	
41760BC	Case, W4A51 (W4A5A)(10 Bolt Rear Cover)(Uses A 8 Bolt Retainer # 711)(W/2.880"ID Axle Seal Hole) 2001-Up	1	
41760C	Case, F5A51 (14 Bolt Rear Cover)(No Vent On Top)(Cast # F5A51)(2"OD Servo Cover) 2001-Up	1	
41760CA	Case, F5A51 (11 Bolt Rear Cover)(Vented On Top) 2001-Up	1	
41760E	Case, A4CF1/A4CF2 (Cast # A4CF1.2 K-4)(Tag # KNAFE1216KIA) 2006-Up	1	
41760H	Case, A5HF1 (14 Bolt Rear Cover)(Cast # A5HF1)(2 3/8"OD Servo Cover) 2006-Up	1	
41765E	Pan, A4CF1/A4CF2 Bottom (19 Bolt)(1 1/4" Deep In Center) 2006-Up	1	45280-23001
41766A	Pan, F4A41/F4A42 Side (1 7/8" Dipstick Tube) 1996-Up	1	45283-39650
41766AB	Pan, W4A42 Side (3 1/2" Dipstick Tube) 2001-Up	1	
41766B	Pan, F4A51/W4A51 (W4A5A) Side (1" Tall Dipstick Tube) 1996-Up	1	
41766BA	Pan, F4A51/W4A51 (W4A5A) Side (3 1/2" Tall Dipstick Tube) 1996-Up	1	
41766C	Pan, F5A51 Side (2 1/8" Tall Dipstick Tube) 2001-Up	1	45283-39500
41766H	Pan, A5HF1 Side (3 1/2" Tall Dipstick Tube) 2006-Up	1	
41774	Speed-O Housing, F4A41/F4A42/F4A51/W4A42/W4A51 (W4A5A)/F5A51 (25 Teeth Green Gear)(3 Prong Connector) 1996-Up	1	
41774-1	Speed-O Housing, F4A41/F4A42/F4A51/W4A42/W4A51 (W4A5A)/F5A51 (26 Teeth Blue Gear) (3 Prong Connector) 1996-Up	1	
41774A	Speed-O Housing, F4A41/F4A42/F4A51/W4A42/W4A51(W4A5A)/F5A51 (27 Teeth Black Gear) (3 Prong Connector) 1996-Up	1	
41774AA	Speed-O Housing, F4A41/F4A42/F4A51/W4A42/W4A51(W4A5A)/F5A51 (28 Teeth Beige Gear) (3 Prong Connector) 1996-Up	1	
41774AB	Speed-O Housing, F4A51/F4A42/F4A51/W4A42/W4A51(W4A5A)/F5A51 (29 Teeth Gear) (3 Prong Connector) 1996-up	1	
41774AC	Speed-O Housing, F4A41/F4A42/F4A51/W4A42/W4A51(W4A5A)/F5A51 (30 Teeth Red Gear) (3 Prong Connector) 1996-up	1	

© Whatever It Takes Transmission Parts. Inc.

PART #	HARDPARTS (Continued)	QTY	REFERENCE #
41774AD	Speed-O Housing, F4A41/F4A42/F4A51/W4A42/W4A51(W4A5A)/F5A51 (31 Teeth Beige Gear)(3 Prong Connector) 1996-Up	1	
41774AE	Speed-O Housing, F4A41/F4A42/F4A51/W4A42/W4A51(W4A5A)/F5A51 (32 Teeth Gear) (3 Prong Connector) 1996-Up	1	
41776AK	Bolt Set, F4A41/F4A42/W4A42 Bell To Case (18 Pieces) 1996-Up	1	
41776BK	Bolt Set, F4A51/W4A51(W4A5A)/F5A51/A5HF1 Bell To Case (20 Pieces) 1996-Up	1	
41776EK	Bolt Set, A4AF1/A4AF2 Bell To Case (17 Pieces) 2006-Up	1	
41777EK	Bolt Set, A4CF1/A4CF2 Stator To Case (7 Pieces) 2006-Up	1	
41778AK	Bolt Set, F4A41/F4A42/F4A51/W4A42/W4A51(W4A5A)/F5A51/A5HF1 Stator To Body 1996-Up (7 Pieces)	1	
41778EK	Bolt Set, A4CF1/A4CF2 Stator To Body (9 Pieces) 2006-Up	1	
41780AK	Bolt Set, F4A41/F4A42/F4A51/W4A42/W4A51(W4A5A) Rear Cover (10 Bolt Type) 1996-Up	1	
41780BK	Bolt Set, F4A41/F4A42/W4A42 Rear Cover (12 Bolt Type) 1996-Up	1	
41780CK	Bolt Set, F5A51/A5HF1 Rear Cover (14 Bolt Type) 2001-Up	1	
41780EK	Bolt Set, A4CF1/A4CF2 Rear Cover To Case (9 Pieces) 2006-Up	1	
41782AK	Bolt Set, F4A41/F4A42/F4A51/W4A42/W4A51(W4A5A)/F5A51 Valve Body To Case (26 Pieces) 1996-Up	1	
41782HK	Bolt Set, A5HF1 Valve Body To Case (26 Pieces) 2006-Up	1	
41786ABK	Bolt Set, W4A42/A5HF1 Ring Gear To Differential Housing 2001-Up (10 Pieces)	1	
41786AK	Bolt Set, F4A41/F4A42/F4A51/W4A51(W4A5A)/F5A51 Ring Gear To Differential Housing 1996-Up (8 Pieces)	1	
41786EK	Bolt Set, A4CF1/A4CF2 Ring Gear To Differential Housing (10 Pieces) 2006-Up	1	
41787AK	Bolt Set, F4A41/F4A42/W4A42 Pinion Housing (4 Pieces) 1996-Up	1	
41787BK	Bolt Set, F4A51/W4A51(W4A5A) Pinion Housing (4 Pieces) 1996-Up	1	
41788AK	Bolt Set, F4A41/F4A42/F4A51/W4A42/W4A51(W4A5A)/F5A51/A5HF1 Side Pan (15 Pieces) 1996-Up	1	
41795A	Nut, F4A41/F4A42/W4A42 Drive Transfer Gear (4 Notches)(2.640”OD) 1996-Up (Also Fits A4CF1/A4CF2 2006-Up)	1	45819-39010
41795B	Nut, F4A51/W4A51(W4A5A) Drive Transfer Gear (6 Point Hex Head)(2.755”OD) 1996-Up	1	
41795BA	Nut, F4A51/W4A51(W4A5A)/F5A51/A5HF1 Drive Transfer Gear (4 Notches)(2.755”OD) 1996-Up	1	45819-39510
41796A	Nut, F4A41/F4A42/F4A51/W4A42/W4A51 (W4A5A) Pinion (1.120”ID)(40mm) 1996-Up	1	45729-39000
41796C	Nut, F5A51/A5HF1 Pinion (1.360” ID)(50mm) 2001-Up	1	45729-39800
41799E	Nut, A4CF1/A4CF2 Manual Shaft (Internal) 2006-Up	1	13395-10001
41843E	Bracket, A4CF1/A4CF2 Holds Solenoids To Valve Body (4 Bolt)(4 7/8”Long) 2006-Up	1	46343-23010
41847AB	Gear, W4A42 Speed-O Drive (36 Teeth)(Plastic)(On Differential Housing) 2001-Up	1	
41857A	Wavy Ring, F4A41/F4A42/W4A42 Low/Reverse Clutch (This Is A Spiral Type)(5.765” OD) 1996-Up (Use The Solid Ring # 41857AA)	1	45655-39000
41857AA	Wavy Ring, F4A41/F4A42/W4A42 Low/Reverse Clutch (This Is The Solid Ring)(5.820” OD) 1996-Up	1	
41857B	Wavy Ring, F4A51/W4A51(W4A5A)/F5A51 Low/Reverse Clutch (This Is A Spiral Type) (6 13/16”OD)(Use The Solid Ring # D41857BA)	1	
41857BA	Wavy Ring, F4A51/W4A51(W4A5A)/F5A51/A5HF1 Low/Reverese Clutch (This Is The Solid Ring) (6 13/16”OD) 1996-Up	1	
41857E	Wavy Ring, A4CF1/A4CF2 Low/Reverse Clutch (This Is A Solid Ring)(.085”Thick)(5.900”OD) 2006-Up	1	
41861AA	Snap Ring, F4A41/F4A42/W4A42 Holds Overdrive Pressure Plate In (.063”) 1996-Up (Also Fits F4A41/F4A42/W4A42 Underdrive Clutch #864)	1-2	45427-39160
41861AB	Snap Ring, F4A41/F4A42/W4A42 Holds Overdrive Pressure Plate In (.067”) 1996-Up (Also Fits F4A41/F4A42/W4A42 Underdrive Clutch #864)	1-2	45427-39170
41861AC	Snap Ring, F4A41/F4A42/W4A42 Holds Overdrive Pressure Plate In (.071”) 1996-Up (Also Fits F4A41/F4A42/W4A42 Underdrive Clutch #864)	1-2	45427-39180
41861AD	Snap Ring, F4A41/F4A42/W4A42 Holds Overdrive Pressure Plate In (.075”) 1996-Up (Also Fits F4A41/F4A42/W4A42 Underdrive Clutch #864)	1-2	45427-39190
41861AE	Snap Ring, F4A41/F4A42/W4A42 Holds Overdrive Pressure Plate In (.079”) 1996-Up (Also Fits F4A41/F4A42/W4A42 Underdrive Clutch #864)	1-2	45427-39200
41861AF	Snap Ring, F4A41/F4A42/W4A42 Holds Overdrive Pressure Plate In (.083”) 1996-Up (Also Fits F4A41/F4A42/W4A42 Underdrive Clutch #864)	1-2	45427-39210
41861AG	Snap Ring, F4A41/F4A42/W4A42 Holds Overdrive Pressure Plate In (.087”) 1996-Up (Also Fits F4A41/F4A42/W4A42 Underdrive Clutch #864)	1-2	45427-39220
41861AH	Snap Ring, F4A41/F4A42/W4A42 Holds Overdrive Pressure Plate In (.091”) 1996-Up (Also Fits F4A41/F4A42/W4A42 Underdrive Clutch #864)	1-2	45427-39230
41861AJ	Snap Ring, F4A41/F4A42/W4A42 Holds Overdrive Pressure Plate In (.094”) 1996-Up (Also Fits F4A41/F4A42/W4A42 Underdrive Clutch #864)	1-2	45427-39240
41861AK	Snap Ring, F4A41/F4A42/W4A42 Holds Overdrive Pressure Plate In (.098”) 1996-Up (Also Fits F4A41/F4A42/W4A42 Underdrive Clutch #864)	1-2	45427-39250
41861AL	Snap Ring, F4A41/F4A42/W4A42 Holds Overdrive Pressure Plate In (.102”) 1996-Up (Also Fits F4A41/F4A42/W4A42 Underdrive Clutch #864)	1-2	45427-39260

© Whatever It Takes Transmission Parts. Inc.

41861AM ..... Snap Ring, F4A41/F4A42/W4A42 Holds Overdrive Pressure Plate In (.106") 1996-Up
..... (Also Fits F4A41/F4A42/W4A42 Underdrive Clutch #864) 1-2 45427-39270
41861AN ..... Snap Ring, F4A41/F4A42/W4A42 Holds Overdrive Pressure Plate In (.110") 1996-Up
..... (Also Fits F4A41/F4A42/W4A42 Underdrive Clutch #864) 1-2 45427-39280
41861AP ..... Snap Ring, F4A41/F4A42/W4A42 Holds Overdrive Pressure Plate In (.114") 1996-Up
..... (Also Fits F4A41/F4A42/W4A42 Underdrive Clutch #864) 1-2 45427-39290
41861AQ ..... Snap Ring, F4A41/F4A42/W4A42 Holds Overdrive Pressure Plate In (.118") 1996-Up
..... (Also Fits F4A41/F4A42/W4A42 Underdrive Clutch #864) 1-2 45427-39300
41861BA ..... Snap Ring, F4A51/W4A51(W4A5A)/F5A51/A5HF1 Holds Overdrive Pressure Plate In (.063")
..... 1996-Up (Also F4A51/W4A51(W4A5A)/F5A51/A6HF1 Underdrive Clutch #864) 1-2 45427-39516
41861BB ..... Snap Ring, F4A51/W4A51(W4A5A)/F5A51/A5HF1 Holds Overdrive Pressure Plate In (.067")
..... 1996-Up (Also F4A51/W4A51(W4A5A)/F5A51/A5HF1 Underdrive Clutch #864) 1-2 45427-39517
41861BC ..... Snap Ring, F4A51/W4A51(W4A5A)/F5A51/A5HF1 Holds Overdrive Pressure Plate In (.071")
..... 1996-Up (Also F4A51/W4A51(W4A5A)/F5A51/A5HF1 Underdrive Clutch #864) 1-2 45427-39518
41861BD ..... Snap Ring, F4A51/W4A51(W4A5A)/F5A51/A5HF1 Holds Overdrive Pressure Plate In (.075")
..... 1996-Up (Also F4A51/W4A51(W4A5A)/F5A51/A5HF1Underdrive Clutch #864) 1-2 45427-39519
41861BE ..... Snap Ring, F4A51/W4A51(W4A5A)/F5A51/A5HF1 Holds Overdrive Pressure Plate In (.079")
..... 1996-Up (Also F4A51/W4A51(W4A5A)/F5A51/A5HF1 Underdrive Clutch #864) 1-2 45427-39520
41861BF ..... Snap Ring, F4A51/W4A51(W4A5A)/F5A51/A5HF1 Holds Overdrive Pressure Plate In (.083")
..... 1996-Up (Also F4A51/W4A51(W4A5A)/F5A51/A5HF1 Underdrive Clutch #864) 1-2 45427-39521
41861BG ..... Snap Ring, F4A51/W4A51(W4A5A)/F5A51/A5HF1 Holds Overdrive Pressure Plate In (.087")
..... 1996-Up (Also F4A51/W4A51(W4A5A)/F5A51/A5HF1 Underdrive Clutch #864) 1-2 45427-39522
41861BH ..... Snap Ring, F4A51/W4A51(W4A5A)/F5A51/A5HF1 Holds Overdrive Pressure Plate In (.091")
..... 1996-Up (Also F4A51/W4A51(W4A5A)/F5A51/A5HF1 Underdrive Clutch #864) 1-2 45427-39523
41861BJ ..... Snap Ring, F4A51/W4A51(W4A5A)/F5A51/A5HF1 Holds Overdrive Pressure Plate In (.094")
..... 1996-Up (Also F4A51/W4A51(W4A5A)/F5A51/A5HF1 Underdrive Clutch #864) 1-2 45427-39524
41861BK ..... Snap Ring, F4A51/W4A51(W4A5A)/F5A51/A5HF1 Holds Overdrive Pressure Plate In (.098")
..... 1996-Up (Also F4A51/W4A51(W4A5A)/F5A51/A5HF1 Underdrive Clutch #864) 1-2 45427-39525
41861BL ..... Snap Ring, F4A51/W4A51(W4A5A)/F5A51/A5HF1 Holds Overdrive Pressure Plate In (.102")
..... 1996-Up (Also F4A51/W4A51(W4A5A)/F5A51/A5HF1 Underdrive Clutch #864) 1-2 45427-39526
41861BM ..... Snap Ring, F4A51/W4A51(W4A5A)/F5A51/A5HF1 Holds Overdrive Pressure Plate In (.106")
..... 1996-Up (Also F4A51/W4A51(W4A5A)/F5A51/A5HF1 Underdrive Clutch #864) 1-2 45427-39527
41861BN ..... Snap Ring, F4A51/W4A51(W4A5A)/F5A51/A5HF1 Holds Overdrive Pressure Plate In (.110")
..... 1996-Up (Also F4A51/W4A51(W4A5A)/F5A51/A5HF1 Underdrive Clutch #864) 1-2 45427-39528
41861BP ..... Snap Ring, F4A51/W4A51(W4A5A)/F5A51/A5HF1 Holds Overdrive Pressure Plate In (.114")
..... 1996-Up (Also F4A51/W4A51(W4A5A)/F5A51/A5HF1 Underdrive Clutch #864) 1-2 45427-39529
41861BQ ..... Snap Ring, F4A51/W4A51(W4A5A)/F5A51/A5HF1 Holds Overdrive Pressure Plate In (.114")
..... 1996-Up (Also F4A51/W4A51(W4A5A)/F5A51/A5HF1 Underdrive Clutch #864) 1-2 45427-39530
41862AA ..... Snap Ring, F4A41/F4A42/F4A51/W4A42/W4A51(W4A5A)/F5A51/A5HF1 Holds Overdrive Clutch
..... Retainer In (.058"Thick)(1.265"OD) 1996-Up (Also Fits A4CF1/A4CF2 2006-Up) 1 45443-39148
41862AB ..... Snap Ring, F4A41/F4A42/F4A51/W4A42/W4A51(W4A5A)/F5A51/A5HF1 Holds Overdrive Clutch
..... Retainer In (.060"Thick)(1.265"OD) 1996-Up (Also Fits A4CF1/A4CF2 2006-Up) 1 45443-39153
41862AC ..... Snap Ring, F4A41/F4A42/F4A51/W4A42/W4A51(W4A5A)/F5A51/A5HF1 Holds Overdrive Clutch
..... Retainer In (.062"Thick)(1.265"OD) 1996-Up (Also Fits A4CF1/A4CF2 2006-Up) 1 45433-39158
41862AD ..... Snap Ring, F4A41/F4A42/F4A51/W4A42/W4A51(W4A5A)/F5A51/A5HF1 Holds Overdrive Clutch
..... Retainer In (.064"Thick)(1.265"OD) 1996-Up (Also Fits A4CF1/A4CF2 2006-Up) 1 45433-39163
41864 ..... Use 41861 ..... 1 .....
41864EA ..... Snap Ring, A4CF1/A4CF2 Holds Underdrive Pressure Plate In (.063"Thick)(6"OD) 2006-Up 1 45432-23160
41864EB ..... Snap Ring, A4CF1/A4CF2 Holds Underdrive Pressure Plate In (.067"Thick)(6"OD) 2006-Up 1 45432-23170
41864EC ..... Snap Ring, A4CF1/A4CF2 Holds Underdrive Pressure Plate In (.071"Thick)(6"OD) 2006-Up 1 45432-23180
41864ED ..... Snap Ring, A4CF1/A4CF2 Holds Underdrive Pressure Plate In (.075"Thick)(6"OD) 2006-Up 1 45432-23190
41864EE ..... Snap Ring, A4CF1/A4CF2 Holds Underdrive Pressure Plate In (.079"Thick)(6"OD) 2006-Up 1 45432-23200
41864EF ..... Snap Ring, A4CF1/A4CF2 Holds Underdrive Pressure Plate In (.083"Thick)(6"OD) 2006-Up 1 45432-23210
41864EG ..... Snap Ring, A4CF1/A4CF2 Holds Underdrive Pressure Plate In (.087"Thick)(6"OD) 2006-Up 1 45432-23220
41864EH ..... Snap Ring, A4CF1/A4CF2 Holds Underdrive Pressure Plate In (.091"Thick)(6"OD) 2006-Up 1 45432-23230
41864EJ ..... Snap Ring, A4CF1/A4CF2 Holds Underdrive Pressure Plate In (.094"Thick)(6"OD) 2006-Up 1 45432-23240
41864EK ..... Snap Ring, A4CF1/A4CF2 Holds Underdrive Pressure Plate In (.098"Thick)(6"OD) 2006-Up 1 45432-23250
41864EL ..... Snap Ring, A4CF1/A4CF2 Holds Underdrive Pressure Plate In (.102"Thick)(6"OD) 2006-Up 1 45432-23260
41864EM ..... Snap Ring, A4CF1/A4CF2 Holds Underdrive Pressure Plate In (.106"Thick)(6"OD) 2006-Up 1 45432-23270
41864EN ..... Snap Ring, A4CF1/A4CF2 Holds Underdrive Pressure Plate In (.110"Thick)(6"OD) 2006-Up 1 45432-23280
41864EP ..... Snap Ring, A4CF1/A4CF2 Holds Underdrive Pressure Plate In (.114"Thick)(6"OD) 2006-Up 1 45432-23290
41864EQ ..... Snap Ring, A4CF1/A4CF2 Holds Underdrive Pressure Plate In (.118"Thick)(6"OD) 2006-Up 1 45432-23300
41865A ..... Snap Ring, F4A41/F4A42/W4A42 Holds Underdrive Clutch Spring Retainer In (1.935" OD)
..... 1996-Up 1 45534-39000
41865B ..... Snap Ring, F4A51/W4A51(W4A5A)/F5A51/A5HF1 Holds Underdrive Clutch Spring Retainer In
..... (2.085"OD) 1996-Up 1 45534-39500
41865E ..... Snap Ring, A4CF1/A4CF2 Holds Underdrive Clutch Spring Retainer In (.060"Thick)(1.315"OD)
..... 2006-Up 1 45443-23000
41867A ..... Snap Ring, F4A41/F4A42/W4A42 Holds Overdrive Planet To Output Ring Gear (.070" Thick)
..... (4 1/4" OD) 1996-Up 1 45751-39000

© Whatever It Takes Transmission Parts. Inc.

PART #	HARDPARTS (Continued)	QTY	REFERENCE #
41867B	Snap Ring, F4A51/W4A51(W4A5A)/F5A51/A5HF1 Holds Overdrive Planet To Output Ring Gear (.078"Thick)(5 1/8"OD) 1996-Up	1	45751-39500
41867E	Snap Ring, A4CF1/A4CF2 Holds Overdrive Planet To Output Ring Gear (.075"Thick)(5.200"OD) 2006-Up	1	45751-23001
41874A	Snap Ring, F4A41/F4A42/W4A42 Holds Piston Housing To Case (.099" Thick)(7 3/16" OD) 1996-Up (Also Fits A4CF1/A4CF2 2006-Up)	1	45664-39000
41874B	Snap Ring, F4A51/W4A51(W4A5A)/F5A51/A5HF1 Holds Piston Housing To Case (.090" Thick) (8 1/16" OD) 1996-Up	1	45664-39500
41878C	Snap Ring, F5A51/A5HF1 Holds Direct Clutch Pressure Plate In Drum (.095" Thick) (5.145" OD) 2001-Up	1	45754-39500
41879C	Snap Ring, F5A51 Holds Direct Clutch Retainer In (.060" Thick)(2.335"OD) 2001-Up	1	45575-39500
41879H	Snap Ring, A5HF1 Holds Direct Clutch Retainer In (.060" Thick)(2.435"OD) 2006-Up	1	
41880A	Snap Ring, F4A41/F4A42/W4A42/A4CF1/A4CF2 Holds Underdrive Drum To Input Shaft (.058" Thick)(1.033" OD) 1996-Up	1	45548-39000
41880B	Snap Ring, F4A51/W4A51(W4A5A)/F5A51/A5HF1 Holds Underdrive Drum To Input Shaft (.056" Thick)(1.255"OD) 1996-Up	1	45548-39500
41883A	Snap Ring, F4A41/F4A42/F4A51/W4A42/W4A51(W4A5A) Holds Low/Reverse Retainer In (.047"Thick)(2.920"OD) 1996-Up	1	45679-39020
41883B	Snap Ring, F4A51/W4A51(W4A5A)/F5A51 Holds Low/Reverse Retainer In (.056"Thick) (3.260"OD) 1996-Up	1	45679-39500
41883E	Snap Ring, A4CF1/A4CF2 Holds Low Sprag Inner Race To Case (.055"Thick)(3.420"OD) 2006-Up	1	47817-39801
41883H	Snap Ring, A5HF1 Holds Low/Reverse Retainer In (.056" Thick)(3.440"OD) 2006-Up	1	
41884A	Snap Ring, F4A41/F4A42/W4A42 Holds Low/Reverse Clutch Steels In Case (.080")(6 7/8" OD) 1996-Up (Also Fits A4CF1/A4CF2 2006-Up)	1	45665-39000
41884B	Snap Ring, F4A51/W4A51(W4A5A)/F5A51/A5HF1 Holds Low/Reverse Clutch Steels In Case (.080")(8 1/16"OD) 1996-Up	1	45665-39500
41885AA	Snap Ring, F4A41/F4A42/W4A42 Holds Low/Reverse Clutch Pressure Plate In (.087")(6 7/8" OD) 1996-Up (Also Fits A4CF1/A4CF2 2006-Up)	1	45667-39220
41885AB	Snap Ring, F4A41/F4A42/W4A42 Holds Low/Reverse Clutch Pressure Plate In (.091")(6 7/8" OD) 1996-Up (Also Fits A4CF1/A4CF2 2006-Up)	1	45667-39320
41885AC	Snap Ring, F4A41/F4A42/W4A42 Holds Low/Reverse Clutch Pressure Plate In (.094")(6 7/8" OD) 1996-Up (Also Fits A4CF1/A4CF2 2006-Up)	1	45667-39240
41885AD	Snap Ring, F4A41/F4A42/W4A42 Holds Low/Reverse Clutch Pressure Plate In (.098")(6 7/8" OD) 1996-Up (Also Fits A4CF1/A4CF2 2006-Up)	1	45667-39250
41885BA	Snap Ring, F4A51/W4A51(W4A5A)/F5A51/A5HF1 Holds Low/Reverse Pressure Plate In (.087") (8 1/16" OD) 1996-Up	1	45667-39522
41885BB	Snap Ring, F4A51/W4A51(W4A5A)/F5A51/A5HF1 Holds Low/Reverse Pressure Plate In (.091") (8 1/16" OD) 1996-Up	1	45667-39523
41885BC	Snap Ring, F4A51/W4A51(W4A5A)/F5A51/A5HF1 Holds Low/Reverse Pressure Plate In (.094") (8 1/16" OD) 1996-Up	1	45667-39524
41885BD	Snap Ring, F4A51/W4A51(W4A5A)/F5A51/A5HF1 Holds Low/Reverse Pressure Plate In (.098") (8 1/16" OD) 1996-Up	1	45667-39525
41889A	Snap Ring, F4A41/42/W4A42 Under Low Sprag In Ring Gear (.079" Thick)(W/2 Eyelets) (4.475" OD) 1996-Up	1	45817-39010
41889B	Snap Ring, F4A51/W4A51(W4A5A)/F5A51 Under Low Sprag In Ring Gear (.079"Thick) (W/2 Eyelets)(5.550"OD) 1996-Up	1	45817-39500
41892AA	Snap Ring, F4A41/F4A42/W4A42 Holds Reverse Clutch In (.063") 1996-Up (Also Fits A4CF1/A4CF2 2006-Up)	1	45432-39160
41892AB	Snap Ring, F4A41/F4A42/W4A42 Holds Reverse Clutch In (.067") 1996-Up (Also Fits A4CF1/A4CF2 2006-Up)	1	45432-39170
41892AC	Snap Ring, F4A41/F4A42/W4A42 Holds Reverse Clutch In (.071") 1996-Up (Also Fits A4CF1/A4CF2 2006-Up)	1	45432-39180
41892AD	Snap Ring, F4A41/F4A42/W4A42 Holds Reverse Clutch In (.075") 1996-Up (Also Fits A4CF1/A4CF2 2006-Up)	1	45432-39190
41892AE	Snap Ring, F4A41/F4A42/W4A42 Holds Reverse Clutch In (.079") 1996-Up (Also Fits A4CF1/A4CF2 2006-Up)	1	45432-39200
41892AF	Snap Ring, F4A41/F4A42/W4A42 Holds Reverse Clutch In (.083") 1996-Up (Also Fits A4CF1/A4CF2 2006-Up)	1	45432-39210
41892AG	Snap Ring, F4A41/F4A42/W4A42 Holds Reverse Clutch In (.087") 1996-Up (Also Fits A4CF1/A4CF2 2006-Up)	1	45432-39220
41892AH	Snap Ring, F4A41/F4A42/W4A42 Holds Reverse Clutch In (.091") 1996-Up (Also Fits A4CF1/A4CF2 2006-Up)	1	45432-39230
41892AJ	Snap Ring, F4A41/F4A42/W4A42 Holds Reverse Clutch In (.094") 1996-Up (Also Fits A4CF1/A4CF2 2006-Up)	1	45432-39240
41892AK	Snap Ring, F4A41/F4A42/W4A42 Holds Reverse Clutch In (.098") 1996-Up (Also Fits A4CF1/A4CF2 2006-Up)	1	45432-39250

© Whatever It Takes Transmission Parts. Inc.

41892AL ..... Snap Ring, F4A41/F4A42/W4A42 Holds Reverse Clutch In (.102") 1996-Up (Also Fits A4CF1/A4CF2 2006-Up) 1 45432-39260
41892AM ..... Snap Ring, F4A41/F4A42/W4A42 Holds Reverse Clutch In (.106") 1996-Up (Also Fits A4CF1/A4CF2 2006-Up) 1 45432-39270
41892AN ..... Snap Ring, F4A41/F4A42/W4A42 Holds Reverse Clutch In (.110") 1996-Up (Also Fits A4CF1/A4CF2 2006-Up) 1 45432-39280
41892BA ..... Snap Ring, F4A51/W4A51(W4A5A)/F5A51/A5HF1 Reverse Clutch (.063") 1996-Up 1 45432-39516
41892BB ..... Snap Ring, F4A51/W4A51(W4A5A)/F5A51/A5HF1 Reverse Clutch (.067") 1996-Up 1 45432-39517
41892BC ..... Snap Ring, F4A51/W4A51(W4A5A)/F5A51/A5HF1 Reverse Clutch (.071") 1996-Up 1 45432-39518
41892BD ..... Snap Ring, F4A51/W4A51(W4A5A)/F5A51/A5HF1 Reverse Clutch (.075") 1996-Up 1 45432-39519
41892BE ..... Snap Ring, F4A51/W4A51(W4A5A)/F5A51/A5HF1 Reverse Clutch (.079") 1996-Up 1 45432-39520
41892BF ..... Snap Ring, F4A51/W4A51(W4A5A)/F5A51/A5HF1 Reverse Clutch (.083") 1996-Up 1 45432-39521
41892BG ..... Snap Ring, F4A51/W4A51(W4A5A)/F5A51/A5HF1 Reverse Clutch (.087") 1996-Up 1 45432-39522
41892BH ..... Snap Ring, F4A51/W4A51(W4A5A)/F5A51/A5HF1 Reverse Clutch (.091") 1996-Up 1 45432-39523
41892BJ ..... Snap Ring, F4A51/W4A51(W4A5A)/F5A51/A5HF1 Reverse Clutch (.094") 1996-Up 1 45432-39524
41892BK ..... Snap Ring, F4A51/W4A51(W4A5A)/F5A51/A5HF1 Reverse Clutch (.098") 1996-Up 1 45432-39525
41892BL ..... Snap Ring, F4A51/W4A51(W4A5A)/F5A51/A5HF1 Reverse Clutch (.102") 1996-Up 1 45432-39526
41892BM ..... Snap Ring, F4A51/W4A51(W4A5A)/F5A51/A5HF1 Reverse Clutch (.106") 1996-Up 1 45432-39527
41892BN ..... Snap Ring, F4A51/W4A51(W4A5A)/F5A51/A5HF1 Reverse Clutch (.110") 1996-Up 1 45432-39528
41893E ..... Snap Ring, A4CF1/A4CF2 Holds Low/Reverse Clutch Return Spring In (.058"Thick) (4.025"OD) 2006-Up 1 45691-23000
41896C ..... Snap Ring, F5A51 Reduction Brake Servo Cover (.060" Thick)(2.175" OD) 2001-Up 2 45611-39501
41896H ..... Snap Ring, A5HF1 Reduction Brake Servo Cover (.060" Thick)(2.595"OD) 2006-Up ..... 2 .....
41897C ..... Snap Ring, F5A51/A5HF1 Holds Rear Sprag To Rear Support (.058" Thick)(5.260"OD) 2001-Up 1 45754-39500
41899A ..... Snap Ring, F4A41/F4A42/F4A51/W4A42/W4A51(W4A5A) Holds Cup Race In Case (.177"Thick)(2.310"OD)(W/Hooked Ends) 1996-Up 1 45728-39000
41905C ..... Servo Assembly, F5A51 Reduction Brake Band (2"OD Cover) 2001-Up ..... 1 .....
41905H ..... Servo Assembly, A5HF1 Reduction Brake Band (2 3/8"OD Cover) 2006-Up ..... 1 .....
41925A ..... Accumulator Assembly, F4A41/F4A42/F4A51/W4A42/W4A51(W4A5A)/F5A51/A5HF1 2nd Brake (This Is The 2nd Accumumulator From The Rear In The Side Of The Case)(3 Pieces) 1996-Up ..... 1 .....
41925E ..... Accumulator Assembly, A4CF1/A4CF2 Low/Reverse (1.170"OD Plastic Piston)(Yellow Outer & Yellow Inner Spring) 2006-Up ..... 1 .....
S41927AK ..... Piston Assembly, F4A41/F4A42/F4A51/W4A42/F4A51 Accumulator (Contains: 1 Piston, 1 Viton Ring, 1 Teflon Ring)(Fits Low/Reverse, Overdrive, Underdrive & 2nd Brake Accumumulator) 1996-Up (Sonnax) ..... 1 .....
41930C ..... Accumulator Assembly, F5A51/A5HF1 Direct Clutch (4 Pieces) 2001-Up (Goes Into Top Of Case) ..... 1 .....
41935A ..... Accumulator Assembly, F4A41/F4A42/F4A51/W4A42/W4A51(W4A5A)/F5A51/A5HF1 Overdrive (2 Pieces) 1996-Up ..... 1 .....
41935E ..... Accumulator Assembly, A4CF1/A4CF2 Overdrive (1.170"OD Plastic Piston)(Yellow Outer Spring) 2006-Up (Also Fits A4CF1/A4CF2 Low/Reverse # 945 2006-Up) ..... 1-2 .....
41945A ..... Accumulator Assembly, F4A41/F4A42/F4A51/W4A42/F5A51/A5HF1 Low/Reverse (3 Pieces) 1996-Up (Also Fits F4A41/F4A42/F4A51/W4A42/W4A51(W4A5A)/F5A51/A5HF1 Underdrive Accumulator Assembly 1996-Up) ..... 1-2 .....
41945E ..... Use U41935E ..... 1 .....
41950A ..... Use 41945A ..... 1 .....
41950E ..... Accumulator Assembly, A4CF1/A4CF2 Underdrive (1.170"OD Plastic Piston)(White Outer & White Inner Spring) 2006-Up ..... 1 .....
41956A ..... Housing, F4A41/F4A42/W4A42 2nd Brake Clutch Piston (6 13/16" OD) 1996-Up (Also Fits A4CF1/A4CF2 2006-Up) 1 45674-39001
41956B ..... Housing, F4A51/W4A51(W4A5A)/F5A51/A5HF1 2nd Brake Clutch Piston (7 5/8"OD) 1996-Up 1 45674-39501
41960A ..... Piston, F4A41/F4A42/W4A42 Overdrive Clutch (Cast # 500747) 1996-Up 1 45451-39000
41960B ..... Piston, F4A51/W4A51(W4A5A)/F5A51/A5HF1 Overdrive Clutch (Cast # 500754) 1996-Up 1 45451-39500
41960E ..... Piston, A4CF1/A4CF2 Overdrive Clutch (Aluminum)(Cast # 45535-23001) 2006-Up 1 45530-23000
41960EA ..... Piston, A4CF1/A4CF2 Overdrive Bonded (1.075"Tall)(2,370"ID) (OE# 45530-23800) ..... 1 .....
41960EAK ..... Piston Kit, A4CF1/A4CF2 Overdrive Bonded (All 3 Pcs) ..... 1 .....
41961A ..... Piston, F4A41/F4A42/W4A42 Underdrive Clutch (5.357" OD)(Aluminum) 1996-Up 1 45521-39000
41961B ..... Piston, F4A51/W4A51(W4A5A)/F5A51/A5HF1 Underdrive Clutch (5.672"OD)(Aluminum) 1996-Up 1 45521-39500
41961E ..... Piston, A4CF1/A4CF2 Underdrive Clutch (Aluminum)(Cast # 45423-23001) 2006-Up 1 45420-23000
41962A ..... Piston, F4A41/F4A42/W4A42 2nd Brake Clutch (.690" Thick)(6 5/8" OD) 1996-Up 1 45676-39000
41962B ..... Piston, F4A51/W4A51(W4A5A)/F5A51/A5HF1 2nd Brake Clutch (.655"Thick)(7 1/2"OD) 1996-Up ..... 1 .....
41962BA ..... Piston, F4A51/W4A51(W4A5A)/F5A51 2nd Brake Clutch (.735"Thick)(7 1/2"OD) 1996-Up 1 45676-39530
41962E ..... Piston, A4CF1/A4CF2 2nd Brake Clutch (Aluminum)(.680"Thick)(Cast #45676-23310) 2006-Up 1 45676-23310
41965C ..... Piston, F5A51/A5HF1 Direct Clutch (Aluminum)(2.245" ID) 2001-Up 1 45554-39510
41967A ..... Piston, F4A41/F4A42/W4A42 Low/Reverse Clutch (6 3/16" OD)(.925" Thick At Edge) 1996-Up 1 45651-39010
41967AA ..... Piston, F4A41/F4A42/F4A51/W4A42/W4A51(W4A5A) Low/Reverse Clutch (6 3/16"OD) (1.015"Thick At Edge) 1996-Up 1 45651-39003

© Whatever It Takes Transmission Parts. Inc.

PART #	HARDPARTS (Continued)	QTY	REFERENCE #
41967B	Piston, F4A51/W4A51(W4A5A)/F5A51/A5HF1 Low/Reverse Clutch (7”OD)(.970”Thick At Edge) 1996-Up	1	
41967BA	Piston, F4A51/W4A51(W4A5A)/F5A51 Low/Reverse Clutch (7”OD)(.850”Thick At Edge) 1996-Up	1	45652-39500
41967E	Piston, A4CF1/A4CF2 Low/Reverse Clutch (Aluminum)(.700”Thick)(6.174”OD)(Cast # GMB2) 2006-Up	1	45618-23300
41970A	Return Spring, F4A41/F4A42/W4A42 Overdrive Clutch Piston (18 Springs) 1996-Up (Also Fits F4A41/F4A41/W4A42 Underdrive Clutch # 871)	1-2	45385-39000
41970B	Return Springs, F4A51/W4A51(W4A5A)/F5A51/A5HF1 Overdrive Clutch Piston (20 Springs) 1996-Up (Also Fits F4A51/W4A51(W4A5A)/F5A51/A5HF1 Underdrive Clutch # 971)	1-2	45416-39500
41970E	Return Spring, A4CF1/A4CF2 Overdrive Clutch Piston (19 Springs)(3.515”OD) 2006-Up	1	45538-23000
41971A	Use U41970A	1	
41971B	Use U41970B	1	
41971E	Return Spring, A4CF1/A4CF2 Underdrive Clutch (20 Springs)(3 7/8”OD) 2006-Up	1	45416-39000
41972A	Return Spring, F4A41/F4A42/W4A42 2nd Brake Clutch (6 13/16” OD) 1996-Up	1	45681-39020
41972B	Return Spring, F4A51/W4A51 (W4A5A)/F5A51/A5HF1 2nd Brake Clutch (7 5/8”OD) 1996-Up	1	45681-39510
41972E	Return Spring, A4CF1/A4CF2 2nd Brake Clutch (6 3/4”OD) 2006-Up	1	45682-23000
41975C	Spring, F5A51/A5HF1 Direct Clutch Return (20 Springs) 2001-Up	1	45581-39500
41977A	Return Spring, F4A41/F4A42/F4A51/W4A42/W4A51(W4A5A) Low/Reverse Clutch (5 1/2”OD) (Spiral)1996-Up	1	45685-39020
41977B	Return Spring, F4A51/W4A51(W4A5A)/F5A51/A5HF1 Low/Reverse Clutch (6 1/2”OD) (Spiral) 1996-Up	1	45685-39510
41977E	Return Spring, A4CF1/A4CF2 Low/Reverse Clutch (.063”Thick)(4.615”OD) 2006-Up	1	45621-23000
41980A	Retainer, F4A41/F4A42/W4A42 Overdrive Clutch Spring (Aluminum)(22 Spring Pockets) (4.950” OD) 1996-Up	1	45452-39000
41980B	Retainer, F4A51/W4A51(W4A5A)/F5A51/A5HF1 Overdrive Clutch Spring (Aluminum)(22 Spring Pockets)(5.500”OD) 1996-Up	1	45452-39500
41980E	Retainer/Piston, A4CF1/A4CF2 Overdrive Clutch Spring (Aluminum)(Cast# 45542-23000) 2006-Up	1	45540-23000
41980EA	Retainer, A4CF1/A4CF2 Overdrive Clutch Spring (Bonded)	1	
41981A	Retainer, F4A41/F4A42/W4A42 Underdrive Clutch Spring 1996-Up (Aluminum)(4.752” OD)	1	45522-39000
41981B	Retainer, F4A51/W4A51(W4A5A)/F5A51/A5HF1 Underdrive Clutch Spring (Aluminum) (5.305”OD) 1996-Up	1	45522-39500
41981E	Retainer/Piston, A4CF1/A4CF2 Underdrive Clutch Spring (Aluminum)(Cast # 45425-23001) 2006-Up	1	45424-23000
41985C	Retainer, F5A51/A5HF1 Direct Clutch Spring (Aluminum) 2001-Up	1	45575-39500
41987A	Retainer, F4A41/F4A42/F4A51/W4A42/W4A51(W4A5A) Low/Reverse Clutch Spring (5 1/2”OD) 1996-Up	1	45679-39020
41987B	Retainer, F4A51/W4A51(W4A5A)/F5A51/A5HF1 Low/Reverse Clutch Spring (6 1/2”OD) 1996-Up	1	45679-39530
41987E	Retainer, A4CF1/A4CF2 Low/Revere Clutch Spring (.063”Thick)(4.515”OD)(Dished) 2006-Up	1	45623-23030
41991-2E	Detent Spring, A4CF1/A4CF2 Rooster Comb (2 7/8”Long) 2006-Up	1	45950-23000
41991-3E	Rooster Comb, A4CF1/A4CF2 2006-Up	1	45940-23100
41991-4E	Manual Shaft, A4CF1/A4CF2 (13 5/8” Long) 2006-Up	1	45943-23010
41991-5E	Lever, A4CF1/A4CF2 Manual Shaft To Manual Valve (2” Long) 2006-Up	1	45980-23000
41991A	Linkage Assembly, F4A41/F4A42/W4A42 Internal (Rooster Comb Has Cast # 1) 1996-Up	1	
41991B	Linkage Assembly, F4A51/W4A51/(W4A5A)/F5A51 Internal (Rooster Comb Has Cast # 2) 1996-Up	1	
41991H	Linkage Assembly, A5HF1 Internal (Rooster Comb Has Cast #2)(#994 Is 5 3/16” Long) (Contains: #991-2, 991-4, 991-6, 994) 2006-Up	1	
41992A	Shift Lever, F4A41/F4A42/W4A42 (Cast # 1)(No Weight) 1996-Up	1	45932-39650
41992AA	Shift Lever, F4A41/F4A42/W4A42 (Cast # 9)(W/Weight) 1996-Up	1	
41992B	Shift Lever, F4A51/W4A51(W4A5A) (Cast # 8)(W/Weight) 1996-Up	1	
41992C	Shift Lever, F5A51 (Cast # 74)(No Weight) 2001-Up	1	
41992H	Shift Lever, A5HF1 (Cast # A5)(No Weight) 2006-Up	1	
41994E	Park Rod Actuator, A4CF1/A4CF2 (6 7/8” Long) 2006-Up	1	45920-23010
41995A	Park Pawl Assembly, F4A41/F4A42/W4A42 (Flat)(Uses A Spacer)(4 Pieces) 1996-Up	1	
41995B	Park Pawl Assembly, F4A51/W4A51(W4A5A) (Flat)(Cast # 4A51)(Uses A Spacer)(4 Pieces) 1996-Up	1	
41995C	Park Pawl Assembly, F5A51 (Offset)(No Spacer)(#995-1 Is 6 1/16” LOng)(Contains: 995-1, 995-2, 995-3) 2001-Up	1	
41995E	Park Pawl Assembly, A4CF1/A4CF2 (4 Pieces) 2006-Up	1	
41995H	Park Pawl Assembly, A5HF1 (Offset)(No Spacer)(#995-1 Is 6 3/8” Long)(Contains: # 995-1, 995-2, 995-3) 2006-Up	1	
41996-1E	Cooler Lines, A4CF1/A4CF2 (Two Lines W/1 Bolt Bracket)(Kia) 2006-Up	1	
41996E	Fittings, A4CF1/A4CF2 (Cooler Line Fittings) 2006-Up	2	
41999C	Lube Tube, F5A51 /A5HF1 Goes In Case (W/2 Brackets) 2001-Up	1	

© Whatever It Takes Transmission Parts. Inc.

THE ONE FI



FI Diesel SFI 29.3 Billet Flexplates

DD-59BIL	5.9L 152T Cummins 47RE/48RE Dodge 1994-2007 Internal Balance
DD-67BIL	6.7L 152T Cummins 68RFE Dodge 2007.5-2018 Internal Balance
FD-73BIL	7.3L 155T Powerstroke 4R100 Ford 1994-2003
FD-60BIL	6.0L 141T Powerstroke 5R110 Ford 2003-2007
FD-64BIL	6.4L 141T Powerstroke 5R110 Ford 2008-2010
FD-67BIL	6.7L 141T Powerstroke 6R140 Ford 2010-
GD-LB7/LLYBIL	6.6L 116T Duramax Allison Chevy/GMC
GD-LBZ/LMMBIL	6.6L 116T Duramax Allison Chevy/GMC
GD-66BIL	6.6L 116T Duramax Allison Chevy/GMC Internal Balance

FI Gasoline SFI 29.2 One PCS Billet Flexplates

	Converter Bolt Pattern
GG-305-BIL	Chevy 153T 9.750". 10.750". Internal Balance
GG-350-BIL	Chevy 168T 10.75". 11.063". 11.5" Internal Balance
GG-LS-BIL	Chevy 168T 10.75". 11.063". 11.5" Internal Balance
GG-350L-BIL	Chevy 168T 10.75". 11.063". 11.5"
GG-350L-153-BIL	Chevy 153T 9.750". 10.750"
GG-400-BIL	Chevy 168T 10.75". 11.063". 11.5"
GG-454-BIL	Chevy 168T 10.75". 11.063". 11.5"
GG-454L-BIL	Chevy 168T 10.75". 11.063". 11.5"
FG-302N-BIL	Ford 164T 10.5". 10.75". 11.38". 11.5" Internal Balance
FG-302E-BIL	Ford 164T 10.5". 10.75". 11.38". 11.5"
FG-302L-BIL	Ford 164T 10.5". 10.75". 11.38". 11.5"
FG-460-BIL	Ford 164T 10.5". 10.75". 11.38". 11.5"
FG-460A-BIL	Ford 164T 10.5". 10.75". 11.38". 11.5" Internal Balance
FG-302-157-BIL	Ford 157T 10.5". 10.75". 11.5"
FG-302-157-50BIL	Ford 157T 10.5". 10.75". 11.5"

True SFI 29.2 and 29.3 Approved Material
18 Months Warranty.
At least double stronger than OEM.
Perfect Billet design keep lower Centrifugal Force
Best choice for towing. street. racing and sled-pulling
Multi-suitable design fit for different OEM and aftermarket converters.

Become distributor please call: info@fiperformance.club



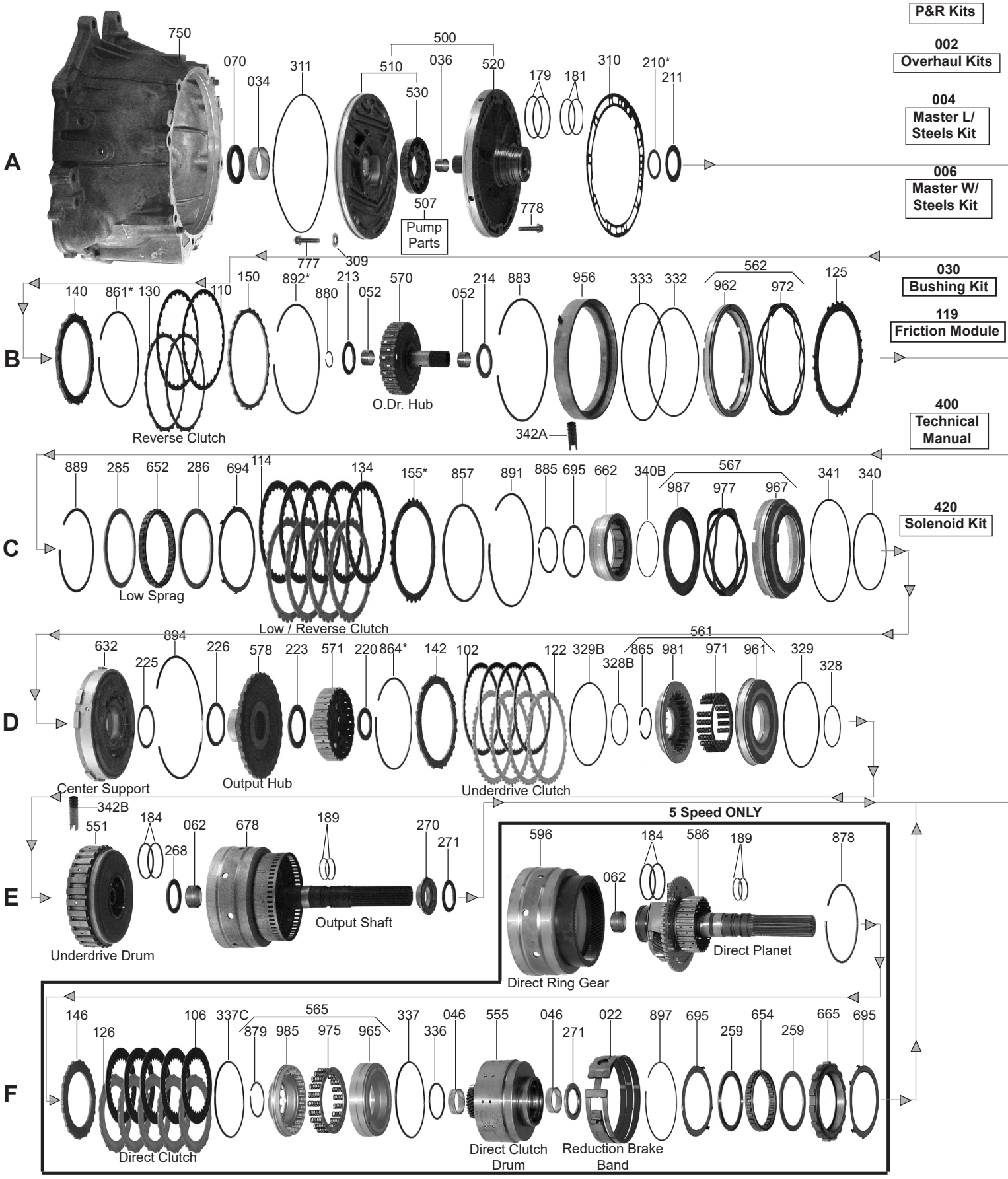

000 P&R Kits

002 Overhaul Kits

004 Master L/ Steels Kit

006 Master W/ Steels Kit

030 Bushing Kit

119 Friction Module

400 Technical Manual

420 Solenoid Kit

© Whatever It Takes Transmission Parts. Inc.

R4A51 / V4A51 / R5A51 / V5A51

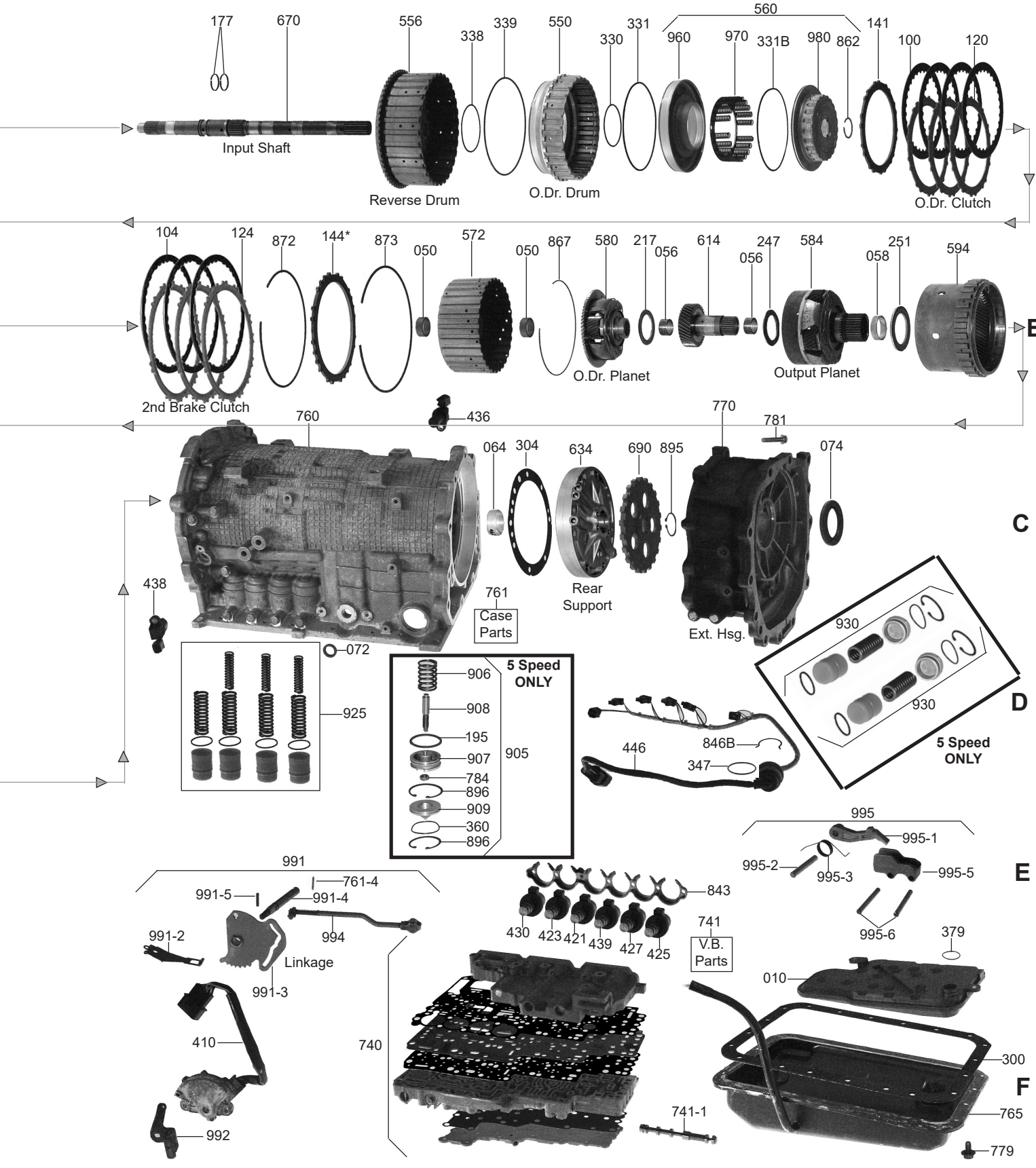

1-800-940-0197

© Whatever It Takes Transmission Parts. Inc.

PART #	PAPER & RUBBER KIT	QTY.	REFERENCE #
142000A	Paper & Rubber Kit, R4A51/V4A51 4 Speed RWD 1999-02 (Also Fits R5A51/V5A51 5 Speed RWD 2001-02)	1	

PART #	OVERHAUL KIT	QTY	REFERENCE #
142002A	Overhaul Kit, R4/V4/R5/V5A51 (4 Speed 1999-02) (5 Speed 2001-Up) RWD/4x4	1	

PART #	MASTER L/STEELS KIT	QTY	REFERENCE #
142004AF	Master L/Steels Kit, R4A51/V4A51 (4 Speed RWD) 1997-Up	1	
142004BF	Master L/Steels Kit, R5A51/V5A51 (5 Speed RWD) 1999-Up	1	

PART #	MASTER W/STEELS KIT	QTY	REFERENCE #
142006AF	Master W/Steels Kit, R4A51/V4A51 (4 Speed RWD) 1997-Up	1	
142006BF	Master W/Steels Kit, R5A51/V5A51 (5 Speed RWD) 1999-Up	1	

PART #	FILTERS	QTY	REFERENCE #
142010A	Filter, R4/V4/R5/V5A51 RWD/4x4 (No Pick-Up Tube) For The Shallow Pan 1999-Up	1	
142010B	Filter, R4/V4/R5/V5A51 RWD/4x4 (With 1/2" Pick-Up Tube) For The Deep Pan 2000-Up	1	

PART #	BANDS	QTY	REFERENCE #
41022C	Band, R5/V5A51 Reduction Brake (1 1/2" Wide) 2001-Up (This Looks Like 84022 (4T60E) Forward Band, But Smaller)	1	MD762016

PART #	BUSHINGS	QTY	REFERENCE #
142030A	Bushing Kit, R4A51 (9 Bushings) 1999-04	1	
142034A	Bushing, R4/V4/R5/V5A51 Pump Body 1999-Up	1	
142034AD	Bushing, R4/V4/R5/V5A51 Pump Body (Enhanced W/CT-101 Dry Film Lubricant)(W/Indents For Better Oil Retention) 1999-Up	1	
142036A	Bushing, R4/V4/R5/V5A51 Stator (Front) (.875"ID) 1999-Up	1	
41046C	Bushing, R5/V5A51 Direct Clutch Drum (Front & Rear) (1.459"ID) 2001-Up	2	
142050A	Bushing, R4/V4/R5/V5A51 2nd Brake Hub (Front & Rear) 1999-Up	2	
142052A	Bushing, R4/V4/R5/V5A51 Overdrive Hub (Front & Rear) (.810"ID) 1999-Up	2	
142056A	Bushing, R4/V4/R5/V5A51 Output Sun Gear (Front & Rear) (.800"ID) 1999-Up	2	
142058A	Bushing, R4/V4/R5/V5A51 Output Planet (Rear) (1.300"ID) 1999-Up	1	
142062A	Bushing, R4/V4/R5/V5A51 Output Shaft (Front) (1.105"ID) 1999-Up	1	
142064A	Bushing, R4/V4A51 Rear Support (1.440"ID) 1999-02	1	

PART #	METAL CLAD SEALS	QTY	REFERENCE #
142070A	Seal, R4/V4/R5/V5A51 Front Pump 1999-Up	1	
42070A	Seal, R4A51/V4A51/R5A51/V5A51 (Front)	1	
142074A	Seal, R4A51 (4 Speed RWD) 2WD Extention Housing 1999-02	1	
142074AB	Seal, V4/V5A51 4x4 Extention Housing (1.715"ID) (2.700"OD) 1999-Up	1	

PART #	FRICTION CLUTCH	QTY	REFERENCE #
41100B	Friction, R4/V4/R5/V5A51 Overdrive Clutch (.067") 30 Teeth (5.82"OD) 1999-Up	4	
41102B	Friction, R4/V4/R5/V5A51 Underdrive Clutch (.067") 30 Teeth (5.82"OD) 1999-Up	4	
41104B	Friction, R4/V4/R5/V5A51 2nd Brake Clutch (.067") 30 Teeth (7.03"OD) 1999-Up (High Energy Eclipse)(1/2" Wide Lining ID To OD)	4	
41106C	Friction, R5/V5A51 Direct Clutch (.072") 30 Teeth (4.802"OD) (Flat) 2001-Up		
41110B	Friction, R4/V4/R5/V5A51 Reverse Clutch (.067") 30 Teeth (6.53"OD) 1999-Up	2	
41114B	Friction, R4/V4/R5/V5A51 Low/Reverse Clutch (.067") 30 Teeth (7.03"OD) 1999-Up (High Energy Eclipse)(1/4" Wide Lining ID To OD)	5	
142119A	Friction Module, R4A51/V4A51 1994-Up	1	
142119B	Friction Module, R5A51/V5A51 1999-Up	1	

PART #	STEEL CLUTCH	QTY	REFERENCE #
41120B	Steel, R4/V4/R5/V5A51 Overdrive Clutch (.098") 20 Teeth (4.855"ID) 1999-Up (Also Fits R5/V5A51 Overdrive Clutch Apply Plate #141 1999-Up)	3	
41122B	Steel, R4/V4/R5/V5A51 Underdrive Clutch (.071") (20 Teeth) 1999-Up	4	
142124A	Steel, R4/V4/R5/V5A51 2nd Brake Clutch (.153") 16 Teeth (6.044"ID) 1999-Up	2	

© Whatever It Takes Transmission Parts. Inc.

142124AA ..... Steel, R4/V4/R5/V5A51 2nd Brake Clutch (.153") 16 Teeth (6.040"ID) (.095" Thick At The Teeth) 1999-Up 1
142125A ..... Steel, R4/V4/R5/V5A51 2nd Brake Clutch (Bottom) .087" (18 Teeth) (6.032"ID) 1999-Up 1
41126C ..... Steel, R5/V5A51 Direct Clutch (.098") 20 Teeth (3.475"ID) 2001-Up 1
41130B ..... Steel, R4/V4/R5/V5A51 Reverse Clutch (.071) 20 Teeth (6.040"ID) 1999-Up 2
41134B ..... Steel, R4/V4/R5/V5A51 Low/Reverse Clutch (.039") 16 Teeth (6 1/4"OD) 1999-Up 4
41139B ..... Steel Module, R5A51/V4A51 1999-02 1
41139C ..... Steel Module, R5A51/V5A51 2001-Up 1

PART #	PRESSURE PLATES	QTY	REFERENCE #

41140B ..... Pressure Plate, R4/V4/R5/V5A51 Overdrive & Underdrive Clutch (.159") 20 Teeth (4.855"ID) 1-2
142141A ..... Use 41140B 1
142141B ..... Use 41120B 1
142142AA ..... Use 41140B 1
142144AA ..... Pressure Plate, R4/V4/R5/V5A51 2nd Brake Clutch (Selective) (24 Teeth) 1999-Up 1
41146CA ..... Pressure Plate, R5/V5A51 Direct Clutch (.160") 20 Teeth (3.475"ID) 2001-Up 1
41150B ..... Pressure Plate, R4/V4/R5/V5A51 Reverse Clutch (.158") 28 Teeth (3.035"ID) 1999-Up 1
142155AA ..... Pressure Plate, R4/V4/R5/V5A51 Low/Reverse Clutch (Selective) 16 Teeth (6.032"ID) 1999-Up 1

PART #	SEALING RINGS	QTY	REFERENCE #

142175A ..... Ring Kit, R4/V4/R5/V5A51 1999-Up 1
142177AT ..... Ring, R4/V4/R5/V5A51 Input Shaft (Teflon) 1999-Up 2
142179A ..... Ring, R4/V4/R54/V5A51 Stator (Front) 2.770"OD (Metal) 1999-Up 2
142181A ..... Ring, R4/V4/R5/V5A51 Stator (Rear) 2.335"OD (Metal) 1999-Up 2
142184AT ..... Ring, R4/V4/R5/V5A51 Underdrive Clutch Drum (Teflon) 1999-Up 2
142189A ..... Ring, R4/V4A51 Output Shaft To Rear Support (Metal) 1999-02 2
142189B ..... Ring, R5/V5A51 Direct Drum To Rear Support (Metal) 2001-Up 2
142195BT ..... Ring, R5/V5A51 Reduction Brake Band Servo (Teflon) 2001-Up

PART #	WASHERS & BEARINGS	QTY	REFERENCE #

142210AA ..... Use 41233 1
142211A ..... Bearing W/1 Race, R4/V4/R5/V5A51 Stator To Reverse Drum 1999-Up 1
142213A ..... Use 41248B 1-3
142214A ..... Use 41248B 1
142217A ..... Bearing W/1 Race, R4/V4/R5/V5A51 Overdrive Planet To Output Sun Gear 1999-Up 1
142220A ..... Bearing W/Races, R4/V4/R5/V5A51 Underdrive Clutch Hub To Underdrive Clutch Drum (2.130"OD) 1999-Up 1
142223A ..... Bearing W/Races, R4/V4/R5/V5A51 Output Hub To Underdrive Hub (2.825"OD) 1999-Up 1
142225A ..... Race, R4/V4/R5/V5A51 Center Support To Output Hub (.071" Thick) (2.870"OD) 1999-Up 1
142226A ..... Bearing W/1 Race, R4/V4/R5/V5A51 Center Support To Output Hub (2.807"OD) 1999-Up 1
41233AA ..... Race, R4/V4/R5/V5A51 Stator To Reverse Drum (.063") 1999-Up 1
41233AB ..... Race, R4/V4/R5/V5A51 Stator To Reverse Drum (.067") 1999-Up 1
41233AC ..... Race, R4/V4/R5/V5A51 Stator To Reverse Drum (.071") 1999-Up 1
41233AD ..... Race, R4/V4/R5/V5A51 Stator To Reverse Drum (.075") 1999-Up 1
41233AE ..... Race, R4/V4/R5/V5A51 Stator To Reverse Drum (.079") 1999-Up 1
41233AF ..... Race, R4/V4/R5/V5A51 Stator To Reverse Drum (.083") 1999-Up 1
41233AG ..... Race, R4/V4/R5/V5A51 Stator To Reverse Drum (.087") 1999-Up 1
41233AH ..... Race, R4/V4/R5/V5A51 Stator To Reverse Drum (.091") 1999-Up 1
41233AJ ..... Race, R4/V4/R5/V5A51 Stator To Reverse Drum (.094") 1999-Up 1
41233AK ..... Race, R4/V4/R5/V5A51 Stator To Reverse Drum (.098") 1999-Up 1
41233AL ..... Race, R4/V4/R5/V5A51 Stator To Reverse Drum (.102") 1999-Up 1
142247A ..... Use 41248B 1
41248B ..... Bearing W/Races, R4/V4/R5/V5A51 Reverse Drum To Overdrive Hub (.161" Thick) 2.240"OD (1.520"ID) 1999-Up (Also Fits Overdrive Hub To 2nd Brake Clutch Hub #214) (Also Fits Output Sun Gear To Output Planet #247) 1-3
142251A ..... Bearing W/Races, R4/V4/R5/V5A51 Output Planet To Support (1.925"ID) (2.750"OD) 1999-Up 1
142268A ..... Bearing W/Races, R4/V4/R5/V5A51 Underdrive Drum To Output Shaft 1999-Up 1
142270A ..... Race, R4/V4A51 Output Shaft (Rear) (Top Hat Type) 1999-02 1
142271A ..... Bearing W/Races, R4/V4A51 Output Shaft (Rear) 1999-02 1
142271B ..... Bearing W/Races, R5/V5A51 Direct Clutch Drum To Rear Support 2001-Up 1

PART #	GASKETS & RUBBER COMPONENTS	QTY	REFERENCE #

142300A ..... Gasket, R4/V4/R5/V5A51 Bottom Pan (4 and 5 Speed) 1999-Up 1
142304A ..... Gasket, R4/V4/R5/V5A51 Case To Rear Support 1999-Up 1
142310A ..... Gasket, R4/V4/R5/V5A51 Pump (4 and 5 Speed) 1999-Up 1

© Whatever It Takes Transmission Parts. Inc.

PART #	GASKETS & RUBBER COMPONENTS (Continued)	QTY	REFERENCE #
142311A	O-Ring, R4/V4/R5/V5A51 Pump Body 1999-Up	1	
142309A	Washer/Seal, R4/V4/R5/V5A51 Pump Bolt (Takes 10) 1999-Up	10	
142342A	Seal Tube, R4/V4/R5/V5A51 Valve Body To 2nd Brake Clutch Housing 1999-Up (1 3/4" Long)	1	
142342AB	Seal Tube, R4/V4/R5/V56A51 Valve Body To Center Support #632 1999-Up (2 1/16" Long)	1	

PART #	TECHNICAL MANUALS	QTY	REFERENCE #
142400A	Technical Manual, R4A51/V4A51	1	
142401A	Technical Manual On CD, R4A51/V4A51/V5A51 (Covers 4 & 5 Speed)	1	

PART #	ELECTRICAL COMPONENTS	QTY	REFERENCE #
142410A	Switch, R4/V4/R5/V5A51 PRNDL (2 Bolt, 10 Prong) 1999-Up	1	
T142420A	Solenoid Master Kit, V4A51 (Shifts, Lock-up, TCC & EPC) 2001-Up	1	
T41425A	Solenoid, R4A51/V4A51/R5A51/V5A51 (TCC/Overdrive/Underdrive/Second/Low/Reverse)	1	
142436A	Sensor, R4/V4/R5/V5A51 Output Speed (Cast # G4T07171) 1999-Up	1	
142438A	Sensor, R4/V4/R5/V5A51 Input Speed (Cast # G4T07071) 1999-Up	1	
142446A	Wire Harness, R4/V4A51 Internal/External (9 Prong Case Connector) (3 Two Wire Connectors & 3 Three Wire Connectors) (37" Long) 1999-02	1	
142446B	Wire Harness, R5/V5A51 Internal/External (10 Prong Case Connector) (3 Two Wire Connector & 2 Three Wire Connector) (31" Long) 2001-Up	1	

PART #	HARD PARTS	QTY	REFERENCE #
142500A	Pump, R4/V4/R5/V5A51 Complete (Aluminum)(With Bushing In Body) 1999-Up	1	
142500B	Pump, R4/V4/R5/V5A51 Complete (Aluminum)(No Bushing In Body) 1999-Up	1	
142510A	Body W/Gears, R4/V4/R5/V5A51 Pump (Aluminum) (Bushing Type) 1999-Up	1	
142510B	Body W/Gears, R4/V4/R5/V5A51 Pump (Aluminum) (No Bushing Type) 1999-Up	1	
142520A	Stator, R4/V4/R5/V5A51 Pump (Aluminum) (4 Rings) 1999-Up	1	

PART #	PUMP COMPONENTS	QTY	REFERENCE #
142530A	Pump Gear Set, R4/V4/R5/V5A51 (13 Teeth Outer / 11 Teeth Inner) (.531" Thick) (3.592"OD) 1999-Up	1	

PART #	HARD PARTS (Continued)	QTY	REFERENCE #
142550A	Drum, R4/V54/R5/V5A51 Overdrive (Aluminum) (4 and 5 Clutch) 1999-Up	1	
142551A	Drum, R4/V4/R5/V5A51 Underdrive Clutch (4 Clutch) Stamped Steel 1999-Up	1	
142555B	Drum, R5/V5A51 Direct Clutch (5 Clutch) (With 32 Teeth Sun Gear, With 1 Groove) 2001-Up	1	
142556A	Drum, R4/V4/R5/V5A51 Reverse Clutch (Stamped Steel) (With 60 Teeth Pick-up) 3.260" Tall (Uses 30 Teeth Steels) 1999-Up	1	
142560A	Piston Kit, R4/V4/R5/V5A51 Overdrive Clutch 1999-Up	1	
142561A	Piston Kit, R4/V4/R5/V5A51 Underdrive Clutch 1999-Up	1	
142562A	Piston Kit, R4/V4/R56/V5A51 2nd Brake Clutch 1999-Up	1	
142565B	Piston Kit, R5/V5A51 Direct Clutch 2001-Up	1	
142567A	Piston Kit, R4/V4/R5/V5A51 Low/Reverse Clutch 1999-Up	1	
142570A	Hub, R4/V4/R5/V5A51 Overdrive Clutch (30 Teeth) (1.080"OD Neck) 1999-Up	1	
142571A	Hub, R4/V4/R5/V5A51 Underdrive Clutch (30 Teeth) (4.750"OD) 1999-Up	1	
142572A	Hub, R4/V4/R5/V5A51 2nd Brake Clutch (With 25 Teeth Sun Gear) 1999-Up	1	
142578A	Hub, R4/V4/R5/V5A51 Output (30 Outer Lugs) (6 5/8"OD) 1999-Up	1	
142580A	Planet, R4/V4/R5/V5A51 Overdrive (3 Gear) Steel (21 Teeth Pinion Gears) No Grooves 1999-Up	1	
142584A	Planet, R4/V4A51 Output (4 Gear) Steel (17 Teeth Pinions W/3 Grooves) 1999-02	1	
142584B	Planet, R5/V5A51 Output (4 Gear) Steel (15 Teeth Pinions W/1 Groove) 2001-Up	1	
142586B	Planet, V5A51 With Output Shaft (4x4) Direct (3 Gear) 21 Teeth Pinions W/1 Groove (10 3/4" Long) 2001-Up	1	
142586BK	Planet Kit, V5A51 With Output Shaft 4x4 Direct (Contains: 586B, 596B, 555B & 565B)	1	
142594A	Ring Gear, R4/V4/R5/V5A51 Output Planet (70 Teeth No Groove) 30 Parking Lugs (6 Holes) (Comes With Low Sprag #652, 285 & 694) 1999-Up	1	
142596B	Ring Gear, R5/V5A51 Direct Planet (78 Teeth No Groove) 2001-Up	1	
142614A	Sun Gear, R4/V4A51 Output Planet (38 Teeth No Groove) 1999-02	1	
142614B	Sun Gear, R5/V5A51 Output Planet (42 Teeth No Groove) 2001-Up	1	
142632A	Center Support, R4/V4/R5/V5A51 (Aluminum) (8 Outer Lugs) 1999-Up	1	
142634A	Support, R4/V4A51 Rear Case (Aluminum, With Bushing) 1999-02	1	
142634B	Support, R5/V5A51 Direct Drum (Aluminum, No Bushing) (With Ring Tower) 2001-Up	1	

© Whatever It Takes Transmission Parts. Inc.

PART #	SPRAGS & ONE WAY CLUTCHES	QTY	REFERENCE #
142652A	Sprag, R4/V4/R5/V5A51 Low (With 2 End Caps) (32 Lugs) 1999-Up (Can Use 142594A)	1	
41654C	Sprag W/End Caps, R5/V5A51 Rear (32 Lugs) 2001-Up	1	
142662A	Inner Race, R4/V4/R5/V5A51 Low Sprag (11 Inner Lugs) 1999-Up	1	
41665C	Outer Race, R5/V5A51 Rear Sprag (15 Outer Lugs) 2001-Up	1	

PART #	HARD PARTS (Continued)	QTY	REFERENCE #
142670A	Shaft, R4/V4/R5/V5A51 Input (14 5/8” Long) 1999-Up	1	
142678A	Shaft, R4A51 Output (2WD) With Tin Reluctor 1999-02	1	
142678AB	Shaft, V4A51 Output (4x4) With Tin Reluctor (12 1/4” Long) 1999-02	1	
142690A	Parking Gear, R4/V4/R5/V5A51 (22 Lugs, 23 Splines) 1999-Up	1	
142694A	Retainer, R4/V4/R5/V5A51 Low Sprag (6 Legs, .024” Thick) 1999-Up	1	
142695A	Shim, R4/V4/R5/V5A51 Under Low Sprag Snap Ring (.040”) 1999-Up	1	
41695C	Retainer, R5/V5A51 Rear Sprag (Both Sides) (6 Legs) 2001-Up	1	
142740A	Valve Body, R4/V4A51 (5 Solenoids) (Cast # 991228) 1999-02	1	
142740B	Valve Body, R5/V5A51 (6 Solenoids) (Cast # 991222) 2001-Up	1	

PART #	VALVE BODY COMPONENTS	QTY	REFERENCE #
142741A-1	Manual Valve, R4/V4/R5/V5A51 (4 9/16” Long) 1999-Up	1	
S41741CK	Valve & Sleeve Kit, R4A51/V4A51R5A51/V5A51 TCC control (Sonnax) 1999-Up	1	
S41741DK	Valve & Sleeve Kit, R4A51/V4A51R5A51/V5A51 Overdrive Pressure Control And 2nd Pressure Control (Contains: 1 Valve & 1 Sleeve)(Sonnax)	1	
S41741UK	Valve & Sleeve Kit, R4A51/V4A51R5A51/V5A51 Underdrive Pressure Control & Low/Reverse Pressure Control (With Orifice)(Contains: 1 Valve & 1 Sleeve)(Sonnax)	1	

PART #	HARD PARTS (Continued)	QTY	REFERENCE #
142750A	Bell Housing, R4/V4/R5/V5A51 (Top Bolts 3 1/2”) Starter At 4:00 & 8:00 (Cast # 500911) 1999-Up	1	
142760A	Case, R4/V4A51 2WD & 4x4 (Cast # R4A51 Or V4A51) 1999-02	1	
142760B	Case, R5/V5A51 2WD & 4x4 (Cast # R5A51 Or V5A51) 2001-Up	1	
142765A	Pan, R4/V4/R5/V5A51 Bottom (3 1/2” On Deep End) With 11” Long Filler Tube And Drain Plug 1999-Up	1	
142770A	Extension Housing, R4A51/R5A51 2WD (9 1/4” Long)(Cast # 751 323) 1999-Up	1	
142770C	Extention Housing, V4/V5A51 4x4 (Aluminum) 4 3/16” Thick (Cast # 500 949) 1999-Up	1	
142776AK	Bolt Set, R4/V4/R5/V5A51 Bell Housing To Case (8 Pieces) 1999-Up	1	
142777AK	Bolt Set, R4/V4/R5/V5A51 Pump To Case (10 Pieces) 1999-Up	1	
142778AK	Bolt Set, R4/V4/R5/V5A51 Body To Stator (7 Pieces) 1999-Up	1	
142779AK	Bolt Set, R4/V4/R5/V5A51 Pan To Case (20 Pieces) 1999-Up	1	
142781AK	Bolt Set, R4/V4/R5/V5A51 Extention Housing To Case (11 Pieces) 1999-Up	1	
142782AK	Bolt Set, R4/V4/R5/V5A51 Valve Body To Case (21 Pieces) 1999-Up	1	
142784B	Nut, R5/V5A51 Reduction Brake Band Servo Adjustment 2001-Up	1	
142790AK	Bolt Set, R4/V4/R5/V5A51 Rear Support To Case (8 Pieces) 1999-Up	1	
142857A	Cushion, R4/V5/R5/V5A51 Low/Reverse Clutch (.125”) (Waved) 1999-Up	1	
142861A	Use 41861		
41861BA	Snap Ring, R4/V4/R5/V5A51 Holds OverdriveClutch Pressure Plate In Drum (.063”) 1999-Up (Also Fits R4/V4/R5/V5A51 Holds Underdrive Clutch Pressure Plate In Drum 1999-Up)	1-2	
41861BB	Snap Ring, R4/V4/R5/V5A51 Holds OverdriveClutch Pressure Plate In Drum (.067”) 1999-Up (Also Fits R4/V4/R5/V5A51 Holds Underdrive Clutch Pressure Plate In Drum 1999-Up)	1-2	
41861BC	Snap Ring, R4/V4/R5/V5A51 Holds OverdriveClutch Pressure Plate In Drum (.071”) 1999-Up (Also Fits R4/V4/R5/V5A51 Holds Underdrive Clutch Pressure Plate In Drum 1999-Up)	1-2	
41861BD	Snap Ring, R4/V4/R5/V5A51 Holds OverdriveClutch Pressure Plate In Drum (.075”) 1999-Up (Also Fits R4/V4/R5/V5A51 Holds Underdrive Clutch Pressure Plate In Drum 1999-Up)	1-2	
41861BE	Snap Ring, R4/V4/R5/V5A51 Holds OverdriveClutch Pressure Plate In Drum (.079”) 1999-Up (Also Fits R4/V4/R5/V5A51 Holds Underdrive Clutch Pressure Plate In Drum 1999-Up)	1-2	
41861BF	Snap Ring, R4/V4/R5/V5A51 Holds OverdriveClutch Pressure Plate In Drum (.083”) 1999-Up (Also Fits R4/V4/R5/V5A51 Holds Underdrive Clutch Pressure Plate In Drum 1999-Up)	1-2	
41861BG	Snap Ring, R4/V4/R5/V5A51 Holds OverdriveClutch Pressure Plate In Drum (.087”) 1999-Up (Also Fits R4/V4/R5/V5A51 Holds Underdrive Clutch Pressure Plate In Drum 1999-Up)	1-2	
41861BH	Snap Ring, R4/V4/R5/V5A51 Holds OverdriveClutch Pressure Plate In Drum (.091”) 1999-Up (Also Fits R4/V4/R5/V5A51 Holds Underdrive Clutch Pressure Plate In Drum 1999-Up)	1-2	
41861BJ	Snap Ring, R4/V4/R5/V5A51 Holds OverdriveClutch Pressure Plate In Drum (.094”) 1999-Up (Also Fits R4/V4/R5/V5A51 Holds Underdrive Clutch Pressure Plate In Drum 1999-Up)	1-2	
41861BK	Snap Ring, R4/V4/R5/V5A51 Holds OverdriveClutch Pressure Plate In Drum (.098”) 1999-Up (Also Fits R4/V4/R5/V5A51 Holds Underdrive Clutch Pressure Plate In Drum 1999-Up)	1-2	
41861BL	Snap Ring, R4/V4/R5/V5A51 Holds OverdriveClutch Pressure Plate In Drum (.102”) 1999-Up (Also Fits R4/V4/R5/V5A51 Holds Underdrive Clutch Pressure Plate In Drum 1999-Up)	1-2	

© Whatever It Takes Transmission Parts. Inc.

PART #	HARD PARTS (Continued)	QTY	REFERENCE #
41861BM	Snap Ring, R4/V4/R5/V5A51 Holds OverdriveClutch Pressure Plate In Drum (.106") 1999-Up (Also Fits R4/V4/R5/V5A51 Holds Underdrive Clutch Pressure Plate In Drum 1999-Up)	1-2	
41861BN	Snap Ring, R4/V4/R5/V5A51 Holds OverdriveClutch Pressure Plate In Drum (.110") 1999-Up (Also Fits R4/V4/R5/V5A51 Holds Underdrive Clutch Pressure Plate In Drum 1999-Up)	1-2	
41861BP	Snap Ring, R4/V4/R5/V5A51 Holds OverdriveClutch Pressure Plate In Drum (.114") 1999-Up (Also Fits R4/V4/R5/V5A51 Holds Underdrive Clutch Pressure Plate In Drum 1999-Up)	1-2	
41861BQ	Snap Ring, R4/V4/R5/V5A51 Holds OverdriveClutch Pressure Plate In Drum (.118") 1999-Up (Also Fits R4/V4/R5/V5A51 Holds Underdrive Clutch Pressure Plate In Drum 1999-Up)	1-2	
142862A	Snap Ring, R4/V4/R5/V5A51 Holds Overdrive Clutch Retainer In Drum 1999-Up	1	
142864A	Use 41861	1	
41865B	Snap Ring, R4/V4/R5/V5A51 Holds Underdrive Clutch Retainer In Drum (2.085"OD) 1999-Up	1	
41867B	Snap Ring, R4/V4/R5/V5A51 Holds Overdrive Planet To Output Ring Gear (.078" Thick) (5 1/8"OD) 1999-Up	1	
142872A	Use 41884B	2	
142873A	Use 41884B		
41874B	Snap Ring, R4/V4/R5/V5A51 Holds Piston Housing To Case (.090" Thick) (8 1/16"OD) 1999-Up	1	
142878B	Snap Ring, R5/V5A51 Holds Direct Clutch Pressure Plate In 2001-Up	1	
41879C	Snap Ring, R5/V5A51 Holds Direct Clutch Retainer In 2001-Up	1	
142880A	Snap Ring, R4/V4/R5/V5A51 Holds Overdrive Hub To Shaft 1999-Up	1	
142883A	Use 41874B	1	
41884B	Snap Ring, R4/V4/R5/V5A51 Holds 2nd Brake Clutch Steels In (#872) & Pressure Plate #873 & Center Support #891 (.080") (8 1/16"OD)	1-3	
142885A	Snap Ring, R4/V4/R5/V5A51 Holds Low Sprag Inner Race To Center Support (.061" Thick) (3.005"OD) 1999-Up	1	
142889A	Snap Ring, R4/V4/R5/V5A51 Holds Low Sprag To Ring Gear (W/2 Eyelets) 1999-Up	1	
142891A	Use 41884B	1	
41892BA	Snap Ring, R4/V4/R5/V5A51 Holds Reverse Clutch In (.063") 1999-Up	1	
41892BB	Snap Ring, R4/V4/R5/V5A51 Holds Reverse Clutch In (.067") 1999-Up	1	
41892BC	Snap Ring, R4/V4/R5/V5A51 Holds Reverse Clutch In (.071") 1999-Up	1	
41892BD	Snap Ring, R4/V4/R5/V5A51 Holds Reverse Clutch In (.075") 1999-Up	1	
41892BE	Snap Ring, R4/V4/R5/V5A51 Holds Reverse Clutch In (.079") 1999-Up	1	
41892BF	Snap Ring, R4/V4/R5/V5A51 Holds Reverse Clutch In (.083") 1999-Up	1	
41892BG	Snap Ring, R4/V4/R5/V5A51 Holds Reverse Clutch In (.087") 1999-Up	1	
41892BH	Snap Ring, R4/V4/R5/V5A51 Holds Reverse Clutch In (.091") 1999-Up	1	
41892BJ	Snap Ring, R4/V4/R5/V5A51 Holds Reverse Clutch In (.094") 1999-Up	1	
41892BK	Snap Ring, R4/V4/R5/V5A51 Holds Reverse Clutch In (.098") 1999-Up	1	
41892BL	Snap Ring, R4/V4/R5/V5A51 Holds Reverse Clutch In (.102") 1999-Up	1	
41892BM	Snap Ring, R4/V4/R5/V5A51 Holds Reverse Clutch In (.106") 1999-Up	1	
41892BN	Snap Ring, R4/V4/R5/V5A51 Holds Reverse Clutch In (.110") 1999-Up	1	
142894B	Snap Ring, R5/V5A51 Holds Output Hub To Direct Planet Ring Gear 2001-Up	1	
142895A	Snap Ring, R4/V4/R5/V5A51 Holds Parking Gear To The Output Shaft 1999-Up	1	
142896B	Snap Ring, R5/V5A51 Holds Reduction Brake Band Servo Cover In (Both Sides) 2001-Up	2	
41897C	Snap Ring, R5/V5A51 Holds Rear Sprag To Rear Support 2001-Up	1	
142905B	Servo Assembly, R5/V5A51 Reduction Brake Band 2001-Up	1	
142906B	Spring, R5/V5A51 Reduction Brake Servo (1.150"OD) (1.650" Long) 2001-Up	1	
142907B	Piston, R5/V5A51 Reduction Brake Band Servo (Aluminum) (1.919"OD) 2001-Up	1	
142908B	Pin, R5/V5A51 Reduction Brake Band Servo (2.585" Long) With Threads 2001-Up	1	
142909B	Cover, R5/V5A51 Reduction Brake Band Servo (Aluminum) (1.965"OD) 2001-Up	1	
142925A	Accumulator Assembly, R4/V4/R5/V5A51 The 4 Accumulator Under Valve Body 1999-Up	1	
41927AK	Piston Assembly, R4A51/V4A51/R5A51/V5A51 Accumulator (Contains: 1 Piston, 1 Viton Ring & 1 Teflon Ring)(Fits Low/Reverse, Overdrive, Underdrive & 2nd Brake Accumulator) 1999-Up (Sonnax)	1-4	
142930B	Accumulator Assembly, R5/V5A51 The 2 Accumulator In The Side Of The Case 2001-Up	1	
142956A	Housing, R4/V4/R5/V5AS51 2nd Brake Piston (Tin, With 1 Outer Tab) (7 11/16"OD) 1999-Up	1	
142960A	Piston, R4/V4/R5/V5A51 Overdrive Clutch (Aluminum) (5.790"OD) 1999-Up	1	
142961A	Piston, R4/V4/R5/V5A51 Underdrive Clutch (Aluminum) 1999-Up	1	
142962A	Piston, R4/V4/R5/V5A51 2nd Brake Clutch (Aluminum) (7 1/2"OD) (.752" Thick) 1999-Up	1	
142965B	Piston, R5/V5A51 Direct Clutch (Aluminum) (4.844"OD) 2001-Up	1	
142967A	Piston, R4/V4/R5/V5A51 Low/Reverse Clutch (Aluminum) With 4 Notches & 1 Guide Pin 1999-Up	1	
142970A	Springs, R4/V4/R5/V5A51 Overdrive Clutch Return (20 Springs) 1999-Up (Also Fits Underdrive Clutch #971)	2	
142971A	Use 142970A	1	
142972A	Spring, R4/V4/R5/V5A51 2nd Brake Clutch Return (Spiral Type) 1999-Up	1	
41975C	Spring, R5/V5A51 Direct Clutch Return (20 Springs) 2001-Up	1	
142977A	Spring, R4/V4/R5/V5A51 Low/Reverse Clutch Return (Spiral Type) 1999-Up	1	

© Whatever It Takes Transmission Parts. Inc.

142980A .....Retainer, R4/V4/R5/V5A51 Overdrive Clutch Spring (Aluminum) 1999-Up .....1 .....
142981A .....Retainer, R4/V4/R5/V5A51 Underdrive Clutch Spring (Aluminum) 1999-Up .....1 .....
41985C .....Retainer, R5/V5A51 Direct Clutch Spring (Aluminum) 2001-Up .....1 .....
142987A .....Retainer, R4/V4/R5/V5A51 Low/Reverse Clutch Spring 1999-Up .....1 .....
142991A .....Linkage Assembly, R4/V4/R5/V5A51 Internal 1999-Up .....1 .....
142994A .....Park Rod, R4/V4/R5/V5A51 Actuator (7 1/2" Long) 1999-Up .....1 .....
142995A .....Parking Pawl Assembly, R4/V4/R5/V5A51 1999-Up .....1 .....

© Whatever It Takes Transmission Parts. Inc.

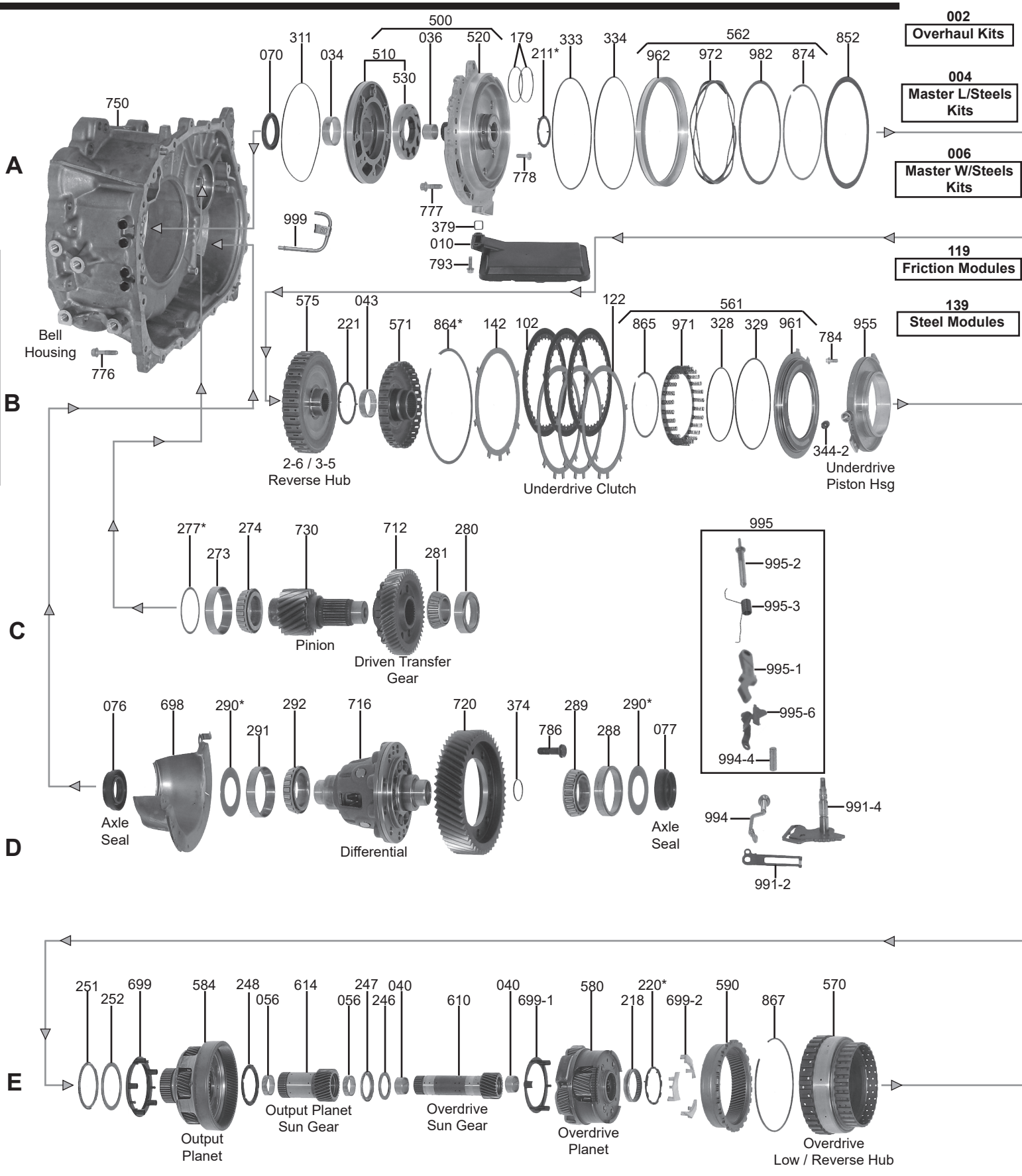

002 Overhaul Kits

004 Master L/Steels Kits

006 Master W/Steels Kits

119 Friction Modules

139 Steel Modules

© Whatever It Takes Transmission Parts. Inc.

A6GF / A6LF / A6MF / 6F24

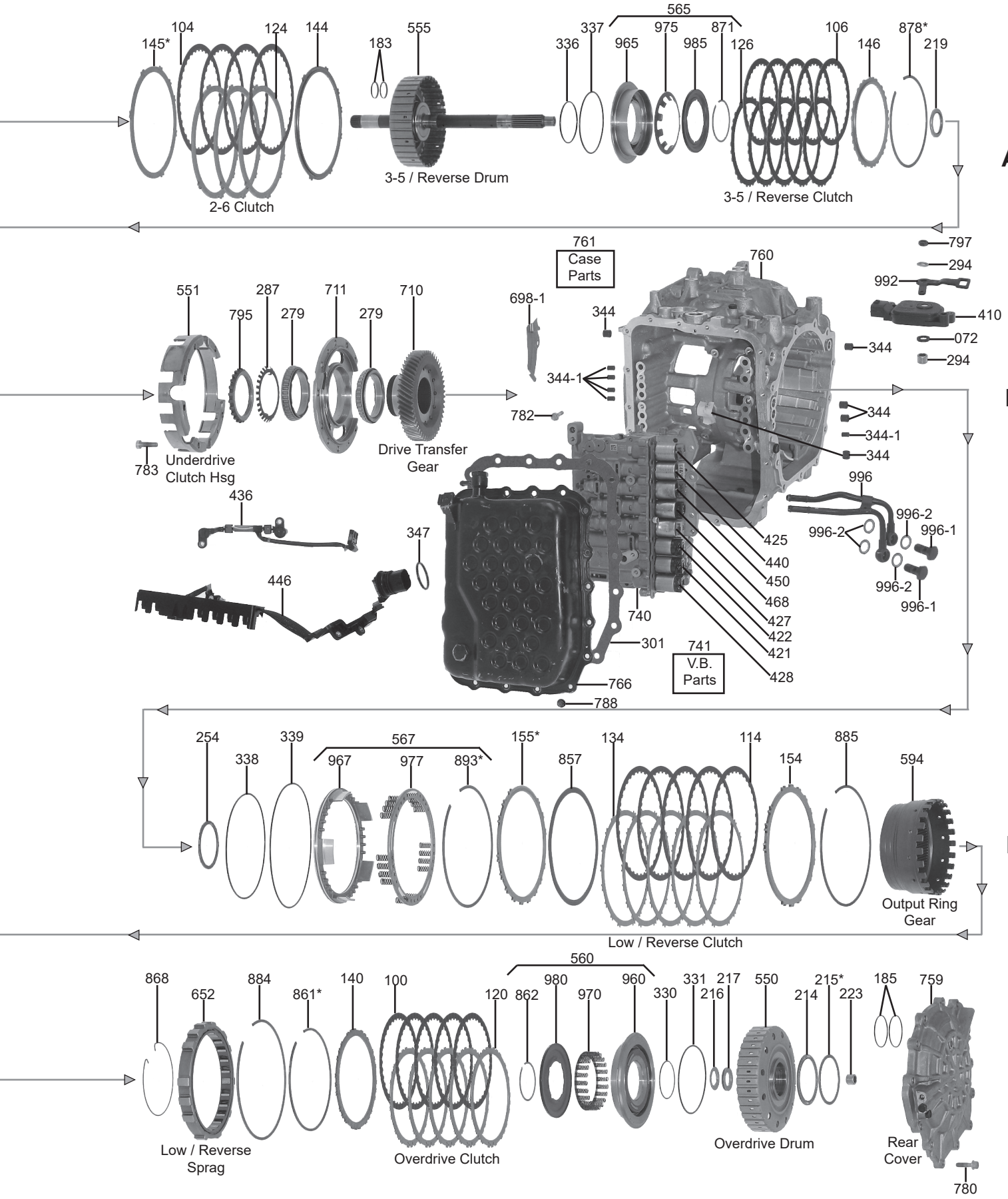

© Whatever It Takes Transmission Parts. Inc.

PART #	OVERHAUL KITS	QTY	REFERENCE #
211002AF	Overhaul Kit, A6MF1/6F24 (Hyundai/Kia) 2009-Up (For Bonded Pistons Sell A211960AK) Does Not Cover Hybrid Units)	1	TF211002A
211002BF	Overhaul Kit, A6LF1/A6LF2/A6LF3 (With Duraprene Valve Body Gasket) 2009-Up	1	
211002CW	Overhaul Kit, A6GF1 (Hyundai/Kia)(With Molded Rubber Pan Gasket) 2009-Up (For Molded Ruber Pistons Sell A211960CK Seperately)	1	

PART #	MASTER L/STEELS KITS	QTY	REFERENCE #
211004AF	Master L/Steels Kit, A6MF1/6F24 (Hyundai/Kia) 2009-Up (For Bonded Pistons Sell A211960AK)	1	
211004B	Master L/Steels Kit, A6LF2 (Hyundai/Kia) 2009-Up	1	

PART #	MASTER W/STEELS KITS	QTY	REFERENCE #
211006AF	Master W/Steels Kit, A6MF1/6F24 (Hyundai/Kia) 2009-Up (For Bonded Pistons Sell A211960AK)	1	
211006BF	Master W/Steels Kit, A6LF2 (Hyundai/Kia) 2009-Up	1	

PART #	FILTERS	QTY	REFERENCE #
211010A	Filter, A6GF1/A6MF1/A6MF2 Plastic (6 3/4" Long)(5 1/8" Wide)(Pick-Up Is 1 9/16"OD) (5/8" Tall) 2010-Up (Does Not Fit Hybrid)	1	46321-3B600
211010B	Filter, A6LF1/A6LF2 (1/2 Metal, 1/2 Plastic)(7"Long)(6" Wide)(Pick-Up Is 1 1/4"OD)(3/4" Tall) 2010-Up	1	46321-3B000
211010D	Filter, 6F24 (Plastic)(6 3/8" Long)(5 5/8" Wide)(Pick-Up Is 1 9/16"OD)(5/8" Tall) 2013-Up	1	

PART #	BUSHINGS	QTY	REFERENCE #
211030C	Bushing Kit, A6GF1/A6LF 2010-Up (Contains: 7 Bushings)	1	
S211034A	Bushing, A6GF1/A6MF2/6F24 Pump Body (.535" Wide)(1.690"ID) 2010-Up (Sonnax)	1	102034-01
211036A	Bushing, A6GF1/A6MF2/6F24 Pump Stator (Front)(.550" Wide)(.895"ID) 2010-Up	1	
211040A	Bushing, A6GF1 Overdrive Sun Gear (.460"Wide)(.780"ID) 2012-Up	2	
211040C	Bushing, A6MF2/6F24 Underdrive Clutch (.402"Wide)(1.602"ID) 2010-Up	1	
211043A	Bushing, A6GF1 Underdrive Clutch Hub (.402" Wide)(1.522"ID) 2012-Up	1	
211043C	Bushing, A6GF1 Underdrive Clutch Hub (.402" Wide)(1.522"ID) 2012-Up	1	
211056A	Bushing, A6MF2/6F24 Output Sun Gear (.470" Wide)(1.210"ID) 2010-Up	2	
211056C	Bushing, A6GF1 Output Sun Gear (.470" Wide)(1.133"ID) 2012-Up	2	

PART #	METAL CLAD SEALS	QTY	REFERENCE #
211070A	Seal, A6GF1/A6MF2/6F24 Front Pump Body (.235" Thick)(2.360"OD)(1.660"ID) 2010-Up	1	46131-3B600
211070B	Seal, A6LF1/A6LF2/A6LF3 Front Pump Body (2.520"OD)(1.790"ID)	1	
211072A	Seal, A6GF1/A6MF2/6F24 Manual Shaft (.165" Thick)(.795"OD)(.540"ID) 2010-Up	1	
211076A	Seal, A6MF2 Axle (Bell Housing Side)(.685" Thick)(2.765"OD)(1.545"ID) 2010-Up	1	
211076C	Seal, A6GF1 Axle (Bell Housing Side)(.665" Thick)(2.455"OD)(1.425"ID) 2010-Up	1	45245-3B100
211076D	Seal, 6F24 Axle (Bell Housing Side)(.665" Thick)(2.530"OD)(1.425"ID) 2013-Up	1	
211077A	Seal, A6MF2 Axle (Case Side)(.660" Thick)(2.925"OD)(1.550"ID) 2010-Up	1	
211077C	Seal, A6GF1 Axle (Case Side)(.685" Thick)(2.560"OD)(1.455"ID) 2012-Up	1	45245-3B210
211077D	Seal, 6F24 Axle (Case Side)(.665" Thick)(2.645"OD)(1.415"ID) 2013-Up	1	

PART #	FRICTIONS	QTY	REFERENCE #
211100A	Friction, A6GF1/A6MF2/6F24 Overdrive Clutch (.068")(36 Teeth)(6.015"OD) 2010-Up (A6GF1 Takes 4)(A6MF2/6F24 Takes 5)	4-5	
211102A	Friction, A6MF2/6F24 Underdrive Clutch (.069")(36 Teeth)(6 9/16"OD) 2010-Up	3	
211102C	Friction, A6GF1 Underdrive Clutch (.072")(36 Teeth)(6 5/16"OD) 2012-Up	3	
211104A	Friction, A6MF2/6F24 2-6 Clutch (.073")(36 Teeth)(7"OD) 2010-Up	4	
211104C	Friction, A6GF1 2-6 Clutch (.073")(36 Teeth)(6 5/8"OD) 2012-Up	4	45670-3B800
211106A	Friction, A6MF2 3-5/Reverse Clutch (.091")(30 Teeth)(5.265"OD)(1 Sided Friction) 2010-Up	5	
211106C	Friction, A6GF1 3-5/Reverse Clutch (.082")(30 Teeth)(4.955"OD)(1 Sided Friction) 2012-Up	4	
211106D	Friction, 6F24 3-5/Reverse Clutch (.082")(30 Teeth)(5.265"OD)(1 Sided Friction) 2013-Up	4	
211114A	Friction, A96MF2/6F24 Low/Reverse Clutch (.068")(36 Teeth)(6 15/16"OD) 2010-Up	5	
211114C	Friction, A6GF1 Low/Reverse Clutch (.072")(36 Teeth)(6 5/8"OD) 2012-Up	5	
211119A	Friction Module, A6MF1/6F24 (Hyundai/Kia) 2009-Up	1	RCP96-267
211119B	Friction Module, A6LF2 2009-Up	1	
211119C	Friction Module, A6GF1 2009-Up	1	

© Whatever It Takes Transmission Parts. Inc.

PART #	STEELS	QTY	REFERENCE #
211120A	Steel, A6GF1/A6MF2/6F24 Overdrive Clutch (.092")(27 Teeth)(5.285"ID) 2010-Up (This Is The Bottom Steel)	1	
211120AA	Steel, A6MF2/6F24 Overdrive Clutch (27 Teeth)(5.285"ID) 2010-Up (All Except The Bottom Steel)	4	
211120C	Steel, A6GF1 Overdrive Clutch (.107")(5.285"ID) 2012-Up (All Except The Bottom Steel)	3	
211122A	Steel, A6MF2 Underdrive Clutch (.079")(7 Teeth)(5.825"ID) 2010-Up	3	
211122C	Steel, A6GF1 Underdrive Clutch (.071)(7 Teeth)(5.560"ID) 2012-Up	3	
211122D	Steel, 6F24 Underdrive Clutch (.071")(5.825"ID) 2013-Up	3	
211124A	Steel, A6MF2 2-6 Clutch (.156")(7 Teeth)(6.220"ID) 2010-Up	3	
211124C	Steel, A6GF1 2-6 Clutch (.083")(7 Teeth)(5.915"OD) 2012-Up	3	
211124D	Use 211145AB	3	
211126A	Friction, A6MF2 3-5/Reverse Clutch (.120")(27 Teeth)(4.575"ID)(1 Sided Friction) 2010-Up	5	
211126C	Friction, A6GF1 3-5/Reverse Clutch (.099")(27 Teeth)(4.370"ID)(1 Sided Friction) 2012-Up	4	
211126D	Friction, 6F24 3-5/Reverse Clutch (.099")(27 Teeth)(4.575"ID)(1 Sided Friction) 2013-Up	4	
211134A	Steel, A6MF2 Low/Reverse Clutch (.048")(15 Teeth)(6 1/4"ID) 2010-Up	5	
211134C	Steel, A6GF1 Low/Reverse Clutch (.040")(15 Teeth)(5.973"ID) 2012-Up	5	
211134D	Steel, 6F24 Low/Reverse Clutch (.040")(15 Teeth)(6 1/4"ID) 2013-Up	5	
211139A	Steel Module, A6MF1 2009-Up	1	STMHYUND06
211139B	Steel Module, A6LF2 2009-Up	1	
211139C	Steel Module, A6GF1 2009-Up	1	

PART #	PRESSURE PLATES	QTY	REFERENCE #
211140A	Pressure Plate, A6MF2/6F24 Overdrive Clutch (.115")(27 Teeth)(5.275"ID) 2010-Up	1	
211140C	Pressure Plate, A6GF1 Overdrive Clutch (.093")(27 Teeth)(5.275"ID) 2012-Up	1	
211142A	Pressure Plate, A6MF2/6F24 Underdrive Clutch (.099")(7 Teeth)(Stepped)(5.835"ID) 2010-Up	1	
211142C	Pressure Plate, A6GF1 Underdrive Clutch (.088")(7 Teeth)(Stepped)(5.565"ID) 2012-Up	1	
211144A	Pressure Plate, A6MF2/6F24 2-6 Clutch (.098")(7 Teeth)(Stepped) 2010-Up	1	
211144C	Pressure Plate, A6GF1 2-6 Clutch (.099")(7 Teeth)(Stepped)(5.915"ID) 2012-Up	1	
211145AA	Apply Plate, A6MF2/6F24 2-6 Clutch (.075")(7 Teeth)(6.220"ID) 2010-Up	1	45683-3B619
211145AB	Apply Plate, A6MF2/6F24 2-6 Clutch (.083")(7 Teeth)(6.220"ID) 2010-Up (Also Fits 6F24 2-6 Clutch #124 2013-Up, Takes 3)	1-3	45683-3B621
211145AC	Apply Plate, A6MF2/6F24 2-6 Clutch (.090")(7 Teeth)(6.220"ID) 2010-Up	1	45683-3B623
211145AD	Apply Plate, A6MF2/6F24 2-6 Clutch (.098")(7 Teeth)(6.220"ID) 2010-Up	1	45683-3B625
211145AE	Apply Plate, A6MF2/6F24 2-6 Clutch (.106")(7 Teeth)(6.220"ID) 2010-Up	1	45683-3B627
211145AF	Apply Plate, A6MF2/6F24 2-6 Clutch (.114")(7 Teeth)(6.220"ID) 2010-Up	1	45683-3B629
211145AG	Apply Plate, A6MF2/6F24 2-6 Clutch (.122")(7 Teeth)(6.220"ID) 2010-Up	1	45683-3B631
211145CA	Apply Plate, A6GF1 2-6 Clutch (.075")(7 Teeth)(5.915"ID) 2012-Up	1	45683-3B619
211145CB	Apply Plate, A6GF1 2-6 Clutch (.083")(7 Teeth)(5.915"ID) 2012-Up	1	45683-3B621
211145CC	Apply Plate, A6GF1 2-6 Clutch (.090")(7 Teeth)(5.915"ID) 2012-Up	1	45683-3B623
211145CD	Apply Plate, A6GF1 2-6 Clutch (.098")(7 Teeth)(5.915"ID) 2012-Up	1	45683-3B625
211145CE	Apply Plate, A6GF1 2-6 Clutch (.106")(7 Teeth)(5.915"ID) 2012-Up	1	45683-3B627
211145CF	Apply Plate, A6GF1 2-6 Clutch (.114")(7 Teeth)(5.915"ID) 2012-Up	1	45683-3B629
211145CG	Apply Plate, A6GF1 2-6 Clutch (.122")(7 Teeth)(5.915"ID) 2012-Up	1	45683-3B631
211146A	Pressure Plate, A6MF2/6F24 3-5/Reverse Clutch (.095")(25 Teeth)(Stepped)(4.575"ID) 2010-Up	1	
211146C	Pressure Plate, A6GF1 3-5/Reverse Clutch (.095")(27 Teeth)(Stepped)(4.380"ID) 2012-Up	1	
211154A	Pressure Plate, A6MF2 Low/Reverse Clutch (.175")(15 Teeth)(6 1/4"ID) 2010-Up	1	
211154C	Pressure Plate, A6GF1 Low/Reverse Clutch (.160")(15 Teeth)(6"ID) 2012-Up	1	
211154D	Pressure Plate, 6F24 Low/Reverse Clutch (.158")(15 Teeth)(6 1/4"ID) 2013-Up	1	
211155AA	Apply Plate, A6MF2 Low/Reverse Clutch (Selective Thickness)(7 1/8"OD) 2012-Up	1	
211155CA	Apply Plate, A6GF1 Low/Reverse Clutch (.114")(15 Teeth)(5.972"ID) 2012-Up	1	45649-3B629
211155CB	Apply Plate, A6GF1 Low/Reverse Clutch (.122")(15 Teeth)(5.972"ID) 2012-Up	1	45649-3B629
211155CC	Apply Plate, A6GF1 Low/Reverse Clutch (.130")(15 Teeth)(5.972"ID) 2012-Up	1	45649-3B623
211155CD	Apply Plate, A6GF1 Low/Reverse Clutch (.138")(15 Teeth)(5.972"ID) 2012-Up	1	45649-3B635
211155CE	Apply Plate, A6GF1 Low/Reverse Clutch (.146")(15 Teeth)(5.972"ID) 2012-Up	1	45649-3B637
211155CF	Apply Plate, A6GF1 Low/Reverse Clutch (.154")(15 Teeth)(5.972"ID) 2012-Up	1	45649-3B639
211155DA	Apply Plate, 6F24 Low/Reverse Clutch (Selective)(15 Teeth)(6 1/4"ID) 2013-Up	1	

PART #	VALVE BODY KITS	QTY	REFERENCE #
T211165A	Shift Kit, A6MF/A6GF/A6LF (Must use with A4A6-RV-TK Tool Kit) (TransGo)	1	
T-A4A6-RV-TK	Tool Kit, Reducing Valve Reamer and Guide (For T211165A)	1	

PART #	SEALING RINGS	QTY	REFERENCE #
211179AT	Sealing Ring, A6MF2/6F24 Stator (.078" Thick)92.235"OD)(Teflon) 2010-Up	2	
211179CT	Sealing Ring, A6GF1 Stator (.078" Thick)(2.045"OD)(Teflon) 2012-Up	2	46194-3B600
211183AT	Sealing Ring, A6MF2/6F24 Input Shaft (.085" Thick)(1.020"OD)(Teflon) 2010-Up	2	

© Whatever It Takes Transmission Parts. Inc.

PART #	SEALING RINGS (Continued)	QTY	REFERENCE #
211183CT	Sealing Ring, A6GF1 Input Shaft (.088" Thick)(.935"OD)(Teflon) 2012-Up	2	45752-3B600
211185AT	Sealing Ring, A6GF1/A6MF2/6F24 Rear Cover (.079"Thick)(2.005"OD)(Teflon) 2010-Up	2	45295-23000

PART #	WASHERS AND BEARINGS	QTY	REFERENCE #
211211AA	Washer, A6MF2 Pump To 3-5/Reverse Drum (Black Plastic)(.173"Thick)(1.935"OD)(1.485"ID) (3 Round Tabs) 2010-Up	1	
211211AB	Washer, A6MF2 Pump To 3-5/Reverse Drum (Black Plastic)(.182"Thick)(1.935"OD)(1.485"ID) (3 Round Tabs) 2010-Up	1	
211211AC	Washer, A6MF2 Pump To 3-5/Reverse Drum (Black Plastic)(.189"Thick)(1.935"OD)(1.485"ID) (3 Round Tabs) 2010-Up	1	
211211AD	Washer, A6MF2 Pump To 3-5/Reverse Drum (Black Plastic)(.197"Thick)(1.935"OD)(1.485"ID) (3 Round Tabs) 2010-Up	1	
211211AE	Washer, A6MF2 Pump To 3-5/Reverse Drum (Black Plastic)(.205"Thick)(1.935"OD)(1.485"ID) (3 Round Tabs) 2010-Up	1	
211211AF	Washer, A6MF2 Pump To 3-5/Reverse Drum (Black Plastic)(.212"Thick)(1.935"OD)(1.485"ID) (3 Round Tabs) 2010-Up	1	
211211CA	Washer, A6GF1 Pump To 3-5/Reverse Drum (Black Plastic)(.087"Thick)(1.795"OD)(1.320"ID) (3 Round Tabs) 2012-Up	1	
211211DA	Washer, 6F24 Pump To 3-5/Reverse Drum (Black Plastic)(.095"Thick)(1.925"OD)(1.485"ID) (3 Round Tabs) 2013-Up	1	
211214A	Bearing W/Race, A6GF1/A6MF2 Overdrive Drum To Rear Cover (.130" Thick)(3.176"OD) (2.570"ID) 2010-Up	1	45851-3B000
211214D	Bearing W/Race, 6F24 Overdrive Drum To Rear Cover (.130" Thick)(3.145"OD)(2.570"ID) 2013-Up	1	
211215AA	Race, A6GF1/A6MF2/6F24 Overdrive Drum To Rear Cover (.055" Thick)(3.108"OD)(2.675"ID) 2010-Up	1	45853-3B214
211215AB	Race, A6GF1/A6MF2/6F24 Overdrive Drum To Rear Cover (.059" Thick)(3.108"OD)(2.675"ID) 2010-Up	1	45853-3B215
211215AC	Race, A6GF1/A6MF2/6F24 Overdrive Drum To Rear Cover (.063" Thick)(3.108"OD)(2.675"ID) 2010-Up	1	45853-3B216
211215AD	Race, A6GF1/A6MF2/6F24 Overdrive Drum To Rear Cover (.067" Thick)(3.108"OD)(2.675"ID) 2010-Up	1	45853-3B217
211215AE	Race, A6GF1/A6MF2/6F24 Overdrive Drum To Rear Cover (.071" Thick)(3.108"OD)(2.675"ID) 2010-Up	1	45853-3B218
211215AF	Race, A6GF1/A6MF2/6F24 Overdrive Drum To Rear Cover (.075" Thick)(3.108"OD)(2.675"ID) 2010-Up	1	45853-3B219
211215AG	Race, A6GF1/A6MF2/6F24 Overdrive Drum To Rear Cover (.079" Thick)(3.108"OD)(2.675"ID) 2010-Up	1	45853-3B220
211215AH	Race, A6GF1/A6MF2/6F24 Overdrive Drum To Rear Cover (.083" Thick)(3.108"OD)(2.675"ID) 2010-Up	1	45853-3B221
211215AJ	Race, A6GF1/A6MF2/6F24 Overdrive Drum To Rear Cover (.087" Thick)(3.108"OD)(2.675"ID) 2010-Up	1	45853-3B222
211215AK	Race, A6GF1/A6MF2/6F24 Overdrive Drum To Rear Cover (.091" Thick)(3.108"OD)(2.675"ID) 2010-Up	1	45853-3B223
211216A	Race, A6MF2/6F24 Overdrive Sun Gear To Overdrive Drum (.046" Thick)(1.450"OD)(.932"ID) 2010-Up	1	
211216C	Race, A6GF1 Overdrive Sun Gear To Overdrive Drum (.046" Thick)(1.352"OD)(.838"ID) 2012-Up	1	
211217A	Bearing W/Race, A6MF2/6F24 Overdrive Sun Gear To Overdrive Drum (.175" Thick)(1.445"OD) (.850"ID) 2010-Up	1	
211217C	Bearing W/Race, A6GF1 Overdrive Sun Gear To Overdrive Drum (.175"Thick)(1.365"OD) (.760"ID) 2012-Up	1	
211218A	Caged Needle Bearing, A6MF2/6F24 Overdrive Planet (Rear)(.410" Wide)(1.818"OD)(1.652"ID) 2010-Up	1	
211218C	Caged Needle Bearing, A6GF1 Overdrive Planet (Rear)(.372" Wide)(1.664"OD)(1.494"ID) 2012-Up	1	
211219A	Bearing W/Races, A6MF2/6F24 3-5/Reverse Hub (.142"Thick)(1.765"OD) 2010-Up	1	
211219C	Bearing W/Races, A6GF1 3-5/Reverse Drum To 2-6/3-5/Reverse Hub (.142"Thick)(1.705"OD) 2012-Up	1	45798-3B600
211220AA	Washer, A6GF1/A6MF2/6F24 Overdrive Planet To Overdrive Drum (.118" Thick)(2.350"OD) (3 Tab, Plastic) 2010-Up	1	45729-3B630
211220AB	Washer, A6GF1/A6MF2/6F24 Overdrive Planet To Overdrive Drum (.126" Thick)(2.350"OD) (3 Tab, Plastic) 2010-Up	1	45729-3B632
211220AC	Washer, A6GF1/A6MF2/6F24 Overdrive Planet To Overdrive Drum (.134" Thick)(2.350"OD) (3 Tab, Plastic) 2010-Up	1	45729-3B634
211220AD	Washer, A6GF1/A6MF2/6F24 Overdrive Planet To Overdrive Drum (.142" Thick)(2.350"OD) (3 Tab, Plastic) 2010-Up	1	45729-3B636

© Whatever It Takes Transmission Parts. Inc.

211220AE.....Washer, A6GF1/A6MF2/6F24 Overdrive Planet To Overdrive Drum (.150" Thick)(2.350"OD)
.....(3 Tab, Plastic) 2010-Up.....1.....45729-3B638
211220AF.....Washer, A6GF1/A6MF2/6F24 Overdrive Planet To Overdrive Drum (.158" Thick)(2.350"OD)
.....(3 Tab, Plastic) 2010-Up.....1.....45729-3B640
211220AG.....Washer, A6GF1/A6MF2/6F24 Overdrive Planet To Overdrive Drum (.166" Thick)(2.350"OD)
.....(3 Tab, Plastic) 2010-Up.....1.....45729-3B642
211220AH.....Washer, A6GF1/A6MF2/6F24 Overdrive Planet To Overdrive Drum (.174" Thick)(2.350"OD)
.....(3 Tab, Plastic) 2010-Up.....1.....45729-3B644
211220AJ.....Washer, A6GF1/A6MF2/6F24 Overdrive Planet To Overdrive Drum (.182" Thick)(2.350"OD)
.....(3 Tab, Plastic) 2010-Up.....1.....45729-3B646
211221A.....Washer, A6GF1/A6MF2/6F24 2-6/3-5/Reverse Hub To Underdrive Hub (Black Plastic)
.....(.087" Thick)(2.577"OD)(2.135"ID)(2 Tab) 2010-Up.....1.....45686-3B000
211223A.....Caged Needle Bearing, A6GF1/A6MF2/6F24 Rear Cover (Inner)(.585" Wide)(.865"OD)
.....(.630"ID) 2010-Up.....1.....43275-3B000
211246A.....Race, A6MF2/6F24 Output Sun Gear To Overdrive Sun Gear (.121" Thick)(1.722"OD)
.....(1.220"ID) 2010-Up.....1.....
211246C.....Race, A6GF1 Output Sun Gear To Overdrive Sun Gear (.094" Thick)(1.680"OD)(1.140"ID)
.....2012-Up.....1.....
211247A.....Bearing W/Race, A6MF2/6F24 Output Sun Gear To Overdrive Sun Gear (.118"Thick)
.....(1.860"OD)(1.300"ID) 2010-Up.....1.....
211247C.....Bearing W/Race, A6GF1 Output Sun Gear To Overdrive Sun Gear (.145"Thick)(1.815"OD)
.....(1.210"ID) 2012-Up.....1.....45761-3B600
211248A.....Washer, A6MF2/6F24 Output Planet To Overdrive Planet (.213" Thick)(2.515"OD)(1.960"ID)
.....(2 Tab) 2010-Up.....1.....
211248C.....Washer, A6GF1 Output Planet To Overdrive Planet (.213" Thick)(2.445"OD)(1.890"ID)(2 Tab)
.....2012-Up.....1.....45777-3B600
211251A.....Use 211254A.....
211251C.....Bearing W/Race, A6GF1 Drive Transfer Gear To Output Planet (.110" Thick)(2.824"OD)
.....(2.320"ID)(60 Needles) 2012-Up.....1.....
211252A.....Race, A6MF2/6F24 Drive Transfer Gear To Output Planet (.086" Thick)(2.930"OD)(2.360"ID)
.....2010-Up.....1.....
211252C.....Race, A6GF1 Drive Transfer Gear To Output Planet (.086" Thick)(2.845"OD)(2.275"ID)
.....2012-Up.....1.....
211254A.....Bearing W/Race, A6MF2/6F24 Drive Transfer Gear To Output Planet (.110" Thick)(2.905"OD)
.....(2.420"ID)(62 Needles) 2010-Up.....
.....(Also Fits A6MF2/6F24 #251 2010-Up).....1-2.....
211254C.....Bearing W/Race, A6GF1 Drive Transfer Gear To Output Planet (.110" Thick)(2.825"OD)
.....(2.350"ID)(20 Needles) 2012-Up.....1.....45748-3B600
211273A.....Cup Race, A6MF2 Pinion To Bell Housing (2.953"OD)(2.495"ID)(Cast # M0606.1115.24)
.....2010-Up.....1.....
211273C.....Cup Race, A6GF1 Pinion To Bell Housing (2.795"OD)(2.330"ID)(Cast # F-667744.THT.DY-W61C)
.....2012-Up.....1.....
211273D.....Cup Race, 6F24 Pinion To Bell Housing (2.953"OD)(2.505"ID)(Cast # E1030-1438-11) 2013-Up.1.....
211274A.....Cone Bearing, A6MF2 Pinion To Bell Housing (23 Rollers)(1.770"ID)(Cast # E1031-0611-10)
.....2010-Up.....1.....
211274C.....Cone Bearing, A6GF1 Pinion To Bell Housing (22 Rollers)(1.615"ID)(Cast # F-567744 TRI DYW6)
.....2012-Up.....1.....
211274D.....Cone Bearing, 6F24 Pinion To Bell Housing (20 Rollers)(1.770"ID)(Cast # F577011.01.TR1)
.....2013-Up.....1.....
211277AA.....Shim, A6MF2 Pinion To Bell Housing (Selective)(2.925"OD)(2.575"ID) 2010-Up.....1.....
211277CA.....Shim, A6GF1 Pinion To Bell Housing (Selective)(2.770"OD)(2.400"ID) 2012-Up.....1.....
211277DA.....Shim, 6F24 Pinion To Bell Housing (Selective)(2.930"OD)(2.575"ID) 2013-Up.....1.....
211279A.....Roller Bearing, A6MF2/6F24 Drive Transfer Gear To Support (40 Rollers)(2.595"ID) 2010-Up.....2.....
211279C.....Roller Bearing, A6GF1 Drive Transfer Gear To Support (43 Rollers)(2.480"ID) 2012-Up.....2.....
211280A.....Cup Race, A6MF2 Pinion To Case (.668" Thick)(2.560"OD)(Cast # E1104-0119-08) 2010-Up.....1.....
211280C.....Cup Race, A6GF1 Pinion To Case (.668" Thick)(2.440"OD)(Cast # HR 33007J) 2012-Up.....1.....
211280D.....Cup Race, 6F24 Pinion To Case (.668" Thick)(2.560"OD)(Cast # F577102.01.TR1) 2013-Up.....1.....
211281A.....Cone Bearing, A6MF2 Pinion To Case (22 Rollers)(1.375"ID)(Cast # TR356521HL) 2010-Up.....1.....
211281C.....Cone Bearing, A6GF1 Pinion To Case (20 Rollers)(1.300"ID)(Cast # R33-8) 2012-Up.....1.....
211281D.....Cone Bearing, 6F24 Pinion To Case (20 Rollers)(1.375"ID)(Cast # H0602-0652-28) 2013-Up.....1.....
211287A.....Lock Washer, A6MF2/6F24 Underdrive Transfer Gear Nut (28 Outer Tans, 2 Inner Tabs)
.....(3.420"OD)(2.550"ID) 2010-Up.....1.....
211287C.....Lock Washer, A6GF1 Underdrive Transfer Gear Nut (28 Outer Tabs, 2 Inner Tabs)(3.205"OD)
.....(2.485"ID) 2012-Up.....1.....45817-3B600
211288A.....Use 211291A.....1.....
211288C.....Use 211291C.....1.....
211289A.....Use 211292A.....1.....
211289C.....Use 211292C.....1.....
211289D.....Use 211292D.....1.....
211290AA.....Shim, A6MF2 Differential To Bell Housing (Selective)(3.322"OD)(1.885"ID) 2010-Up.....1.....

© Whatever It Takes Transmission Parts. Inc.

PART #	WASHERS AND BEARINGS (Continued)	QTY	REFERENCE #
211290CA	Shim, A6GF1/6F24 Differential TO Bell Housing (Selective)(3.105”OD)(1.770”ID) 2012-Up	1	
211291A	Cup Race, A6MF2 Differential To Bell Housing (3.350”OD)(Cast # Korea 806149) 2010-Up		
	(Also Fits A6MF2 #288 32010-Up)	1-2	
211291C	Cup Race, A6GF1/6F24 Differential To Bell Housing (3.150”OD)(Cast # NSX R50.628D)		
	2012-Up		
	(Also Fits A6GF1/6F24 #288 2012-Up)	1-2	
211292A	Cone Bearing, A6MF2 Differential To Bell Housing (21 Rollers)(.818” Thick)(2.165”ID)		
	2010-Up (Also Fits A6MF2 #289 2010-Up)	1-2	
211292C	Cup Race, A6GF1 Differential To Bell Housing (22 Rollers)(.770” Thick)(1.968”ID) 2012-Up		
	(Also Fits A6GF1 #289 2012-Up)	1-2	
211292D	Cup Race, 6F24 Differential To Bell Housing (21 Rollers)(.770” Thick)(1.968”ID) 2013-Up		
	(Also Fits 6F24 #289 2013-Up)	1-2	
211294A	Caged Needle Bearing, A6GF1/A6MF2/6F24 Manual Shaft To Case (.470” Wide)(.788”OD)		
	2010-Up	1	

PART #	GASKETS AND SEALING RINGS	QTY	REFERENCE #
211300BF-1	Gasket, A6LF/A6LF2/A6LF3 (Hyundai/Kia)(Duraprene) 2009-Up (Does Not Fit Hybrid)	1	
211301CW	Gasket, A6GF1 Side Pan (Molded Rubber) 2012-Up	1	
211301DW	Gasket, 6F24 Side Pan (Molded Rubber) 2013-Up	1	
211311A	O-Ring, A6GF1/A6MF2/6F24 Pump Body (6.100”OD) 2010-Up	1	46158-3B600

PART #	ELECTRICAL COMPONENTS	QTY	REFERENCE #
211410A	Neutral Safety Switch, A6MF2 (5 Blade Rectangle Connector)(2 Bolt) 2010-Up	1	
211410C	Neutral Safety Switch, A6GF1 (7 Blade Rectangle Connector)(2 Bolt)(Bow Tie Shaped Body)		
	2012-Up	1	42700-3B000
211410D	Neutral Safety Switch, 6F24 (7 Blade Rectangle Connector)(2 Bolt)(Round Shaped Body)		
	2013-Up	1	
211420AK	Solenoid Kit, A6MF/A6LF (Hyundai/Kia)(6 Speed) 2009-13 (Includes 8 Solenoids & Temperature		
	Sensor)(Teckpak)	1	
211421A	Solenoid, A6GF/A6LF/A6MF (SS-A & SS-B) 2009-Up	1-2	
211425A	Solenoid, A6MF/A6LF (TCC & 2-6 Clutch) 2009-13	1-2	
211425C	Solenoid, A6GF (TCC) 2009-13	1	
211427A	Solenoid, A6GF/A6LF/A6MF (3-5-Reverse, Underdrive & Overdrive) 2009-13	1-3	
211428A	Solenoid, A6GF/A6LF/A6MF (Line Pressure) 2009-Up	1	
211436A	Sensor, A6MF2 Input/Output (Blue Input, Black Output) 2010-Up	1	
211436AB	Sensor, A6GF/A6MF Speed 2009-Up	1	
211436C	Sensor, A6GF1 Input/Output (Blue Input, Yellow Output) 2012-Up	1	42620-3B620
211436D	Sensor, A6MF2 Input/Output (Blue Input, Black Output) 2013-Up	1	
211437A	Sensor, A6GF/A6LF/A6MF Temperature (TOT) 2009-Up	1	
211446A	Wire Harness, A6MF1/A6MF2 Internal (16 Pin Black Case Connector)(Includes Temperature		
	Sensor) 2010-Up	1	
211446B	Wire Harness, A6LF1 Internal (Gray Connector)(Includes Temperature Sensor) 2009-Up	1	
211446C	Wire Harness, A6GF1 Internal (16 Pin Brown Case Connector) (Includes Temperature Sensor)		
	2012-Up	1	46307-3B650
211446D	Wire Harness, 6F24 Internal (16 Pin Black Connector)(Includes Temperature Sensor) 2013-Up	1	
211750C	Solenoid, A6GF (2-6 Clutch) 2009-13	1	

PART #	HARDPARTS	QTY	REFERENCE #
211510A	Pump Body W/Gears, A6MF2/6F24 (Cast Iron)(6 5/16”OD)(9 Teeth Inner & 10 Teeth Outer Gear)		
	(B Casting)(Bushing Type) 2010-Up	1	
211510AA	Pump Body W/Gears, A6MF2 (9 Teeth Inner & 10 Teeth Outer Gear) (Needle Bearing Type)		
	(BA Casting) 2012-Up	1	
211510C	Pump Body W/Gears, A6GF1 (Cast Iron)(6 1/16”OD) (9 Teeth Inner Gear & 10 Teeth Outer Gear)		
	(Bushing Type) 2010-Up	1	
211520A	Stator, A6MF2/6F24 (6 3/4”OD 2-6 Clutch Piston)(2.220”OD Ring Tower) 2010-Up	1	
211520C	Stator, A6GF1 (6 1/2”OD 2-6 Clutch Piston)(2.070”OD Ring Tower) 2012-Up	1	
211530A	Pump Gear Set, A6GF1/A6MF2/6F24 (.445” Thick)(3.533”OD)(9 Teeth Inner & 10 Teeth Outer		
	Gear) 2010-Up	1	
211550A	Drum, A6MF2/6F24 Overdrive Clutch Retainer (2.005”ID Ring Bore)(25 Teeth Sun Gear,		
	1.610”OD) 2010-Up	1	
211550C	Drum, A6GF1 Overdrive Clutch Retainer (2.005”ID Ring Bore)(25 Teeth Sun Gear, 1.465”OD)		
	2012-Up	1	45514-3B852
211551A	Clutch Housing, A6MF2/6F24 Underdrive Clutch Retainer (7” OD, Steel) 2010-Up	1	
211551C	Clutch Housing, A6GF1 Underdrive Clutch Retainer (6 3/4”OD, Steel) 2012-Up	1	45615-3B800

© Whatever It Takes Transmission Parts. Inc.

211555A.....Drum W/Shaft, A6MF2 3-5/Reverse Clutch Retainer (13 3/8" Long Shaft)(2.237"ID Ring Bore)
.....(12 Oval Holes) 2010-Up .....1 .....
211555C .....Drum W/Sahft, A6GF1 3-5/Reverse Clutch Retainer (12 7/8" Long Shaft)(2.080"ID Ring Bore)
.....(36 Oval Holes) 2012-Up .....1 .....45414-3B800
211555D .....Drum W/Shaft, 6F24 3-5/Reverse Clutch Retainer (12 7/8" Long Shaft)(2.237"ID Ring Bore)
.....(12 Oval Holes) 2013-Up .....1 .....
211570A.....Hub, A6MF2/6F24 Overdrive/Low/Reverse Clutch (2.960" Tall) 2010-Up .....1 .....
211570C .....Hub, A6GF1 Overdrive/Low/Reverse Clutch (2.770" Tall) 2012-Up.....1 .....45690-3B800
211571A.....Hub, A6MF2/6F24 Underdrive Clutch (5.225"OD)(36 Square Holes) 2010-Up .....1 .....
211571C .....Hub, A6GF1 Underdrive Clutch (5.003"OD)(36 Round Holes) 2012-Up.....1 .....45620-3B600
211575A.....Hub, A6MF2 2-6/3-5/Reverse Clutch (6.090"OD)(1.740"Thick Through The Center)(28 Inner
.....Splines) 2010-Up .....1 .....
211575C .....Hub, A6GF1 2-6/3-5/Reverse Clutch (5.775"OD)(1.550" Thick Through The Center)(26 Inner
.....Splines) 2012-Up .....1 .....45456-3B800
211575D .....Hub, 6F24 2-6/3-5/Reverse Clutch (6.090"OD)(1.540" Thick Through The Center)(28 Inner
.....Splines) 2013-Up .....1 .....
211580A.....Planet, A6MF2/6F24 Overdrive (9 Gear)(4.624"OD Of Housing) 2010-Up.....1 .....
211580C .....Planet, A6GF1 Overdrive (9 Gear)(4.310"OD OF Housing) 2012-Up.....1 .....45760-3B851
211584A.....Planet, A6MF2/6F24 Output (5 Gear)(Uses A 32 Teeth Sun Gear #614)(1.645"ID Of Snout)
.....2010-Up .....1 .....
211584C .....Planet, A6GF1 Output (5 Gear)(Uses a 31 Teeth Sun Gear #614)(1.565"ID Of Snout) 2012-Up...1 .....45710-3B800
211590A.....Ring Gear, A6MF2/6F24 Overdrive Planet (77 Teeth)(1.270" Thick) 2010-Up.....1 .....
211590C .....Ring Gear, A6GF1 Overdrive Planet (79 Teeth)(1.215" Thick) 2012-Up .....1 .....45796-3B850
211594A.....Ring Gear, A6MF2/6F24 Output Planet (83 Teeth)(2.435"ID) 2010-Up .....1 .....
211594C .....Ring Gear, A6GF1 Output Planet (83 Teeth)(2.350"ID) 2012-Up.....1 .....45780-3B800
211610A.....Sun Gear, A6MF2/6F24 Overdrive Planet (26 Teeth)(1.210"OD Of Shaft)(5.280" Long) 2010-Up.1 .....
211610C .....Sun Gear, A6GF1 Overdrive Planet (25 Teeth)(1.135"OD Of Shaft)(5.170" Long) 2012-Up .....1 .....45790-3B800
211614A.....Sun Gear, A6MF2/6F24 Output Planet (32 Teeth)(1.567"OD Of Shaft) 2010-Up .....1 .....
211614C .....Sun Gear, A6GF1 Output Planet (31 Teeth)(1.490"OD Of Shaft) 2012-Up.....1 .....45701-3B800

PART #	SPRAGS AND ONE WAY CLUTCHES	QTY	REFERENCE #

211652A.....Sprag, A6MF2/6F24 Low/Reverse With 13 Lug Outer Race (.865" Thick)(20 Elements) 2010-Up 1 .....
211652C .....Sprag, A6GF1 Low/Reverse With 11 Lug Outer Race (.775" Thick)(20 Elements) 2012-Up.....1 .....

PART #	HARDPARTS (Continued)	QTY	REFERENCE #

211698-1A .....Oil Guide, A6MF2 (1 Bolt)(Sets Inside Case, Front)(Cast # 800) 2010-Up.....1 .....
211698-1C .....Oil Guide, A6GF1 (1 Bolt)(Sets Inside Case, Front)(Cast # 260) 2012-Up.....1 .....43274-3B800
211698-1D .....Oil Guide, 6F24 (1 Bolt)(Sets Inside Case, Front)(Cast # XC) 2013-Up.....1 .....
211698A.....Oil Guide, A6MF2 (3 Bolts To Bell)(Cast # 800) 2010-Up .....1 .....
211698C .....Oil Guide, A6GF1 (3 Bolts To Bell)(Cast # 260) 2012-Up .....1 .....43243-3B800
211698D .....Oil Guide, 6F24 (3 Bolts To Bell)(Cast # 650) 2013-Up .....1 .....
211699-1A .....Oil Guide, A6MF2/6F24 Overdrive Planet (Front)(Black Plastic)(3.474"OD)(3 Half Round Tabs)
.....2010-Up .....1 .....
211699-1C .....Oil Guide, A6GF1 Overdrive Planet (Front)(Black Plastic)(3.235"OD)(3 Half Round Tabs)
.....2012-Up .....1 .....45778-3B600
211699-2A .....Oil Guide, A6MF2/6F24 Overdrive Planet (Rear)(White Plastic)(1.778" Long)(21 Round Tabs)
.....2010-Up .....3 .....
211699-2C .....Oil Guide, A6GF1 Overdrive Planet (Rear)(Black Plastic)(1.454" Long)(2 Round Tabs) 2012-Up .3 .....45888-3B651
211699A.....Oil Guide, A6MF2/6F24 Output Planet (Front)(Black Plastic)(3.698"OD)(5 Round Tabs)
.....2010-Up .....1 .....
211699C .....Oil Guide, A6GF1 Output Planet (Front)(Black Plastic)(3.612"OD)(5 Round Tabs) 2012-Up .....1 .....43708-3B601
211710A.....Gear, A6MF2 Drive Transfer (47 Teeth)(2 Groove)(.840" Thick)(5.150"OD) 2010-Up .....1 .....
211710C .....Gear, A6GF1 Drive Transfer (52 Teeth)(2 Groove)(.775" Thick)(5.140"OD) 2012-Up .....1 .....45811-3B800
211710D .....Gear, 6F24 Drive Transfer (50 Teeth)(5 Groove)(.930" Thick)(5.385"OD) 2013-Up .....1 .....
211711A.....Support, A6MF2/6F24 Drive Transfer Gear (Steel)(7"OD) 2010-Up.....1 .....
211711C .....Support, A6GF1 Drive Transfer Gear (Steel)(6 3/4"OD) 2012-Up .....1 .....45864-3B600
211712A.....Gear, A6MF2 Driven Transfer (51 Teeth)(2 Groove)(.840" Thick)(5.530"OD) 2010-Up .....1 .....
211712C .....Gear, A6GF1 Driven Transfer (49 Teeth)(1 Groove)(.785" Thick)(4.860"OD) 2012-Up .....1 .....
211712D .....Gear, 6F24 Driven Transfer (49 Teeth)(5 Groove)(.913" Thick)(5.285"OD) 2013-Up .....1 .....
211716A.....Differential Housing, A6MF2 (8 Bolt)(Uses 21 Roller Bearings) 2010-Up.....1 .....
211716AA.....Differential Housing, S6MF1 (10 Bolt)(Uses 26 Roller Bearings) 2010-Up.....1 .....
211716C .....Differential Housing, A6GF1 (8 Bolt)(Uses 22 Roller Bearings) 2012-Up .....1 .....
211716D .....Differential Housing, 6F24 (12 Bolt)(Uses 26 Roller Bearings) 2013-Up .....1 .....
211720A.....Ring Gear, A6MF2 Differential (53 Teeth)(2 Groove)(8 Bolt) 2010-Up.....1 .....
211720C .....Ring Gear, A6GF1 Differential (53 Teeth)(3 Groove)(8 Bolt) 2012-Up.....1 .....45832-3B820
211720D .....Ring Gear, 6F24 Differential (53 Teeth)(3 Groove)(12 Bolt) 2013-Up.....1 .....
211730A.....Pinion, A6MF2 (18 Teeth)(2 Groove)(5.640" Long)(2.787"OD) 2010-Up .....1 .....
211730C .....Pinion, A6GF1 (17 Teeth)(4 Groove)(5.680" Long)(2.530"OD) 2012-Up .....1 .....

© Whatever It Takes Transmission Parts. Inc.

PART #	HARDPARTS (Continued)	QTY	REFERENCE #
211730D	Pinion, 6F24 (18 Teeth)(3 Groove)(5.945” Long)(2.885”OD) 2013-Up	1	
211740A	Valve Body, A6MF2 (8 Solenoid)(Cast # KN-3) 2010-Up	1	
211740C	Valve Body, A6GF1 (8 Solenoid)(Cast # A6MF #5; DN-9) 2013-Up	1	46210-3B611
211740D	Valve Body, 6F24 (8 Solenoid)(Cast # SK9 & SK12) 2013-Up	1	

PART #	VALVE BODY PARTS	QTY	REFERENCE #
S211741AP-1	Valve, A6GF1/A6LF1/A6LF2/A6LF3/A6MF1/A6MF2 Pressure Reducing (Oversized)(Sonnax) (Must Use T-F-102741-TL7)	1	102741-07
T-F-102741-TL7	Tool For A211741AP-1	1	F-102741-TL7

PART #	HARDPARTS (Continued)	QTY	REFERENCE #
211750A	Bell Housing, A6MF2 (Starter At 2:00)(Cast # A6MF2)(2.925”OD Axle Seal)(20 Bolts To Case) 2010-Up	1	
211750C	Bell Housing, A6GF1 (Starter At 2:00)(Cast # A6GF1)(2.560”OD Axle Seal)(2WD)(19 Bolts To Case) 2012-Up	1	45231-3B800
211750D	Bell Housing, 6F24 (Starter At 10:00)(Cast # 6F24)(2.640”OD Axle Seal)(2WD)(20 Bolts To Case) 2013-Up	1	
211759A	Rear Cover, A6MF2 (13 Bolt)(Cast # A6MF1) 2010-Up	1	
211759C	Rear Cover, A6GF1 (13 Bolt)(Cast # A6GF1) 2012-Up	1	45320-3B601
211759D	Rear Cover, 6F24 (13 Bolt)(Cast # 45320-P3B750 Powertech INZ1-1) 2013-Up	1	
211760A	Case, A6MF2 (20 Bolts To Bell)(Cast # A6MF2) 2010-Up	1	
211760C	Pan, A6GF1 Side (Plastic)(19 Bolt)(2.528”Deep) 2012-Up	1	45241-3B800
211760D	Case, 6F24 (20 Bolts To Bell)(Cast # 6F24) 2013-Up	1	
211766A	Pan, A6MF2 Side (Metal)(19 Bolt) 2010-Up (Round Dimples)(No Offset In The Gasket Surface)	1	
211766C	Pan, A6GF1 Side (Plastic)(19 Bolt)(2.528” Deep) 2012-Up(1 Threaded Boss At Top Left Corner)	1	45280-3B601
211766D	Pan, 6F24 Side (Plastic)(19 Bolt)(2.650”Deep) 2013-Up (One Offset In The Gasket Surface)	1	
211777AK	Bolt Set, A6GF1/A6MF2/6F24 Holds Pump To Stator To Case (Hex Head)(7 Pieces) 2010-Up	1	
211778AK	Bolt Set, A6GF1/A6MF2/6F24 Holds Pump Body To Stator (Torx Head)(8 Pieces) 2010-Up	1	
211780AK	Bolt Set, A6GF1/A6MF2 Holds Rear Cover To Case (13 Pieces) 2010-Up	1	
211780DK	Bolt Set, 6F24 Holds Rear Cover To Case (13 Pieces) 2013-Up	1	
211782AK	Bolt Set, A6GF1/A6MF2/6F24 Holds Valve Body To Case (Hex Head)(8 Pieces) 2010-Up	1	
211783AK	Bolt Set, A6GF1/A6MF2/6F24 Holds Underdrive Clutch Housing #551 To Case (Torx Head) (6 Pieces) 2010-Up	1	
211784AK	Bolt Set, A6GF1/A6MF2/6F24 Holds Underdrive Piston Housing #955 To Underdrive Clutch Housing #551 (Torx Head)(2 Pieces) 2010-Up	1	
211786AK	Bolt Set, A6MF2 Holds Ring Gear To Differential Housing (12 Pieces) 2010-Up	1	
211786CK	Bolt Set, A6GF1 Holds Ring Gear To Differential Housing (8 Pieces) 2012-Up	1	
211786DK	Bolt Set, 6F24 Holds Ring Gear To Differential Housing (8 Pieces) 2013-Up	1	
211788AK	Bolt Set, A6MF2 Holds Side Pan To Case (.685” Long)(Hex Head)(19 Pieces) 2010-Up	1	
211788CK	Bolt Set, A6GF1/6F24 Holds Side Pan To Case (1.335” Long)(Hex Head)(19 Pieces) 2010-Up	1	
211795A	Nut, A6MF2/6F24 Holds Drive Transfer Gear To Support # 711 (24 Notches)(3.325”OD) 2010-Up	1	
211795C	Nut, A6GF1 Holds Drive Transfer Gear To Support # 711 (24 Notches)(3.115”OD) 2010-Up	1	45819-3B600
211852A	Cushion, A6MF2/6F24 2-6 Clutch (.065”)(7 1/16”OD)(6 1/4”ID)(Wavy) 2010-Up	1	
211852C	Cushion, A6GF1 2-6 Clutch (.065”)(7 Teeth)(5 15/16”ID)(Wavy) 2013-Up	1	
211857A	Cushion, A6GF1/A6MF2 Low/Reverse Clutch (.063”)(No Teeth)(6 5/16”ID)(Wavy) 2010-Up	1	45644-3B600
211857D	Cushion, 6F24 Low/Reverse Clutch (.065”)(15 Teeth)(5 15/16”ID)(Wavy) 2013-Up	1	
211861AA	Snap Ring, A6GF1/A6MF2/6F24 Holds Overdrive Clutch Pressure Plate In (.067” Thick) (6 3/8”OD) 2010-Up	1	45525-3B617
211861AB	Snap Ring, A6GF1/A6MF2/6F24 Holds Overdrive Clutch Pressure Plate In (.074” Thick) (6 3/8”OD) 2010-Up	1	45525-3B619
211861AC	Snap Ring, A6GF1/A6MF2/6F24 Holds Overdrive Clutch Pressure Plate In (.083” Thick) (6 3/8”OD) 2010-Up	1	45525-3B621
211861AD	Snap Ring, A6GF1/A6MF2/6F24 Holds Overdrive Clutch Pressure Plate In (.091” Thick) (6 3/8”OD) 2010-Up	1	45525-3B623
211861AE	Snap Ring, A6GF1/A6MF2/6F24 Holds Overdrive Clutch Pressure Plate In (.098” Thick) (6 3/8”OD) 2010-Up	1	45525-3B625
211861AF	Snap Ring, A6GF1/A6MF2/6F24 Holds Overdrive Clutch Pressure Plate In (.106” Thick) (6 3/8”OD) 2010-Up	1	45525-3B627
211861AG	Snap Ring, A6GF1/A6MF2/6F24 Holds Overdrive Clutch Pressure Plate In (.114” Thick) (6 3/8”OD) 2010-Up	1	45525-3B629
211862A	Snap Ring, A6GF1/A6MF2/6F24 Holds Overdrive Clutch Spring Retainer In (.060” Thick) (1.465”OD) 2010-Up	1	45545-3B600
211864A	Snap Ring, A6MF2/6F24 Holds Underdrive Clutch Pressure Plate In (.083” Thick)(6 15/16”OD) 2010-Up	1	
211864C	Snap Ring, A6GF1 Holds Underdrive Clutch Pressure Plate In (.083” Thick)(6 3/4”OD) 2012-Up	1	

© Whatever It Takes Transmission Parts. Inc.

211865A.....Snap Ring, A6MF2/6F24 Holds Underdrive Clutch Spring Retainer In (.058" Thick)(3.940"OD)
.....2010-Up .....1 .....
211865C .....Snap Ring, A6GF1 Holds Underdrive Clutch Spring Retainer In (.059" Thick)(3.735"OD)
.....2012-Up .....1 .....45616-3B601
211867A.....Snap Ring, A6MF2/6F24 Holds Overdrive Planet Ring Gear To Output Planet Ring Gear
.....(.098" Thick)(5.750"OD) 2010-Up .....1 .....
211867C .....Snap Ring, A6GF1 Holds Overdrive Planet Ring Gear To Output Planet Ring Gear (.098" Thick)
.....(5.640"OD) 2012-Up .....1 .....
211868A.....Snap Ring, A6MF2/6F24 Holds Overdrive Planet To Overdrive/Low/Reverse Hub (.095" Thick)
.....(4.515"OD)(W/2 Bent Ends) 2010-Up .....1 .....
211868C .....Snap Ring, A6GF1 Holds Overdrive Planet To Overdrive/Low/Reverse Hub (.095" Thick)
.....(4.240"OD)(W/2 Bent Ends) 2012-Up .....1 .....
211871A.....Snap Ring, A6MF2/6F24 Holds 3-5/Reverse Clutch Spring Retainer In (.060" Thick)(2.570"OD)
.....2010-Up .....1 .....
211871C .....Snap Ring, A6GF1 Holds 3-5/Reverse Clutch Spring Retainer In (.060" Thick)(2.450"OD)
.....2012-Up .....1 .....45445-3B600
211874A.....Snap Ring, A6MF2/6F24 Holds 2-6 Clutch Spring Retainer In (.063" Thick)(6 1/8"OD) 2010-Up ..1 .....
211874C .....Snap Ring, A6GF1 Holds 2-6 Clutch Spring Retainer In (.063" Thick)(5 7/8"OD) 2012-Up.....1 .....45653-3B601
211878AA.....Snap Ring, A6MF2/6F24 Holds 3-5/Reverse Clutch Pressure Plate In (.062" Thick)(5.555"OD)
.....2010-Up .....1 .....45452-3B616
211878AB.....Snap Ring, A6MF2/6F24 Holds 3-5/Reverse Clutch Pressure Plate In (.071" Thick)(5.555"OD)
.....2010-Up .....1 .....45452-3B618
211878AC.....Snap Ring, A6MF2/6F24 Holds 3-5/Reverse Clutch Pressure Plate In (.078" Thick)(5.555"OD)
.....2010-Up .....1 .....45452-3B620
211878AD.....Snap Ring, A6MF2/6F24 Holds 3-5/Reverse Clutch Pressure Plate In (.086" Thick)(5.555"OD)
.....2010-Up .....1 .....45452-3B622
211878AE.....Snap Ring, A6MF2/6F24 Holds 3-5/Reverse Clutch Pressure Plate In (.094" Thick)(5.555"OD)
.....2010-Up .....1 .....45452-3B624
211878AF .....Snap Ring, A6MF2/6F24 Holds 3-5/Reverse Clutch Pressure Plate In (.102" Thick)(5.555"OD)
.....2010-Up .....1 .....45452-3B626
211878AG.....Snap Ring, A6MF2/6F24 Holds 3-5/Reverse Clutch Pressure Plate In (.110" Thick)(5.555"OD)
.....2010-Up .....1 .....45452-3B628
211878CA.....Snap Ring, A6GF1 Holds 3-5/Reverse Clutch Pressure Plate In (.063" Thick)(5.315"OD)
.....2012-Up .....1 .....45452-3B616
211878CB.....Snap Ring, A6GF1 Holds 3-5/Reverse Clutch Pressure Plate In (.071" Thick)(5.315"OD)
.....2012-Up .....1 .....45452-3B618
211878CC.....Snap Ring, A6GF1 Holds 3-5/Reverse Clutch Pressure Plate In (.079" Thick)(5.315"OD)
.....2012-Up .....1 .....45452-3B620
211878CD.....Snap Ring, A6GF1 Holds 3-5/Reverse Clutch Pressure Plate In (.087" Thick)(5.315"OD)
.....2012-Up .....1 .....45452-3B622
211878CE.....Snap Ring, A6GF1 Holds 3-5/Reverse Clutch Pressure Plate In (.094" Thick)(5.315"OD)
.....2012-Up .....1 .....45452-3B624
211878CF .....Snap Ring, A6GF1 Holds 3-5/Reverse Clutch Pressure Plate In (.102" Thick)(5.315"OD)
.....2012-Up .....1 .....45452-3B626
211878CG .....Snap Ring, A6GF1 Holds 3-5/Reverse Clutch Pressure Plate In (.110" Thick)(5.315"OD)
.....2012-Up .....1 .....45452-3B628
211884A.....Snap Ring, A6MF2/6F24 Holds Low/Reverse Sprag To Case (.098" Thick)(7 3/8"OD) 2010-Up...1 .....
211884C .....Snap Ring, A6GF1 Holds Low/Reverse Sprag To Case (.057" Thick)(7 3/8"OD) 2012-Up .....1 .....
211885A.....Snap Ring, A6MF2/6F24 Holds Low/Reverse Clutch Pressure Plate In (.099" Thick)(7 1/2"OD)
.....2010-Up .....1 .....
211885C .....Snap Ring, A6GF1 Holds Low/Reverse Clutch Pressure Plate In (.099" Thick)(7 5/16"OD)
.....2012-Up .....1 .....45639-3B600
211893AA.....Snap Ring, A6MF2/6F24 Holds Low/Reverse Clutch Spring Retainer In (.067" Thick)(7 3/8"OD)
..... 2010-Up .....1 .....
211893AB.....Snap Ring, A6MF2/6F24 Holds Low/Reverse Clutch Spring Retainer In (.075" Thick)(7 3/8"OD)
.....2010-Up .....1 .....
211893AC.....Snap Ring, A6MF2/6F24 Holds Low/Reverse Clutch Spring Retainer In (.083" Thick)(7 3/8"OD)
.....2010-Up .....1 .....
211893AD.....Snap Ring, A6MF2/6F24 Holds Low/Reverse Clutch Spring Retainer In (.091" Thick)(7 3/8"OD)
.....2010-Up .....1 .....
211893AE.....Snap Ring, A6MF2/6F24 Holds Low/Reverse Clutch Spring Retainer In (.098" Thick)(7 3/8"OD)
.....2010-Up .....1 .....
211893AF .....Snap Ring, A6MF2/6F24 Holds Low/Reverse Clutch Spring Retainer In (.106" Thick)(7 3/8"OD)
.....2010-Up .....1 .....
211893AG.....Snap Ring, A6MF2/6F24 Holds Low/Reverse Clutch Spring Retainer In (.114" Thick)(7 3/8"OD)
.....2010-Up .....1 .....
211893CA.....Snap Ring, A6GF1 Holds Low/Reverse Clutch Spring Retainer In (.067" Thick)(7 1/8"OD)
.....2012-Up .....1 .....45619-3B617
211893CB.....Snap Ring, A6GF1 Holds Low/Reverse Clutch Spring Retainer In (.075" Thick)(7 1/8"OD)
.....2012-Up .....1 .....45619-3B619

© Whatever It Takes Transmission Parts. Inc.

PART #	HARDPARTS (Continued)	QTY	REFERENCE #
211893CC	Snap Ring, A6GF1 Holds Low/Reverse Clutch Spring Retainer In (.083" Thick)(7 1/8"OD) 2012-Up	1	45619-3B621
211893CD	Snap Ring, A6GF1 Holds Low/Reverse Clutch Spring Retainer In (.090" Thick)(7 1/8"OD) 2012-Up	1	45619-3B623
211893CE	Snap Ring, A6GF1 Holds Low/Reverse Clutch Spring Retainer In (.098" Thick)(7 1/8"OD) 2012-Up	1	45619-3B625
211893CF	Snap Ring, A6GF1 Holds Low/Reverse Clutch Spring Retainer In (.106" Thick)(7 1/8"OD) 2012-Up	1	45619-3B627
211893CG	Snap Ring, A6GF1 Holds Low/Reverse Clutch Spring Retainer In (.114" Thick)(7 1/8"OD) 2012-Up	1	45619-3B629
211955A	Piston Housing, A6MF2/6F24 Underdrive Clutch (Aluminum)(2 Bolt)(.972" Thick)(5.705"OD) 2010-Up	1	
211955C	Piston Housing, A6GF1 Underdrive Clutch (Aluminum)(2 Bolt)(.985" Thick)(5.477"OD) 2012-Up	1	45614-3B601
211960A	Piston, A6MF2/6F24 Overdrive Clutch (Aluminum)(22 Spring Pockets)(.790" Thick)(5.905"OD) 2010-Up	1	
211960AK	Piston Kit, A6MF1/A6MF2 (Hyundai/Kia) 2009-Up	1	
211960BK	Piston Kit, A6LF1/A6LF2/A6LF3 (Hyundai/Kia) 2009-Up	1	
211960C	Piston, A6GF1 Overdrive Clutch (Aluminum)(No Spring Pockets)(.790" Thick)(5.905"OD) 2012-Up	1	45523-3B602
211960CK	Piston Kit, A6GF1 2009-Up	1	
211961A	Piston, A6MF2/6F24 Underdrive Clutch (Steel)(.427" Thick)(6 7/16"OD) 2010-Up	1	
211961C	Piston, A6GF1 Underdrive Clutch (Steel)(.410" Thick)(6 1/8"OD) 2012-Up	1	45613-3B601
211962A	Piston, A6MF2/6F24 2-6 Clutch (.655" Thick)(6 3/4"OD)(Aluminum) 2010-Up	1	
211962C	Piston, A6GF1 2-6 Clutch (.655" Thick)(6 1/2"OD)(Aluminum) 2012-Up	1	45662-3B600
211965A	Piston/Housing, A6MF2/6F24 3-5/Reverse Clutch (Steel)(.975" Thick)(5.120"OD) 2010-Up	1	
211965C	Piston/Housing, A6GF1 3-5/Reverse Clutch (Steel)(1.005" Thick)(4.880"OD) 2012-Up	1	45423-3B600
211967A	Piston, A6MF2/6F24 Low/Reverse Clutch (Aluminum)(1.140" Thick)(7"OD) 2010-Up	1	
211967C	Piston, A6GF1 Low/Reverse Clutch (Aluminum)(1.140" Thick)(6 11/16"OD) 2012-Up	1	45638-3B600
211970A	Spring/Retainer, A6MF2/6F24 Overdrive Clutch Return (22 Springs)(.765" Thick)(3.695"OD) 2010-Up	1	
211970C	Spring/Retainer, A6GF1 Overdrive Clutch Return (24 Springs)(.765" Thick)(3.665"OD) 2012-Up	1	
211971A	Spring, A6MF2/6F24 Underdrive Clutch Return (.760" Thick)(4.860"OD) 2010-Up	1	
211971C	Spring, A6GF1 Underdrive Clutch Return (.712" Thick)(4.460"OD) 2012-Up	1	45624-3B600
211972A	Spring, A6MF2/6F24 2-6 Clutch Return (Wavy)(.036" Thick)(6 9/16"OD) 2010-Up	1	
211972C	Spring, A6GF1 2-6 Clutch Return (Wavy)(.035" Thick)(6 1/4"OD) 2012-Up	1	45652-3B600
211975A	Spring, A69MF2/6F24 2-5/Reverse Clutch Return (.045" Thick)(3.915"OD) 2010-Up	1	
211975C	Spring, A6GF1 3-5/Reverse Clutch Return (.045" Thick)(3.770"OD) 2012-Up	1	45424-3B600
211977A	Spring/Retainer, A6MF2/6F24 Low/Reverse Clutch Return (.980" Thick)(7"OD) 2010-Up	1	
211977C	Spring/Retainer, A6GF1 Low/Reverse Clutch Return (.980" Thick)(6 3/4"OD) 2012-Up	1	45631-3B600
211980A	Piston/Retainer, A6GF1/A6MF2/6F24 Overdrive (Bonded)(.205" Thick)(4.650"OD) 2010-Up	1	
211982A	Retainer, A6MF2/6F24 2-6 Clutch Spring (.062" Thick)(6 9/16"OD) 2010-Up	1	
211982C	Retainer, A6GF1 2-6 Clutch Spring (.062" Thick)(6 1/4"OD) 2012-Up	1	45655-3B600
211985A	Piston/Retainer, A6MF2/6F24 3-5/Reverse Clutch (Bonded)(.240" Thick)(3.980"OD) 2009-Up	1	
211985C	Piston/Retainer, A6GF1 3-5/Reverse Clutch (Bonded)(.230" Thick)(3.825"OD) 2012-Up	1	45442-3B600
211991-4A	Rooster Comb, A6GF1/A6MF2/6F24 (.550"OD Shaft) 2010-Up	1	45940-3B000
211992A	Manual Lever, A6MF2 (With Slotted End)(Cast # 600) 2010-Up	1	
211992C	Manual Lever, A6GF1 (With Slotted End)(Cast # 260) 2012-Up	1	45970-3B600
211992D	Manual Lever, 6F24 (With Studded End)(No Cast #) 2013-Up	1	
211994A	Park Pawl Actuator, A6GF1/A6MF2/6F24 (8" Long) 2010-Up	1	45920-3B610
211995A	Park Pawl Assembly, A6MF2 (Cast # 3B600 On Park Pawl)(5 Pieces) 2010-Up	1	
211995C	Park Pawl Assembly, A6GF1 (Cast # 26000 On Park Pawl)(5 Pieces) 2012-Up	1	
211995D	Park Pawl Assembly, 6F24 (Cast # 3B650 On Park Pawl)(5 Pieces) 2013-Up	1	
211999A	Oil Tube, A6MF2 (1 Bolt To Bell)(Cast # 80) 2010-Up	1	
211999C	Oil Tube, A6GF1 (1 Bolt To Bell)(Cast # 26) 2012-Up	1	45272-3B800
211999D	Oil Tube, 6F24 (1 Bolt To Bell)(Cast # 65) 2013-Up	1	

© Whatever It Takes Transmission Parts. Inc.

© Whatever It Takes Transmission Parts. Inc.

002
Overhaul Kits

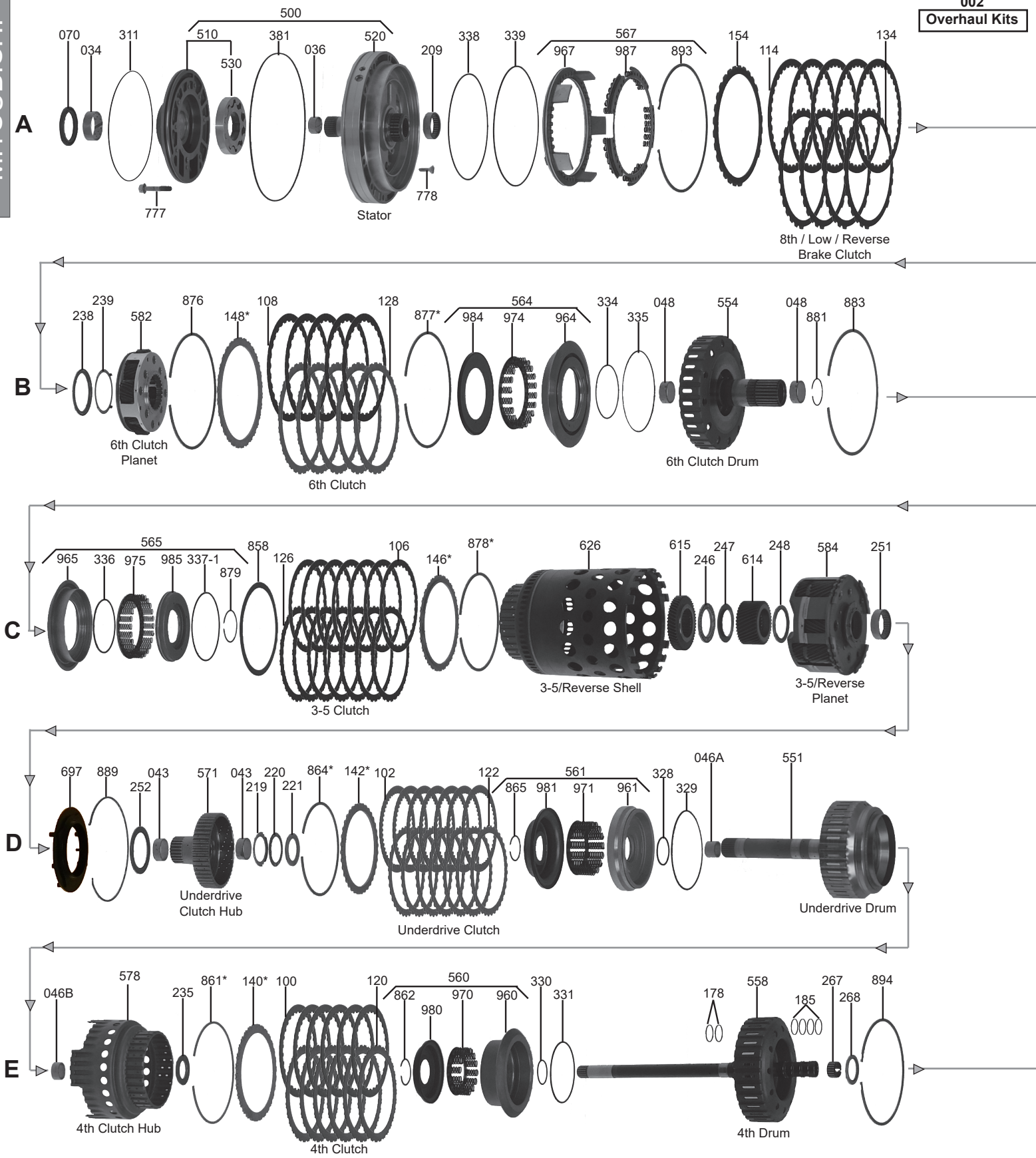

© Whatever It Takes Transmission Parts. Inc.

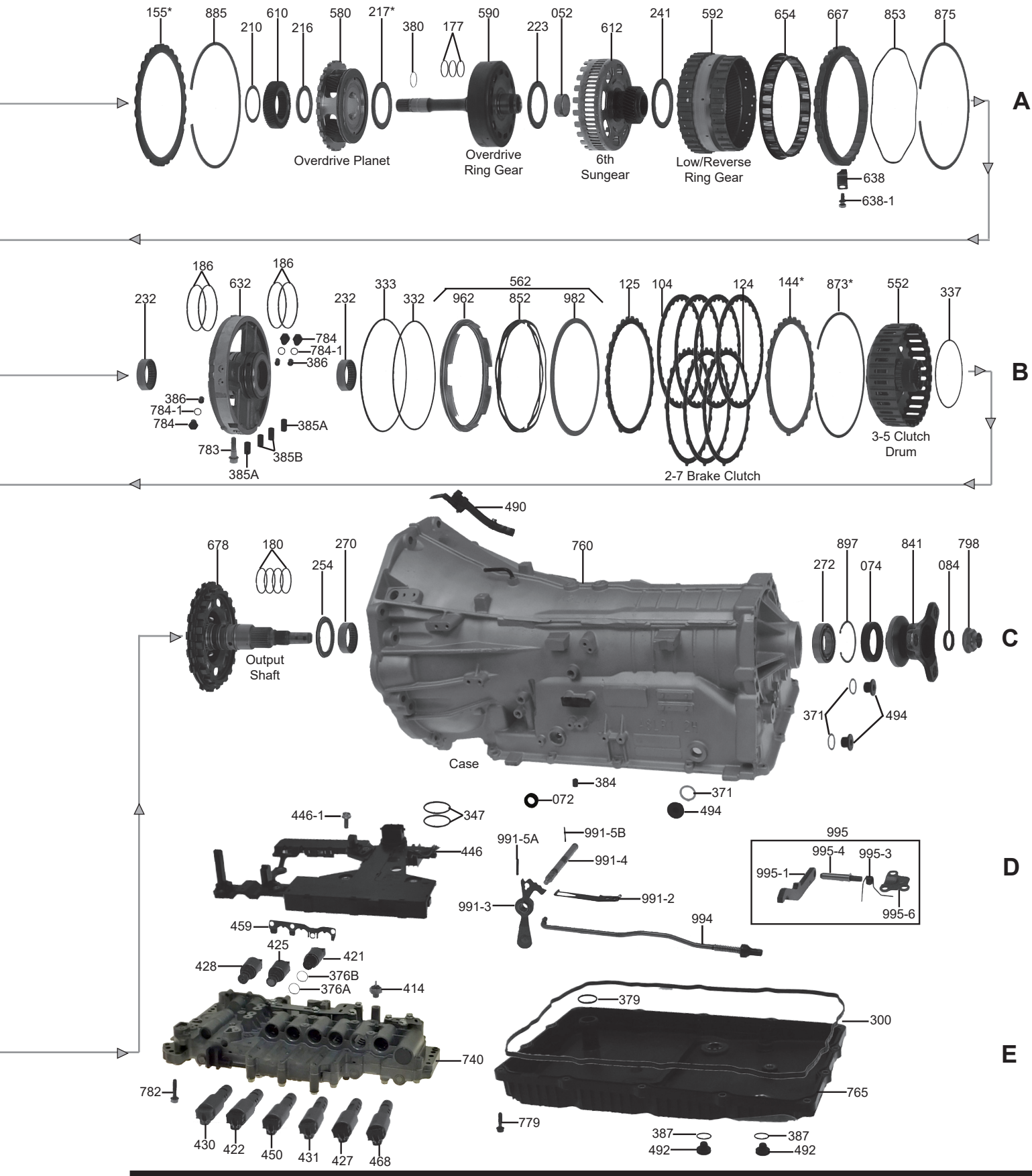

1-800-940-0197

© Whatever It Takes Transmission Parts. Inc.

PART #	OVERHAUL KITS	QTY	REFERENCE #
331002AW	Overhaul, A8LR1 (8 Speed) (Hyundai/Kia) 2011-Up	1	

PART #	BUSHINGS	QTY	REFERENCE #
331034A	Bushing, A8LR1 Pump Body (Bronze W/Oil Pockets)(1.730"ID) (.610"Thick) 2011-Up	1	
331036A	Bushing, A8LR1 Stator (Front) Bronze (.940"ID)(1.074"OD) (.430"Thick) 2011-Up	1	
331043A	Bushing, A8LR1 Underdrive Clutch Hub (Front & Rear)(1.260"ID) (1.378"OD)(.475"Wide) 2011-Up	1	
331046A	Bushing, A8LR1 Underdrive Drum (Front)(.862"ID)(.705"Wide) 2011-Up	1	
331046B	Bushing, A8LR1 Underdrive Drum (Rear)(.892"ID)(.480"Wide) 2011-Up	1	
331048A	Bushing, A8LR1 6th Clutch Drum (Front & Rear)(1.375"OD) (1.260"ID) 2011-Up	1	
331052A	Bushing, A8LR1 6th Sungear Shell (1.260"ID)(.470"Wide) Center Groove & 4 Relief Cuts 2011-Up	1	

PART #	METAL CLAD SEALS	QTY	REFERENCE #
331070A	Seal, A8LR1 Front Pump (2.370"OD)(1.695"ID) 2011-Up	1	
331072A	Seal, A8LR1 Linkage (.870"OD) (.280"Thick) 2011-Up	1	45244-4C000
331074A	Seal, A8LR1 Rear Case (2.440" OD)(.485"Thick) 2011-Up	1	45265-4E000
331084A	Seal, A8LR1 Yoke (Rear) (1.285"OD)(.194"Thick) 2011-Up	1	

PART #	FRICTION CLUTCH	QTY	REFERENCE #
331100A	Friction, A8LR1 4th Clutch (30 Teeth) (5.645"OD)(.076"Thick) 2011-Up	6	
331102A	Friction, A8LR1 Underdrive Clutch (48 Teeth) (5.310"OD)(.060"Thick) 2011-Up	7	
331104A	Friction, A8LR1 2-7 Brake Clutch (30 Teeth) (.111"Thick)(6 7/8"OD) 2011-Up	4	
331106A	Friction, A8LR1 3-5 Clutch (30 Teeth) (.071"Thick)(5.690"OD) 2011-Up	7	
331108A	Friction, A8LR1 6th Clutch (30 Teeth) (.070"Thick)(6 5/8"OD) 2011-Up	5	
331114A	Friction, A8LR1 8th/Low/Reverse Brake Clutch (36 Teeth)(One Sided)(.072"Thick) (7 1/16"OD) 2011-Up	5	

PART #	STEEL CLUTCH	QTY	REFERENCE #
331120A	Steel, A8LR1 4th Clutch (30 Teeth) (4.786"ID)(.076"Thick) 2011-Up	6	
331122A	Steel, A8LR1 Underdrive Clutch (36 Teeth) (4.565"ID)(.060Thick) 2011-Up	7	
331124A	Steel, A8LR1 2-7 Brake Clutch (23 Teeth)(.110"Thick) 2011-Up	3	
331125A	Steel, A8LR1 2-7 Brake Clutch (Top)(One Sided)(23 Teeth) (6 1/4"ID)(.143"Thick) 2011-Up	1	
331126A	Steel, A8LR1 3-5 Clutch (30 Teeth) (.071"Thick)(4.945"ID) 2011-Up	7	
331128A	Steel, A8LR1 6th Clutch (30 Teeth) (5.760"ID)(.070"Thick) 2011-Up	5	
331134A	Steel, A8LR1 8th/Low/Reverse Brake Clutch (27 Teeth)(.072"Thick)(6 1/4"ID) 2011-Up	4	

PART #	PRESSURE PLATES	QTY	REFERENCE #
331140A	Pressure Plate, A8LR1 4th Clutch (30 Teeth) (Selective) 2011-Up	1	
331142A	Pressure Plate, A8LR1 Underdrive Clutch (36 Teeth)(Selective) 2011-Up	1	
331144A	Pressure Plate, A8LR1 2-7 Brake Clutch (23 Teeth)(Selective) 2011-Up	1	
331146A	Pressure Plate, A8LR1 3-5 Clutch (Top)(30 Teeth)(4.950"ID) (Selective) 2011-Up	1	
331148A	Pressure Plate, A8LR1 6th Clutch (30 Teeth)(5.763"ID)(Selective) 2011-Up	1	
331154A	Backing Plate, A8LR1 8th/Low/ Reverse Brake Clutch (Bottom)(27 Teeth) (One Sided Friction) (.127"Thick)(3 Wide Teeth) 2011-Up	1	
331155A	Pressure Plate, A8LR1 8th/Low/Reverse Brake Clutch (Top)(23 Teeth) (Selective)(6 1/4"ID) 2011-Up	1	

PART #	OIL SEALING RINGS	QTY	REFERENCE #
331177AT	Ring, A8LR1 Input Shaft (Teflon)(1.005"OD)(.076"Thick) 2011-Up	3	45705-4E000
331178A	Ring, A8LR1 4th Drum Shaft (Front)(1.030"OD)(.076"Thick) 2011-Up	2	45803-4E000
331180A	Ring, A8LR1 Output Shaft To Case (1.570"OD)(.077"Thick) 2011-Up	4	45813-4E000
331185A	Ring, A8LR1 4th Drum (Rear) (.975"OD)(.077"Thick) 2011-Up	4	45804-4E000
331186A	Ring, A8LR1 Center Support (Front & Rear)(2.835"OD) (.082"Thick) 2011-Up	4	

PART #	WASHERS & BEARINGS	QTY	REFERENCE #
331209A	Needle Bearing, A8LR1 Stator (Rear)(1.375"OD)(INA F-565553) 2011-Up	1	46170-4E000
331210A	Shim, A8LR1 Stator To O.Dr. Sun Gear (2.262"OD)(.040"Thk) 2011-Up	1	
331216A	Bearing W/Races, A8LR1 Overdrive Sun Gear To Planet (2.275"OD) (1.635"ID)(.140"Thick) 2011-Up	1	45833-4E011

© Whatever It Takes Transmission Parts. Inc.

331217A	Bearing W/Races, A8LR1 Overdrive Planet To Ring Gear (2.930”OD) (Selective) 2011-Up (Also Fits Overdrive Ring Gear To 6th Sungear Shell)	1-2	
331219A	Race, A8LR1 Underdrive Clutch Hub to Underdrive Drum (Front)(2.119”OD) 2011-Up	1	
331220A	Needle Bearing, A8LR1 Underdrive Clutch Hub To Underdrive Drum(2.053”OD) (1.514”ID) (.078”Thick) 2011-Up	1	
331221A	Race, A8LR1 Underdrive Clutch Hub to Underdrive Drum (Rear)(2.018”OD) (1.335”ID) (.119”Thick) 2011-Up	1	
331223A	Bearing W/Races, A8LR1 Overdrive Ring Gear To 6th Sungear Shell (2.930”OD)(.140”Thick) 2011-Up (Use 331217A)	1	
331232A	Needle Bearing, A8LR1 Center Support (Front & Rear)(1.843”OD) (Cast #INA F-568324.02) 2011-Up	1	
331235A	Bearing W/Races, A8LR1 4th Clu Hub To 4th Drum (1.860”OD) (.173”Thick) 2011-Up	1	
331238A	Bearing W/Race, A8LR1 6th Clutch Planet to Low/Reverse Ring Gear (2.825”OD) 2011-Up	1	45831-4E000
331239A	Race, A8LR1 6th Clutch Planet To Low/Reverse Ring Gear (4 Tabs)(2.745”OD)(0.031”Thick) 2011-Up	1	
331241A	Bearing W/Races, A8LR1 6th Sungear Shell to Low/Reverse Ring Gear (3.025”OD)(.140”Thick) 2011-Up	1	45831-4E000
331246A	Bearing W/Race, A8LR1 3-5 Reverse Sungear (Large Outer) to 3-5 Reverse Sungear (Small Inner)(2.40”OD) 2011-Up	1	45834-4E000
331247A	Race, A8LR1 3-5 Reverse Sungear (Large Outer) to 3-5 Reverse Sungear(Small Inner) (2.388”OD) 2011-Up	1	45834-4E001
331248A	Bearing W/Races, A8LR1 3-5 Reverse Sungear(Inner) To The Planet (2.313”OD)(.141Thick) 2011-Up	1	45837-4E000
331251A	Needle Bearing, A8LR1 3-5 Reverse Planet (1.850”OD)(.547” Wide) (INA F-568324.02) 2011-Up	1	
331252A	Bearing W/Races, A8LR1 3-5 Reverse Planet to Underdrive Clutch Hub (2.916”OD)(.141”Thick) 2011-Up	1	
331254A	Bearing W/Races, A8LR1 OP SFT to Case (2.515”OD)(.162”Thick) 2011-Up	1	45840-4E000
331267A	Caged Needle Bearing, A8LR1 4th Drum (Rear) (Split Plastic Cage)(.960”OD) 2011-Up	1	
331268A	Bearing W/Races, A8LR1 4th Drum To Output Shaft (1.795”OD) (.142”Thick) 2011-Up	1	
331270A	Needle Bearing, A8LR1 Output Shaft To Case (1.692”ID) 2011-Up	1	45814-4E000
331272A	Ball Bearing, A8LR1 In Case (Rear)(11 Balls)(2.440”OD) (.550”Thick)(KBC 6007AF1 KOREA) 2011-Up	1	

PART #	GASKETS & RUBBER COMPONENTS	QTY	REFERENCE #
331300AW	Gasket, A8LR1 Pan (Bonded Rubber) 2011-Up	1	
331311A	O-Ring, A8LR1 Pump Body To Stator (6 15/16”OD)(.125”Thick) 2011-Up	1	
331328A	D-Ring, A8LR1 Underdrive Clutch Piston (Inner)(1.50”ID)(.081”Thick) 2011-Up	1	
331329A	D-Ring, A8LR1 Underdrive Clutch Piston (Outer)(4.883”OD) (.081”Thick) 2011-Up	1	
331330A	D-Ring, A8LR1 4th Clutch Piston (Inner)(1.510”OD)(.067”Thick) 2011-Up	1	
331331A	D-Ring, A8LR1 4th Clutch Piston (Outer)(3.755”OD)(.082”Thick) 2011-Up	1	
331332A	D-Ring, A8LR1 2-7 Brake Clutch Piston (Inner)(6.090”ID) 2011-Up	1	
331333A	D-Ring, A8LR1 2-7 Brake Clutch Piston (Outer)(6 7/8”OD) (.081”Thick) 2011-Up	1	
331334A	D-Ring, A8LR1 6th Clutch Piston (Inner)(3.105”ID)(.066”Thick) 2011-Up	1	
331335A	D-Ring, A8LR1 6th Clutch Piston (Outer)(4.935”OD)(.065”Thick) 2011-Up	1	
331336A	D-Ring, A8LR1 3-5 Clutch Piston (Inner) 2011-Up	1	
331337-1A	D-Ring, A8LR1 3-5 Clutch Piston Retainer (Outer) 2011-Up	1	
331337A	D-Ring, A8LR1 3-5 Clutch Drum (Inner) 2011-Up	1	45468-4E000
331338A	D-Ring, A8LR1 8th/Low/Reverse Clu Piston (Inner) 2011-Up	1	
331339A	D-Ring, A8LR1 8th/Low/Reverse Clu Piston (Outer) 2011-Up	1	
331347A	O-Ring, A8LR1 Wire Harness to Case (1.695”OD)(.122”Thick) 2011-Up	2	
331371A	Gasket/Washer, A8LR1 (Aluminum) Fill Plug To Case (.987”OD) 2011-Up	1	46711-36000
331376A	O-Ring, A8LR1 Shift Solenoid A (.653”OD) 2011-Up	1	
331376B	O-Ring, A8LR1 Shift Solenoid A (.687”OD) 2011-Up	1	
331379A	O-Ring, A8LR1 Filter Neck (1.240”OD)(.130”Thick) 2011-Up	1	
331380A	O-Ring, A8LR1 Input Shaft (.945”OD)(.065”Thick) 2011-Up	1	45701-4C000
331381A	O-Ring, A8LR1 Stator (9”OD) (.124”Thick) 2011-Up	1	
331384A	Tube, A8LR1 Transfer Valve Body to Case (Rubber) 2011-Up	1	
331385A	Tube, A8LR1 Valve Body to Center Support (Rubber)(.740”Tall) 2011-Up	2	
331385B	Tube, A8LR1 Valve Body to Center Support (Rubber)(.600”Tall) 2011-Up	2	
331386A	Tube, A8LR1 Center Support Transfer (Rubber) 2011-Up	3	
331387A	O-Ring, A8LR1 Drain Plug (.920”OD)(.103”Thk) 2011-Up	2	

PART #	ELECTRICAL COMPONENTS	QTY	REFERENCE #
331410A	Switch, A8LR1 PRNDL (2 Bolts To Case) 2011-Up	1	42700-4E000
331414A	Switch, A8LR1 3-5 Reverse Clutch Pressure (QR1A Cast) 2011-Up	1	
331419A	Sensor, A8LR1 Engine RPM Signal (On Bell Housing) 2011-Up	1	
331421A	Solenoid, A8LR1 Shift Solenoid A (46313-3B030)(Black End) 2011-Up	1	46313-3B030
331422A	Solenoid, A8LR1 6th Clutch (KK11 L161067 Cast) (Brown End) 2011-Up	1	46313-4E501

© Whatever It Takes Transmission Parts. Inc.

PART #	ELECTRICAL COMPONENTS (Continued)	QTY	REFERENCE #
331425A	Solenoid, A8LR1 Damper Clutch (46313-3B010 Cast) (Brown End) 2011-Up	1	46313-3B010
331427A	Solenoid, A8LR1 4th & Overdrive Clutch (KKG L1160113 Cast) (Black End) 2011-Up	1	46313-4E601
331428A	Solenoid, A8LR1 Line Pressure (46313-3B000 Cast) (Dark Green End) 2011-Up	1	46313-3B001
331430A	Solenoid, A8LR1 8th/Low/Reverse (KKL L210003 Cast)(Beige End) 2011-Up	1	46313-3B001
331431A	Solenoid, A8LR1 3-5 Reverse Clutch (KKD L1210379 Cast)(Red End) 2011-Up	1	46313-4E701
331446A	Wire Harness, A8LR1 Internal (24 Blade Connector)W/TOT & 2 Speed Sensors (8 Bolts To Valve Body) 2011-Up	1	46305-4F100
331446-1AK	Bolt Set, A8LR1 Wire Harness to Valve Body (8 pieces) 2011-Up	1	
331450A	Solenoid, A8LR1 2-7 Brake (KK11 L161065)(Brown End) 2011-Up	1	46313-4E501
331468A	Solenoid, A8LR1 Underdrive Clutch (KK11 L161059 Cast)(Brown End) 2011-Up	1	46313-4E501

PART #	MISCELLANEOUS	QTY	REFERENCE #
331490A	Vent Tube, A8LR1 (Rubber) (4 1/4"Tube) 2011-Up	1	45273-4E000
331492A	Drain Plug, A8LR1 (8mm Allen) (.870"OD)(.650"Tall) (Also Fits Fluid Check Plug) 2011-Up	1	
331494A	Fill Plug, A8LR1 (8mm Allen X .590"Long)(1.0855"OD) 2011-Up	3	

PART #	HARDPARTS	QTY	REFERENCE #
331500A	Pump, A8LR1 Complete 2011-Up (Stator & Pump Body W/ Gears)	1	
331510A	Pump Body W/Gears, A8LR1 (Cast Iron)(9 Bolt)(6 7/8"OD) (No Cresent)(.526"Thick Lobe Type Gears) 2011-Up	1	
331520A	Stator, A8LR1 (Aluminum)(12 Bolts To Case & Body)(9"OD) (31 Spline Stator Tube) (27 Rear Splines For Sungear) 2011-Up	1	
331530A	Pump Gear Set, A8LR1 (9 Teeth Inner & 10 Teeth Outer Lobe Type) (.526"Thick)(2 Ears For Converter) 2011-Up	1	
331551A	Drum, A8LR1 Underdrive (Stamped Steel)(7 Clutch)(10 3/4"Long) (30 Spline) 2011-Up	1	
331552A	Drum, A8LR1 3-5 Clutch Drum (Stamped Steel)(6 1/8"OD) (30 Teeth Steels) 2011-Up	1	
331554A	Drum, A8LR1 6th Clutch (5 Clutch) (Steel)(5.085" Tall) 2011-Up	1	
331558A	Drum, A8LR1 4th (Stamped Steel)(15 7/8"Long)(6 Clutch) 2011-Up	1	
331560A	Piston Kit, A8LR1 4th Clutch 2011-Up	1	
331561A	Piston Kit, A8LR1 Underdrive Clutch 2011-Up	1	
331562A	Piston Kit, A8LR1 2-7 Brake Clutch 2011-Up	1	
331564A	Piston Kit, A8LR1 6th Clutch 2011-Up	1	
331565A	Piston Kit, A8LR1 3-5 Clutch 2011-Up	1	
331567A	Piston Kit, A8LR1 8th/Low/Reverse Clutch 2011-Up	1	
331571A	Clutch Hub, A8LR1 Underdrive (26 Spline)(3.063"Long)(48 Clutch Teeth) 2011-Up	1	45590-4E020
331578A	Hub, A8LR1 4th Clutch (Stamped Steel)(4.410"Tall) (30 Clutch Teeth) 2011-Up	1	45577-4E001
331580A	Planet, A8LR1 Overdrive (Aluminum) (4 Gear)(24 Lugs) 2011-Up	1	45720-4E010
331582A	Planet, A8LR1 6th Clutch (Aluminum) 8 Gears W/Tin Oil Shield 2011-Up	1	45750-4E001
331584A	Planet, A8LR1 3-5/Reverse (8 Gear)(Steel)(6.007"OD) (3.188"Tall) 2011-Up	1	45780-4E002
331590A	Ring Gear, A8LR1 W/Input Shaft (8 1/4" Long)(82 Teeth Left Angle) (20 Splines For Converter) (3 Rings) 2011-Up	1	45701-4E001
331592A	Ring Gear, A8LR1 Low/Reverse (30/36 Clutch Teeth)(82 Teeth) (2.775"Thick) 2011-Up	1	45765-4E001
331610A	Sun Gear, A8LR1 Overdrive (50 Teeth W/1 Groove)(27 Inner Splines) (2.840"OD)(.775"Thick) 2011-Up	1	45710-4E010
331612A	Sungear W/Shell, A8LR1 6th Clutch (34 Teeth Sungear)(24 Lugs) 2011-Up	1	45740-4E001
331614A	Sungear, A8LR1 3-5 Reverse Planet (Inner)(Small)(38 Teeth)2011-Up	1	45771-4E001
331615A	Sungear, A8LR1 3-5 Reverse Planet (Outer)(Large)(50 Teeth) 2011-Up	1	45770-4E001
331626A	Shell, A8LR1 3-5 Reverse Shell W/90 Teeth Ring Gear (16 Lugs) (30 Clutch Teeth)(9 1/8"Tall) 2011-Up	1	45795-4E002
331632A	Support, A8LR1 Center (Aluminum) (7 1/8"OD) 2011-Up	1	45320-4E000
331638A	Anti-Rattle Clip, A8LR1 Outer Race 2011-Up	1	45685-4F000
331654A	Roller Clu, A8LR1 Low/Reverse Ring Gear (20 Rollers)(6 1/2"OD) 2011-Up	1	
331667A	Outer Race, A8LR1 Low/Reverse Ring Gear Roller Clutch (21 Lugs)	1	45683-4E020
331678A	Output Shaft, A8LR1 (7 1/4"Long) (21 Park Lugs)(18 Outer lugs) 2011-Up	1	45810-4E010
331697A	Oil Deflector, A8LR1 3-5 Reverse Planet (Plastic)(4 Tabs) (5.225"OD) 2011-Up	1	
331740A	Valve Body, A8LR1 (9 Solenoids)(KD1 Cast) 2011-Up	1	46200-4E260
331760A	Case, A8LR1 (14 Pan Bolts) (3 O'Clock Closed Starter) (Casting A8LR1)(Sensor Hole At 2 O'Clock) 2011-Up	1	45240-4E000
331765A	Pan W/Filter, A8LR1 (14 Bolts) 2011-Up	1	45280-4E001
331777AK	Bolt Set, A8LR1 Pump To Case (12mm Hex x 2.070"Long) (12 Pieces) 2011-Up	1	
331778AK	Bolt Set, A8LR1 Pump Body To Stator (T27 Torx x .915"Long) (9 Pieces) 2011-Up	1	
331779AK	Bolt Set, A8LR1 Pan (10mm HEX X 1.210"Long)(14 pieces) 2011-Up	1	
331782AK	Bolt Set, A8LR1 Valve Body To Case (10 pieces) 2011-Up	1	
331783AK	Bolt Set, A8LR1 Center Support to Case (12mm Hex X 1.582" Long) 2011-Up (2 Pieces)	1	
331784AK	Plug Kit, A8LR1 Transfer Tubes To Center Support (12mm Hex) (.723"Long) (3 Pieces) 2011-Up	1	

© Whatever It Takes Transmission Parts. Inc.

331798A	Nut, A8LR1 Yoke To Output Shaft 2011-Up	1	45860-4C600
331841A	Yoke, A8LR1 3 Bolt Type W/ Dust Sheild (2.385”Tall) 2011-Up	1	45820-4E010
331852A	Spring, A8LR1 2-7 Brake Clutch Return (Spiral Type) 2011-Up	1	45665-4E000
331853A	Cushion, A8LR1 Low/Reverse Outer Race to 6th Clutch Snap Ring (Waved)(7 1/16”OD) (.053”Thick) 2011-Up	1	45682-4E000
331858A	Cushion, A8LR1 3-5 Clutch Drum (5.722”OD)(.050”Thick) 2011-Up	1	
331861A	Snap Ring, A8LR1 Holds 4th Clutch In Drum (6 3/16”OD)(.094”Thick) 2011-Up	1	
331862A	Snap Ring, A8LR1 Holds 4th Clutch Piston Retainer (1.615”OD) (.060”Thick) 2011-Up	1	45511-4E000
331864A	Snap Ring, A8LR1 Holds Underdrive Clutch In The Underdrive Drum (5.657”OD) (.094”Thick) 2011-Up	1	
331865A	Snap Ring, A8LR1 Holds Underdrive Clutch Piston Retainer (1.573”OD)(.059”Thick) 2011-Up	1	45511-4E000
331873A	Snap Ring, A8LR1 Holds 2-7 Brake Clutch In Case (7 5/8”OD)(.078”Thick) 2011-Up	1	
331875A	Snap Ring, A8LR1 Holds Wave Cushion To Outer Race (In Case)(7 9/16”OD)(.077”Thick) 2011-Up	1	45827-4E000
331876A	Snap Ring, A8LR1 Holds 6th Clutch in Drum (.094”Thick) (7”OD) 2011-Up	1	45411-4E000
331877A	Snap Ring, A8LR1 Holds 6th Clutch Piston Kit In Drum (.099”Thick)(3.230”OD) 2011-Up	1	
331878A	Snap Ring, A8LR1 Holds 3-5 Clutch In The Drum (6.050”OD) (.102”Thick) 2011-Up	1	
331879A	Snap Ring, A8LR1 Holds 3-5 Clutch Piston Kit In The Drum (2.010”OD) 2011-Up	1	45461-4E000
331881A	Snap Ring, A8LR1 6th Clutch Drum (1.660”OD)(.065”Thick) 2011-Up	1	45446-4E000
331883A	Snap Ring, A8LR1 Holds Center Support In Case (.076”Think) (7 1/2”OD) 2011-Up	1	45614-4E000
331885A	Snap Ring, A8LR1 8th/Low/Reverse Brake Clutch (7 9/16”OD) (.099”Thick) 2011-Up	1	45612-4E000
331889A	Snap Ring, A8LR1 Holds 3-5 Reverse Planet In Shell (.098”Thick) (6 3/8”OD) 2011-Up	1	
331893A	Snap Ring, A8LR1 Holds 8th/Low/Reverse Piston Retainer (7 3/4”OD)(.094”Thick) (2 Notched Ends) 2011-Up	1	45611-4E000
331894A	Snap Ring, A8LR1 Holds Output Shaft to 3-5 Reverse Shell (6 1/2”OD)(.098”Thick) 2011-Up	1	45798-4E000
331897A	Snap Ring, A8LR1 Holds Ball Bearing To Case (2.578”OD) (.080”Thick) 2011-Up	1	45826-4E000
331960A	Piston, A8LR1 4th Clu (Aluminum) (14 Spr Pockets)(5.357”OD) 2011-Up	1	45581-4E030
331961A	Piston, A8LR1 Underive Clutch (Aluminum)(15 Spring Pockets) 2011-Up	1	
331962A	Piston, A8LR1 2-7 Brake Clutch (Aluminum)(6 7/8”OD)(6 Tabs) 2011-Up	1	
331964A	Piston, A8LR1 6th Clutch (Steel) (6 1/2”OD) 2011-Up	1	45441-4E030
331965A	Piston, A8LR1 3-5 Clutch (Aluminum) (5.565”OD) 2011-Up	1	45490-4E030
331967A	Piston, A8LR1 8th/Low/Reverse Clutch (Aluminum)(7 1/4”OD)(5 Legs & 30 Spring Locators) 2011-Up	1	
331970A	Spring, A8LR1 4th Clutch (14 Springs)(2.938”OD) 2011-Up	1	45556-4E000
331971A	Spring, A8LR1 Underdrive Clutch (3.355”OD)(15 Springs) 2011-Up	1	45516-4E000
331974A	Spring, A8LR1 6th Clutch (20 Springs)(4.420”OD) 2011-Up	1	45416-4E000
331975A	Return Spring, A8LR1 3-5 Clutch Piston (24 Springs)(3.95”OD) 2011-Up	1	45466-4E000
331980A	Retainer, A8LR1 4th Clutch Piston Spring (Bonded)(3.825”OD) 2011-Up	1	
331981A	Retainer, A8LR1 Underdrive Clutch Piston Spring (Bonded) (1.920”OD) 2011-Up	1	45545-4E001
331982A	Retainer, A8LR1 2-7 Brake Clutch Return Spring (7 1/8”OD) 2011-Up	1	45674-4E000
331984A	Retainer, A8LR1 6th Clutch Spring(Bonded)(5.045”OD) 2011-Up	1	45445-4E000
331985A	Retainer, A8LR1 3-5 Clutch Return Spring (Aluminum)(4.310”OD) 2011-Up	1	45493-4E010
331987A	Retainer W/Springs, A8LR1 (30 Springs)(7 5/16”OD) (5 Notches) 2011-Up	1	45635-4E010
331991-2A	Detent, A8LR1 Rooster Comb (4.220”Long) 2011-Up	1	
331991-3A	Rooster Comb, A8LR1 2011-Up	1	45940-4E000
331991-4A	Manual Shaft, A8LR1 (5.905” Long) 2011-Up	1	45943-4E000
331991-5A	Roll Pin, A8LR1 Holds Rooster Comb To Manual Shaft (.160”OD)(.994”Long) 2011-Up	1	
331991-5B	Roll Pin, A8LR1 Manuel Shaft To Case (.104”OD)(.955”Long) 2011-Up	1	
331994A	Park Rod, A8LR1 (12 3/4”Long) 2011-Up	1	45925-4E000
331995A	Park Pawl Assembly, A8LR1 2011-Up	1	
331995-1A	Park Pawl, A8LR1 (6 1/2”Long) 2011-Up	1	45921-4E000
331995-3A	Spring, A8LR1 Park Pawl Return (.402”Thick)(.077”OD) 2011-Up	1	
331995-4A	Pivot Pin, A8LR1 Park Pawl (2.680”OD) 2011-Up	1	45960-4E000
331995-6A	Actuator Park, A8LR1 (3 Bolts) (2.40”Long)(1.860”Wide) 2011-Up	1	45931-4E000

© Whatever It Takes Transmission Parts. Inc.

000 P&R Kit
002 OHK Kit
004 Master L/Steels Kit
006 Master W/Steels Kit
011 Filter Kit
030 Bushing Kit
119 Friction Module
175 Ring Kit
400 Tech Manual

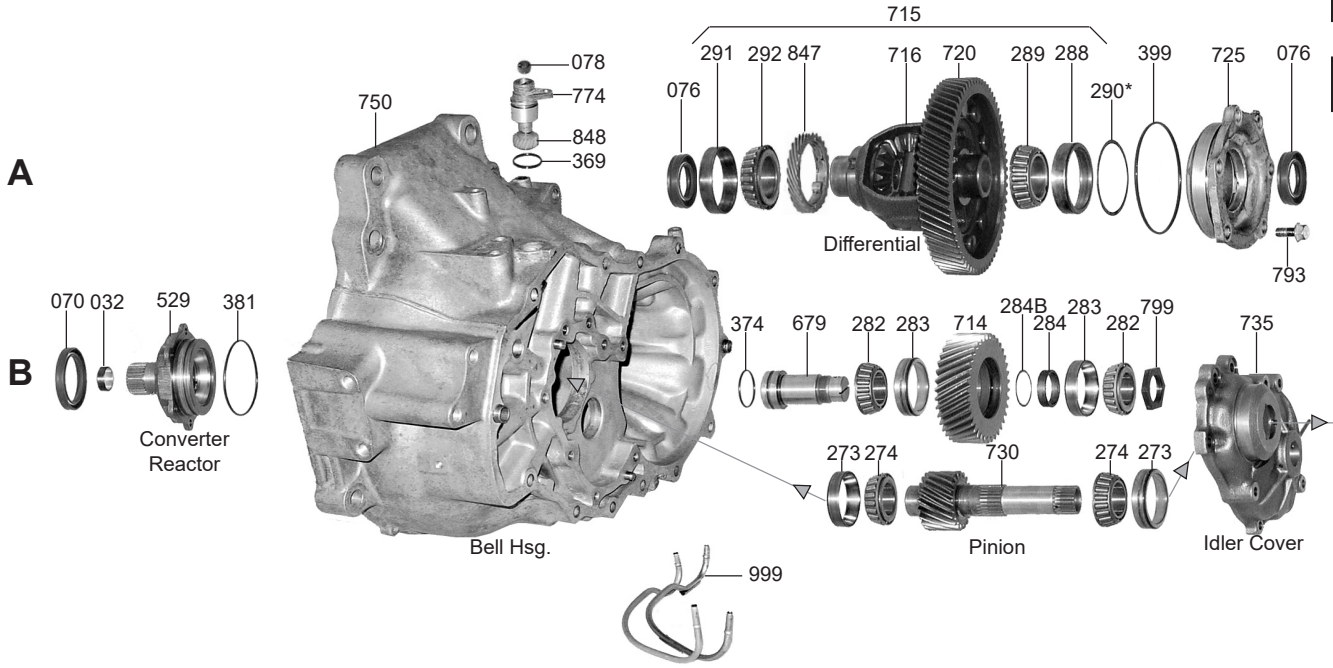

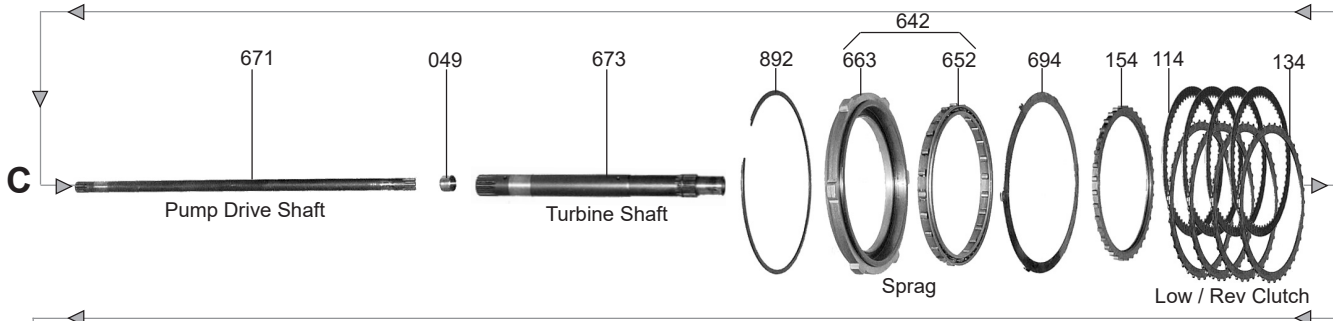

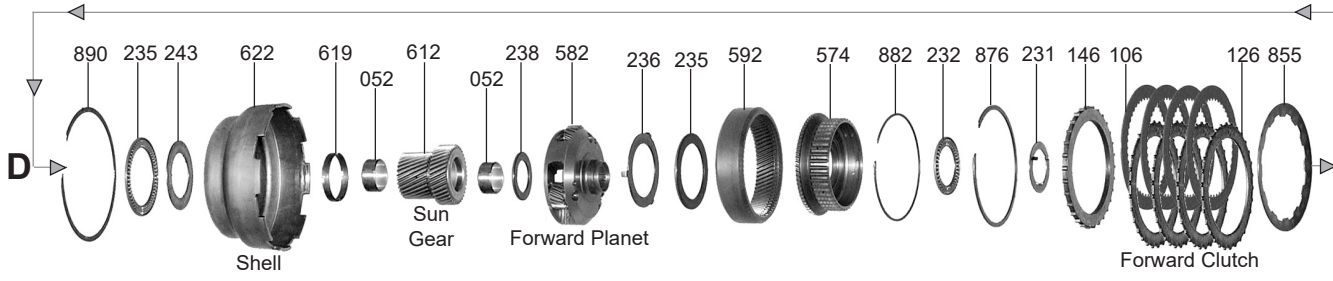

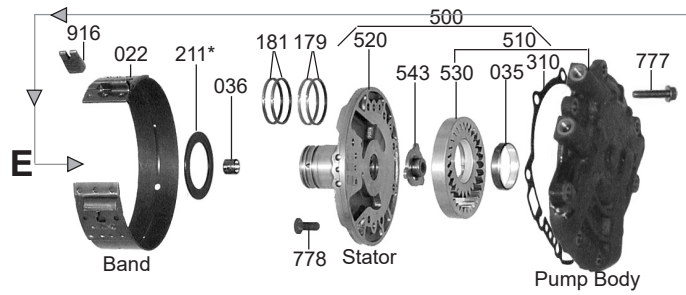

MAZDA

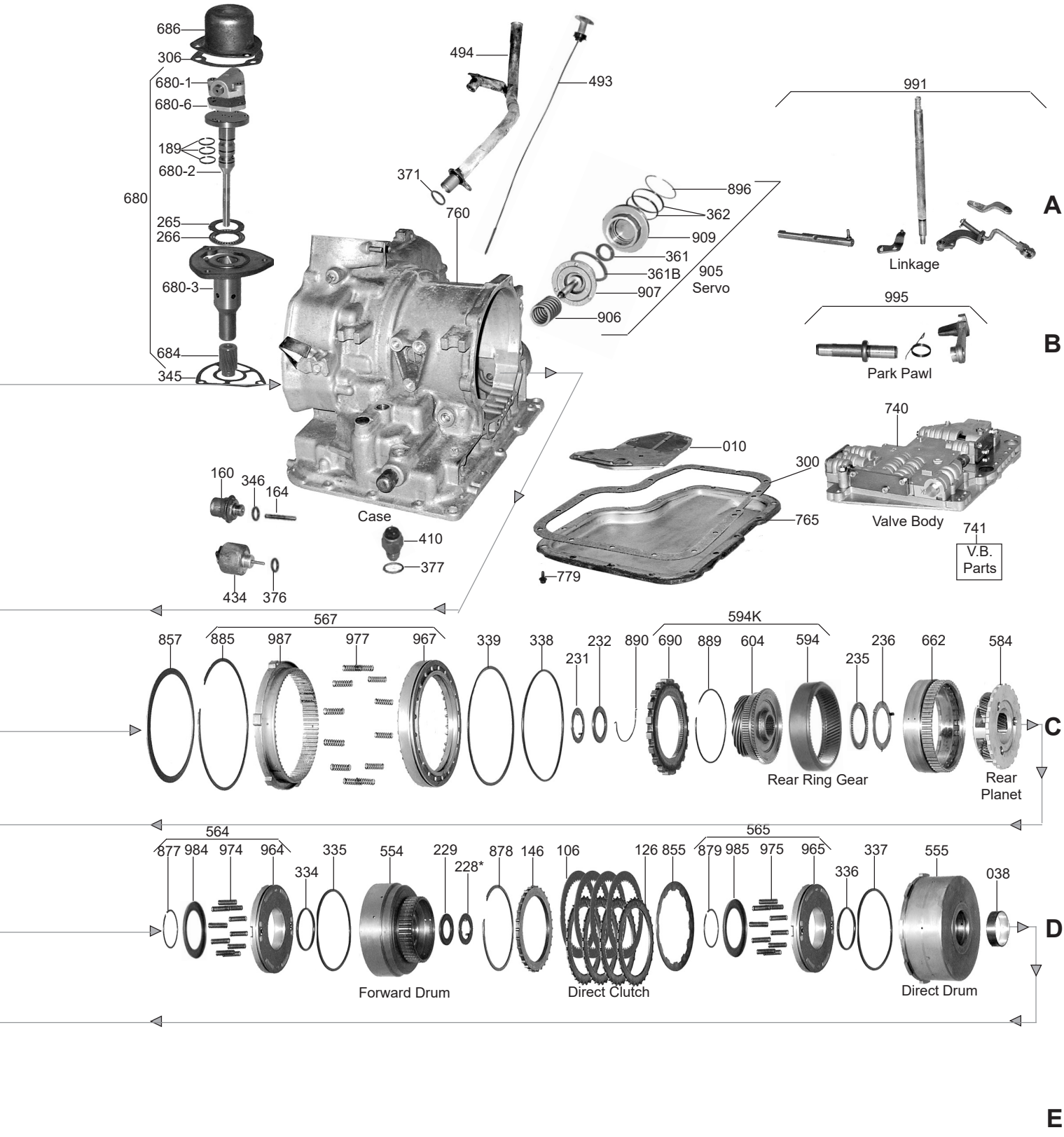

MAZDA

© Whatever It Takes Transmission Parts. Inc.

PART #	PAPER & RUBBER KIT	QTY.	REFERENCE #
18000	Paper & Rubber Kit, F3A 1981-Up	1	

PART #	OVERHAUL KITS	QTY.	REFERENCE #
18002	Overhaul Kit, F3A 1981-Up	1	

PART #	MASTER L/STEEL KIT	QTY.	REFERENCE #
18004	Master L/Steels Kit, F3A 1981-Up	1	

PART #	MASTER W/STEEL KIT	QTY.	REFERENCE #
18006	Master W/Steels Kit, F3A 1981-Up	1	

PART #	FILTER	QTY.	REFERENCE #
18010	Filter, F3A (GLC) 1981-87	1	FT01-19-815
18010A	Filter, F3A Isuzu (Deep Pan W/Out Tube) 1985-86	1	8-94413320-0
18010B	Filter, F3A (323 1981-89) (Tracer & Festiva 1987-89)	1	FT21-19-8150
18010C	Filter, F3A Isuzu (Deep Pan With Tube) 1987-91 (Storm 1990-94)	1	8-94428489-0
18010D	Filter, F3A (Tracer & Festiva) 1989-93	1	E9BZ-7A098-A
18010E	Filter, F3A (Aspire) 1995-Up	1	F4BZ-7A098-A

PART #	FILTER KIT	QTY.	REFERENCE #
18011	Filter Kit, F3A (GLC) 1981-87	1	
18011A	Filter Kit, F3A Isuzu (Deep Pan W/Out Tube) 1985-86	1	
18011B	Filter Kit, F3A (323 1981-89) Tracer & Festiva 1987-89	1	
18011C	Filter Kit, F3A Isuzu (Deep Pan With Tube) 1987-91 (Storm 1990-94)	1	
18011D	Filter Kit, F3A (Tracer & Festiva) 1989-93	1	
18011E	Filter Kit, F3A (Aspire) 1995-Up	1	

PART #	BANDS	QTY.	REFERENCE #
53022	Band, F3A (Flex)	1	0338-19-360B
53022H	Band, F3A (Hard)	1	

PART #	BUSHINGS	QTY.	REFERENCE #
18030	Bushing Kit, F3A 1981-Up	1	
18031	Bushing, F3A Converter Hub (1.418"OD)	1	
18031A	Bushing, F3A Converter Hub (1.457"OD)	1	
18032	Bushing, F3A Converter Reactor (Front)	1	31337-X5000
18032A	Bushing, F3A Converter Reactor (Rear)	1	
18035	Bushing, F3A Inner Pump Gear	1	
18036	Bushing, F3A Stator To Turbine Shaft	1-2	31353-X5000
18037	Bushing, F3A Stator To Pump Shaft	1	
18038	Bushing, F3A Direct Drum	1	
18046	Bushing, F3A Direct Drum	1	31513-X5000
18052	Bushing, F3A Sun Gear	2	31462-X5000

PART #	METAL CLAD SEALS	QTY.	REFERENCE #
18070	Seal, F3A Front 1981-Up	1	FT01-19-223
42076A	Seal, F3A Both Axles (.395" Thick)	2	FOO3-27-238A
18078	Seal, F3A Speed-O Housing	1	

PART #	FRICTION CLUTCH	QTY.	REFERENCE #
53100	Friction, F3A Forward & Direct Clutch (.063")	7-8	0338-19-500A
18106	Friction, F3A Forward & Direct Clutch (.063") (Use 53100)	7-8	0338-19-500A
18114	Friction, F3A Low/Reverse Clutch (.060")	4	FT01-19-610
18119	Friction Module, F3A	1	

PART #	STEEL CLUTCH	QTY.	REFERENCE #
18126	Steel, F3A Forward & Direct Clutch (.063")	7	FT01-19-499
18134	Steel, F3A Low/Reverse Clutch (.059")	5	FT01-19-609

© Whatever It Takes Transmission Parts. Inc.

PART #	CLUTCH PRESSURE PLATES	QTY.	REFERENCE #
53140A	Pressure Plate, F3A Forward & Direct Clutch (.190”)	1	
53140B	Pressure Plate, F3A Forward & Direct Clutch (.197”)	1	31567-FO600
53140C	Pressure Plate, F3A Forward & Direct Clutch (.205”)	1	
53140D	Pressure Plate, F3A Forward & Direct Clutch (.213”)	1	31537-FO620
53140E	Pressure Plate, F3A Forward & Direct Clutch (.220”)	1	31567-X2903
53140F	Pressure Plate, F3A Forward & Direct Clutch (.228”)	1	
53140G	Pressure Plate, F3A Forward & Direct Clutch (.236”)	1	31567-X2905
53140H	Pressure Plate, F3A Forward & Direct Clutch (.244”)	1	31667-XO503
53140J	Pressure Plate, F3A Forward & Direct Clutch (.265”)	1	
53140L	Pressure Plate, F3A Forward & Direct Clutch (.295”)	1	
18146	Pressure Plate, F3A Forward & Direct Clutch (Use 53140)	1	
18154	Pressure Plate, F3A Low/Reverse Clutch (.307”)	1	FT01-19-618B
18154A	Pressure Plate, F3A Low/Reverse Clutch (.315”)	1	FT01-19-617B
18154B	Pressure Plate, F3A Low/Reverse Clutch (.323”)	1	FT01-19-613B
18154C	Pressure Plate, F3A Low/Reverse Clutch (.330”)	1	FT01-19-614B
18154D	Pressure Plate, F3A Low/Reverse Clutch (.338”)	1	FT01-19-615B
18154E	Pressure Plate, F3A Low/Reverse Clutch (.346”)	1	FT01-19-616B

PART #	MODULATORS	QTY.	REFERENCE #
13160	Modulator, F3A (Non Adjustable)	1	
13160A	Modulator, F3A (Adjustable)	1	31938-X3100
18164	Modulator Pin, F3A (1.160” Long)	1	
18164A	Modulator Pin, F3A (1.180” Long)	1	
18164B	Modulator Pin, F3A (1.200” Long)	1	
18164C	Modulator Pin, F3A (1.220” Long)	1	
18164D	Modulator Pin, F3A (1.240” Long)	1	

PART #	OIL SEALING RINGS	QTY.	REFERENCE #
18175	Ring Kit, F3A 1981-Up	1	
53179	Ring, F3A Stator (Direct clutch) Metal	2	0338-19-256
53181	Ring, F3A Stator (Forward Clutch) Metal	2	0338-19-257
18185T	Ring, F3A Front Planet (Teflon) Some	1	
18189	Ring, F3A Governor (Metal)	3	FT01-19-6551
18189T	Ring, F3A Governor (Teflon)	3	

PART #	WASHERS & BEARINGS	QTY.	REFERENCE #
53211	Washer, F3A Stator To Direct Drum (1.50mm)	1	0338-19-646
53211A	Washer, F3A Stator To Direct Drum (1.70mm)	1	0338-19-647
53211B	Washer, F3A Stator To Direct Drum (1.90mm)	1	0338-19-641
53211C	Washer, F3A Stator To Direct Drum (2.10mm)	1	0338-19-642
53211D	Washer, F3A Stator To Direct Drum (2.30mm)	1	0338-19-643
53211E	Washer, F3A Stator To Direct Drum (2.50mm)	1	0338-19-644
53211F	Washer, F3A Stator To Direct Drum (2.70mm)	1	0338-19-645
18228AA	Race, F3A Stator To Forward Drum (3 Tab) (1.2mm)	1	FT01-19-621
18228BA	Race, F3A Stator To Forward Drum (3 Tab) (1.4mm)	1	FT01-19-632
18228CA	Race, F3A Stator To Forward Drum (3 Tab) (1.6mm)	1	FT01-19-633
18228DA	Race, F3A Stator To Forward Drum (3 Tab) (1.8mm)	1	FT01-19-634
18228EA	Race, F3A Stator To Forward Drum (3 Tab) (2.0mm)	1	FT01-19-635
18228FA	Race, F3A Stator To Forward Drum (3 Tab) (2.2mm)	1	FT01-19-636
18229	Bearing W/Race, F3A Stator To Forward Drum (1.373”OD)	1	
18229A	Bearing W/Race, F3A Stator To Forward Drum (1.647”OD)	1	
18231	Race, F3A Hub To Forward Drum (3 Tabs)	2	
18232	Bearing W/Race, F3A Forward Hub To Drum (Early)	2	
18232A	Bearing W/Race, F3A Forward Hub To Drum (Late) 1 Piece	2	
18235	Bearing W/Race, F3A Bowl To Rear Planet	3	
18236	Race, F3A Front Planet To Hub	2	
18238	Bearing W/Race, F3A Front Planet	1	
18243	Race, F3A Shell To Bearing	1	
18273	Cup Race, F3A Pinion & Idler	4	
18274	Bearing, F3A Pinion (Use 18282)	2	
18282	Bearing, F3A Idler Gear (Also Fits F3A Pinion Bearing #274)	2	94140699

© Whatever It Takes Transmission Parts. Inc.

PART #	GASKETS & RUBBER COMPONENTS	QTY.	REFERENCE #
18300	Gasket, F3A Bottom Pan	1	
18310	Gasket, F3A Pump Body To Case	1	FT01-19-221A

PART #	TECHNICAL MANUALS	QTY.	REFERENCE #
18400	Technical Manual, F3A	1	83-KF100TM

PART #	ELECTRICAL COMPONENTS	QTY.	REFERENCE #
18410	Switch, F3A Neutral Safety	1	
18414	Switch, F3A Inhibitor Switch	1	
18434	Solenoid, F3A Kickdown	1	

PART #	HARD PARTS	QTY.	REFERENCE #
18500	Pump, F3A Complete (Uses A 2 Tab Washer On Stator)	1	
18500A	Pump, F3A Complete (Uses A 3 Tab Washer On Stator)	1	
18510A	Pump Body W/Gears, F3A	1	
18520	Stator, F3A (2 Tab Washer Type)	1	
18520A	Stator, F3A (3 Tab Washer Type)	1	
18529A	Converter Reactor, F3A (2 Bushing) (2.325" Tall)	1	
18529AA	Converter Reactor, F3A (2 Bushing) (2.900" Tall) .926"ID At Converter Splines	1	
18529B	Converter Reactor, F3A (1 Bushing) (2.920" Tall) .850"ID At Converter Splines	1	
18529BA	Converter Reactor, F3A (1 Bushing) (2.920" Tall) .820"ID At Converter Splines	1	
18530	Pump Gears, F3A	1	
18543	Flange, F3A Pump Drive	1	
18554	Drum, F3A Forward (With 3 Holes For # 231) (Uses A 1.373"OD Bearing # 229) (2 1/2" Tall)	1	FT01-19-511
18554AA	Drum, F3A Forward (With 3 Holes For # 231) (Uses A 1.373"OD Bearing # 229) (2 5/8" Tall)	1	
18554AB	Drum, F3A Forward (With 1 Piece Bearing # 232) (Uses A 1.373"OD Bearing # 229) (2 5/8" Tall)	1	
18554B	Drum, F3A Forward (With 1 Piece Bearing # 232) (Uses A 1.647"OD Bearing # 229) (2 5/8" Tall)	1	
18554BA	Drum, F3A Forward (With 3 Holes For # 231) (Uses A 1.647"OD Bearing # 229) (2 5/8" Tall)	1	
18554BB	Drum, F3A Forward (With 1 Piece Bearing #232) (Uses A 1.647"OD Bearing # 229) (2 1/2" Tall)	1	
18554BC	Drum, F3A Forward (With 3 Holes For # 231) (Uses A 1.647"OD Bearing # 229) (2 1/2" Tall)	1	
18555A	Drum, F3A Direct Clutch	1	
18564	Piston Kit, F3A Forward Drum	1	
18565	Piston Kit, F3A Direct Drum	1	
18567	Piston Kit, F3A Low & Reverse Clutch	1	
18574	Hub, F3A Forward Clutch (Front Planet Ring Gear Hub)	1	
18582A	Planet, F3A Front (3 Gear) (1 Groove)	1	
18582AA	Planet, F3A Front (3 Gear) (No Groove)	1	FT01-19-540
18582B	Planet, F3A Front (4 Gear) (1 Groove)	1	
18584A	Planet, F3A Rear (1 Groove)	1	
18584AA	Planet, F3A Rear (No Groove)	1	
18592A	Ring Gear, F3A Front Planet (1 Groove)	1	
18592AA	Ring Gear, F3A Front Planet (No Groove)	1	FT01-19-533
18594AK	Ring Gear W/Hub, F3A Rear With Park Gear (1 Groove)	1	
18594AAK	Ring Gear W/Hub, F3A Rear With Park Gear (No Groove)	1	
18612A	Sun Gear, F3A (1 Groove) 2 1/16" Long	1	
18612AA	Sun Gear, F3A (No Groove) 2 1/16" Long	1	
18619A	Spacer, F3A Sungear (Fits A 1 Groove Sungear)	1	
18619AA	Spacer, F3A Sungear (Fits A No Groove Sungear)	1	
18622A	Shell, F3A Connecting (Fits A 1 Groove Sungear)	1	
18622AA	Shell, F3A Connecting (Fits A No Groove Sungear)	1	FT01-19-565

PART #	SPRAGS & ONE WAY CLUTCHES	QTY.	REFERENCE #
18642	Sprag Assembly, F3A (16 Segments) With Outer Race	1	
18642A	Sprag Assembly, F3A (24 Segments) With Outer Race	1	

© Whatever It Takes Transmission Parts. Inc.

PART #	HARD PARTS (Continued)	QTY.	REFERENCE #
18662	Inner Race, F3A Sprag	1	
18671	Pump Shaft, F3A (14 3/16” Long)	1	
18671A	Pump Shaft, F3A (13 1/2” Long)	1	
18673	Turbine Shaft, F3A (1 Bushing) 11” Long (With No Snap Ring Groove)	1	
18673A	Turbine Shaft, F3A (1 Bushing) 11” Long (With 1 Snap Ring Groove)	1	
18673AA	Turbine Shaft, F3A (1 Bushing) 10 1/2” Long (With Snap Ring Groove)	1	
18673B	Turbine Shaft, F3A (2 Bushing Type) 11” Long	1	
18673C	Turbine Shaft, F3A (2 Bushing Type) 11 1/8” Long	1	
18679	Shaft, F3A Idler Gear	1	
18680	Governor Assembly, F3A (15 Teeth) Cast Iron Shank	1	
18680A	Governor Assembly, F3A (15 Teeth) Aluminum Shank	1	
18686	Cover, F3A Governor	1	
18714K	Idler Gear W/Shaft, F3A (34 Teeth) 1.165” Wide (4.075”OD)	1	
18714CAK	Idler Gear W/Shaft, F3A (35 Teeth) 1.065” Wide (3.707”OD) (No Groove)	1	
18714CBK	Idler Gear W/Shaft, F3A (35 Teeth) 1.065” Wide (3.707”OD) (3 Groove)	1	
18714DK	Idler Gear W/Shaft, F3A (37 Teeth) .905” Wide (3.960”OD)	1	
18714DAK	Idler Gear W/Shaft, F3A (37 Teeth) 1.065” Wide (3.960”OD)	1	
18714DBK	Idler Gear W/Shaft, F3A (37 Teeth) 1.263” Wide (3.960”OD)	1	
18715A	Differential Assembly, F3A (67 Teeth) 1 1/8” Wide Gear	1	
18715B	Differential Assembly, F3A (69 Teeth) .870” Wide Gear	1	
18715BA	Differential Assembly, F3A (69 Teeth) 1 1/8” Wide Gear	1	
18715BB	Differential Assembly, F3A (69 Teeth) .960” Wide Gear (1 Groove)	1	
18715BC	Differential Assembly, F3A (69 Teeth) .960” Wide Gear (No Groove)	1	
18715C	Differential Assembly, F3A (71 Teeth) (4 Groove)	1	
18715D	Differential Assembly, F3A (65 Teeth) 1” Wide Gear	1	
18725A	Retainer, F3A Differential	1	
18730A	Pinion, F3A (Output Gear) 19 Teeth (1.240” Wide Gear) 2.455”OD	1	
18730B	Pinion, F3A (Output Gear) 19 Teeth (1.163” Wide Gear) 2.165”OD	1	
18730BA	Pinion, F3A (Output Gear) 19 Teeth (.980” Wide Gear) 2.170”OD	1	
18730C	Pinion, F3A (Output Gear) 20 Teeth (1.365” Wide Gear) 2.215”OD	1	
18730CA	Pinion, F3A (Output Gear) 19 Teeth (1.080” Wide Gear) 2.200”OD	1	
18730D	Pinion, F3A (Output Gear) 20 Teeth (1.135” Wide Gear) 2.445”OD	1	
18730E	Pinion, F3A (Output Gear) 22 Teeth (1.250” Wide Gear) 2.460”OD (3 Groove)	1	
18735	Idler Cover, F3A (Aluminum)	1	
18735A	Idler Cover, F3A (Cast Iron) (Uses A No Tab Washer)	1	
18735B	Idler Cover, F3A (Cast Iron) (Uses A 3 Tab Washer)	1	
18740	Valve Body, F3A (Non Lock-Up)	1	
18740A	Valve Body, F3A (Lock-Up)	1	

PART #	VALVE BODY COMPONENTS	QTY.	REFERENCE #
18741G-5	Check Ball, F3A Valve Body (.218”) (Torlon)	AR	

PART #	HARD PARTS (Continued)	QTY.	REFERENCE #
18750	Bell Housing, F3A (Top Bolts 3 5/8”) 13 Bolts To Case	1	
18750A	Bell Housing, F3A (Top Bolts 5 1/8”) 13 Bolts To Case	1	
18750B	Bell Housing, F3A (Top Bolts 6 1/4”) 14 Bolts To Case	1	
18750C	Bell Housing, F3A (Top Bolts 6 1/4”) 13 Bolts To Case	1	
18750D	Bell Housing, F3A (Top Bolts 5”) 15 Bolts To Case	1	
18750E	Bell Housing, F3A (Top Bolts 2”) GLC	1	
18750G	Bell Housing, F3A (Top Bolts 5 1/2”) 323 & Tracer	1	
18750H	Bell Housing, F3A (Top Bolts 4 1/2”) 626	1	
18750J	Bell Housing, F3A (Round Bell) 2 Studs For Mount (Storm)	1	
18750JA	Bell Housing, F3A (Round Bell) 1 Studs For Mount (Spectrum)	1	
18750L	Bell Housing, F3A (Top Bolts Are Offset) Festiva (No Differential Bearing Retainer)	1	
18760	Case, F3A (13 Bolts To Bell) With 2 Threaded Cable Bracket Holes On Top	1	
18760A	Case, F3A (13 Bolts To Bell) No Threaded Cable Bracket Holes	1	
18760B	Case, F3A (15 Bolts To Bell) No Threaded Cable Bracket Holes	1	
18760C	Case, F3A (15 Bolts To Case) With 2 Threaded Cable Bracket Holes On Top	1	
18765	Pan, F3A Bottom (.850” Deep At Deep End)	1	
18765A	Pan, F3A Bottom (1.380” Deep At Deep End)	1	
18765B	Pan, F3A Bottom (1.610” Deep At Deep End)	1	
18765C	Pan, F3A Bottom (2.500” Deep At Deep End)	1	
18765D	Pan, F3A Bottom (2.330” Deep At Deep End)	1	
18776K	Bolt Set, F3A Bell Housing To Case	1	
18777K	Bolt Set, F3A Pump Body To Case	1	
18778K	Bolt Set, F3A Stator To Pump Body	1	

© Whatever It Takes Transmission Parts. Inc.

PART #	HARD PARTS (Continued)	QTY.	REFERENCE #
18779K	Bolt Set, F3A Pan To Case	1	
18780K	Bolt Set, F3A Converter Reactor To Bell Housing	1	
18782K	Bolt Set, F3A Valve Body To Case	1	
18787K	Bolt Set, F3A Idler Cover To Bell	1	
18799	Nut, F3A Idler Shaft	1	
18848	Gear, F3A Driven Speed-O With Housing	1	
18855	Cushion, F3A Forward Clutch	1	
18857	Cushion, F3A Low/Reverse Clutch	1	
18876	Snap Ring, F3A Holds Pressure Plate In Forward Drum	1	
18877	Snap Ring, F3A Holds Forward Clutch Retainer In	1	
18878	Snap Ring, F3A Holds Pressure Plate In Direct Drum	1	
18879	Snap Ring, F3A Holds Direct Clutch Retainer In	1	
18882	Snap Ring, F3A Holds Forward Hub To Front Ring Gear	1	
18885	Snap Ring, F3A Holds Low/Reverse Clutch Hub In	1	
18890	Snap Ring, F3A Holds Rear Planet To Sprag Inner Race	1	
18892	Snap Ring, F3A Holds Sprag Assembly To Case	1	
18896	Snap Ring, F3A Holds Servo In Case	1	
18905	Servo Assembly, F3A	1	
18906	Spring, F3A Servo	1	
18907	Piston, F3A Servo	1	
18909	Cover, F3A Servo	1	
18916	Strut, F3A Band	1	
18964	Piston, F3A Forward Clutch	1	
18965	Piston, F3A Direct Clutch	1	
18967	Piston, F3A Low/Reverse Clutch	1	
18974	Spring, F3A Forward Clutch Return	1	
18975	Spring, F3A Direct Clutch Return	1	
18977	Spring, F3A Low/Reverse Clutch Return	1	
18984	Retainer, F3A Forward Clutch Spring	1	
18985	Retainer, F3A Direct Clutch Spring	1	
18987	Hub, F3A Low/Reverse Clutch	1	
18991	Linkage Assembly, F3A (Internal)	1	
18999	Lube Tube Set, F3A (2 Tubes)	1	

© Whatever It Takes Transmission Parts. Inc.

Technical Bulletin #638

- Transmission: F3A
- Subject: Slips in 3rd/Reverse , no 3rd/ reverse, missing plug in servo bore
- Application: Ford Aspire

August 2001

F3A

Slips in 3rd/Reverse, No 3rd/Reverse, Missing Plug in Servo Bore

Ford Aspire vehicles with an F3A transmission have a steel plug in the case inside of the servo bore. This plug is staked in at the factory, and often falls out of it's hole when the servo is disassembled. If this plug falls out and the hole is not plugged, front clutch/servo release oil will be exhausted and the result is a 3rd/reverse slip, or no 3rd/reverse. It is not critical that this specific plug be reinstalled, but the hole must be plugged off.

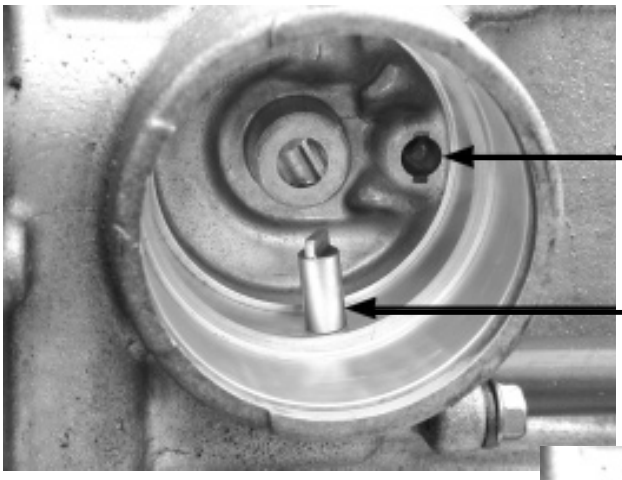

This hole must be plugged.

Plug/Pin

Approximate Plug Dimensions
.313" Diameter
.728" Overall Length
.078" Flatted End Thickness

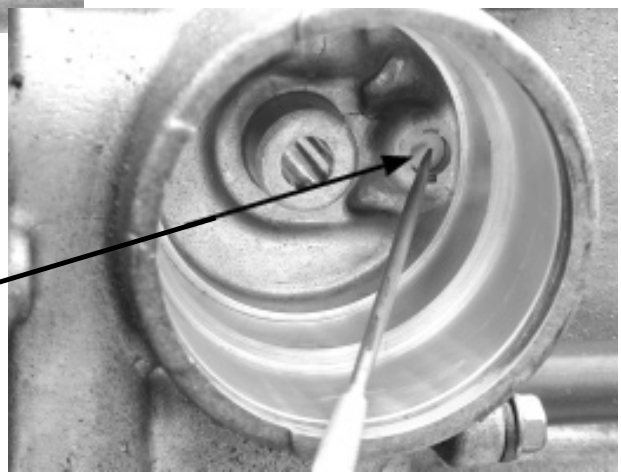

The factory installed the flatted end in first (The end that resembles a flat blade screw driver).

NOTE: This part is not serviced by Ford.

MAZDA

1-800-940-0197
© Whatever It Takes Transmission Parts. Inc.

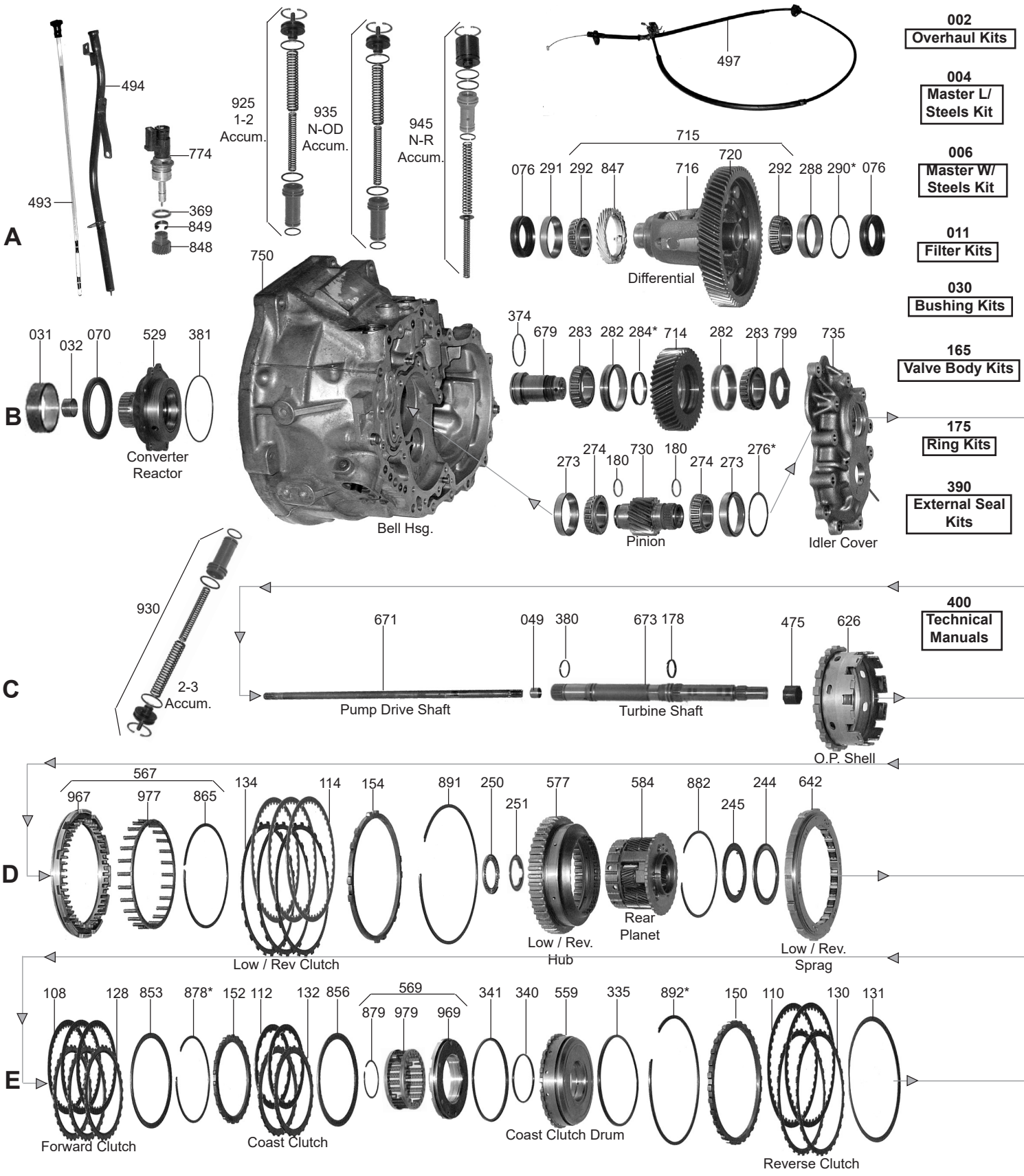

000 P&R Kits

002 Overhaul Kits

004 Master L/ Steels Kit

006 Master W/ Steels Kit

011 Filter Kits

030 Bushing Kits

165 Valve Body Kits

175 Ring Kits

390 External Seal Kits

400 Technical Manuals

4EAT-F/F4E / F4EAT / F4A-EL

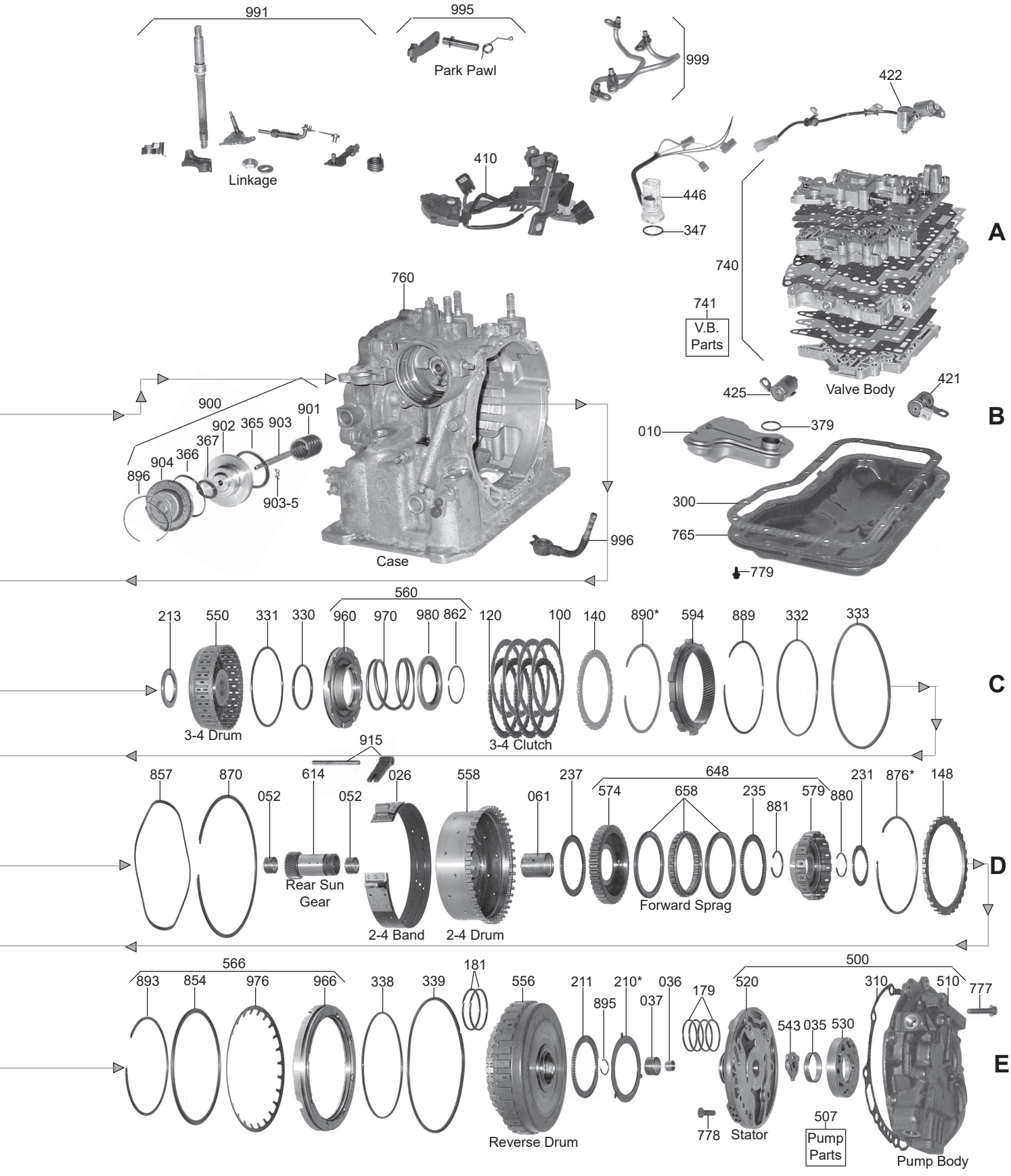

MAZDA

1-800-940-0197

© Whatever It Takes Transmission Parts. Inc.

PART #	PAPER & RUBBER KIT	QTY.	REFERENCE #
38000AB	Paper & Rubber Kit, 4EAT-F 1990-Up (Combo)	1	

PART #	OVERHAUL KITS	QTY.	REFERENCE #
38002AB	Overhaul Kit, 4EAT-F 1990-Up (Combo)	1	

PART #	MASTER L/STEEL KIT	QTY.	REFERENCE #
38004AB	Master L/Steels Kit, 4EAT-F 1990-Up (Combo)	1	

PART #	MASTER W/STEEL KIT	QTY.	REFERENCE #
38006AB	Master W/Steels Kit, 4EAT-F 1990-Up (Combo)	1	

PART #	FILTER	QTY.	REFERENCE #
38010A	Filter, F4E 2WD 1990-Up	1	F1CZ-7A098-A
38010B	Filter, F4E AWD (All Metal) 1990-Up	1	

PART #	FILTER KIT	QTY.	REFERENCE #
38011A	Filter Kit, F4E 1990-Up	1	

PART #	BANDS	QTY.	REFERENCE #
38026A	Band, F4E 1990-Up	1	

PART #	BUSHINGS	QTY.	REFERENCE #
38030	Bushing Kit, F4AEL/4EAT-F 1990-06	1	
28031A	Bushing, F4E Converter Hub (57.1mm) 1990-Up	1	
38032A	Bushing, F4E Converter Reactor (Small) To Turbine Shaft	1	
38035A	Bushing, F4E Inner Pump Gear 1990-Up	1	
38036	Bushing, F4E Stator (Small) For Pump Drive Shaft	1	
38037A	Bushing, F4E Stator (Large) For Turbine Shaft	1	
38052A	Bushing, F4E Sun Gear 1990-Up	2	
38061A	Bushing, F4E 2-4 Drum	1	

PART #	METAL CLAD SEALS	QTY.	REFERENCE #
28070	Seal, F4E Front (Narrow) 1990-Up	1	
28070A	Seal, F4E Front (Wide) 1990-Up	1	
28078	Seal, F4E Speed-O Shaft	1	
38076A	Seal, F4E Axle (Both Sides)(.349” Thick)(Can Use 42076A)	2	
42076A	Seal, F4E Axle (Both Sides)(.395” Thick)(Can Use 38076A)	2	
38089A	Retainer, F4E Front Seal (3 Bolt Metal)	1	

PART #	FRICTION CLUTCH	QTY.	REFERENCE #
38100A	Friction, F4E 3-4 Clutch (.062”) (22 Teeth) 1990-Up	4	F1CZ-7B442-C
38108A	Friction, F4E Forward Clutch (.062”) (42 Teeth) 1990-Up	3	F1CZ-7B164-6
38108AA	Friction, F4E (KIA) Forward Clutch (.072”)(42 Teeth) 2003-Up	3	
38110A	Friction, F4E Reverse Clutch (.062”) (45 Teeth) 1990-Up	2	F1CZ-7B442-A
38112A	Friction, F4E Coast Clutch (.062”) (16 Teeth) 1990-Up	2	F1CZ-7B164-E
38114A	Friction, F4E Low/Reverse (.062”) (48 Teeth) 1990-Up	4	F1CZ-7B442-E
38119A	Friction Module, 4EAT-4F 1990-Up	1	

PART #	STEEL CLUTCH	QTY.	REFERENCE #
38120A	Steel, F4E 3-4 Clutch (.063”) (38 Teeth) 1990-Up	4	
38120AA	Steel, F4E 3-4 Clutch (.071”) (38 Teeth) 1990-96	4	
38120AB	Steel, F4E 3-4 Clutch (.091”) (38 Teeth) 1990-97	4	
38120AC	Steel, F4E 3-4 Clutch (.130”) (38 Teeth) 1998-Up	4	
38128A	Steel, F4E Forward Clutch (.063”) (32 Teeth) 1990-Up	3	
38130A	Steel, F4E Reverse Clutch (.063”) (32 Teeth) 1990-Up	2	
38131A	Steel, F4E Reverse Clutch (.057”) 6 7/8”OD (Dished) 1990-Up	1	
38132A	Steel, F4E Coast Clutch (.063”) (26 Teeth) 1990-Up	2	
38134A	Steel, F4E Low/Reverse Clutch (.063”) (16 Teeth) 1990-Up	4	

© Whatever It Takes Transmission Parts. Inc.

38139A	Steel Module, 4EAT-F Mazda/Ford 1990-Up	1	

PART #	CLUTCH PRESSURE PLATES	QTY.	REFERENCE #
38140A	Pressure Plate, F4E 3-4 Clutch (.140")	1	F1CZ-7B066-D
38140B	Pressure Plate, F4E 3-4 Clutch (.175")	1	
38148A	Pressure Plate, F4E Forward Clutch (.155")(32 Teeth)(4.333"ID) 1990-Up	1	
38148B	Pressure Plate, F4E Forward Clutch (.180")(32 Teeth)(4.333"ID) 1990-Up	1	
38150A	Pressure Plate, F4E Reverse Clutch	1	
38152A	Pressure Plate, F4E Coast Clutch	1	F1CZ-7B066-B
38154A	Pressure Plate, F4E Low/Reverse Clutch	1	

PART #	VALVE BODY KITS	QTY.	REFERENCE #
T38165A	Shift Kit, F4A-EL / 4EAT-F 1990-Up (Transgo)	1	SK ® F4A
A38165A	Valve Body Kit, F4A-EL (Translab)	1	

PART #	OIL SEALING RINGS	QTY.	REFERENCE #
38175A	Ring Kit, F4E Full (Metal) 1990-Up	1	
38175AT	Ring Kit, F4E Full (Teflon) 1990-Up	1	
38175B	Ring Kit, F4E Short (4 Pump Rings) Metal 1990-Up	1	
38179A	Ring, F4E Pump Stator (Metal) 1990-Up	4	
38179AT	Ring, F4E Pump Stator (Teflon) 1990-Up	4	F1CZ-7D019-A
38181AT	Ring, F4E Coast Clutch (Teflon) 1990-Up	2	
38180A	Ring, F4E Output Gear (Metal) 1990-Up	2	
38178AT	Ring, F4E Turbine Shaft (Teflon) 1990-Up	1	
38191AT	Ring, F4E 2-3 / Neutral-Overdrive (Small) Scarf Cut (Teflon) 1990-Up	2	
38191AAT	Ring, F4E Neutral-Reverse Accumulator (Small) Butt Joint (Teflon) 1990-Up	1	
38192AT	Ring, F4E 2-3 / Neutral-Overdrive / Neutral-Reverse Accumulator (Large) Scarf Cut (Teflon) 1990-Up	3	

PART #	WASHERS & BEARINGS	QTY.	REFERENCE #
38210A	Race, F4E Stator To reverse Drum (1.2mm)	1	
38210AA	Race, F4E Stator To reverse Drum (1.4mm)	1	
38210AB	Race, F4E Stator To reverse Drum (1.6mm)	1	
38210AC	Race, F4E Stator To reverse Drum (1.8mm)	1	
38210AD	Race, F4E Stator To reverse Drum (2.0mm)	1	
38210AE	Race, F4E Stator To reverse Drum (2.2mm)	1	
38211A	Bearing W/Race, F4E Stator To Reverse Drum	1	F1CZ-7F241-A
38213A	Bearing W/Race, F4E Shell To 3-4 Clutch Drum	1	F1CZ-7F404-A
38231A	Bearing W/Race, F4E Reverse Drum To Hub	1	
38235A	Bearing, F4E Drum With Sun Gear To Forward Clutch Hub	1	F1CZ-7A623-A
38237A	Bearing, F4E Band Drum To Forward Sprag	1	
38244A	Bearing, F4E Planet To Sun Gear Drum	1	
38245A	Race, F4E Planet To Sun Gear Drum	1	F1CZ-7F368-A
38250A	Race, F4E Drum To Planet	1	
38251A	Bearing W/Race, F4E Drum To Planet	1	F1CZ-7D234-A
32254	Cone Bearing, F4E Differential (Front & Rear) 1.378"ID (23 Rollers)	2	5224300
32254K	Bearing & Race Kit, F4E Differential (Front & Rear) 1.378"ID (23 Rollers)	2	
32255	Cup Race, F4E Differential (Front & Rear)	2	4567259
38273A	Cup Race, F4E Converter Reactor To Pinion Bearing	1	
38276A	Shim, F4E Pinion Cup Race To Pinion Retainer	1	
38282A	Cup Race, F4E Idler Gear	2	
38283A	Cone Bearing, F4E Idler Gear & Pinion Gear	2-4	

© Whatever It Takes Transmission Parts. Inc.

PART #	WASHERS & BEARINGS (Continued)	QTY.	REFERENCE #
38284A	Shim, F4E Between Idler Gear Bearings (.150")	1	30801815
38284AA	Shim, F4E Between Idler Gear Bearings (.152")	1	30802815
38584AB	Shim, F4E Between Idler Gear Bearings (.154")	1	30803815
38284AC	Shim, F4E Between Idler Gear Bearings (.156")	1	30804815
38284AD	Shim, F4E Between Idler Gear Bearings (.158")	1	30805815
38284AE	Shim, F4E Between Idler Gear Bearings (.159")	1	30806815
38284AF	Shim, F4E Between Idler Gear Bearings (.161")	1	30807815
38284AG	Shim, F4E Between Idler Gear Bearings (.163")	1	
38284AH	Shim, F4E Between Idler Gear Bearings (.165")	1	
38284AJ	Shim, F4E Between Idler Gear Bearings (.167")	1	
38284AK	Shim, F4E Between Idler Gear Bearings (.169")	1	
38284AL	Shim, F4E Between Idler Gear Bearings (.171")	1	
38284AM	Shim, F4E Between Idler Gear Bearings (.173")	1	
38284AN	Shim, F4E Between Idler Gear Bearings (.175")	1	
38284AP	Shim, F4E Between Idler Gear Bearings (.177")	1	
38284AQ	Shim, F4E Between Idler Gear Bearings (.179")	1	
38284AR	Shim, F4E Between Idler Gear Bearings (.181")	1	
38284AS	Shim, F4E Between Idler Gear Bearings (.183")	1	
38284AT	Shim, F4E Between Idler Gear Bearings (.185")	1	
38284AU	Shim, F4E Between Idler Gear Bearings (.187")	1	
38288A	Cup Race, F4E Differential (Rear) (Use 32255)	1	
38289A	Cone Bearing, F4E Differential (Rear) (Use 32254)	1	
38290A	Shim, F4E Differential Cup Race To Case	1	
38291A	Cup Race, F4E Differential (Front) (Use 32255)	1	
38292A	Cone Bearing, F4E Differential (Front) (Use 32254)	1	

PART #	GASKETS & RUBBER COMPONENTS	QTY.	REFERENCE #
38300A	Gasket, F4E Pan (19 Holes) 1990-Up (Cork)	1	
38300AF	Gasket, F4E Pan (19 Holes) 1990-Up (Farpak)	1	
38310A	Gasket, F4E Front Pump 1990-Up	1	
38320AK	Gasket Kit, F4E Valve Body 1990-97	1	
38320BK	Gasket Kit, F4E Valve Body 1998-Up (All Except Kia)	1	
38350A	O-Ring, F4E 1-2 / 2-3 / Nuetral-Overdrive / Neutral-Reverse Accumulator Stop (Cover)	4	
38351A	D-Ring, F4E 1-2 Accumulator (Small)	1	
38352A	D-Ring, F4E 1-2 Accumulator (Large)	1	
38369A	O-Ring, F4E Speed-O Housing To Case O-Ring 1990-Up	1	
38379A	D-Ring, F4E Filter O-Ring	1	
38381A	O-Ring, F4E Converter Reactor	1	
38390	External Seal Kit, F4E/F4EAT/F4A-EL With Seals & Pan Gasket 1990-98	1	

PART #	TECHNICAL MANUALS	QTY.	REFERENCE #
38400	Technical Manual, F4E Mazda/Ford 1990-Up	1	F4EAT
38401	Technical Manual CD, F4E Mazda/Ford 1990-Up	1	

PART #	ELECTRICAL COMPONENTS	QTY.	REFERENCE #
38410A	Switch, F4E Neutral (With Connector On End Of Wire Harness) 1991-96	1	
38410AA	Neutral Switch, F4E (With Connector Made On Switch & Points Out To Side Of The Transmission) (Has No Wires On Switch) 1997-02	1	
38410AB	Neutral Switch, F4E (With Connector Made On Switch & Points Up) (No Wire Harness) 1997-Up	1	
38410AC	Neutral Switch, F4E (With Connector Made On Switch & Points To The Rear Of The Transmission) (No Wire Harness) 1997-Up	1	
38417A	Pulse Generator, F4E	1	
38420A	Solenoid Set, F4E (For 4 Solenoid Valve Body) 1991-Up	1	
38421A	Solenoid, F4E 1-2 Shift (Green Connector) 1990-Up (Has A Long Bent Bracket)	1	35678121
38422A	Solenoid, F4E 2-3 & 3-4 Shift (One Solenoid Does Both Shifts)	1	35678122
38425A	Solenoid, F4E TCC (Lock-Up) (Beige Connector) 1990-Up (Has A Short Straight Bracket)	1	
38431A	Solenoid, F4E EPC 1998-Up (For Valve Body With 5 Solenoids) Solenoid Is .940"OD (All Except Kia)	1	
38431B	Solenoid, F4E EPC 1998-Up (For Valve Body With 5 Solenoids) Solenoid Is .800"OD	1	
38446A	Wire Harness, F4E Internal (6 Pin Case Connector With 2 Two Wire & 2 One Wire Connectors)(With A Two Wire TOT Sensor) 1990-Up	1	
38446AA	Wire Harness, F4E Internal (7 Pin Case Connector With 2 Two Wire & 3 One Wire Connectors)(With A Two Wire TOT Sensor) 1990-Up	1	

© Whatever It Takes Transmission Parts. Inc.

PART #	MISC. COMPONENTS	QTY.	REFERENCE #
38475A	Sleeve, F4E Turbine Shaft (Teflon)	1	

PART #	HARD PARTS	QTY.	REFERENCE #
38500A	Pump, F4E Complete (With 4 Lube Holes Between Rings)	1	
38500B	Pump, F4E Complete (With 6 Lube Holes Between Rings)	1	

PART #	PUMP COMPONENTS	QTY.	REFERENCE #
S38507PK	Pump Discharge Valve Kit, F4E With Springs (Sonnax) (Increases Pump Flow To Pressure Regulator)	1	K74878

PART #	HARD PARTS (Continued)	QTY.	REFERENCE #
38510A	Pump Body W/Gears, F4E (With 3 Lube Holes Between Bolts)	1	
38510B	Pump Body W/Gears, F4E (With 4 Lube Holes Between Bolts)	1	
38520A	Stator, F4E (With 4 Lube Holes Between Rings)	1	
38520B	Stator, F4E (With 6 Lube Holes Between Rings)	1	
38529A	Converter Reactor, F4E (31 Splines)	1	
38550A	Drum, F4E 3-4 Clutch (Stamped Steel) With 38 Holes Outside	1	
38550B	Drum, F4E 3-4 Clutch (Stamped Steel) With 57 Holes Outside	1	
38550C	Drum, F4E 3-4 Clutch (Smooth Outside) With 57 Holes Outside	1	
38556A	Drum, F4E Reverse & Forward Clutch	1	
38558A	Drum, F4E (Band Drum) With Sun Gear 1986-Up	1	43678261
38559A	Drum, F4E Coast Clutch	1	
38560A	Piston Kit, F4E 3-4 Clutch (.458” Thick Piston)	1	
38560B	Piston Kit, F4E 3-4 Clutch (.382” Thick Piston)	1	
38566A	Piston Kit, F4E Reverse Clutch	1	
38567A	Piston Kit, F4E Low/Reverse Clutch	1	
38569A	Piston Kit, F4E Coast Clutch	1	
38574A	Clutch Hub, F4E Forward Clutch (Less Sprag)	1	
38577A	Clutch Hub & Inner Race, F4E Low/Reverse Clutch (34 Teeth Hub)	1	F1CZ-7A089-A
38579A	Clutch Hub, F4E Coast Clutch (With Inner Race)	1	
38584A	Planet, F4E (34 Teeth On Flange) With .275” Tall Step In Center Of Flange (Inside Where #245 Washer Sets)	1	
38584B	Planet, F4E (34 Teeth On Flange) No Raised Step In Center Of Flange (Inside Where #245 Washer Sets)	1	
38594A	Ring Gear, F4E Planet (10 Lugs, 5 1/8”OD)	1	
38614A	Sun Gear, F4E (2 13/16” Long)	1	
38626A	Shell, F4E Output With 19 Lug Park Gear	1	F3CZ-7F283-A
38626AA	Shell, F4E Output With 12 Lug Park Gear	1	

PART #	SPRAGS & ONE WAY CLUTCHES	QTY.	REFERENCE #
38642A	Sprag, F4E Low/Reverse With Outer Race (.590” Wide)	1	F1CZ-7B456-A
38642AA	Sprag, F4E Low/Reverse With Outer Race (.605” Wide)	1	
38648A	Sprag Assembly, F4E Forward With Inner & Outer Race	1	
38658A	Sprag, F4E Forward	1	F1CZ-7A089-B

PART #	HARD PARTS (Continued)	QTY.	REFERENCE #
38671A	Pump Shaft, F4E Drive (13 9/16” Long)	1	
38673A	Turbine Shaft, F4E (11 3/8” Long)	1	
38679A	Shaft, F4E Idler Gear	1	
38714AK	Idler Gear, F4E With Bearings (39 Teeth) 1 3/16” Thick (3 Groove)	1	
38714BK	Idler Gear, F4E With Bearings (40 Teeth) 1 Groove	1	
38714CK	Idler Gear, F4E With Bearings (38 Teeth) 1.150” Thick (4 Grooves)	1	
38714DK	Idler Gear, F4E With Bearings (41 Teeth)	1	
38715A	Differential Assembly, F4E With Ring Gear (71 Teeth) 3 Groove (Fits 38714AK & 38730B)	1	
38715AA	Differential Assembly, F4E With Ring Gear (71 Teeth) 1 Groove (Fits 38715BK & 38730A)	1	
38715AB	Differential Assembly, F4E With Ring Gear (71 Teeth) 4 Groove	1	
38715B	Differential Assembly, F4E With Ring Gear (70 Teeth) 1 Groove	1	
38715C	Differential Assembly, F4E With Ring Gear (69 Teeth) 1 Groove	1	
38715CA	Differential Assembly, F4E With Ring Gear (69 Teeth) 2 Groove	1	
38715CC	Differential Assembly, F4E With Ring Gear (69 Teeth) 1 Wide Groove On Bearing Side	1	

© Whatever It Takes Transmission Parts. Inc.

PART #	HARD PARTS (Continued)	QTY.	REFERENCE #
38715CD	Differential Assembly, F4W With Ring Gear (69 Teeth) 1 Narrow Groove On Bearing Side (Fits 38714DK & 38730D)	1	
38715CE	Differential Assembly, F4E With Ring Gear (69 Teeth) 1 Wide Groove On Housing Side	1	
38715D	Differential Assembly, F4E With Ring Gear (73 Teeth) 3 Groove	1	
38715DA	Differential Assembly, F4E With Ring Gear (73 Teeth) 4 Groove (Fits 38714CK & 38730C)	1	
38715E	Differential Assembly, F4W With Ring Gear (78 Teeth)	1	
38730A	Pinion, F4E Output Gear With Bearings (19 Teeth) 33 Splines (1 Groove)	1	
38730B	Pinion, F4E Output Gear With Bearings (20 Teeth) 33 Splines (3 Groove)	1	
38730C	Pinion, F4E Output Gear With Bearings (21 Teeth) 33 Splines (4 Groove)	1	
38730D	Pinion, F4E Output Gear With Bearings (17 Teeth) 33 Splines (1 Groove)	1	
38730E	Pinion, F4E Output Gear With Bearings (18 Teeth) 33 Splines (1 Groove)	1	
38730EA	Pinion, F4E Output Gear With Bearings (18 Teeth) (2 Wide Grooves)	1	
38735A	Cover, F4E Idler Gear	1	
38740A	Valve Body, F4E (4 Solenoid) 1.8L (No Tube)	1	F1CZ-7A100-A
38740AA	Valve Body, F4E (4 Solenoid) (With 1 Tube) (Has The 2-3 Timing Valve By Itself & No 3-2 Timing Valve)	1	
38740B	Valve Body, F4E (4 Solenoid) 1.9L & 2.0L (With 1 Tube)(Has A 2-3 & 3-2 Timing Valve)	1	F1CZ-7A100-B
38740BD	Valve Body, F4E (5 Solenoid) (With 1 Tube)(Has The 2-3 Timing Valve By Itself & No 3-2 Timing Valve)	1	
38740C	Valve Body, F4E (5 Solenoid) With 1 Tube (Has The 2-3 Timing Valve & The 3-2 Timing Valve Side By Side)	1	
38740CA	Valve Body, F4E (5 Solenoid) No Tube	1	

PART #	VALVE BODY COMPONENTS	QTY.	REFERENCE #
S38741BAK	Boost Valve Kit, F4E (Valve, Sleeve & End Plug)(Sonnax)(For Units With Electronic Transmission)	1	74846-01K
S38741DA	Valve, F4E Pressure Modulator (Oversize) (Sonnax) (Use W/Tool # T-74846-TL4)	1	74846-04
T-74846-TL4	Reamer & Jig, F4E (For S38741DA) (Sonnax)	1	74846-TL4
S38741PA	Valve, F4E Pressure Regulator (Oversize) Sonnax) (Use W/Tool # T-74846-TL5)	1	74846-05
T-74846-TL5	Reamer & Jig, F4E (For S38741PA) (Sonnax)	1	74846-TL5

PART #	HARD PARTS (Continued)	QTY.	REFERENCE #
38750	Bell Housing, F4E (Top Bolts 5 1/8") No Crank Sensor Hole (Cast # FB03)	1	
38750A	Bell Housing, F4E (Top Bolts 5 1/8") No Crank Sensor Hole (Cast # FU65)	1	
38750AA	Bell Housing, F4E (Top Bolts 5 1/8") With Crank Sensor Hole	1	
38750B	Bell Housing, F4E (Top Bolts 6 1/4") No Crank Sensor Hole (Cast #FU60)	1	
38750BA	Bell Housing, F4E (Top Bolts 6 1/4") With Crank Sensor Hole (Cast # FW01)	1	
38750BB	Bell Housing, F4E (Top Bolts 6 1/4") No Crank Sensor Hole (Cast #FW30)	1	
38750BC	Bell Housing, F4E (Top Bolts 6 1/4") With Crank Sensor Hole (Cast # K2A2)	1	
38750C	Bell Housing, F4E (Top Bolts 2 1/8") Cast # FW12	1	
38750D	Bell Housing, F4E (Top Bolts 4 7/8") With Crank Sensor Hole (Cast # K25R)	1	
38760A	Case, F4E (13 Bolts To Bell) Uses Throttle Cable (3 Threaded Bosses On Top For Wire Harness, 2 Are 6mm And 1 Is 12mm)	1	
38760AA	Case, F4E (13 Bolts To Bell) Uses A Throttle Cable (3 Threaded Bosses On Top For Wire Harness, All 3 Are 6mm)	1	
38760AB	Case, F4E (13 Bolts To Bell) Uses A Throttle Cable (2 Threaded Bosses On Top For Wire Harness, Both Are 6mm) There Is Also A Boss With A 12mm Hole That Is Not Threaded	1	
38760B	Case, F4E (13 Bolts To Bell) No Throttle Cable (Cast # KIA) With 4 Threaded Mounting Bosses	1	
38760BA	Case, F4E (13 Bolts To Bell) No Throttle Cable With 3 Threaded Mounting Bosses	1	
38765A	Pan, F4E (Bottom) (1 5/8" At Deepest Point)	1	
38765AA	Pan, F4E (Bottom) (2 1/2" At Deepest Point)	1	
38774A	Speed-O Housing, F4E (With 22 Teeth Gear & 2 Prong Connector) (Cast # F7C6-17271-AB) Aluminum Housing With Plastic Connector	1	
38774AA	Speed-O Housing, F4E (With 22 Teeth Gear & 2 Prong Rectangle Connector) (Cast # TR0100) All Plastic	1	
38774B	Speed-O Housing, F4E (With 23 Teeth Gear & 2 Prong Connector) (Cast # FOC6-17271-AB) Aluminum Housing With Plastic Connector	1	
38776AK	Bolt Set, F4E Bell Housing To Case	1	
38777AK	Bolt Set, F4E Pump To Case	1	
38782AK	Bolt Set, F4E Valve Body To Case	1	
38799A	Nut, F4E Idler Gear	1	
28847A	Gear, F4E Speed-O Drive (25 Teeth) On Differential	1	
28848AK	Gear & Housing, F4E Speed-O Driven (20 Teeth)	1	
38853A	Cushion, F4E Forward Clutch	1	
38854A	Retainer, F4E Reverse Clutch Spring	1	
38856A	Cushion, F4E Coast Clutch	1	

© Whatever It Takes Transmission Parts. Inc.

38857A	Waved Ring, F4E Low/Reverse Clutch (Solid Ring) 1990-97	1	
38857B	Waved Ring, F4E Low/Reverse Clutch (Split, Not Solid) 1997-Up	1	
38862A	Snap Ring, F4E Holds 3-4 Clutch Retainer In Drum	1	
38865A	Snap Ring, F4E Holds Low/Reverse Clutch Retainer In Case	1	
38870A	Snap Ring, F4E Holds Low/Reverse Sprag In Case	1	
38876A	Snap Ring, F4E Holds Forward Pressure Plate In Drum	1	
38878A	Snap Ring, F4E Holds Coast Clutch Pressure Plate In Case	1	
38879A	Snap Ring, F4E Holds Coast Clutch Retainer In Drum	1	
38880A	Snap Ring, F4E Sun Gear To Inner Race (Rear)	1	
38881A	Snap Ring, F4E Sun Gear To Inner Race (Front)	1	
38882A	Snap Ring, F4E Planet To Low/Reverse Sprag Inner Race	1	
38889A	Snap Ring, F4E Holds Ring Gear In Output Shell	1	
38890A	Snap Ring, F4E Holds 3-4 Clutch Pressure Plate In Drum	1	
38891A	Snap Ring, F4E Holds Low/Reverse Pressure Plate In Case	1	
38892A	Snap Ring, F4E Holds Reverse Pressure Plate In Drum	1	
38893A	Snap Ring, F4E Holds Reverse Clutch Retainer In Drum	1	
38895A	Snap Ring, F4E Holds Turbine Shaft To Reverse Drum	1	
38896A	Snap Ring, F4E Holds Servo Cover In Case	1	
38900A	Servo Assembly, F4E 2-4 Band (1.566”OD)	1	
38900B	Servo Assembly, F4E 2-4 Band (2.314”OD)	1	
38900C	Servo Assembly, F4E 2-4 Band (1.410”OD)	1	
28901	Spring, F4E Servo (3 Per Pack) 1.654” Long	1	
28901A	Spring, F4A Servo (3 Per Pack) 1.703” Long		
38901AA	Spring, F4E Servo (3 Per Pack) (Corrects Rough 1-2 & 3-4 Upshift / Helps Prevent Rough 2-3)	1	
38902A	Piston, F4E 2-4 Servo	1	
38904A	Cover, F4E 2-4 Servo	1	
38904B	Cover, F4E 2-4 Servo (2.314”ID)	1	
38904C	Cover, F4E 2-4 Servo (1.410”ID)	1	
38915A	Strut Assembly, F4E 2-4 Band	1	
38925A	Accumulator Assembly, F4E 1-2 With 1 Spring	1	
38925AA	Accumulator Assembly, F4E 1-2 With 2 Springs (1.9L Only)	1	
38930A	Accumulator Assembly, F4E 2-3	1	
38945A	Accumulator, F4E Neutral-Reverse	1	
38950A	Accumulator Assembly, F4E Neutral-Overdrive	1	
38960A	Piston, F4E 3-4 Clutch	1	
38966A	Piston, F4E Reverse Clutch	1	
38967A	Piston, F4E Low/Reverse Clutch	1	
38969A	Piston, F4E Coast Clutch	1	
38970A	Spring, F4E 3-4 Clutch Return	1	36678441
38976A	Spring, F4E Reverse Beveled Return	1	
38977A	Retainer W/Spring, F4E Low/Reverse Clutch	1	
38979A	Retainer W/Spring, F4E Coast Clutch	1	
38980A	Retainer, F4E 3-4 Clutch Spring	1	
38991A	Linkage Assembly, F4E Internal	1	
38995A	Park Pawl Assembly, F4E	1	
38996A	Fitting, F4E Cooler Line	1	
38999A	Tube, F4E Oil	1	

© Whatever It Takes Transmission Parts. Inc.

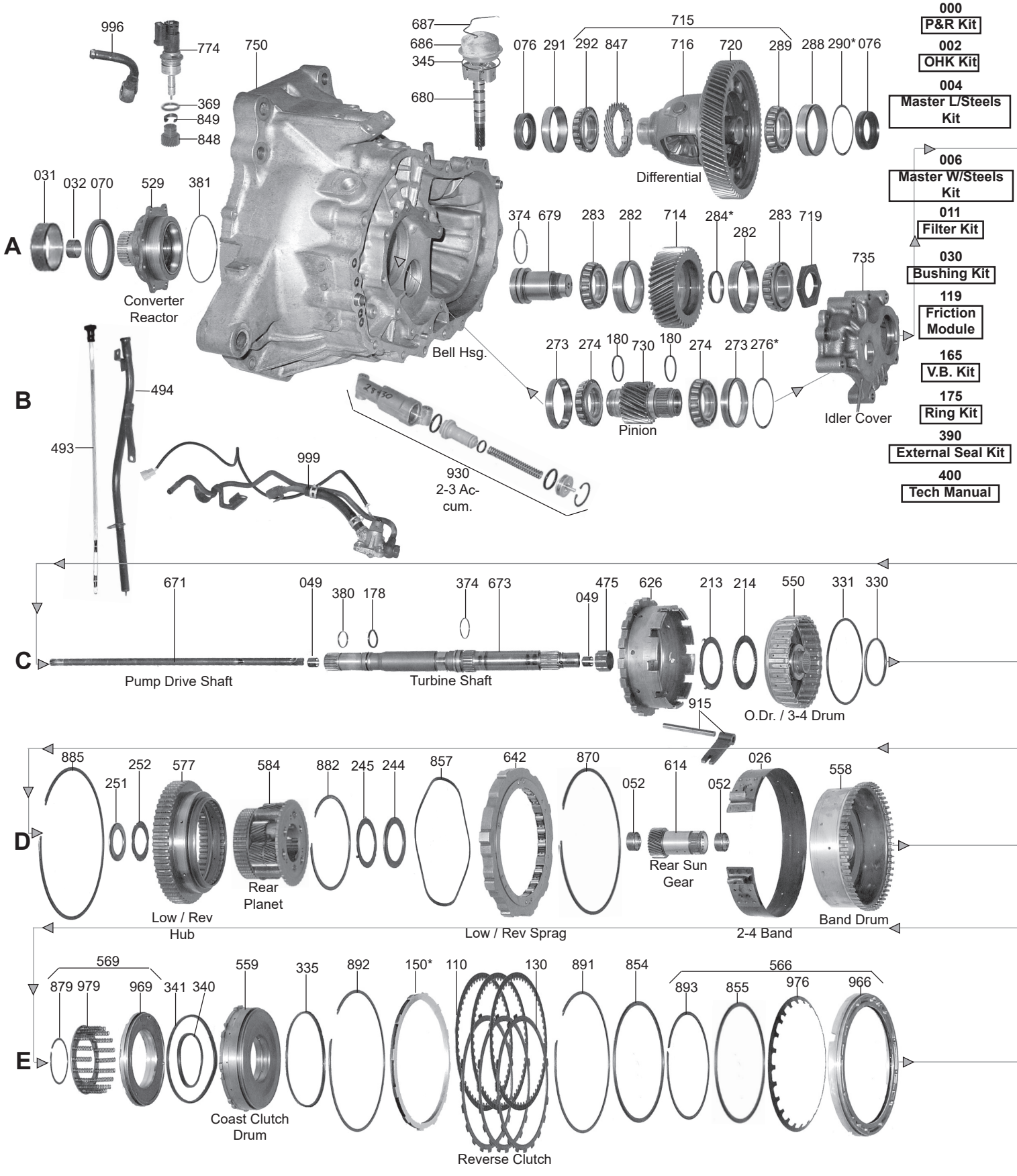

000 P&R Kit
002 OHK Kit
004 Master L/Steels Kit
006 Master W/Steels Kit
011 Filter Kit
030 Bushing Kit
119 Friction Module
165 V.B. Kit
175 Ring Kit
390 External Seal Kit
400 Tech Manual

MAZDA

© Whatever It Takes Transmission Parts. Inc.

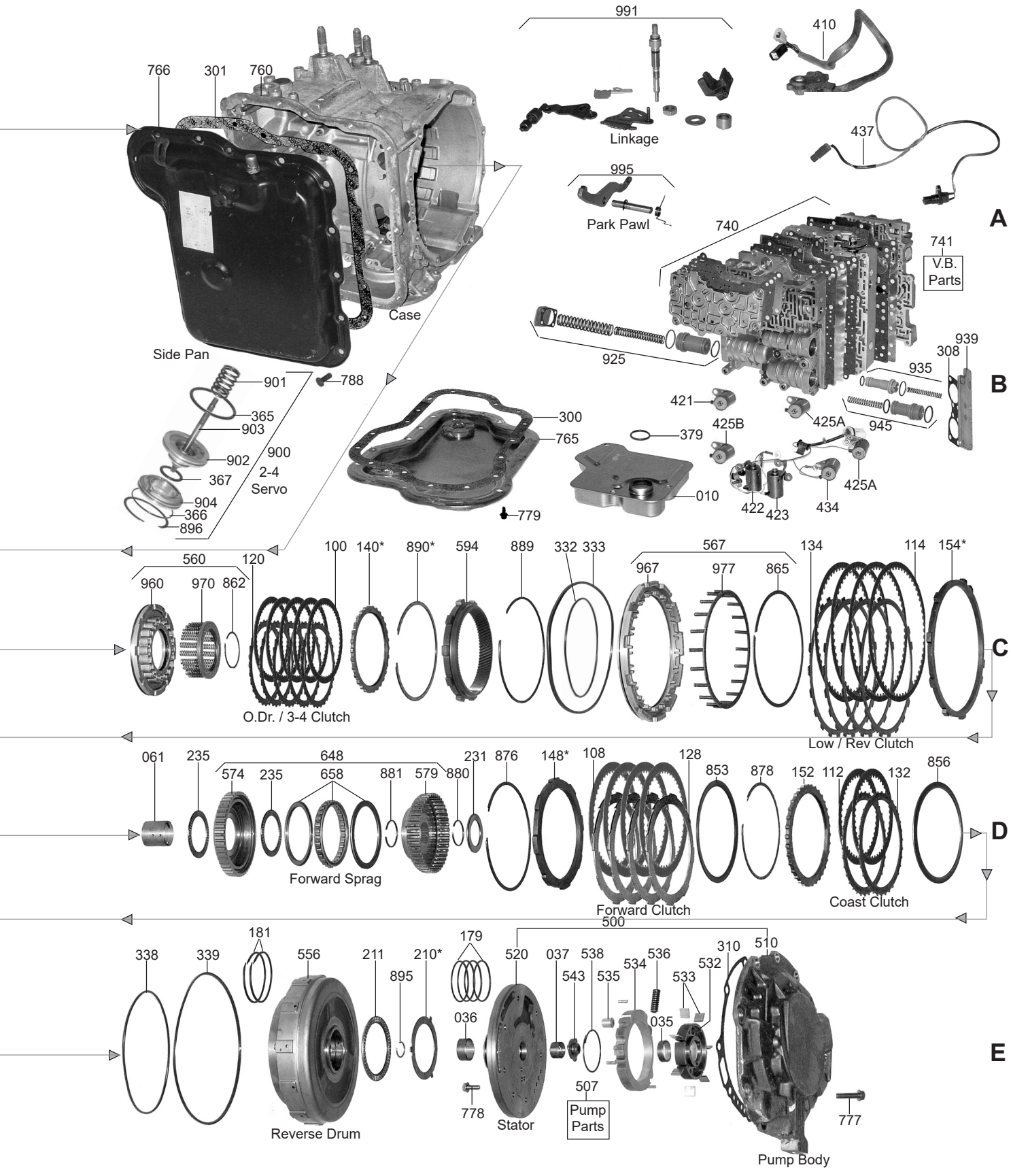

MAZDA

© Whatever It Takes Transmission Parts. Inc.

PART #	PAPER & RUBBER KIT	QTY.	REFERENCE #
28000	Paper & Rubber Kit, G4A-EL / G4A-HL (Mazda / Probe) 1986-92	1	
28000E	Paper & Rubber Kit, G4A-EL / G4A-HL (Mazda / Probe) 1993-Up (Except 2.5L Millenia 12/1993-1997)	1	
28000EA	Paper & Rubber Kit, G4A-EL / G4A-HL (Mazda / Probe) 1993-Up (Fits 626 & MX6 1993 (All) And 1991-2000 With 2.5L) (Millenia 12/1993-2002 With 2.5L) (MPV 2000) (Probe 1993 All) And 1994-97 With 2.5L And 2.0L)	1	

PART #	OVERHAUL KITS	QTY.	REFERENCE #
28002	Overhaul Kit, G4A-EL / G4A-HL (Mazda / Probe) 1986-92	1	
28002E	Overhaul Kit, G4A-EL / G4A-HL (Mazda / Probe) 1993-Up (If Customer Wants Metal Rings Sell 28175E Also)	1	

PART #	MASTER L/STEEL KIT	QTY.	REFERENCE #
28004	Master L/Steels Kit, G4A Mazda / Probe (W/Out Turbo) 1986-87	1	
28004B	Master L/Steels Kit, G4A Mazda / Probe (With & W/Out Turbo) 1988-92	1	
28004E	Master L/Steels Kit, G4A-EL / G4A-HL (Mazda / Probe) 1993-Up (If Customer Wants Metal Rings Sell 28175W Also)	1	

PART #	MASTER W/STEEL KIT	QTY.	REFERENCE #
28006	Master W/Steels Kit, G4A (Mazda / Probe) (W/Out Turbo) 1986-87	1	
28006B	Master W/Steels Kit, G4A (Mazda / Probe) (With & W/Out Turbo) 1988-92	1	
28006E	Master W/Steels Kit, G4A-EL / G4A-HL (Mazda / Probe) 1993-Up (If Customer Wants Metal Rings Sell 28175E Also)	1	

PART #	FILTER	QTY.	REFERENCE #
28010	Filter, G4A (Mazda 626 / MX6 & Probe) (Non Turbo) (4 Bolt, 5/8” Thick) 1986-87	1	FU01-210500E
28010A	Filter, G4A / G4A-EL (Mazda 626 / MX6) (3 Bolt, 1” Thick) 1988-95	1	FU31-21-500
28010B	Filter, G4A (Mazda 323) (3 Bolt, 1 1/2” Thick) 1988-89	1	FU50-21-500A
28010D	Filter, G4A-EL (626 / MX6 / Probe) (3 Bolt)(With 1 5/8” Long Pick-Up Tube) 1993-Up	1	F32Z-7A098-A

PART #	FILTER KIT	QTY.	REFERENCE #
28011	Filter Kit, G4A (Mazda 626 / MX6 & Probe) (Non Turbo) (4 Bolt, 5/8” Thick) 1986-87	1	
28011A	Filter Kit, G4A / G4A-EL (Mazda 626 / MX6) (3 Bolt, 1” Thick) 1988-95	1	
28011B	Filter Kit, G4A (Mazda 323) (3 Bolt, 1 1/2” Thick) 1988-89	1	
28011D	Filter Kit, G4A-EL (Mazda 626 / MX6 & Probe) (3 Bolt, Plastic, With 1 1/2” Long Pick-Up Tube) 1993-Up	1	

PART #	MISC. FILTERS	QTY.	REFERENCE #
28015	Filter, G4A Thimble Filter In Valve Body 1986-92	4	FU01-21-296A
28015A	Filter, G4A-EL Thimble Filter In Valve Body 1993-Up	9	FU19-21-296A

PART #	BANDS	QTY.	REFERENCE #
28026	Band, G4A (Non Turbo) 1 1/2” Wide 1986-Up	1	FU08-21-310A
28026B	Band, G4A (With Turbo) 1 3/4” Wide 1987-Up	1	FU32-21-310B

PART #	BUSHINGS	QTY.	REFERENCE #
28030	Bushing Kit, G4A 1986-Up	1	
28031A	Bushing, G4A Converter Hub (57.1mm) 1988-Up	1	
28031AA	Bushing, G4A Converter Hub (61.1mm) 1986-87	1	
38032A	Bushing, G4A Converter Reactor (Small) To Turbine Shaft (.904”OD)	1	
28032A	Bushing, G4A Converter Reactor (Small) To Turbine Shaft (1.092”OD)	1	
28036	Bushing, G4A Pump Cover (Rear)	1	
28037	Bushing, G4A Pump Cover (Front)	1	
28052	Bushing, G4A Sun Gear 1986-Up	2	
28061	Bushing, G4A Band Drum (Or Sun Gear Shell) (1 3/8” Long) (Non Turbo)	1	
28061B	Bushing, G4A Band Drum (Or Sun Gear Shell) (1 5/8” Long) (Turbo)	1	

© Whatever It Takes Transmission Parts. Inc.

PART #	METAL CLAD SEALS	QTY.	REFERENCE #
28070	Seal, G4A Front 1986-Up (Narrow, With Lip) (3.475"OD)	1	
28070A	Seal, G4A Front (Wide) 1986-Up	1	
42076A	Seal, G4A Axle (Both Sides) (.395" Thick) 1986-Up	2	FU03-27-238
28089A	Retainer, G4A Front Seal (3 Bolt Metal)	1	

PART #	FRICTION CLUTCH	QTY.	REFERENCE #
28100	Friction, G4A 3-4 Clutch (.063") 4.65"OD (50 Teeth) (With Groove) 1986-Up	4-5	FU08-19-370
28100A	Friction, G4A 3-4 Clutch (.063") 4.65"OD (50 Teeth) (Smooth) 1994-Up	4-5	
28108	Friction, G4A Forward Clutch (.063") 5.70"OD (48 Teeth) 1986-Up	3-4	FU08-19-580
28110	Friction, G4A Reverse Clutch (V-Tooth) (.063") 7.70"OD (58 Teeth) 1986-87 (Use 28114)	2-3	FU01-19-460
28110A	Friction, G4A Reverse Clutch (Square Tooth) (.063")7.70"OD (58 Teeth) 1988-Up (Use 28114A)	2-3	FU50-19-4F0
28110B	Friction, G4A Reverse Clutch (Square Tooth) .063" (32 Teeth) 7.720"OD 2001-Up	2-3	
28112	Friction, G4A Coast Clutch (V-Tooth) (.061") 5.150"OD (44 Teeth) 1986-87	2	FU08-19-590
28112A	Friction, G4A Coast Clutch (Square Tooth) (.061") 5.150"OD (44 Teeth) 1988-Up	2	FU50-19-590
28114	Friction, G4A Low/Reverse Clutch (V-Tooth) (.063") 7.70"OD (58 Teeth) 1986-87 (Also Fits Reverse Clutch)	2-7	FU01-19-460
28114A	Friction, G4A Low/Reverse Clutch (Square Tooth) (.063")7.70"OD (58 Teeth) 1988-Up (Also Fits Reverse Clutch)	2-7	FU50-19-4F0
28119	Friction Module, G4A 1986-87	1	
28119A	Friction Module, G4A (Non Turbo) 1988-Up	1	
28119B	Friction Module, G4A (With Turbo) V-6 (3.0L) 1988-Up	1	
28119EA	Friction Module, G4A (Mazda/Ford) 1993-Up	1	
28119G	Friction Module, G4A (Mazda Millenia 2.5L) 1994-Up	1	

PART #	STEEL CLUTCH	QTY.	REFERENCE #
28120	Steel, G4A 3-4 Clutch (.063") 4.0"ID (16 Teeth) 1986-87	5	FU01-19-334
28120A	Steel, G4A 3-4 Clutch (.063") 4.0"ID (30 Teeth) 1988-Up	5	FU50-19-334
28120B	Steel, G4A 3-4 Clutch (.091") 4.0"ID (30 Teeth) 1988-Up	5	FU32-19-334
28120D	Steel, G4A 3-4 Clutch (.130") 4.0"ID (30 Teeth) 1993-UP	4	FU9D-19-334
28128	Steel, G4A Forward Clutch (.063") 4.8"ID (8 Teeth) 1986-92	3-4	FU01-19-571
28128A	Steel, G4A Forward Clutch (.063") 4.8"ID (32 Teeth) 1993-Up	3	FU9A-19-571A
28130	Steel, G4A Reverse Clutch (.063") 7.1"ID (12 Teeth) 1986-92	2	FU50-19-561
28130B	Steel, G4A Reverse Clutch (.063") 7.1"ID (32 Teeth) 1993-Up	2	FU9A-19-561
28132	Steel, G4A Coast Clutch (.063") 4.45"ID (32 Teeth) 1986-Up	2-3	FU01-19-621
28134	Steel, G4A Low/Reverse Clutch (.063") 7.1"ID (15 Teeth) 1986-Up	3-5	FU01-19-451A

PART #	CLUTCH PRESSURE PLATES	QTY.	REFERENCE #
28140	Pressure Plate, G4A 3-4 Clutch (3.8mm) (16 Teeth) 1986-87	1	
28140A	Pressure Plate, G4A 3-4 Clutch (3.8mm) (30 Teeth) 1988-Up	1	E92Z-7B066-AE
28140B	Pressure Plate, G4A 3-4 Clutch (4.0mm) (30 Teeth) 1988-Up	1	E92Z-7B066-T
28140C	Pressure Plate, G4A 3-4 Clutch (4.2mm) (30 Teeth) 1988-Up	1	E92Z-7B066-U
28140D	Pressure Plate, G4A 3-4 Clutch (4.4mm) (30 Teeth) 1988-Up	1	E92Z-7B066-V
28140E	Pressure Plate, G4A 3-4 Clutch (4.6mm) (30 Teeth) 1988-Up	1	E92Z-7B066-W
28140F	Pressure Plate, G4A 3-4 Clutch (4.8mm) (30 Teeth) 1988-Up	1	E92Z-7B066-X
28148	Pressure Plate, G4A Forward Clutch (.206") (8 Teeth) 1986-92 (Has 8 Teeth But Looks Like 16 Teeth)	1	
28148A	Pressure Plate, G4A Forward Clutch (.232") (8 Teeth) 1986-92 (Has 8 Teeth But Looks Like 16 Teeth)	1	E92Z-7B066-A
28148AA	Pressure Plate, G4A Forward Clutch (.240") (8 Teeth) 1986-92 (Has 8 Teeth But Looks Like 16 Teeth)	1	E92Z-7B066-B
28148AB	Pressure Plate, G4A Forward Clutch (.248") (8 Teeth) 1986-92 (Has 8 Teeth But Looks Like 16 Teeth)	1	E92Z-7B066-C
28148AC	Pressure Plate, G4A Forward Clutch (.256") (8 Teeth) 1986-92 (Has 8 Teeth But Looks Like 16 Teeth)	1	E92Z-7B066-D
28148AD	Pressure Plate, G4A Forward Clutch (.264") (8Teeth) 1986-92 (Has 8 Teeth But Looks Like 16 Teeth)	1	E92Z-7B066-E
28148B	Pressure Plate, G4A Forward Clutch (.232") (32 Teeth) 1993-Up	1	
28148BA	Pressure Plate, G4A Forward Clutch (.240") (32 Teeth) 1993-Up	1	
28148BB	Pressure Plate, G4A Forward Clutch (.248") (32 Teeth) 1993-Up	1	
28148BC	Pressure Plate, G4A Forward Clutch (.256") (32 Teeth) 1993-Up	1	
28148BD	Pressure Plate, G4A Forward Clutch (.264") (32 Teeth) 1993-Up	1	

© Whatever It Takes Transmission Parts. Inc.

PART #	CLUTCH PRESSURE PLATES (Continued)	QTY.	REFERENCE #
28150	Pressure Plate, G4A Reverse Clutch (.241") (12 Teeth) 1986-92	1	E92Z-7B066-N
28150A	Pressure Plate, G4A Reverse Clutch (.258") (12 Teeth) 1986-92	1	E9TZ-7B066-N
28150AA	Pressure Plate, G4A Reverse Clutch (.274") (12 Teeth) 1986-92	1	E92Z-7B066-P
28150AB	Pressure Plate, G4A Reverse Clutch (.282") (12 Teeth) 1986-92	1	E92Z-7B066-Q
28150AC	Pressure Plate, G4A Reverse Clutch (.290") (12 Teeth) 1986-92	1	E92Z-7B066-R
28150AD	Pressure Plate, G4A Reverse Clutch (.298") (12 Teeth) 1986-92	1	E92Z-7B066-S
28150AE	Pressure Plate, G4A Reverse Clutch (.306") (12 Teeth) 1986-92	1	E92Z-7B066-T
28150B	Pressure Plate, G4A Reverse Clutch (.258") (32 Teeth) 1993-Up	1	
28150BA	Pressure Plate, G4A Reverse Clutch (.274") (32 Teeth) 1993-Up	1	
28150BB	Pressure Plate, G4A Reverse Clutch (.282") (32 Teeth) 1993-Up	1	
28150BC	Pressure Plate, G4A Reverse Clutch (.290") (32 Teeth) 1993-Up	1	
28150BD	Pressure Plate, G4A Reverse Clutch (.298") (32 Teeth) 1993-Up	1	
28150BE	Pressure Plate, G4A Reverse Clutch (.306") (32 Teeth) 1993-Up	1	
28152	Pressure Plate, G4A Coast Clutch (.181") (32 Teeth) 1986-Up	1	E92Z-7B066-G
28152A	Pressure Plate, G4A Coast Clutch (.189") (32 Teeth) 1986-Up	1	E92Z-7B066-H
28152B	Pressure Plate, G4A Coast Clutch (.197") (32 Teeth) 1986-Up	1	E92Z-7B066-I
28152C	Pressure Plate, G4A Coast Clutch (.205") (32 Teeth) 1986-Up	1	E92Z-7B066-J
28152D	Pressure Plate, G4A Coast Clutch (.213") (32 Teeth) 1986-Up	1	E92Z-7B066-K
28152E	Pressure Plate, G4A Coast Clutch (.220") (32 Teeth) 1986-Up	1	E92Z-7B066-L
28154	Pressure Plate, G4A Low/Reverse Clutch (10.2mm) (15 Teeth) 1986-87	1	E92Z-7B066-Y
28154A	Pressure Plate, G4A Low/Reverse Clutch (10.4mm) (15 Teeth) 1988-Up	1	E92Z-7B066-Z
28154B	Pressure Plate, G4A Low/Reverse Clutch (7.20mm) (15 Teeth) 1988-Up	1	
28154C	Pressure Plate, G4A Low/Reverse Clutch (7.40mm) (15 Teeth) 1988-Up	1	E92Z-7B066-AA
28154D	Pressure Plate, G4A Low/Reverse Clutch (7.60mm) (15 Teeth) 1988-Up	1	E92Z-7B066-AB
28154E	Pressure Plate, G4A Low/Reverse Clutch (7.80mm) (15 Teeth) 1988-Up	1	E92Z-7B066-AC
28154G	Pressure Plate, G4A Low/Reverse Clutch (6.80mm) (15 Teeth) 1988-Up	1	E92Z-7B066-AD

PART #	VALVE BODY KITS	QTY.	REFERENCE #
T28165	Shift Kit, G4A-EL / G4A-HL (1 & 4 Solenoids) 1986-92	1	SK® G4A
T28165E	Shift Kit, G4A-EL / G4EAT (7 Solenoids) 1993-Up	1	SK® GF4A-EL

PART #	OIL SEALING RINGS	QTY.	REFERENCE #
28175C	Ring Kit, G4A (Metal) 1986-Up	1	
28175CT	Ring Kit, G4 (Teflon) 1986-Up	1	
28175E	Ring Kit, G4A (Contains: 4-28179 & 2-28180) (Metal) 1986-Up	1	
28179	Ring, G4A Stator Shaft (Metal) 1986-92	4	
28179T	Ring, G4A Stator Shaft (Teflon) 1986-92	4	
28180	Ring, G4A Output Gear Shaft (Metal) 1986-Up	2	
28180T	Ring, G4A Output Gear Shaft (Teflon) 1986-Up	2	
28191T	Ring, G4A 2-3 Accumulator Piston (Small) (Teflon) 1986-E90	1	
28191AT	Ring, G4A 2-3 Accumulator Piston (Small) (Teflon) L1990-Up	1	
28191TK	Ring Kit, G4A 2-3 Accumulator (Teflon) 1986-E90	1	
28191ATK	Ring Kit, G4A 2-3 Accumulator (Teflon) L1990-Up	1	
28192T	Ring, G4A 2-3 Accumulator Piston (Large) (Teflon) 1986-E90	1	
28192AT	Ring, G4A 2-3 Accumulator Piston (Large) (Teflon) L1990-Up	1	

PART #	WASHERS & BEARINGS	QTY.	REFERENCE #
28210A	Race, G4A Stator To Reverse Drum (1.2mm) (3 Tab) 1986-92	1	E92Z-7D014-A
28210AA	Race, G4A Stator To Reverse Drum (1.4mm) (3 Tab) 1986-92	1	E92Z-7D014-E
28210AB	Race, G4A Stator To Reverse Drum (1.6mm) (3 Tab) 1986-92	1	E92Z-7D014-F
28210AC	Race, G4A Stator To Reverse Drum (1.8mm) (3 Tab) 1986-92	1	E92Z-7D014-B
28210AD	Race, G4A Stator To Reverse Drum (2.0mm) (3 Tab) 1986-92	1	E92Z-7D014-B
28210AE	Race, G4A Stator To Reverse Drum (2.2mm) (3 Tab) 1986-92	1	E92Z-7D014-D
28210B	Race, G4A Stator To Reverse Drum (1.2mm) (1 Tab) 1993-UP	1	E92Z-7D014-D
28210BA	Race, G4A Stator To Reverse Drum (1.4mm) (1 Tab) 1993-UP	1	
28210BB	Race, G4A Stator To Reverse Drum (1.6mm) (1 Tab) 1993-UP	1	
28210BC	Race, G4A Stator To Reverse Drum (1.8mm) (1 Tab) 1993-UP	1	
28210BD	Race, G4A Stator To Reverse Drum (2.0mm) (1 Tab) 1993-UP	1	
28210BD	Race, G4A Stator To Reverse Drum (2.2mm) (1 Tab) 1993-UP	1	
28211	Bearing W/Race, G4A Stator To Reverse Drum 1986-Up	1	
S28212AK	Shim Kit, G4A Stator To Reverse Drum (.015") (5 Per Kit) (Sonnax)	1	71400-15
28213A	Race, G4A Shell To 3-4 Drum Clutch Drum 1986-Up	1	E92Z-7D423-A
28214A	Bearing W/Race, G4A Shell To 3-4 Clutch Drum 1986-Up	1	E92Z-7F404-A
28231	Bearing W/Race, G4A Reverse Drum To Hub 1986-Up	1	E92Z-7D234-A
28235	Bearing, G4A Drum With Sun Gear To Forward Clutch Hub 1986-UP (Also Fits Forward Clutch Hub To Coast Clutch Hub)	2	E92Z-7A623-A

© Whatever It Takes Transmission Parts. Inc.

28244	Bearing, G4A Planet To Sun Gear Drum 1986-Up	1	E92Z-7F241-A
28245	Race, G4A Planet To Sun Gear Drum 1986-Up	1	E92Z-7F868-A
28251	Bearing W/Race, G4A 3-4 Drum To Planet 1986-Up	1	
28252	Race, G4A 3-4 Drum To Planet 1986-Up	1	
32254	Cone Bearing, G4A Differential (Both Sides) 1.378"ID (23 Rollers)	2	
32254K	Bearing & Race Kit, G4A Differential (Both Sides) 1.378"ID (23 Rollers)	2	
28283	Cone Bearing, G4A Idler Gear 1986-Up	2	E92Z-7F453-A
28289AK	Cone Bearing W/Cup Race, G4A Differential (Case Side) 1.575"ID (2.677"OD) (21 Rollers) (When Out Use 28292AK)	1	
28292AK	Cone Bearing W/Cup Race, G4A Differential (Both Sides) 1.575"ID (2.677"OD)(Fits 21 & 22 Rollers)	1-2	

PART #	GASKETS & RUBBER COMPONENTS	QTY.	REFERENCE #
28300	Gasket, G4A Bottom Pan (Non Turbo)	1	
28300A	Gasket, G4A Bottom Pan (With Turbo)	1	
28301	Gasket, G4A Side Pan (Non Turbo)	1	
28301A	Gasket, G4A Side Pan (With Turbo)	1	
28309	Gasket, G4A Pump Bolt Washer	9	E92Z-7N357-A
28310	Gasket, G4A Pump	1	
28320K	Gasket Set, G4A Valve Body (Mazda 323, 626, MX6, & Probe) (Combo) 1986-92	1	
28320AK	Gasket Set, G4A Valve Body 1986-89	1	
28320BK	Gasket Set, G4A Valve Body 1990-92	1	
28379	O-Ring, G4A Filter	1	
28390	External Seal Kit, G4A (With Or W/Out Turbo)	1	

PART #	TECHNICAL MANUALS	QTY.	REFERENCE #
28400	Technical Manual, G4A (Mazda) G4A-EL	1	G4A-EL
28400A	Technical Manual, G4A (Mazda) G4A-HL	1	G4A-HL
28400B	Technical Manual, G4A (G-4EAT / GF4A-EL) (Mazda/Probe)	1	GF4A-EL

PART #	ELECTRICAL COMPONENTS	QTY.	REFERENCE #
28410	Switch, G4A Inhibitor Switch 1987	1	
28410A	Switch, G4A (MX6 / 626) Inhibitor Switch 1988-92	1	
28410B	Switch, G4A (323) Inhibitor Switch 1988-89	1	
28410C	Switch, G4A (Protégé) Inhibitor Switch 1990-92	1	
28410D	Switch, G4A (All) Inhibitor Switch 1993-97	1	
28417	Switch, G4A Pulse Generator	1	
28418A	Solenoid, G4A Pulse 1993-Up	1	
28420A	Solenoid Assembly, G4A (With 4 Solenoids) 1986-93	1	
28420C	Solenoid Assembly, G4A (Contains: 1-2 Shift, 2-3 Shift, 3-4 Shift, Lock-Up, EPC, Lock-Up Control & 3-2 Downshift) (7 Solenoids)	1	
28420CA	Solenoid Assembly, G4A (With 7 Solenoids) 1993-Up	1	
28421A	Solenoid, G4A 1-2 Shift	1	FU9A-21-1F1D
28422A	Solenoid, G4A 2-3 Shift	1	FU9A-21-1F4D
28423A	Solenoid, G4A 3-4 Shift	1	FU9A-21-1F3D
28425	Solenoid, G4A Lock-Up (With Wire Harness) 1986-93	1	FU9A-21-1G1C
28425A	Solenoid, G4A Lock-Up & EPC 1993-Up	2	FU9A-21-1G1B
28425B	Solenoid, G4A Lock-Up Control 1993-Up	1	FU9A-21-1F2C
28434A	Solenoid, G4A 3-2 Down Shift	1	FU9A-21-1F5D
28436A	Sensor, G4A Vehicle Speed	1	
28437A	Sensor, G4A Temperature (Screw-In)	1	
28437B	Sensor, G4A Temperature (Push-In)	1	
28446E	Wire Harness, G4A / G-4EAT Electronic (Fits 7 Solenoid Valve Body)	1	

PART #	MISC. COMPONENTS	QTY.	REFERENCE #
28475	Teflon Sleeve, G4A Slides On Turbine Shaft	1	

PART #	HARD PARTS	QTY.	REFERENCE #
28500	Pump, G4A (Uses 28510A & 28520) 1986-87	1	
28500AA	Pump, G4A (Uses 28510AA & 28520) 1988-92	1	
28500B	Pump, G4A (Uses 28510B & 28520) 1988-92	1	
28500C	Pump, G4A (Uses 28510C & 28520C) 1993-Up	1	

© Whatever It Takes Transmission Parts. Inc.

PART #	PUMP COMPONENTS	QTY.	REFERENCE #
S28507LK	Pressure Regulator Spool Valve, G4A Spring & Expander Ring (Sonnax)	1	
28531AK	Rotor Block Kit, G4A Blocks Outer Side For More Pressure	1	
S28538A	Pump Vane Expander Ring, G4A Decreases Internal Leakage (Sonnax)	1	71912-02

PART #	HARD PARTS (Continued)	QTY.	REFERENCE #
28510A	Pump Body, G4A (Rotor Type) 1986-87 (.235" Shoulder) (1.700" Thick To Gasket Surface)	1	
28510AA	Pump Body, G4A (Rotor Type) 1988-92 (.235" Shoulder) (1.500" Thick To Gasket Surface)	1	
28510B	Pump Body, G4A (Rotor Type) 1988-92 (.352" Shoulder) (1.450" Thick To Gasket Surface)	1	
28510C	Pump Body, G4A (Gear Type) 1993-Up	1	
28520	Stator, G4A (Rotor Type) (7 1/4"OD) 1986-92	1	
28520C	Stator, G4A (Gear Type) (6 1/4"OD) 1993-Up	1	
28529	Converter Reactor, G4A (31 Splines) (With The Reactor Sitting On Splines & The 2 Bolt Holes That Are Closest Together At 6:00, The 2 Holes At 12:00 Are 1 3/8" Center To Center) 1988-Up	1	
28529A	Converter Reactor, G4A (31 Splines) (With The Reactor Sitting On Splines & The 2 Bolt Holes That Are Closest Together At 6:00, The 2 Holes At 12:00 Are 1 3/4" Center To Center) 1988-Up	1	
28529B	Converter Reactor, G4A (35 Splines) (With The Reactor Sitting On Splines & The 2 Bolt Holes That Are Closest Together At 6:00, The 2 Holes At 12:00 Are 1 3/8" Center To Center) 1986-87	1	
28529C	Converter Reactor, G4A (35 Splines) (With The Reactor Sitting On Splines & The 2 Bolt Holes That Are Closest Together At 6:00, The 2 Holes At 12:00 Are 1 3/4" Center To Center) 1988-Up	1	
28529D	Converter Reactor, G4A (31 Splines) (With The Reactor Sitting On Splines & The 2 Bolt Holes That Are Closest Together At 6:00, The 2 Holes At 12:00 Are 1 7/8" Center To Center) 1988-Up	1	
28550A	Drum, G4A 3-4 Clutch (16 Teeth Steels)	1	
28550B	Drum, G4A 3-4 Clutch (30 Teeth Steels) 1.660" Overall Height (Inside Neck For Inner Piston Seal Is 2 1/2"OD)	1	
28550BA	Drum, G4A 3-4 Clutch (30 Teeth Steels) 1.515" Overall Height (Inside Neck For Inner Piston Seal Is 2 1/16"OD)	1	
28550BB	Drum, G4A 3-4 Clutch (30 Teeth Steels) 1.655" Overall Height (Inside Neck For Inner Piston Seal is 2 1/16"OD)	1	
T-71828-TL	Test Tool, G4A 3-4 Drum Air Check (Sonnax)		
28556A	Drum, G4A Reverse (22 Splines) (Uses # 893 & 891 Snap Rings) 1986-87	1	
28556B	Drum, G4A Reverse (22 Splines) (Uses Only # 892 Snap Ring) 1988-92	1	
28556C	Drum, G4A Reverse (20 Splines) 12 Lug Reverse & 32 Lug Forward Steels 1988-92 (Has 3 Forward Clutches)	1	
28556D	Drum, G4A Reverse (20 Splines) 32 Lug Reverse & 32 Lug Forward Steels 1993-Up (Has 4 Forward Clutches)	1	
28556E	Drum, G4A Reverse (20 Splines) 12 Lug Reverse & 8 Lug Forward Steels 1988-92 (Has 3 Forward Clutches) (Forward Housing On The Outside Is 2.560" Tall)	1	
28556EA	Drum, G4A Reverse (20 Splines) 12 Lug Reverse & 8 Lug Forward Steels 1988-92 (Has 4 Forward Clutches) (Forward Housing On The Outside Is 2.640" Tall)	1	
28556EK	Drum Kit, G4A Reverse 1988-92 (Contains: 28556E & 28854 Repair Plate With Lugs) (This Is A Fix For When # 854 Plate Wears Into The Drum)	1	
28558	Drum, G4A Band (2 Clutch) Uses 1 1/2" Wide Band (Pointed Teeth Friction # 28114 With 58 Teeth)	1	
28558A	Drum, G4A Band (2 Clutch) Uses 1 1/2" Wide Band (Square Teeth Friction # 28114A With 58 Teeth)	1	E92Z-7A626-A
28558AA	Drum, G4A Band (3 Clutch) Uses 1 1/2" Wide Band (Square Teeth Friction # 28114A With 58 Teeth)	1	
28558AB	Drum, G4A Band (Uses 1 1/2" Wide Band)(Uses Square Teeth Friction # 28110B With 32 Teeth)	1	
28558B	Drum, G4A Band (2 Clutch) Uses 1 3/4" Wide Band (Square Teeth Friction # 28114A With 58 Teeth)	1	
28558C	Drum, G4A Band (3 Clutch) Uses 1 3/4" Wide Band (Square Teeth Friction # 28114A With 58 Teeth)	1	F92Z-7A626-A
28559	Drum, G4A Coast Clutch (16 Lugs On Outside)	1	
28559B	Drum, G4A Coast Clutch (32 Lugs On Outside)	1	
28560	Piston Kit, G4A 3-4 Clutch (2.070"ID) (With 20 Springs)	1	
28560B	Piston Kit, G4A 3-4 Clutch (2.550"ID) (With 1 Large Spring)	1	
28566	Piston Kit, G4A Reverse Clutch (Piston Is .555" Thick)	1	
28566A	Piston Kit, G4A Reverse Clutch (Piston Is .660" Thick)	1	
28567	Piston Kit, G4A Low/Reverse Clutch (.611" Thick)	1	
28567A	Piston Kit, G4A Low/Reverse Clutch (.520" Thick)	1	
28569	Piston Kit, G4A Coast Clutch	1	

© Whatever It Takes Transmission Parts. Inc.

28574	Clutch Hub, G4A Forward Clutch (Less Sprag) (3 Clutch) (.570" Thick)	1	
28574A	Clutch Hub, G4A Forward Clutch (Less Sprag) (4 Clutch) (.708" Thick)	1	
28577	Clutch Hub, G4A Low Clutch With Inner Race (39 Teeth) (Uses Pointed Teeth Low/Reverse Friction)	1	
28577A	Clutch Hub, G4A Low Clutch With Inner Race (10 Inner Teeth)	1	
28577B	Clutch Hub, G4A Low Clutch With Inner Race (39 Inner Teeth) (Uses Square Teeth Low/Reverse Friction)	1	
28579	Clutch Hub, G4A Coast Clutch (Steel) (Uses Square Teeth Frictions) 1988-Up	1	E92Z-7A360-A
28579A	Clutch Hub, G4A Coast Clutch (Cast Iron) (Uses Pointed Teeth Frictions) 1986-87	1	
28584	Planet, G4A (39 Teeth On Flange)	1	
28584B	Planet, G4A (10 Teeth On Flange)	1	
28594	Ring Gear, G4A Planet (10 Lug)	1	
28594A	Ring Gear, G4A Planet (18 Lug)	1	
28614	Sun Gear, G4A (3 5/16" Long)	1	
28614B	Sun Gear, G4A (3 1/16" Long)	1	
28626	Shell, G4A With Park Gear (2.580" Overall Height) (Has 10 Lugs Where The Planet Ring Gear Sets)	1	
28626B	Shell, G4A With Park Gear (2.527" Overall Height) (Has 10 Lugs Where The Planet Ring Gear Sets)	1	
28626C	Shell, G4A With Park Gear (2.715" Overall Height) (Takes A 3 Tab Washer On The Inside) (Has 10 Lugs Where The Planet Ring Gear Sets) (From The Planet Lugs To Park Lugs Is 1 3/4")	1	
28626CA	Shell, G4A With Park Gear (2.715" Overall Height) (Takes A 3 Tab Washer On The Inside) (Has 10 Lugs Where The Planet Ring Gear Sets) (From The Planet Lugs To Park Lugs Is 1 5/8")	1	
28626D	Shell, G4A With Park Gear (2.715" Overall Height) (Takes A Bearing W/Races (1 Piece Bearing) (Has 10 Lugs Where The Planet Ring Gear Sets)	1	
28626E	Shell, G4A With Park Gear (Has 18 Lugs Where The Planet Ring Gear Sets)	1	

PART #	SPRAGS & ONE WAY CLUTCHES	QTY.	REFERENCE #
28642	Sprag Assembly, G4A With Outer Race (Low/Reverse) 7 Outer Lugs (.520" Thick) (18 Rollers) 1988-Up	1	
28642A	Sprag Assembly, G4A With Outer Race (Low/Reverse) 7 Outer Lugs (.550" Thick) (18 Rollers) 1988-Up	1	
28642AA	Sprag Assembly, G4A With Outer Race (Low/Reverse) 7 Outer Lugs (.520" Thick) (24 Lug Sprag) 1988-Up	1	
28642B	Sprag Assembly, G4A With Outer Race (Low/Reverse) 9 Outer Lugs (The Area Between Outer 9 Lugs Is Raised Almost As High As Lug)	1	
28642BA	Sprag Assembly, G4A With Outer Race (Low/Reverse) 9 Outer Lugs (The Area Between Outer 9 Lugs Is Countersunk) 1986-87	1	
28658	Sprag, G4A Forward	1	E92Z-7A089-A

PART #	HARD PARTS (Continued)	QTY.	REFERENCE #
28671	Pump Drive Shaft, G4A (14 5/16" Long)	1	
28671A	Pump Drive Shaft, G4A (14 3/4" Long)	1	
28671AA	Pump Drive Shaft, G4A (14 7/16" Long) (With 2 Grooves On Splines)	1	
28673A	Turbine Shaft, G4A (13" Long) (20 Converter Splines) 1988-92	1	
28673AA	Turbine Shaft, G4A (12 15/16" Long) (21 Converter Splines) (No Groove) 1988-92	1	
28673B	Turbine Shaft, G4A (12 3/4" Long) (21 Converter Splines) 1988-92	1	
28673C	Turbine Shaft, G4A (13 3/8" Long) (21 Converter Splines) 1988-92	1	
28673D	Turbine Shaft, G4A (13" Long) (25 Converter Splines) 1986-87	1	
28673E	Turbine Shaft, G4A (13 1/16" Long) (21 Converter Splines) (With 2 Grooves) 1993-Up	1	
28679	Shaft, G4A Idler Gear	1	
28680	Governor, G4A (15 Teeth Gear) 1988-89	1	
28686	Cover, G4A Governor 1988-89	1	
28687	Clip, G4A Governor Cover 1988-89	1	
28714AK	Idler Gear, G4A With Bearings (39 Teeth) No Groove (1 3/8" Thick)	1	
28714AAK	Idler Gear, G4A With Bearings (39 Teeth) 3 Groove (1 1/8" Thick)	1	
28714BK	Idler Gear, G4A With Bearings (41 Teeth) No Groove (1 3/8" Thick)	1	
28714BBK	Idler Gear, G4A With Bearings (41 Teeth) 1 Groove (1 1/8" Thick)	1	
28714CK	Idler Gear, G4A With Bearings (41 Teeth) 4 Groove (1 7/16" Thick)	1	
28714CAK	Idler Gear, G4A With Bearings (41 Teeth) 2 Groove	1	
28714DK	Idler Gear, G4A With Bearings (40 Teeth) 5 Groove (4x4)	1	
28714DAK	Idler Gear, G4A With Bearings (40 Teeth) 3 Groove	1	
28714FK	Idler Gear, G4A With Bearings (42 Teeth) 4 Groove (1 3/8" Thick)	1	
28714LK	Idler Gear, G4A With Bearings (37 Teeth) 1 Wide Groove (1 3/8" Thick)	1	

© Whatever It Takes Transmission Parts. Inc.

PART #	HARD PARTS (Continued)	QTY.	REFERENCE #
28715A	Differential, G4A With Ring Gear (74 Teeth) 1.100”OD Axle (26 Splines)	1	
28715B	Differential, G4A With Ring Gear (74 Teeth) 2 Groove (1.180”OD Axle) (28 Splines)	1	F0YZ-4026A
28715BA	Differential, G4A With Ring Gear (74 Teeth) No Groove (1.180”OD Axle) (28 Splines)	1	
28715C	Differential, G4A With Ring Gear (79 Teeth) 4 Groove (1.175”OD Axle) (28 Splines)	1	
28715CA	Differential, G4A With Ring Gear (79 Teeth) No Groove (1.185”OD Axle) (28 Splines)	1	
28715D	Differential, G4A With 1.300” Ring Gear (72 Teeth) 2 Groove (28 Splines) (Ring Gear Is Bolted On)	1	
28715DA	Differential, G4A With .960” Ring Gear (73 Teeth) 3 Groove (28 Splines) (Ring Gear Is Bolted On)	1	
28715E	Differential, G4A With .948” Ring Gear (73 Teeth) 3 Groove (23 Splines) (Ring Gear Is Rivited On)	1	
28715G	Differential, G4A With Bolt On Ring Gear (71 Teeth) 1 Groove	1	
28715H	Differential, G4A With Ring Gear (70 Teeth) 1 Wide Groove	1	
28715L	Differential, G4A (70 Teeth)(3 Groove)	1	
28730A	Pinion, G4A (Output Gear) With Bearings (20 Teeth) No Groove	1	
28730B	Pinion, G4A (Output Gear) With Bearings (20 Teeth) 4 Groove	1	
28730C	Pinion, G4A (Output Gear) With Bearings (20 Teeth) 3 Groove	1	
28730CA	Pinion, G4A (Output Gear) With Bearings (20 Teeth) 2 Groove	1	
28730D	Pinion, G4A (Output Gear) With Bearings (19 Teeth) 5 Groove (4x4)	1	
28730E	Pinion, G4A (Output Gear) With Bearings (19 Teeth) 3 Groove	1	
28730G	Pinion, G4A (Output Gear) With Bearings (19 Teeth) 4 Groove	1	
28730H	Pinion, G4A (Output Gear) With Bearings (19 Teeth) 38 Splines	1	
28730L	Pinion, G4A (Output Gear) With Bearings (16 Teeth) 1 Groove	1	
28735	Cover, G4A Idler Gear (Cast # 50)	1	
28735A	Cover, G4A Idler Gear (Cast # 31)	1	
28735B	Cover, G4A Idler Gear (Cast # 32)	1	
28735C	Cover, G4A Idler Gear With Valve	1	
28735D	Cover, G4A Idler Gear (Cast # 1H or 2H)	1	
28735E	Cover, G4A Idler Gear (1 11/16” Overall Thickness)	1	
28735L	Cover, G4A Idler Gear (Cast # GF30)	1	
28740	Valve Body, G4A (2 Solenoids)	1	
28740A	Valve Body, G4A (4 Solenoids With 4 Wire Case Connectors) Non Turbo (5 1/8” Manual Valve)	1	
28740AA	Valve Body, G4A (4 Solenoids With 4 Wire Case Connectors) With Turbo (5 3/8” Manual Valve)	1	
28740B	Valve Body, G4A (4 Solenoids With 6 Wire Case Connectors) Non Turbo (Has 1 Bolt Holding The 1-2 Shift Solenoid On)	1	
28740BA	Valve Body, G4A (4 Solenoids With 6 Wire Case Connectors) With Turbo (5 3/8” Manual Valve)	1	
28740BB	Valve Body, G4A (4 Solenoids With 6 Wire Case Connectors) Non Turbo (Has 4 Bolts Holding The 1-2 Shift Solenoid On)	1	
28740C	Valve Body, G4A (1 Solenoid)	1	
28740D	Valve Body, G4A (7 Solenoids) (Uses A Screw In Temperature Sensor)	1	
28740DA	Valve Body, G4A (7 Solenoids) (Uses A Push In Temperature Sensor)	1	
28740DB	Valve Body, G4A (6 Solenoids)(Uses A Screw In Temperature Sensor)	1	
28740DC	Valve Body, G4A (6 Solenoids)(Uses A Push In Temperature Sensor)	1	
28740E	Valve Body, G4A (5 Solenoids) 1993-Up	1	

PART #	VALVE BODY COMPONENTS	QTY.	REFERENCE #
S28741BK	Boost Valve Kit, G4A Reverse (Valve ,Sleeve & End Plug) (Sonnax)(For Units With TV Cables)	1	71846-01K
S38741BAK	Boost Valve Kit, G4A Reverse (Valve, Sleeve & End Plug) (Sonnax)(For Units With Electronic Transmissions)	1	74846-01K
28741B	Valve Body Cam Wheel, G4A	1	FU01-21369A
28925B	Accumulator Assembly, G4A Piston Update Kit 1986-89	1	

PART #	HARD PARTS (Continued)	QTY.	REFERENCE #
28750A	Bell Housing, G4A (Top Bolts 6 1/4” Center To Center) (With 2 O-rings On 2-3 Accumulator) (14 Bolt Holes To Case) (No Governor)	1	
28750C	Bell Housing, G4A (Top Bolts 6 1/4” Center To Center) (With 4 O-rings On 2-3 Accumulator) (14 Bolt Holes To Case) (Governor Type)	1	
28750CA	Bell Housing, G4A (Top Bolts 6 1/4” Center To Center) (With 3 O-Rings On 2-3 Accumulator)	1	
28750D	Bell Housing, G4A (Top Bolts 5 1/8” Center To Center) (With 1.00”OD 2-3 Accumulator) (16 Bolt Holes To Case)	1	
28750E	Bell Housing, G4A (Top Bolts 5 1/8” Center To Center) (With 1.170”OD 2-3 Accumulator) (16 Bolt Holes To Case)	1	
28750EA	Bell Housing, G4A (Top Bolts 5 1/8” Center To Center) (With 3 O-Rings On 2-3 Accumulator) (14 Bolt Holes To Case)	1	

MAZDA

© Whatever It Takes Transmission Parts. Inc.

28750EB	Bell Housing, G4A (Top Bolts 5 1/8” Center To Center) (2-3 Accumulator Is Built In The Idler Gear Cover) (14 Bolt Holes To Case)	1	
28750F	Bell Housing, G4A (Top Bolts 6 1/4” Center To Center) (With 2 O-rings On 2-3 Accumulator) (15 Bolt Holes To Case)	1	
28750G	Bell Housing, G4A (Top Bolts 6 1/4” Center To Center) 4x4	1	
28750H	Bell Housing, G4A (Top Bolts 6 1/4” Center To Center) Cast # FU50	1	
28750J	Bell Housing, G4A (Top Bolts 2 1/16” Center To Center) Cast # FU9B (With 2 O-rings On 2-3 Accumulator)	1	
28750JA	Bell Housing, G4A (Top Bolts 2 1/16” Center To Center) Cast # FU2B (Starter At 11:00)	1	
28750JB	Bell Housing, G4A (Top Bolts 2 1/16” Center To Center) Cast # FU2B (Starter At 2:00)	1	
28750L	Bell Housing, G4A (Top Bolts 4 3/4” Center To Center) Cast # FU80	1	
28750LA	Bell Housing, G4A (Top Bolts 3 1/4” Center To Center)(Starter At 11:00)(16 Bolt Holes To Case)	1	
28750M	Bell Housing, G4A (Top Bolts 6 1/2” Center To Center) Cast # FU9A	1	
28760	Case, G4A (14 Bolts To Bell) 3 Bolt Filter (Governor Type)	1	
28760A	Case, G4A (14 Bolts To Bell) 4 Bolt Filter (Governor Type)	1	
28760AA	Case, G4A (14 Bolts To Bell) 3 Bolt Filter (Electronic Type)	1	
28760AB	Case, G4A (14 Bolts To Bell) 4 Bolt Filter (Electronic Type)	1	
28760B	Case, G4A (16 Bolts To Bell) 3 Bolt Filter (Cable Operated) With 1.00”OD 2-3 Accumulator Piston (8” From Bell To Pump) Cast # TL	1	
28760BA	Case, G4A (16 Bolts To Bell) 3 Bolt Filter (Cable Operated) With 1.00”OD 2-3 Accumulator Piston (8” From Bell To Pump) Cast # FU9A	1	
28760C	Case, G4A (16 Bolts To Bell) 3 Bolt Filter (Cable Operated) With 1.70”OD 2-3 Accumulator Piston (8” From Bell To Pump) Cast # FU9B	1	
28760CA	Case, G4A (16 Bolts To Bell) 3 Bolt Filter (Cable Operated) With 1.70”OD 2-3 Accumulator Piston (8” From Bell To Pump)	1	
28760CB	Case, G4A (16 Bolts To Bell) 3 Bolt Filter (Cable Operated) With 1.70”OD 2-3 Accumulator Piston (8 3/8” From Bell To Pump) Cast # FU32	1	
28760D	Case, G4A (4x4)	1	
28760L	Case, G4A (16 Bolts To Bell) 3 Bolt Filter (No Cable)(With 1.090”OD 2-3 Accumulator Piston) (8 1/8” Bell To Pump)(Cast # GF32)	1	
28765	Pan, G4A Bottom (Non Turbo) (7/8” Deep)	1	
28765A	Pan, G4A Bottom (With Turbo)	1	
28765B	Pan, G4A Bottom (Non Turbo) (1/2” Deep)	1	
28765C	Pan, G4A Bottom (Non Turbo) (2 1/4” Deep)	1	
28766	Pan, G4A Side (Valve Body Cover) No Vent	1	
28766A	Pan, G4A Side (Valve Body Cover) With Vent With Metal Cap	1	
28766B	Pan, G4A Side (Valve Body Cover) With Vent With Hose	1	
28774	Speed-O Housing, G4A (Aluminum Housing, 1 Bolt Cable Type) (20 Teeth Gear)	1	
28776K	Bolt Set, G4A Holds Bell Housing To Case (16 Pieces)	1	
28777K	Bolt Set, G4A Holds Pump To Case (10 Pieces)	1	
28778K	Bolt Set, G4A Holds Stator To Body (6 Pieces)	1	
28779K	Bolt Set, G4A Holds Bottom Pan To Case (17 Pieces)	1	
28780K	Bolt Set, G4A Holds Converter Reactor To Bell (8 Pieces)	1	
28782K	Bolt Set, G4A Holds Valve Body To Case (8 Pieces)	1	
28787K	Bolt Set, G4A Holds Idler Cover To Bell (9 Pieces)	1	
28788K	Bolt Set, G4A Holds Side Pan To Case (17 Pieces)	1	
28792K	Bolt Set, G4A holds 2-3 Accumulator To Bell (2 Pieces)	1	
28799	Nut, G4A Idler Gear	1	
28847A	Gear, G4A Speed-O Drive (25 Teeth) (On Differential)	1	3787240
28848AK	Gear & Housing, G4A Speed-O Driven (20 Teeth)	1	
28853	Cushion, G4A Forward Clutch (5 3/4”OD) No Teeth 1986-92	1	E92Z-17285-A
28854	Spacer, G4A Reverse Clutch Spring To Snap Ring 1986-92	1	E92Z-7G400-A
28855	Spring Stop, G4A Reverse Clutch Return Spring	1	
28856	Cushion, G4A Coast Clutch	1	
28857	Wave Ring, G4A Between Sprag And # 870 Snap Ring	1	
28862	Snap Ring, G4A Holds Retainer To 3-4 Drum	1	
28865	Snap Ring, G4A Holds Retainer For Low/Reverse Clutch	1	
28870	Snap Ring, G4A Holds One Way Clutch Outer Race To Case	1	
28876	Snap Ring, G4A Holds Forward Clutch Top Pressure Plate In Drum	1	E92Z-70483-B
28878	Snap Ring, G4A Holds Coast Clutch Top Pressure Plate In Drum	1	E92Z-7D483-C
28879	Snap Ring, G4A Holds Retainer To Coast Clutch Drum	1	
28880	Snap Ring, G4A Sun Gear To Inner Race (Rear)	1	
28881	Snap Ring, G4A Sun Gear To Inner Race (Front)	1	
28882	Snap Ring, G4A Holds Planet To Low/Reverse Hub	1	
28885	Snap Ring, G4A Holds Top Pressure Plate In Low & Reverse Clutch	1	E92Z-7D483-C
28889	Snap Ring, G4A Holds Ring Gear In 3-4 Drum	1	E32Z-7D483-D

© Whatever It Takes Transmission Parts. Inc.

PART #	HARD PARTS (Continued)	QTY.	REFERENCE #
28890	Snap Ring, G4A Holds Top Pressure Plate In 3-4 Drum 1986-92	1	
28890B	Snap Ring, G4A Holds Top Pressure Plate In 3-4 Drum (.150") 1993-95	1	
28890BA	Snap Ring, G4A Holds Top Pressure Plate In 3-4 Drum (.157") 1993-95	1	
28890BB	Snap Ring, G4A Holds Top Pressure Plate In 3-4 Drum (.165") 1993-95	1	
28890BC	Snap Ring, G4A Holds Top Pressure Plate In 3-4 Drum (.173") 1993-95	1	
28890BD	Snap Ring, G4A Holds Top Pressure Plate In 3-4 Drum (.181") 1993-95	1	
28890BE	Snap Ring, G4A Holds Top Pressure Plate In 3-4 Drum (.189") 1993-95	1	
28990C	Snap Ring, G4A Holds Top Pressure Plate In 3-4 Drum (.060") 1996-Up	1	
28891	Snap Ring, G4A Holds Top Steel To reverse Drum	1	
28892	Snap Ring, G4A Holds Top Pressure Plate To Reverse Drum	1	
28893	Snap Ring, G4A Holds Reverse Clutch Piston Retainer	1	
28895	Snap Ring, G4A Holds Reverse Drum To Turbine Shaft (.040")	1	E92Z-7G287-A
28896	Snap Ring, G4A Holds Servo Cover To Case	1	
28900	Servo Assembly, G4A (1.567"OD Small End Of Piston)	1	
28900A	Servo Assembly, G4A (1.875"OD Small End Of Piston)	1	
28900B	Servo Assembly, G4A (1.925"OD Small End Of Piston)	1	
28900C	Servo Assembly, G4A (2.315"OD Small End Of Piston Stepped Down To 1.00"OD)	1	
28900D	Servo Assembly, G4A (2.315"OD Small End Of Piston With No Step)	1	
28900E	Servo Assembly, G4A (1.410"OD Small End Of Piston)	1	
28901	Spring, G4A Servo (3 Per Pack) (TTK)	1	
28901A	Spring, G4A Servo (3 Per Pack) Corrects 2-3 Flare Up & 1-2 Or 3-4 Slide Or Run Away (TTK)	1	
28901AB	Spring, G4A Servo (3 Per Pack) Helps Rough 1-2 & 3-4 Upshift (TTK)	1	
28904	Cover, G4A Servo	1	
28915	Band Strut Set, G4A With Pin	1	
28930	Accumulator Assembly, G4A 2-3 (1.00"OD Piston) (2 O-Ring Type)	1	
28930A	Accumulator Assembly, G4A 2-3 (1.70"OD Piston) (2 O-Ring Type)	1	
28930B	Accumulator Assembly, G4A 2-3 (3 O-Ring Type)	1	
28930L	Accumulator Assembly, G4A 2-3 (1.090"OD Piston)(2 O-Ring Type)	1	
28960	Piston, G4A 3-4 Clutch	1	
28966	Piston, G4A Reverse Clutch (.555" Thick) 1993-Up	1	E32Z-7D042-A
28966A	Piston, G4A Reverse Clutch (.605" Thick) (Uses 20 Coil Springs)	1	
28966B	Piston, G4A Reverse Clutch (.645" Thick) 1988-92	1	E92Z-7402A
28967	Piston, G4A Low/Reverse Clutch (.605" Thick) (Uses 20 Coil Springs)	1	
28969	Piston, G4A Coast Clutch	1	
28970	Retainer W/Spring, G4A 3-4 Clutch	1	
28976	Spring, G4A Reverse Clutch Return (Beveled) (.030" Thick) 1986-87	1	E92Z-7E085E
28976A	Spring, G4A Reverse Clutch Return (Beveled) (.060" Thick) 1988-Up	1	E92Z-7E085E
28977	Retainer W/Spring, G4A Low/Reverse Clutch	1	E92Z-7F299-A
28979	Retainer W/Spring, G4A Coast Clutch	1	E92Z-7F222-A
28991	Linkage, G4A Internal	1	
28999	Switch Box With Oil Hoses, G4A	1	

© Whatever It Takes Transmission Parts. Inc.

Technical Bulletin #350

Transmission: *G4A-EL*
Subject: *3-4 Shift hunt*
Application: *Ford, Mazda*
Issue Date: *August, 2003*

G4A-EL

3-4 Shift Hunt

This condition may be caused by failure in the 3-4 shift solenoid hydraulic circuit. Monitor the shift solenoid signals from the computer. If the 1-2 shift solenoid is the only solenoid being cycled on and off during the 3-4 shift hunt, the 3-4 shift solenoid feed circuit has failed.

This condition is commonly caused by debris which has plugged the 3-4 shift solenoid feed orifice.

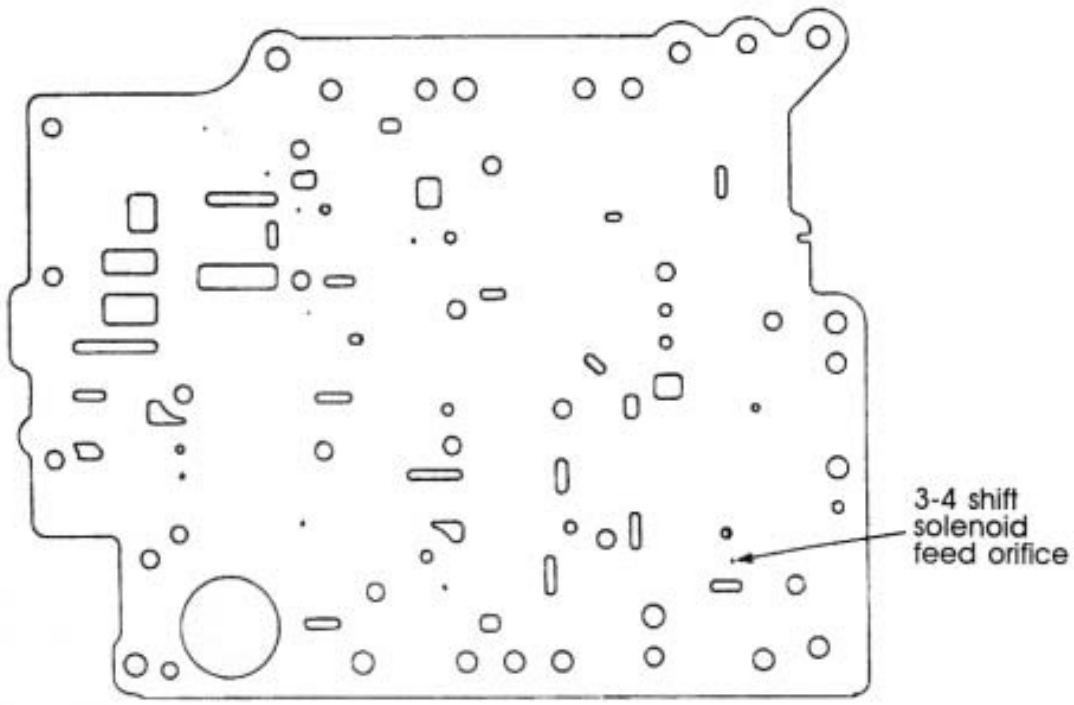

NOTE: This condition may also be caused by a leak in the 3-4 shift solenoid or the end plug of the 3-4 shift valve.

MAZDA

Copyright © 2003 ATRA. All Rights Reserved.

© Whatever It Takes Transmission Parts. Inc.

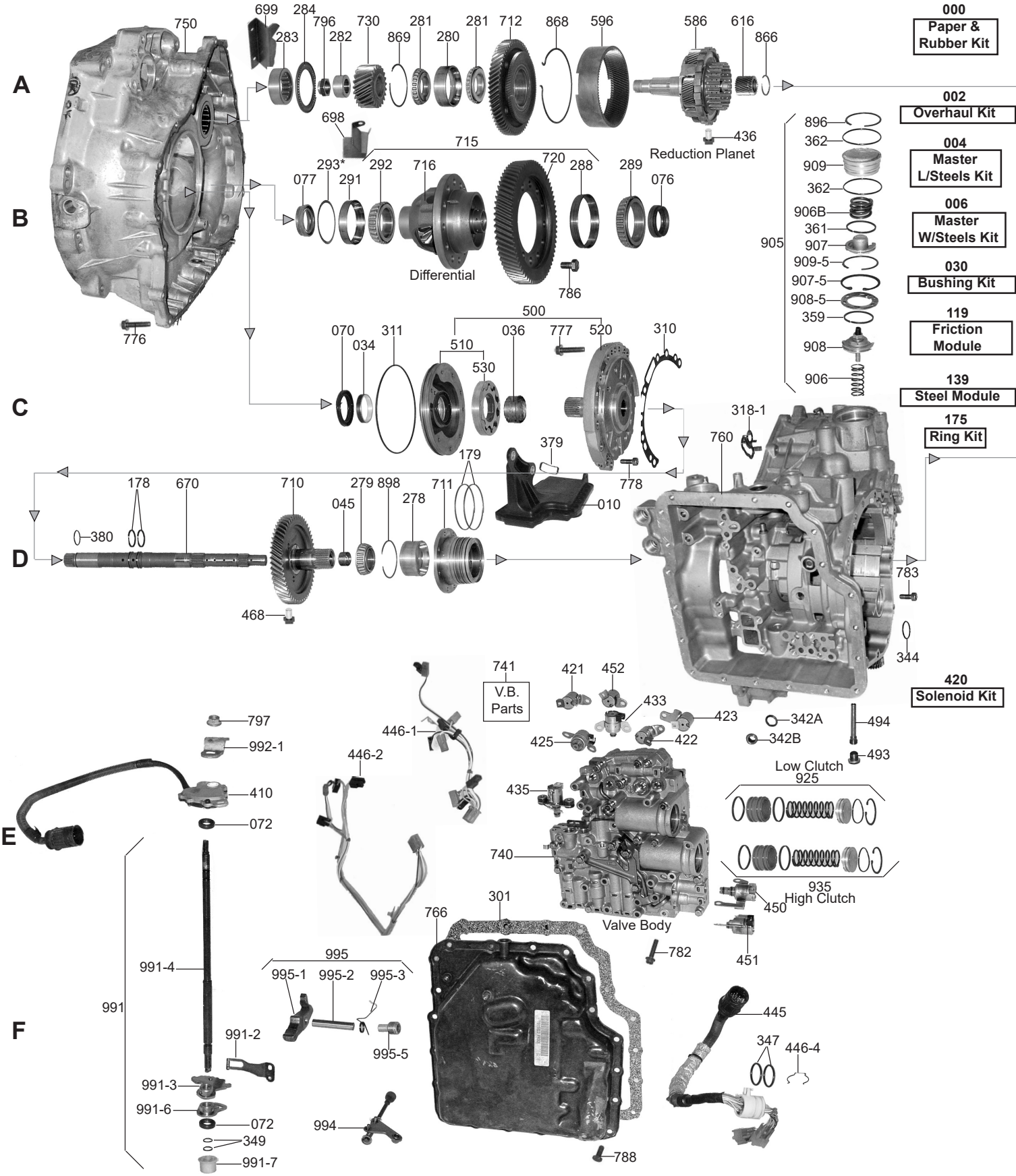

© Whatever It Takes Transmission Parts. Inc.

JF506E (JA5A-EL / 09A)

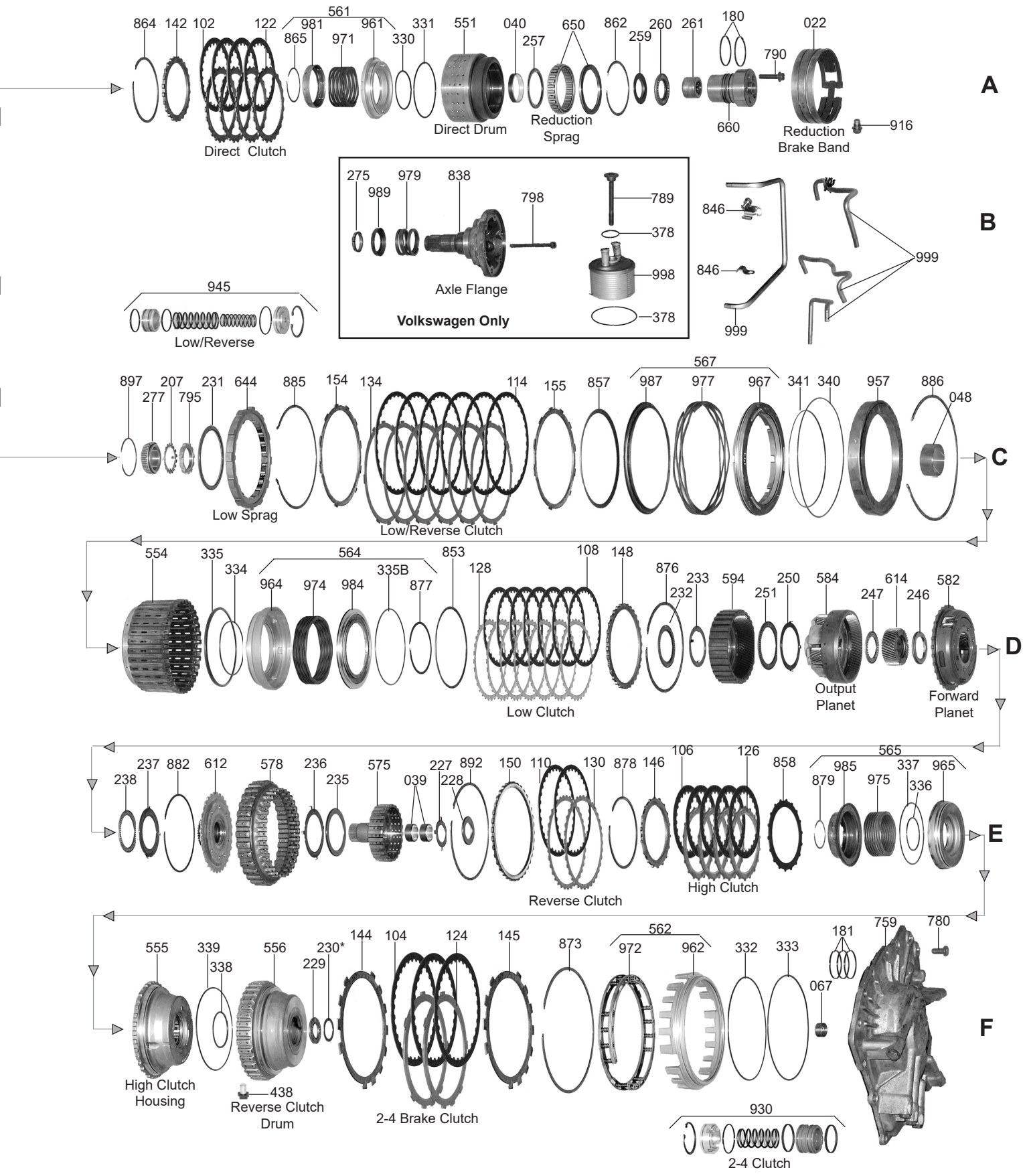

1-800-940-0197

© Whatever It Takes Transmission Parts. Inc.

PART #	PAPER & RUBBER KIT	QTY	REFERENCE #
183000A	Paper & Rubber Kit, JF506E (All) 2002-Up	1	

PART #	OVERHAUL KIT	QTY	REFERENCE #
183002AP	Overhaul Kit, JF506E (All) (W/Bonded Retainer/Piston #985) 2002-Up	1	
183002BP	Overhaul Kit, JF506E (Mazda/Jaguar/Land Rover)(W/Bonded Retainer/Piston #985) 2002-Up	1	

PART #	MASTER L/STEELS KIT	QTY	REFERENCE #
183004AP	Master L/Steels Kit, JF506E (All) (W/Bonded Retainer/Piston #985) 2002-Up	1	
183004BP	Master L/Steels Kit, JF506E (Mazda/Jaguar/Land Rover)(W/Bonded Retainer/Piston #985) 2002-Up	1	

PART #	MASTER W/STEELS KIT	QTY	REFERENCE #
183006AP	Master W//Steels Kit, JF506E (All) (W/Bonded Retainer/Piston #985) 2002-Up	1	
183006BP	Master L/Steels Kit, JF506E (Mazda/Jaguar/Land Rover)(W/Bonded Retainer/Piston #985) 2002-Up	1	

PART #	FILTERS	QTY	REFERENCE #
183010A	Filter, JF506E (Freelander, Mazda, Jaguar) (With Round Pick-Up) 2002-Up	1	
183010C	Filter, JF506E (Volkswagen) (With Rectangel Pick-Up) 2002-Up	1	
183010CA	Filter, JF506E (Volkswagen Sharon & Ford Galaxie)(Foreign) 2002-Up (With Square Pick-Up In The Corner)	1	

PART #	BANDS	QTY	REFERENCE #
183022A	Band, JF506E (All) Reduction Brake (1.460” Wide) 2002-Up	1	

PART #	BUSHINGS	QTY	REFERENCE #
183030A	Bushing Kit, JF506E (All) 2002-Up	1	
183034A	Use 83034A	1	
83034A	Bushing, JF506E (All) Pump Body (1.775”OD)(1.654”ID) 2002-Up	1	
183036A	Bushing, JF506E (All) Stator (1.040”OD)(.925”ID) 2002-Up	1	
183039A	Bushing, JF506E (All) High Clutch Hub (.432” Tall) .885”OD (.790”ID) 2002-Up	2	
183040A	Bushing, JF506E (All) Direct Drum (.610” Wide) 1.990”OD (1.855”ID) 2002-Up	1	
183045A	Bushing, JF506E (All) Drive Transfer Gear (Rear) .985”OD (.865”ID) (Bronze) 2002-Up	1	
183048A	Bushing, JF506E (All) Low Clutch Drum (3.135”OD) 3.070”ID (12 Holes) (Babbit) 2002-Up	1	
183067A	Bushing, JF506E (All) Rear Cover (.745”OD, .625”ID) 2002-Up	1	

PART #	METAL CLAD SEALS	QTY	REFERENCE #
183070A	Use 83070A	1	
83070A	Seal, JF506E (All) Front (2.335”OD) 2002-Up	1	
183072A	Seal, JF506E (All) Shift Lever (.975”OD, .560”ID) 2002-Up	1-2	
183076A	Seal, JF506E (Freelander) Axle (Case Side) No Flange (2.285”OD, 1.550”ID) 2002-Up (The Seal For The Bell Housing Side Is In The Transfer Case And Does Not Come In The Transmission Kits)	1	
183076B	Seal, JF506E (Mazda) Axle (Both Sides) (2.207”OD, 1.550”ID) 2002-Up	2	
183076C	Seal, JF506E (Volkswagen) Axle (Both Sides) (2.830”OD, 2.270”ID) 2002-Up	2	
183076D	Seal, JF506E (Jaguar) Axle (Case Side) (With Flange) (2.285”OD, 1.550”ID) 2002-Up	1	
183077D	Seal, JF506E (Jaguar) Axle (Bell Housing Side) (2.680”OD, 2.150”ID) 2002-Up	1	

PART #	FRICTION CLUTCH	QTY	REFERENCE #
183102A	Friction, JF506E (All) Direct Clutch (.069”) 24 Teeth (4”OD) 2002-Up	3-4	
183104A	Friction, JF506E (All) 2-4 Brake Clutch (.063”) 32 Teeth (7 1/2”OD) 2002-Up	3	
183106A	Use 83106BA	5	
83106BA	Friction, JF506E (All) High Clutch (.063”) 24 Teeth (4.400”OD) 2002-Up	5	
23108E	Friction, JF506E (All) Low Clutch (.070”) 30 Teeth (5 7/16”OD) 2002-Up	6-7	
183110A	Friction, JF506E (All) Reverse Clutch (.063”) 32 Teeth (6 1/8”OD) 2002-Up	2	
183114A	Use 83114BA	5-6	
83114BA	Friction, JF506E (All) Low/Reverse Clutch (.071”) 32 Teeth (6.500”OD) 2002-Up	5-6	
183119A	Friction Module, JF506E (All) 2002-Up	1	

© Whatever It Takes Transmission Parts. Inc.

PART #	STEEL CLUTCH	QTY	REFERENCE #
183122A	Steel, JF506E (All) Direct Clutch (.079") 24 Teeth (3 3/8"ID) 2002-Up	4-5	
183124A	Steel, JF506E (All) 2-4 Brake Clutch (.118") 7 Teeth (6 5/8"OD) 2002-Up	2	
183126A	Steel, JF506E (All) High Clutch (.095") 18 Teeth (3.608"ID) 2002-Up	4	
183126B	Steel, JF506E (All) High Clutch (.062") 18 Teeth (3.608"ID) 2002-Up	4	
183128A	Steel, JF506E (All) Low Clutch (.055") 32 Teeth (4.845"ID) 2002-Up	6-7	
183130A	Steel, JF506E (All) Reverse Clutch (.079") 36 Teeth (5 5/8"OD) 2002-Up	2	
183134A	Steel, JF506E (All) Low/Reverse Clutch (.055") 10 Teeth (5.910"ID) 2002-Up	5-6	
183139A	Steel Module, JF506E (All) 2002-Up	1	

PART #	PRESSURE PLATES	QTY	REFERENCE #
183142A	Pressure Plate, JF506E (Freelander/Volkswagen) Direct Clutch (Top) .163" (24 Teeth) (3.385"ID) 2002-Up	1	
183142B	Pressure Plate, JF506E (Mazda) Direct Clutch (Top) .171" (24 Teeth) (3.385"ID) 2002-Up	1	
183142D	Pressure Plate, JF506E (Jaquar) Direct Clutch (Top) .178" (24 Teeth) (3.385"ID) 2002-Up	1	
183144A	Use 183145AB	1	
183145AA	Apply Plate, JF506E (Freelander/Volkswagen) 2-4 Brake Clutch (.140") 7 Teeth (6 5/8"ID) 2002-Up	1	
183145AB	Apply Plate, JF506E (Freelander/Volkswagen) 2-4 Brake Clutch (.163") 7 Teeth (6 5/8"ID) 2002-Up (Also Fits Pressure Plate, JF506E (All) 2-4 Brake Clutch #144 2002-Up)	1-2	
\183145BA	Apply Plate, JF506E (Mazda/Jaguar) 2-4 Brake Clutch (.298") 7 Teeth (6 5/8"ID) 2002-Up	1	
183145BB	Apply Plate, JF506E (Mazda/Jaguar) 2-4 Brake Clutch (.308") 7 Teeth (6 5/8"ID) 2002-Up	1	
183146AA	Pressure Plate, JF506E (All) High Clutch (.118") 18 Teeth (3.610"ID) 2002-Up	1	
183146AB	Pressure Plate, JF506E (All) High Clutch (.126") 18 Teeth (3.610"ID) 2002-Up	1	
183146AC	Pressure Plate, JF506E (All) HIgh Clutch (.134") 18 Teeth (3.610"ID) 2002-Up	1	
183146AD	Pressure Plate, JF506E (All) High Clutch (.142") 18 Teeth (3.610"ID) 2002-Up	1	
183148A	Pressure Plate, JF506E (Freelander/Volkswagen/Mazda) Low Clutch (.170") 32 Teeth (4.845"ID) 2002-Up	1	
183148D	Pressure Plate, JF506E (Jaguar) Low Clutch (.160") 32 Teeth (4.845"ID) 2002-Up	1	
183150AA	Pressure Plate, JF506E (All) Reverse Clutch (.141") 36 Teeth (5.615"ID) 2002-Up	1	
183150AB	Pressure Plate, JF506E (All) Reverse Clutch (.150") 36 Teeth (5.615"ID) 2002-Up	1	
183150AC	Pressure Plate, JF506E (All) Reverse Clutch (.157") 36 Teeth (5.615"ID) 2002-Up	1	
183150AD	Pressure Plate, JF506E (All) Reverse Clutch (.165") 36 Teeth (5.615"ID) 2002-Up	1	
183154A	Pressure Plate, JF506E (Freelander/Jaguar/Volkswagen) Low/Reverse Clutch (Top) 10 Teeth (.148" Thick) (Stepped) 2002-Up	1	
183154B	Pressure Plate, JF506E (Mazda) Low/Reverse Clutch (Top) 10 Teeth (.250" Thick) (Stepped) 2002-Up	1	
183155A	Apply Plate, JF506E (Freelander/Jaguar/Mazda) Low/Reverse Clutch (.092" Thick) 10 Teeth (5.910"ID) (Flat) 2002-Up	1	
183155C	Apply Plate, JF506E (Volkswagen) Low/Reverse Clutch (.100" Thick) 10 Teeth (5.910"ID) (Flat) 2002-Up	1	

PART #	SEALING RINGS	QTY	REFERENCE #
183175A	Ring Kit, JF506E (All) 2002-Up	1	
183178AT	Ring, JF506E (All) Input Shaft (1.040"OD) (Teflon) 2002-Up	1	
183179AT	Ring, JF506E (All) Low Clutch (3.065"OD) (Vespel) 2002-Up (Lap Joint)	2	
183180AT	Ring, JF506E (All) Direct Clutch (On Support #660) .090" Thick (2.050"OD) Lap Joint (Vespel) 2002-Up	1	
183181AT	Ring, JF506E (All) Reverse Clutch (In Rear Cover) 1.750"OD (V Joint) Teflon 2002-Up	3	

PART #	WASHERS & BEARINGS	QTY	REFERENCE #
183207A	Lock Washer, JF506E (All) Sits Under Nut #795 2002-Up	1	
183227A	Race, JF506E (All) High Clutch Hub To Reverse Clutch Housing (4 Tab) (.032" Thick) 1.775"OD (1.080"ID) 2002-Up	1	
183228A	Bearing W/Race, JF506E (All) High Clutch Hub To Reverse Clutch Housing (.132" Thick) 1.810"OD (1.010"ID) 2002-Up	1	
183229A	Bearing W/Race, JF506E (All) Reverse Clutch Drum To Rear Cover (1.40" Thick) 1.725"OD (.910"ID) 2002-Up	1	
183230AA	Race, JF506E (All) Reverse Clutch Drum To Rear Cover (Selective) 1.660"OD (.982"ID) 2002-Up	1	
183231A	Bearing W/Race, JF506E (All) Support To Low Drum (.158" Thick) 4.355"OD (3.765"ID) 2002-Up	1	
183232A	Bearing W/Race, JF506E (All) Support To Output Ring Gear (.110" Thick) 2.830"OD (1.965"ID) 2002-Up	1	
183233A	Race, JF506E (All) Support To Output Ring Gear (.032" Thick) 2.740"OD (4 Tab) 2002-Up	1	
183235A	Use 183251A	1	

© Whatever It Takes Transmission Parts. Inc.

PART #	WASHERS & BEARINGS (Continued)	QTY	REFERENCE #
183236A	Race, JF506E (All) Forward Sun Gear Hub To High Clutch Hub (4 Tab) .032" Thick (3.150"OD) 2.360"ID 2002-Up	1	
183237A	Race, JF506E (All) Forward Planet To Forward Sun Gear Hub (4 Tab) .032" Thick (3.150"OD) 2.073"ID 2002-Up	1	
183238A	Bearing W/Race, JF506E (All) Forward Planet To Forward Sun Gear Hub (.110" Thick) 2.750"OD (2.055"ID) 2002-Up	1	
183246A	Bearing W/Races, JF506E (All) Output Sun Gear To Forward Planet (.190" Thick) 2.080"OD (1.390"ID) 2002-Up	1	
183247A	Bearing W/Race, JF506E (All) Output Planet To Output Sun Gear (.133" Thick) 2.080"OD (1.345"ID) 2002-Up	1	
183250A	Race, JF506E (Freelander) Output Ring Gear To Output Planet (4 Tab) .048" Thick (2.950"OD) 2.315"ID 2002-Up	1	
183250B	Race, JF506E (Mazda/Jaguar/Volkswagen) Output Ring Gear To Output Planet (3 Tab) (.048" Thick) 2.950"OD (2.315"ID) 2002-Up	1	
183251A	Bearing W/Race, JF506E (All) Output Ring Gear To Output Planet (.110" Thick) 3.065"OD (2.295"ID) 2002-Up (Also Fits JF506E (All) Forward Planet Sun Gear Hub To High Clutch Hub #235 2002-Up)	2	
183257A	Bearing W/Races, JF506E (All) Direct Drum To Support (.123" Thick) 2.592"OD (2.010"ID) 2002-Up	1	
183259A	Race, JF506E (Freelander) Reduction Sun Gear To Direct Drum Support (.071" Thick) (.829"ID) 2002-Up	1	
183259B	Race, JF506E (Mazda) Reduction Sun Gear To Direct Drum Support (.040" Thick) .912"ID 2002-Up	1	
183259C	Race, JF506E (Jaguar/Volkswagen) Reduction Sun Gear To Direct Drum Support (.071" Thick) (.912"ID) 2002-Up	1	
183260A	Bearing W/Race, JF506E (Freelander/Jaguar/Volkswagen) Reduction Sung Gear To Direct Drum Support (.117" Thick) (.830"ID) 2002-Up	1	
183260B	Bearing W/Race, JF506E (Mazda) Reduction Sun Gear To Direct Drum Support (.150" Thick) (.830"ID) 2002-Up	1	
183261A	Caged Needle Bearing, JF506E (All) Inside Direct Drum Support (11 Needles) Cast # NSK TORR VP1Z-1 (1.385"OD) 2002-Up (Sold With 183660A Support)	1	
183275C	Washer, JF506E (Volkswagen) Axle Flange To Differential (Split, Brass) (.250" Thick) With 6 Notches On The OD 2002-Up	1	
183277A	Use 183279A.	1	
183278A	Cup Race, JF506E (All) Support To Cone Bearings #277 & #279 (Double Tapered) (1.100" Thick) (2.285"OD) 2002-Up	1	
183279A	Cone Bearing, JF506E (All) Drive Transfer Gear To Support (HFT AR35-18G, NSK TC7JP) (.685" Thick, 1.377"ID) 2002-Up (Also Fits JF506E (All) #277)	2	
183280A	Double Cup Race, JF506E (All) Sits In Driven Transfer Gear (.865" Thick, 2.835"OD) 2002-Up	1	
183281A	Cone Bearing, JF506E (All) Driven Transfer Gear To Reduction Planet Shaft (Cast # AR35-20G HTF NSK) 25 Rollers (1.377"ID) 2002-Up	2	
183282A	Inner Race, JF506E (All) Under Nut On Reduction Planet Shaft (Cast # HTF P25-43G) (1.613"OD, .983"ID) 2002-Up	1	
183283A	Caged Roller Bearing, JF506E (Freelander) Bell Housing To Reduction Planet Shaft (16 Rollers) (2.445"OD) 2002-Up	1	
183283B	Caged Roller Bearing, JF506E (Mazda/Jaguar/Volkswagen) Bell Housing To Reduction Planet Shaft (16 Rollers) 2.755"OD (With 2 Flats On The Back Side) 2002-Up	1	
183284A	Bearing W/Race, JF506E (Freelander/Jaguar) Pinion Gear To Roller Bearing #283 (.126" Thick) 2.530"OD (1.755"ID) 2002-Up	1	
183284B	Bearing W/Race, JF506E (Mazda) Pinion Gear To Roller Bearing #283 (.131" Thick) 2.530"OD (1.755"ID) 2002-Up	1	
183284C	Bearing W/Race, JF506E (Volkswagen) Pinion Gear To Roller Bearing #283 (.161" Thick) 2.530"OD (1.755"ID) 2002-Up	1	
183288A	Cup Race, JF506E (Freelander/Volkswagen) Differential Housing To Case (Cast # NSK HR32914J) (3.940"OD) 2002-Up	1	
183288B	Cup Race, JF506E (Mazda/Jaguar) Differential Housing To Case (Cast # KOYO 32913JR) (3.545"OD) 2002-Up	1	
183289A	Cone Bearing, JF506E (Freelander/Volkswagen) Differential Housing To Case (31 Rollers) (Cast # NSK HR32914J) (2.754"ID) 2002-Up	1	
183289B	Cone Bearing, JF506E (Mazda/Jaguar) Differential Housing To Case (35 Rollers) (Cast # KOYO 32913JR) (2.555"ID) 2002-Up	1	
183291A	Cup Race, JF506E (Freelander/Volkswagen) Differential Housing To Bell Housing (Cast # NSK HR32010XJ) (3.150"OD) 2002-Up	1	
183291B	Cup Race, JF506E (Mazda/Jaguar) Differential Housing To Bell Housing (Cast # KOYO STC6088) (3.465"OD) 2002-Up	1	
183292A	Cone Bearing, JF506E (Freelander/Volkswagen) Differential Housing To Bell Housing (Cast # NSK HR32010XJA3) (24 Rollers) 2002-Up	1	

© Whatever It Takes Transmission Parts. Inc.

183292B ..... Cone Bearing, JF506E (Mazda/Jaguar) Differential Housing To Bell Housing
..... (Cast # KOYO STV6088) (29 Rollers) (2.363"ID) 2002-Up ..... 1 .....
183293AA ..... Shim, JF506E (Freelander/Volkswagen) Differential Bearing Race To Bell Housing
..... (Selective) (3.140"OD) (2.735"ID) 2002-Up ..... 1 .....
183293BA ..... Shim, JF506E (Mazda/Jaguar) Differential Bearing Race To Bell Housing (Selective)
..... (3.460"OD) (3.845"ID) 2002-Up ..... 1 .....

PART #	GASKETS & RUBBER COMPONENTS	QTY	REFERENCE #

183301A ..... Gasket, JF506E (All) Side Pan 2002-Up ..... 1 .....
183301AF ..... Gasket, JF506E (All) Side Pan (Farpak) 2002-Up ..... 1 .....
183307C ..... Gasket, JF506E (Volkswagen) Servo Cover (3 Bolt) 2002-Up ..... 1 .....
183310A ..... Gasket, JF506E (All) Pump Stator To Case 2002-Up ..... 1 .....
183311A ..... O-Ring, JF506E (All) Pump Body 2002-Up ..... 1 .....
183320A ..... Gasket, JF506E (Jaguar/Land Rover/Mazda/VW) Valve Body (Lower Plate) 2002-05 ..... 2 .....
183321A ..... Gasket, JF506E (Jaguar/Land Rover/VW) Valve Body (Upper Plate) 2002-05 ..... 2 .....
183321B ..... Gasket, JF506E (Mazda) Valve Body (Upper Palte) 2002-05 ..... 2 .....
183338AK ..... Seal Set, JF506E (All) Reverse Clutch Piston Seals (Contains: # 338 & # 339) 2002-Up ..... 1 .....
183380A ..... O-Ring, JF506E (All) Input Shaft (Front) To Converter 2002-Up ..... 1 .....

PART #	TECHNICAL MANUALS	QTY	REFERENCE #

183400A ..... Tech Manual, Jatco 5 Speed FWD Rebuild Procedures (ATRA) ..... 1 .....
183400AA ..... Tech Manual, JF506E (ALL) Update Handbook (ATSG) ..... 1 .....
183400B ..... Tech Manual, JF506E (Mazda) Overhaul & Repair (ATSG) ..... 1 .....
183401A ..... Tech Manual, Jatco 5 Speed FWD Rebuild Procedures On CD (ATRA) ..... 1 .....
183401AA ..... Tech Manual On CD, JF506E (All) Update Handbook (ATSG) ..... 1 .....

PART #	ELECTRICAL COMPONENTS	QTY	REFERENCE #

183410A ..... PRNDL Switch, JF506E (Freelander) 5 Wire (21 1/2" Long Wire Harness) 2002-Up ..... 1 .....
183410B ..... PRNDL Switch, JF506E (Mazda) 7 Wire (17" Long Wire Harness) 2002-Up ..... 1 .....
183410D ..... PRNDL Switch, JF506E (Jaguar) 9 Wire (16" Long Wire Harness) 2002-Up ..... 1 .....
183420A ..... Solenoid Kit, JF506E (Freelander, Jaguar, VW) (9 Solenoids) 1999-Up ..... 1 .....
183420B ..... Solenoid Kit, JF506E (Mazda) (9 Solenoids) 2002-Up ..... 1 .....
183421A ..... Solenoid, JF506E (Freelander/Jaguar/Volkswagen) Shift "A" (With 1 Blade Brown Connector)
..... (1 Bolt) (1 O-Ring) 2002-Up ..... 1 .....
183421B ..... Solenoid, JF506E (Mazda) Shift "A" (With 1 Blade Brown Connector) (1 Bolt) (2 O-Rings)
..... 2002-Up ..... 1 .....
183422A ..... Solenoid, JF506E (All) Shift "B" (With 1 Blade Brown Connector) (1 Bolt) 2002-Up ..... 1 .....
183423A ..... Solenoid, JF506E (Freelander/Jaguar/Volkswagen) Shift "C" (With 1 Blade Green Connector)
..... (1 Bolt) 2002-Up ..... 1 .....
183423B ..... Solenoid, JF506E (Mazda) Shift "C" (With 1 Blade Green Connector) (2 Bolt) 2002-Up ..... 1 .....
183425A ..... Solenoid, JF506E (Freelander/Jaguar/Volkswagen) TCC (With 1 Blade Black Connector)
..... (1 Bolt) 2002-Up ..... 1 .....
183425B ..... Solenoid, JF506E (Mazda) TCC (With 2 Prong White Connector) (3 Bolt) 2002-Up ..... 1 .....
183433A ..... Solenoid, JF506E (Freelander/Jaguar/Volkswagen) Low Clutch Timing (With 1 Blade Black
..... Connector) (2 Bolt) 2002-Up ..... 1 .....
183433B ..... Solenoid, JF506E (Mazda) High Clutch (With 2 Prong Yellow Connector) (No Bolt, Held On
..... With Cast Iron Bracket) 2002-Up (Also Fits JF506E (Mazda) 2-4 Brake Solenoid #450
..... 2002-Up) ..... 2 .....
183435A ..... Solenoid, JF506E (All) Pressure Control (1 Blade Green Connector) 2 Bolt
..... (With Ground Wire) 2002-Up ..... 1 .....
183436A ..... Sensor, JF506E (All) Output (Also Input #438 (All) And Intermediate #468 (All)
..... (Cast # RS-324C JC7 JP) 2002-Up (#436 Reads Off Of # 586, #438 Reads Off Of #556 And
..... #468 Reads Off Of #710) ..... 3 .....
183438A ..... Use 183436A ..... 1 .....
183445A ..... Wire Harness, JF506E (Freelander) External (26 1/2" Long) (18 Wire White Pass Through
..... Connector, With 1 Ten Prong And 1 Eight Prong Square Connector) 2002-Up ..... 1 .....
183445B ..... Wire Harness, JF506E (Mazda) External (17 1/2" Long) (18 Wire White Pass Through
..... Connector, With 2 Ten Prong And 2 Eight Prong Square Connectors) 2002-Up ..... 1 .....
183445C ..... Wire Harness, JF506E (Volkswagen) External (5 1/2" Long) (20 Wire Black Pass Through
..... Connector, With 1 Ten Prong And 1 Eight Prong Square Connectors) 2002-Up ..... 1 .....
183445D ..... Wire Harness, JF506E (Jaguar) External (20" Long) (18 Wire White Pass Through Connector,
..... With 1 Eighteen Prong Connector) 2002-Up ..... 1 .....
183446A-1 ..... Solenoid Wire Harness, JF506E (Freelander/Jaguar/Volkswagen) (Internal) (10 Prong
..... Connector With 9 One Blade Connector And A Ground) 2002-Up ..... 1 .....
183446A-2 ..... Wire Harness, JF506E (Jaguar/Freelander/Mazda) (Internal) (8 Prong Yellow Connector With
..... 3 Two Blade Connector And With Temperature Sensor) 2002-Up ..... 1 .....
183446A-4 ..... Clip, JF506E (All) Holds Wire Harness Connector To Case ..... 1 .....

© Whatever It Takes Transmission Parts. Inc.

PART #	ELECTRICAL COMPONENTS (Continued)	QTY	REFERENCE #
183446B-1	Solenoid Wire Harness, JF506E (Mazda) (Internal) (10 Prong Connector With 7 One Blade Connector And 2 Two Prong Connectors And A Ground) 2002-Up	1	
183446C-2	Wire Harness, JF506E (Volkswagen) (Internal) (8 Prong Red Connector With 3 Two Blade Connectors And A Temperature Sensor) 2002-Up	1	
183450A	Solenoid, JF506E (Freelander/Jaguar/Volkswagen) 2-4 Brake (With 1 Blade Yellow Connector) (2 Bolt) 2002-Up	1	
183450B	Use 183433B	1	
183451A	Solenoid, JF506E (Freelander/Jaguar/Volkswagen) Neutral Shift (With 1 Blade Black Connector) (2 Bolt) 2002-Up	1	
183451B	Solenoid, JF506E (Mazda) Neutral Shift (With 2 Prong Black Connector) (1 Bolt) 2002-Up	1	
183452A	Solenoid, JF506E (Freelander, Jaguar, Volkswagen) Reduction Timing (With 1 Blade Yellow Connector) (1 Bolt) 2002-Up	1	
183452B	Solenoid, JF506E (Mazda) Reduction Timing (With 1 Blade Yellow Connector)(1 Bolt) 2002-Up	1	
183468A	Use 183436A	1	

PART #	MISCELLANEOUS COMPONENTS	QTY	REFERENCE #
183493A	Plug, JF506E (Freelander/Volkswagen) Fluid Check (5mm Allen Head) 2002-Up	1	
183493B	Plug, JF506E (Mazda/Jaguar) Fluid Check (14mm Hex Head) 2002-Up (Also Used In All For Pressure Taps Plugs)	1	
183494A	Fluid Level Tube, JF506E (Freelander/Mazda/Jaguar) (5mm Allen Head, 2” Long) 2002-Up	1	
183494C	Fluid Level Tube, JF506E (Volkswagen) (5mm Allen Head, 3/4” Long) 2002-Up	1	

PART #	HARD PARTS	QTY	REFERENCE #
183500A	Pump Complete, JF506E (All) (32 Spline Aluminum Stator) (Cast Iron Body With 2 Flats On Inner Gear) 2002-Up	1	
183510A	Body W/Gears, JF506E (All) Pump (8 Bolt) (Cast Iron) 2002-Up (With 2 Flats On Inner Gear)	1	
183520A	Stator, JF506E (All) (Aluminum) (7 Bolts To Case) (32 Splines) 2002-Up	1	

PART #	PUMP COMPONENTS	QTY	REFERENCE #
183530A	Gear Set, JF506E Pump (.524” Thick) (9 Teeth Inner Gear With 2 Flats) 2002-Up	1	

PART #	HARD PARTS (Continued)	QTY	REFERENCE #
183551A	Drum, JF506E (Freelander) Direct Clutch (With 23 Sun Gear Splines)(.350” Inside Bottom Wall Height) 2002-Up	1	
183551AA	Drum, JF506E (Freelander) Direct Clutch (With 23 Sun Gear Splines)(.410” Inside Bottom Wall Height) 2002-Up	1	
183551B	Drum, JF506E (Mazda/Jaguar) Direct Clutch (With 31 Sun Gear Splines) (.340” Inside Bottom Wall Height) 2002-Up	1	
183551C	Drum, JF506E (Volkswagen) Direct Clutch (31 Sun Gear Splines) (.410” Inside Bottom Wall Height) 2002-Up	1	
183554A	Drum, JF506E (All) Low Clutch (6 or 7 Clutch) (32 Teeth Steels) 2002-Up	1	
183555A	Housing, JF506E (All) High Clutch (Aluminum) (2.115” Thick) (2.050”ID) (This Is The First Design) 2002-Up (Has A Step Below Where The Piston O-Ring #337 Sets 0.340” Tall)	1	
183555B	Housing, JF506E (All) High Clutch (Aluminum) (2.115” Thick)(2.050”ID)(This Is The 2nd Design) 2002-Up (Has A Step Below Where The Piston O-Ring #337 Sets 0.310” Tall)(Does Not Come With #965)	1	
183555BK	Housing & Piston, JF506E (All) High Clutch (Aluminum) (2.115” Thick)(2.050”ID) With Piston # 965 (This Is The 2nd Design) 2002-Up (Can Use Just The Housing # 183555B If Customers Piston # 965 Is Good)	1	
183556A	Drum, JF506E (All) Reverse Clutch (Stamped Steel) (36 Teeth Steels) (2.875” Tall) (1.766”ID Bore) 2002-Up	1	
183556AK	Drum Kit, JF506E (All) Reverse Clutch (Contains: All Parts From Part # 892 Snap Ring To #556 Drum (Except #965) With Frictions & Steels)	1	
183561A	Piston Kit, JF506E (Freelander/Mazda/Jaguar) Direct Clutch (.330” Thick At The Edge Of The Piston) 2002-Up	1	
183561C	Piston Kit, JF506E (Volkswagen) Direct Clutch (.270” Thick At The Edge Of The Piston) 2002-Up	1	
183562A	Piston Kit, JF506E (All) 2-4 Brake Clutch (Aluminum Piston #962 Is .250” Wide From Inner To Outer O-Ring) 2002-Up	1	
183562AA	Piston Kit, JF506E (Freelander, Mazda, Jaguar) 2-4 Brake Clutch (Aluminum Piston #962 Is .300” Wide From Inner To Outer O-Ring) 2002-Up	1	
183564A	Piston Kit, JF506E (Freelander/Volkswagen/Mazda) Low Clutch (1.260” Thick Piston) 2002-Up	1	
183564D	Piston Kit, JF506E (Jaguar) Low Clutch (1.390” Thick Piston) 2002-Up	1	

© Whatever It Takes Transmission Parts. Inc.

183565A ..... Piston Kit, JF506E (All) High Clutch (Aluminum Piston) (With Bonded Retainer) 2002-Up ..... 1 .....
183567A ..... Piston Kit, JF506E (Freelander) Low/Reverse Clutch (.905" Thick Piston) 2002-Up ..... 1 .....
183567B ..... Piston Kit, JF506E (Mazda) Low/Reverse Clutch (.805" Thick Piston) 2002-Up ..... 1 .....
183567C ..... Piston Kit, JF506E (Volkswagen) Low/Reverse Clutch (.780" Thick Piston) 2002-Up ..... 1 .....
183567D ..... Piston Kit, JF506E (Jaguar) Low/Reverse Clutch (1.040" Thick Piston) 2002-Up ..... 1 .....
183575A ..... Clutch Hub, JF506E (All) High Clutch (24 Teeth) (2.815" Tall) 2002-Up ..... 1 .....
183578A ..... Clutch Hub, JF506E (All) 2nd Brake And Reverse Clutch (32 Teeth/32 Teeth) 2002-Up ..... 1 .....
183582A ..... Planet, JF506E (Freelander) Forward (3 Gear) (34 Teeth Sun Gear) 2002-Up ..... 1 .....
183582B ..... Planet, JF506E (Mazda/Jaguar/Volkswagen) Forward (4 Gear) (34 Teeth Sun Gear) 2002-Up ..... 1 .....
183584A ..... Planet, JF506E (Freelander) Output (4 Gear) (42 Teeth Sun Gear) (74 Teeth Ring Gear) 2002-Up ..... 1 .....
183584B ..... Planet, JF506E (Mazda/Jaguar/Volkswagen) Output (5 Gear) (42 Teeth Sun Gear) (74 Teeth Ring Gear) 2002-Up ..... 1 .....
183586A ..... Planet, JF506E (Freelander) Reduction W/Shaft (23 Teeth Sun Gear) (No Groove) (18 Parking Lugs) 2002-Up ..... 1 .....
183586B ..... Planet, JF506E (Mazda/Jaguar) Reduction W/Shaft (31 Teeth Sun Gear) (2 Groove) (18 Parking Lugs) 2002-Up ..... 1 .....
183586C ..... Planet, JF506E (Volkswagen) Reduction W/Shaft (31 Teeth Sun Gear) (1 Groove) (18 Parking Lugs) 2002-Up ..... 1 .....
183594A ..... Ring Gear, JF506E (All) Output Planet (75 Teeth) 2002-Up ..... 1 .....
183596A ..... Ring Gear, JF506E (Freelander) Reduction Planet (93 Teeth) 2 Notches (5.565"OD) 2002-Up ..... 1 .....
183596B ..... Ring Gear, JF506E (Mazda/Jaguar/Volkswagen) Reduction Planet (85 Teeth) (5.435"OD) 2002-Up ..... 1 .....
183612A ..... Sun Gear W/Hub, JF506E (All) Forward Planet (34 Teeth) (32 Outer Lugs) 2002-Up ..... 1 .....
183614A ..... Sun Gear, JF506E (All) Output Planet (42 Teeth) (20 Splines) (.910" Thick) (2.335"OD) 2002-Up ..... 1 .....
183616A ..... Sun Gear, JF506E (Freelander) Reduction Planet (32 Teeth, No Groove) (1.275" Thick) 2002-Up ..... 1 .....
183616B ..... Sun Gear, JF506E (Mazda/Jaguar) Reduction Planet (31 Teeth, 2 Groove) 2002-Up ..... 1 .....
183616C ..... Sun Gear, JF506E (Volkswagen) Reduction Planet (31 Teeth, 1 Groove) (1.255" Thick) 2002-Up ..... 1 .....

PART #	SPRAGS & ONE WAY CLUTCHES	QTY	REFERENCE #

183644A ..... Sprag, JF506E (All) Low (18 Rollers) 12 Teeth (.515" Thick) 2002-Up ..... 1 .....
183650A ..... Sprag, JF506E (All) Reduction (28 Elements) (.632" Thick) 2002-Up ..... 1 .....

PART #	HARD PARTS (Continued)	QTY	REFERENCE #

183660A ..... Support, JF506E (All) Direct Drum (2.875" Tall) (1.850"OD At Bushing Surface) 2002-Up ..... 1 .....
183670A ..... Shaft, JF506E (Freelander/Volkswagen) Input (12 1/2" Long) 20 Splines (2 Rings) 2002-Up ..... 1 .....
183670B ..... Shaft, JF506E (Mazda/Jaguar) Input (12 1/2" Long) 20 Splines (3 Rings) 2002-Up ..... 1 .....
183698A ..... Oil Deflector, JF506E (Freelander) 2 Bolt 2002-Up ..... 1 .....
183698B ..... Oil Deflector, JF506E (Mazda) 2 Bolt 2002-Up ..... 1 .....
183698C ..... Oil Deflector, JF506E (Volkswagen) 2 Bolt 2002-Up ..... 1 .....
183698D ..... Oil Deflector, JF506E (Jaguar) 2 Bolt 2002-Up ..... 1 .....
183699A ..... Oil Baffle, JF506E (Freelander) For #712 (2 Bolt) (5 1/2" Long) 2002-Up ..... 1 .....
183699B ..... Oil Baffle, JF506E (Mazda) For #712 (2 Bolt) (4 1/2" Long) 2002-Up ..... 1 .....
183699D ..... Oil Baffle, JF506E (Jaguar) For #712 (2 Bolt) (4 7/8" Long) 2002-Up ..... 1 .....
183710A ..... Gear, JF506E (Freelander) Drive Transfer (54 Teeth) 5.920"OD (Fits A 2 Ring Input Shaft #183670A) (.985"ID) 2002-Up ..... 1 .....
183710AA ..... Gear, JF506E (Jaguar) Drive Transfer (54 Teeth) 5.920"OD (Fits A 3 Ring Input Shaft #183670B) (1.050"ID Of Ring Bore) 2002-Up ..... 1 .....
183710B ..... Gear, JF506E (Mazda) Drive Transfer (41 Teeth) 6.085"OD (Fits A 3 Ring Input Shaft #183670B) (1.050"ID Of Ring Bore) 2002-Up ..... 1 .....
183710C ..... Gear, JF506E (Volkswagen) Drive Transfer (52 Teeth) 5.770"OD (Fits A 2 Ring Input Shaft #183670B) (.985"ID Of Bore) 2002-Up ..... 1 .....
183711A ..... Support, JF506E (Freelander/Jaguar/Mazda) Drive Transfer Gear (4 Notches Inside) (Uses 1 Snap Ring #898) 2002-Up ..... 1 .....
183711C ..... Support, JF506E (Volkswagen) Drive Transfer Gear (No Notches Inside) (Uses 2 Snap Rings #898 & #897) 2002-Up ..... 1 .....
183712A ..... Gear, JF506E (Freelander) Driven Transfer (65 Teeth No Groove) (With Ring Gear Hub) 2002-Up ..... 1 .....
183712B ..... Gear, JF506E (Mazda) Driven Transfer (47 Teeth, 1 Groove) (With Ring Gear Hub) 2002-Up ..... 1 .....
183712C ..... Gear, JF506E (Volkswagen) Driven Transfer (67 Teeth, 1 Groove) (With Ring Gear Hub) 2002-Up ..... 1 .....
183712D ..... Gear, JF506E (Jaguar) Driven Transfer (65 Teeth, 2 Groove) (With Ring Gear Hub) 2002-Up ..... 1 .....
183715A ..... Differential, JF506E (Freelander) 67 Teeth, No Groove (With 5 Small Windows In Housing) (25 Splines For Axle) 2002-Up ..... 1 .....

© Whatever It Takes Transmission Parts. Inc.

PART #	HARD PARTS (Continued)	QTY	REFERENCE #
183715B	Differential, JF506E (Mazda) 68 Teeth 4 Groove (With 2 Large Windows In Housing) 29 Roller Bearing # 292 (30 Splines For Axles) 2002-Up	1	
183715C	Differential, JF506E (Volkswagen) 69 Teeth, No Groove (2 Large Windows In Housing) 24 Roller Bearing #292 (30 Splines For Axles) 2002-Up	1	
183715D	Differential, JF506E (Jaguar) 68 Teeth, 4 Groove (With 10 Round Holes In Housing) (24 Splines For Axles) 2002-Up	1	
183716A	Differential Housing, JF506E (Freelander) (With 5 Small Windows) (25 Splines For Axles) 2002-Up	1	
183716B	Differential Housing, JF506E (Mazda) (With 2 Large Windows) (29 Roller Bearing #292) (30 Splines For Axles) 2002-Up	1	
183716C	Differential Housing, JF506E (Volkswagen) (With 2 Large Windows) (24 Roller Bearing #292) (30 Splines For Axles) 2002-Up	1	
183716D	Differential Housing, JF506E (Jaguar) (With 10 Round Holes) (24 Splines For Axles) 2002-Up	1	
183720A	Ring Gear, JF506E (Freelander) 67 Teeth, No Groove (12 Bolt) 1.245" Thick (With 2 ID Grooves On The Top Side) 2002-Up	1	
183720B	Ring Gear, JF506E (Mazda/Jaguar) 68 Teeth, 4 Groove (12 Bolt) 1.245" Thick (With 3 ID Grooves On The Top Side) 2002-Up	1	
183720C	Ring Gear, JF506E (Volkswagen) 69 Teeth, No Groove (12 Bolt) 1.245" Thick (No ID Groove On The Top Side) 2002-Up	1	
183730A	Pinion, JF506E (Freelander) 22 Teeth, 4 Groove (1.540" Thick) 2002-Up	1	
183730B	Pinion, JF506E (Mazda/Jaguar) 21 Teeth, 3 Groove (1.520" Thick) 2002-Up	1	
183730C	Pinion, JF506E (Volkswagen) 20 Teeth, No Groove (1.540" Thick) 2002-Up	1	
183740A	Valve Body, JF506E (Freelander/VW) With 2 Tubes (All Stamped Steel Solenoid Brackets) 2002-Up (WIT Rebuilt)(Customer Must Use His Manual Valve)	1	
183740B	Valve Body, JF506E (Mazda) With 1 Tube (With 2 Cast Iron Solenoid Brackets) (Cast # PM SUB) 2002-Up (Customer Must Use His Own Manual Valve)	1	
183740C	Valve Body, JF506E (Jaguar) With 2 Tubes (All Stamped Steel Solenoid Brackets) 2002-Up (Wit Rebuilt)(Customer Must Use His Manual Valve)	1	

PART #	VALVE BODY COMPONENTS	QTY	REFERENCE #
S183741CA-2K	Valve & Sleeve KIt, JF506E TCC Control Plunger (Sonnax)(Contains: Plunger Valve & Sleeve)	1	122892-01K
S183741CAK	Valve Assembly, JF506E TCC Control (Sonnax) (Contains: Control Valve, Spring, Plunger Valve & Plunger Valve Sleeve)	1	
S183741CPK	Valve Assembly, JF506E TCC Pressure Regulator (Sonnax) (Contains: Valve, Sleeve & Spring) (Must Use T-F-122892-TL10)	1	
T-F-122892-TL10	Tool For S183741CPK	1	
S183741PAK	Valve Kit, JF506E Pressure Regulator (Oversize)(Sonnax) (Contains: Valve, Spring And End Plug)(Must Use Tool # T-F-122892-TL3)	1	
T-F-122892-TL	Tool For S183741PAK	1	

PART #	HARD PARTS (Continued)	QTY	REFERENCE #
183750A	Bell Housing, JF506E (Freelander) (Cast # PRO43 By Seal) 12 Bolts To Case (Round Starter Hole) 2002-Up	1	
183750B	Bell Housing, JF506E (Mazda) (Cast # PM2 By The Seal & Filler Tube Hole) 22 Bolts To Case (Square Starter Hole) 2002-Up	1	
183750C	Bell Housing, JF506E (Volkswagen) (Cast # JP JC7 091 On Bottom) 21 Bolts To Case (Square Starter Hole) (External Oil Cooler On Top) 2002-Up	1	
183750D	Bell Housing, JF506E (Jaguar) Cast # PLO42 Inside (23 Bolts To Case) (Square Starter Hole) 2002-Up	1	
183759A	Rear Cover, JF506E (Freelander/Mazda/Jaguar) (Cast # PR002)(Piston #962 Is .250"Wide From Inner To Outer O-Ring) 2002-Up	1	
183759AA	Rear Cover, JF506E (Freelander, Mazda, Jaguar) (Cast # PR000)(Piston #962 Is .300"Wide From Inner To Outer O-Ring) 2002-Up	1	
183759C	Rear Cover, JF506E (Volkswagen) (Cast # PW001)(Pistin #962 Is .250" Wide From Inner To Outer O-Ring) 2002-Up	1	
183760A	Case, JF506E (Freelander) 21 Bolts To Bell (With Top Vent) (Uses A Snap Ring To Hold In The Servo) 2002-Up	1	
183760B	Case, JF506E (Mazda) 22 Bolts To Case (With Top Vent) (Uses A Snap Ring To Hold In The Servo) 2002-Up	1	
183760C	Case, JF506E (Volkswagen) 21 Bolts To Case (No Vent On Top) (Uses 3 Bolts To Hold In The Servo) 2002-Up	1	
183760D	Case, JF506E (Jaguar) 23 Bolts To Case (No Vent On Top) (Uses A Snap Ring To Hold In The Servo) 2002-Up	1	
183766A	Pan, JF506E (Freelander) Side (2 Studs) (Dipstick Tube Is 3/4" Tall And Is At The Top In The Center) 2002-Up	1	
183766B	Pan, JF506E (Mazda) Side (No Studs) (No Filler Tube) 2002-Up	1	

© Whatever It Takes Transmission Parts. Inc.

183766C.....Pan, JF506E (Volkswagen) Side (4 Studs) (Filler Tube Is 3/4" Tall And Is At The Left Top Of Pan) (Metal Vent Is 1/4"OD Right Top) 2002-Up.....1
183766D.....Pan, JF506E (Jaguar) Side (3 Studs) Filler Tube Is 7/8" Tall And Is At Left Top Of Pan (Plastic Vent Is 1 1/8"OD Right Top) 2002-Up.....1
183777AK.....Bolt Set, JF506E (All) Stator To Case (7 Pieces) 2002-Up (12mm, 1 5/8" Long).....1
183778AK.....Bolt Set, JF506E (All) Pump Stator To Body (8 Pieces) 2002-Up (5mm Allen Head, .820" Long) Also Fits JF506E (All) Support To Case #783.....2
183780AK.....Bolt Set, JF506E (All) Rear Cover To Case (16 Pieces) 2002-Up.....1
183782AK.....Bolt Set, JF506E (All) Valve Body To Case (11 Pieces) 2002-Up.....1
183783AK.....Use 183778AK.....1
183786AK.....Bolt Set, JF506E (All) Differential Ring Gear (12 Pieces) 2002-Up.....1
183788AK.....Bolt Set, JF506E (All) Side Pan To Case (20 Pieces) 2002-Up.....1
183789C.....Bolt, JF506E (Volkswagen) Holds External Cooler On.....1
183790AK.....Bolt Set, JF506E (All) Direct Drum Support To Case (5 Pieces) (1.490" Long) 2002-Up.....1
183795A.....Nut, JF506E (All) Holds Drive Transfer Gear In Case (11 Outer Teeth) (1.340"ID) 2002-Up.....1
183796A.....Nut, JF506E (All) Reduction Planet Shaft (.885"ID) .553" Thick (6 Point) 2002-Up.....1
183798C.....Bolt, JF506E (Volkswagen) Axle Flange To Differential (3 3/8" Long) (Both Sides) 2002-Up.....2
183838C.....Axle Flange, JF506E (Volkswagen) Bell Housing Side (3 7/8" Long) 2002-Up.....1
183838CA.....Axle Flange, JF506E (Volkswagen) Case Side (4 3/8" Long) 2002-Up.....1
183853A.....Cushion, JF506E (All) Low Clutch (.060" Thick) (Dished) 2002-Up.....1
183857A.....Cushion, JF506E (All) Low/Reverse Clutch (.061" Thick) Beveled (6 9/16"OD) 2002-Up.....1
183858A.....Cushion, JF506E (All) High Clutch (.063" Thick) 18 Teeth (Dished) (3.608"ID) 2002-Up.....1
183862A.....Snap Ring, JF506E (All) Holds Sprag To Drum (.040" Thick) (3.410"OD) 2002-Up.....1
183864A.....Snap Ring, JF506E (All) Holds Direct Clutch Pressure Plate In Drum (.079" Thick) (4.310"OD) 2002-Up.....1
183865A.....Snap Ring, JF506E (All) Holds Direct Clutch Retainer In Drum (.040" Thick) (2.305"OD) 2002-Up.....1
183866A.....Snap Ring, JF506E (Freelander) Is A Stop For The Direct Drum (.077" Thick) (1.495"OD) 1
2002-Up.....1
183866B.....Snap Ring, JF506E (Mazda/Jaguar/Volkswagen) Is A Stop For The Direct Drum (.077" Thick) (1.915"OD) 2002-Up.....1
183868A.....Snap Ring, JF506E (All) Holds Reduction Planet Ring Gear To Driven Transfer Gear (.079" Thick) (5.462"OD) 2002-Up.....1
183869A.....Snap Ring, JF506E (All) Holds #280 Bearing Race To Driven Transfer Gear #712 (.062" Thick) (3.070"OD) 2002-Up.....1
183873A.....Snap Ring, JF506E (All) Holds 2-4 Brake Clutch Retainer In (.079" Thick) (8 1/16"OD) 2002-Up.....1
183876A.....Snap Ring, JF506E (All) Holds Low Clutch Pressure Plate In (.062" Thick) (5.695"OD) 2002-Up.....1
183877A.....Snap Ring, JF506E (All) Holds Low Clutch Spring Retainer To Drum (.052" Thick) (3.355"OD) 2002-Up.....1
183878A.....Snap Ring, JF506E (All) Holds High Clutch Pressure Plate In High Clutch Housing (.079" Thick) (4.765"OD) 2002-Up.....1
183879A.....Snap Ring, JF506E (All) Holds High Clutch Retainer In 2002-Up.....1
183882A.....Snap Ring, JF506E (All) Holds Forward Sun Gear Hub To Clutch Hub #578 (.062" Thick) (5.300"OD) 2002-Up.....1
183885A.....Snap Ring, JF506E (All) Holds Low Sprag To Case (.048" Thick) 6 15/16"OD (With Curved Out Ends) 2002-Up.....1
183886A.....Snap Ring, JF506E (Freelander/Volkswagen) Holds Low/Reverse Clutch Housing In Case (.087" Thick) 2002-Up.....1
183886B.....Snap Ring, JF506E (Mazda/Jaguar) Holds Low.Reverse Clutch Housing In Case (.083" Thick) 2002-Up.....1
183892A.....Snap Ring, JF506E (All) Holds Reverse Clutch Pressure Plate In Reverse Clutch (.078" Thick) (6 1/2"OD) 2002-Up.....1
183896A.....Snap Ring, JF506E (Freelander/Mazda/Jaguar) Holds Servo Cover On (.058" Thick) (2.735"OD) 2002-Up.....1
183897C.....Snap Ring, JF506E (Volkswagen) Holds Bearing #278 To Support (.033" Thick) (2.360"OD) 2002-Up.....1
183898A.....Snap Ring, JF506E (All) Holds Bearing Race #278 To Support (.063" Thick) (2.480"OD) 2002-Up.....1
183905A.....Servo Assembly, JF506E (Freelander) Reduction Brake (#908 Piston Is 1.955"OD) 2002-Up.....1
183905B.....Servo Assembly, JF506E (Mazda/Jaguar) Reduction Brake (#908 Piston Is 2.270"OD) 2002-Up.....1
183905C.....Servo Assembly, JF506E (Volkswagen) Reduction Brake (3 Bolt Cover) 2002-Up.....1
183906A.....Spring, JF506E (All) Reduction Brake Servo (.855"OD) (2.065" Long) 2002-Up.....1
183906BA.....Spring, JF506E (Freelander/Mazda/Jaguar) Non Tapered (1.020" Long) 2002-Up.....1
183906BC.....Spring, JF506E (Volkswagen) Reduction Brake Servo (Tapered) (1.020" Long) 2002-Up.....1
183907A.....Piston, JF506E (Freelander/Jaguar) Reduction Brake (Straight Neck) (1.955"OD) 2002-Up.....1
183907A-5.....Snap Ring, JF506E (All) Holds Reduction Drake Servo Piston #908 In The Case (.080" Thick) 2.500"OD (With 2 Eyelets) 2002-Up.....1

© Whatever It Takes Transmission Parts. Inc.

PART #	HARD PARTS (Continued)	QTY	REFERENCE #
183907B	Piston, JF506E (Mazda/Jaguar) Reduction Brake (With Stepped Neck) (1.955”OD) 2002-Up	1	
183908A	Piston, JF506E (Freelander) Reduction Brake Servo (1.955”OD)(2.860” Long Pin) 2002-Up	1	
183908A-5	Spacer, JF506E (All) Reduction Brake Servo Piston (With 6 Oval Slots) (.126” Thick) 2.350”OD (1.505”ID) 2002-Up	1	
183908B	Piston, JF506E (Mazda/Jaguar/Volkswagen) Reduction Brake Servo (2.270”OD) (2.470” Long Pin) 2002-Up	1	
183909A	Cover, JF506E (Freelander/Mazda/Jaguar) Reduction Brake Servo (2.515”OD) 2002-Up	1	
183909A-5	Snap Ring, JF506E (All) Holds Reduction Brake Servo Piston #907 In Cover (.040” Thick) (2.140”OD) 2002-Up	1	
183909C	Cover, JF506E (Volkswagen) Reduction Brake Servo (Bolt-On Type) (1.970”ID) 2002-Up	1	
183916A	Band Anchor, JF506E (Freelander/Volkswagon) (6 Point Hex Head) 2002-Up	1	
183916B	Band Anchor, JF506E (Mazda/Jaguar) (6 Point Fluted Head) 2002-Up	1	
183925A	Accumulator Assembly, JF506E (All) Low Clutch (Upper One In Valve Body) (Plastic Piston) (End Cap Is .482” Thick, 1.612”OD) (Spring Is 3.085” Long, 1.062”OD) 2002-Up	1	
183930A	Accumulator Assembly, JF506E (All) 2-4 Brake Clutch (In Rear Cover) (Plastic Piston) (End Cap Is .640” Thick, 1.612”OD) (Spring Id 2.863” Long, 1.062”OD) 2002-Up	1	
183935A	Accumulator Assembly, JF506E (All) High Clutch (Lower One In Valve Body) (Plastic Piston) (End Cap Is .482” Thick, 1.612”OD) (Spring Is 2.905” Long, 1.062”OD) 2002-Up	1	
183945A	Accumulator Assembly, JF506E (All) Low/Reverse Clutch (In Rear Of Case) (Alumunim Piston) (End Cap Is .560” Thick, 1.635”OD) (Outer Spring Is 2.085” Long, 1.055”OD) (Inner Spring Is 2.135” Long, .785”OD) 2002-Up	1	
183957A	Housing, JF506E (Freelander/Volkswagen) Low/Reverse Clutch Piston (.805” Thick) 2002-Up	1	
183957B	Housing, JF506E (Mazda/Jaguar) Low/Reverse Clutch Piston (.850” Thick) 2002-Up	1	
183961A	Piston, JF506E (Freelander/Mazda/Jaguar) Direct Clutch (.330” Thick At The Edge) 3.980”OD (2.220”ID) 2002-Up	1	
183961C	Piston, JF506E (Volkswagen) Direct Clutch (.270” Thick At The Edge) 3.980”OD (2.220”ID) 2002-Up	1	
183962A	Piston, JF506E (All) 2-4 Brake Clutch (Aluminum W/ 20 Legs) (1.545” Thick) (7 1/2”OD) (Piston Is .300” Wide From Inner To Outer O-Ring) 2002-Up	1	
183962AA	Piston, JF506E (Freelander, Mazda, Jaguar) 2-4 Brake Clutch (Aluminum W/20 Legs) (1.545”Thick)(7 1/2”OD)(Piston Is .300”Wide From Inner To Outer O-Ring) 2002-Up	1	
183964A	Piston, JF506E (Freelander/Volkswagen/Mazda) Low Clutch (1.260” Thick) (Aluminum) 2002-Up	1	
183964D	Piston, JF506E (Jaguar) Low Clutch (1.390” Thick) (Aluminum) 2002-Up	1	
183965A	Piston, JF506E (All) High Clutch (Aluminum) (.890” Thick) 4.405”OD (1.970”ID) 2002-Up	1	
183967A	Piston, JF506E (Freelander) Low/Reverse Clutch (.905” Thick) (Aluminum) 2002-Up	1	
183967B	Piston, JF506E (Mazda) Low/Reverse Clutch (.805” Thick) (Aluminum) 2002-Up	1	
183967C	Piston, JF506E (Volkswagen) Low/Reverse Clutch (.780” Thick) (Aluminum) 2002-Up	1	
183967D	Piston, JF506E (Jaguar) Low/Reverse Clutch (1.040” Thick) (Aluminum) 2002-Up	1	
183971A	Spring, JF506E (All) Direct Clutch Return (Spiral) (2.625”OD) 2002-Up	1	
183972A	Spring, JF506E (All) 2-4 Brake Clutch Return (16 Springs) .920” Thick (6 11/16”ID) 2002-Up	1	
183974A	Spring, JF506E (All) Low Clutch Return (Spiral Type) (4.290”OD) 2002-Up	1	
183975A	Spring, JF506E (All) High Clutch Return (Spiral) 1.075” Thick (2.875”OD) 2002-Up	1	
183977A	Spring, JF506E (All) Low/Reverse Clutch Return (Spiral Type) (8”OD) 2002-Up	1	
183979C	Spring, JF506E (Volkswagen) Axle Flange To Differential (1.725”OD) (1” Tall) 2002-Up	1	
183981A	Retainer, JF506E (All) Direct Clutch Spring (2.820”OD) 2002-Up	1	
183984A	Retainer, JF506E (All) Low/Clutch Spring (.300” Thick) (Aluminum) 5.065”OD (12 ID Notches) 2002-Up	1	
183985A	Retainer/Piston, JF506E (All) High Clutch Spring (Bonded)(4.120”OD)(1.655”ID) 2002-Up	1	
183987A	Retainer, JF506E (All) Low/Reverse Clutch Spring (Tin) (7 5/16”OD) 2002-Up	1	
183989C	Retainer, JF506E (Volkswagen) Axle Flange Spring To Washer #275 (1.840”OD) With 2 Ears (Cup Retainer) 2002-Up	1	
183991A	Linkage Assembly, JF506E (Jaguar/Freelander) Internal (15 3/16” Long Rod With 2 O-Rings) 2002-Up	1	
183991A-7	Sleeve, JF506E (All) Manual Shaft To Case (Plastic) (.485”ID) 2002-Up	1	
183991B	Linkage Assembly, JF506E (Mazda) Internal (11 3/8” Long Rod With No O-Rings) 2002-Up	1	
183991C	Linkage Assembly, JF506E (Volkswagen) Internal (10 1/2” Long Rod With No O-Rings) 2002-Up	1	
183994A	Park Actuator, JF506E (Jaguar/Freelander/Mazda) 6 1/2” Long Rod With Clip 2002-Up	1	
183994C	Park Actuator, JF506E (Volkswagen) 5 3/4” Long Rod With Clip 2002-Up	1	
183995A	Park Pawl Assembly, JF506E (Jaguar/Freelander) 2002-Up	1	
183995B	Park Pawl Assembly, JF506E (Mazda) 2002-Up	1	
183995C	Park Pawl Assembly, JF506E (Volkswagen) 2002-Up	1	
183998C	Oil Cooler, JF506E (Volkswagen) External (1 Bolt, 3 3/4” Long) 2002-Up	1	
183999A	Tube Set, JF506E (Freelander/Mazda/Jaguar) Inside Case At Rear Cover (3 Pieces) 2002-Up	1	
183999A-1	Tube, JF506E (Freelander) Differential Bearing Feed (On The Back Of The Bell Housing) 2002-Up	1	

© Whatever It Takes Transmission Parts. Inc.

183999B-1 ..... Tube, JF506E (Mazda) Differential Bearing Feed (On The Back Of The Bell Housing) ..... 2002-Up ..... 1 .....
183999C ..... Tube Set, JF506E (Volkswagen) Inside Case At Rear Cover (3 Pieces) 2002-Up ..... 1 .....
183999C-1 ..... Tube, JF506E (Volkswagen) Differential Bearing Feed (On The Back Of The Bell Housing) ..... 2002-Up ..... 1 .....
183999CC ..... Tube Set, JF506E (Volkswagen) Cooler Feed (On The Back Of The Bell Housing) (2 Pieces) ..... 2002-Up ..... 1 .....
183999D-1 ..... Tube, JF506E (Jaguar) Differential Bearing Feed (On The Back Of The Bell Housing) ..... 2002-Up ..... 1 .....

© Whatever It Takes Transmission Parts. Inc.

002 Overhaul Kits

004 Master L/Steels Kit

006 Master W/Steels Kit

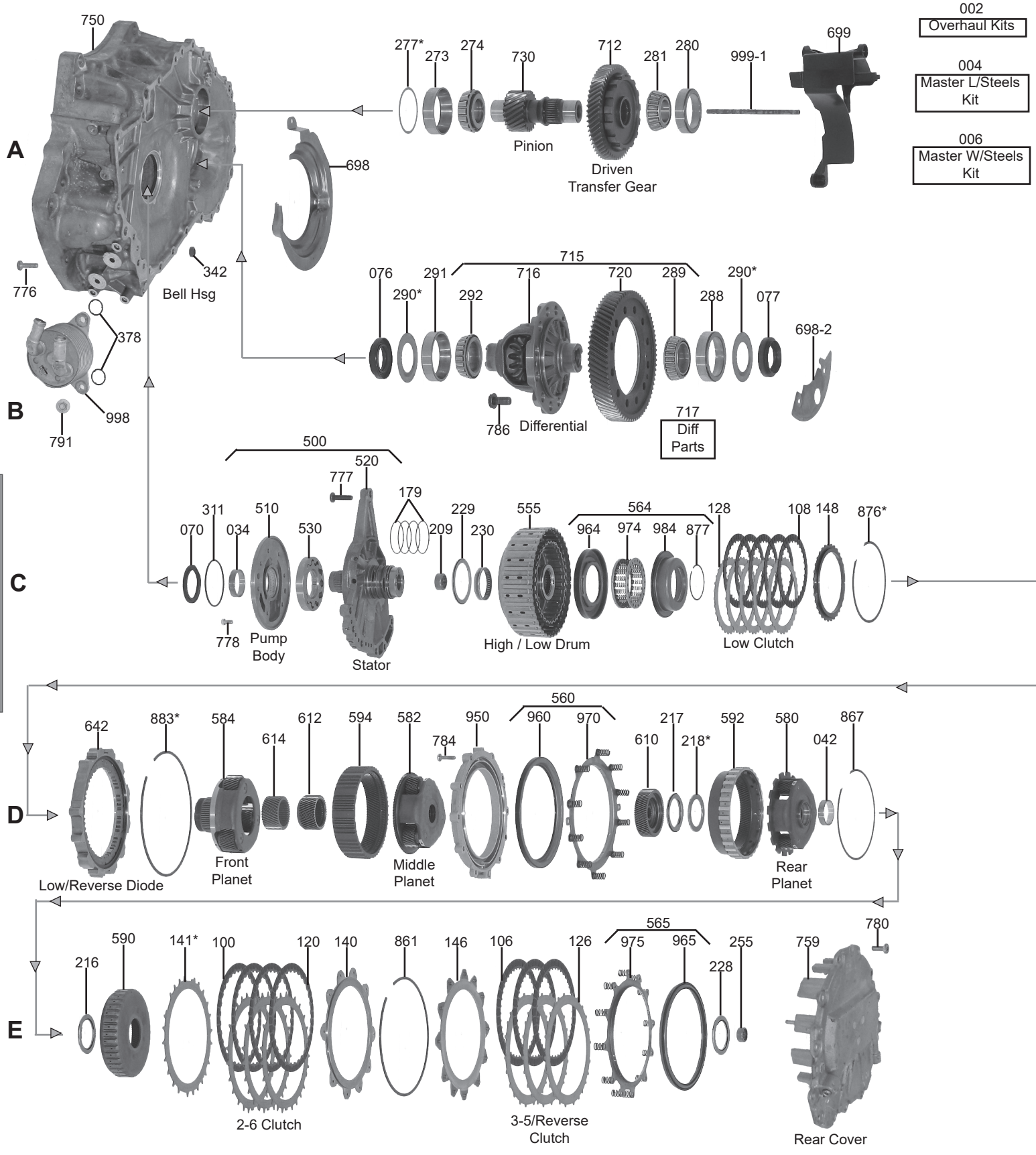

MAZDA

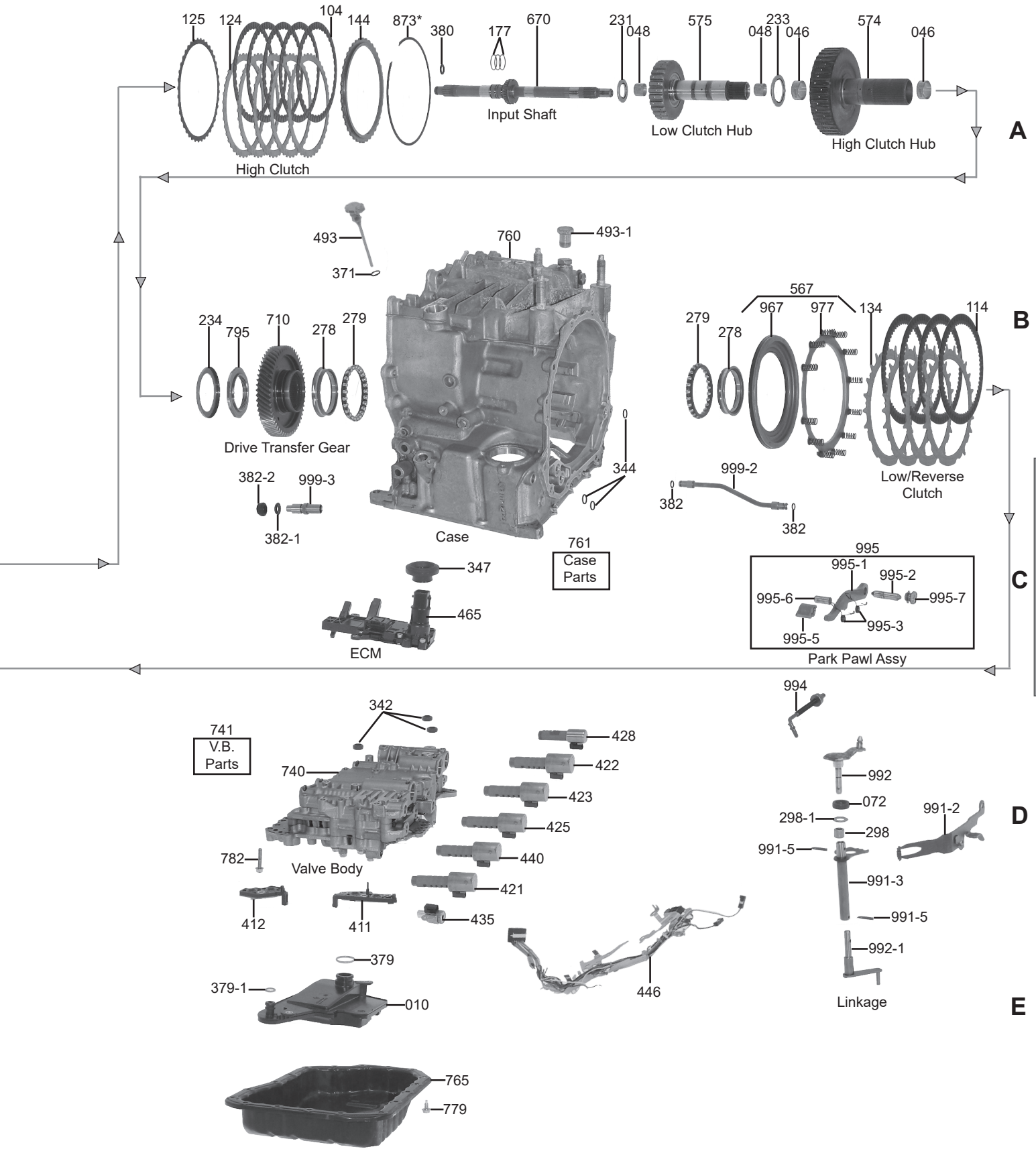

© Whatever It Takes Transmission Parts. Inc.

PART #	OVERHAUL KIT	QTY	REFERENCE #
238002AF	Overhaul Kit, FW6A-EL (Mazda 6 Speed)(With Duraprene Pan Gasket) 2011-Up (For Bonded Pistons Order A238960AK Seperately)	1	

PART #	MASTER L/STEELS KIT	QTY	REFERENCE #
238004A	Master L/Steels Kit, FW6A-EL 2012-Up	1	

PART #	MASTER W/STEELS KIT	QTY	REFERENCE #
238006A	Master W/Steels Kit, FW6A-EL 2012-Up	1	

PART #	FILTERS	QTY	REFERENCE #
238010A	Filter, FW6A-EL (2 Bolt)(Cast # FZ01-21-500) 2012-Up	1	FZ01-21-500

PART #	BUSHINGS	QTY	REFERENCE #
238034A	Bushing, FW6A-EL Pump Body (.495"Wide)(1.840"OD)(1.730"ID) 2012-Up	1	
238042A	Bushing, FW6A-EL Rear Planet (1.455"ID)(1.380"ID) 2012-Up	1	
238046A	Bushing, FW6A-EL High Clutch Hub (.625"Wide)(1.229"ID) 2012-Up	1	
238048A	Bushing, FW6A-EL Low Clutch Hub (.470"Wide)(.788"OD)(.710"ID) 2012-Up	2	

PART #	METAL CLAD SEALS	QTY	REFERENCE #
238070A	Seal, FW6A-EL Front Pump (.215" Thick)(2.365"OD)(1.689"ID) 2012-Up	1	FZ01-19-241
238072A	Seal, FW6A-EL Manual Lever (1.028"OD)(.615"ID) 2012-Up	1	FZ01-19-223
238076A	Seal, FW6A-EL Axle (Bell Housing Side)(2.565"OD)(1.530"ID) 2012-Up	1	FZ01-27-238
238077A	Seal, FW6A-EL Axle (Case Side)(2.490"OD)(1.500"ID) 2012-Up	1	FZ02-27-238

PART #	FRICTIONS	QTY	REFERENCE #
238100A	Friction, FW6A-EL 2-6 Clutch (.061")(32 Teeth)(6 3/4"OD) 2012-Up	4	FZ01-19-3VOA
238104A	Friction, FW6A-EL High Clutch (.062")(40 Teeth)(6 1/4"OD) 2012-Up	5	FZ21-19-580A
238106A	Friction, FW6A-EL 3-5/Reverse Clutch (.068")(40 Teeth)(6 5/8"OD) 2014	3	FZ01-19-5JOA
238108A	Friction, FW6A-EL Low Clutch (.060")(28 Teeth)(4.600"OD) 2012-Up	5	FZ21-19-590B
238114A	Friction, FW6A-EL Low/Reverse Clutch (.064")(60 Teeth)(6 7/8"OD) 2012-Up	4	FZ01-19-4FOA

PART #	STEELS	QTY	REFERENCE #
238120A	Steel, FW6A-EL 2-6 Clutch (.062")(26 Teeth)(5.825"ID) 2012-Up	3	FZ01-19-3S4
238124A	Steel, FW6A-EL High Clutch (.078")(40 Teeth)(5.508"ID) 2012-Up	5	FZ21-19-571
238125A	Steel, FW6A-EL High Clutch (.034")(40 Teeth)(5.700"ID)(Wavy) 2012-Up	1	FZ21-19-4F5
238126A	Steel, FW6A-EL 3-5/Reverse Clutch (.063")(24 Teeth)(5.585"ID) 2012-Up	3	FZ01-19-561
238128A	Steel, FW6A-EL Low Clutch (.079")(32 Teeth)(3.762"ID) 2012-Up	5	FZ21-19-334
238134A	Steel, FW6A-EL Low/Reverse Clutch (.062")(16 Teeth)(5.891"ID) 2012-Up	4	FZ01-19-451

PART #	PRESSURE PLATES	QTY	REFERENCE #
238140A	Pressure Plate, FW6A-EL 2-6 Clutch (.161")(10 Teeth)(5.810"ID) 2012-Up	1	FZ01-19-3V2
238141AA	Apply Plate, FW6A-EL 2-6 Clutch (.066")(24 Teeth)(5.825"ID) 2012-Up	1	FZ01-19-3R1
238141AB	Apply Plate, FW6A-EL 2-6 Clutch (.070")(24 Teeth)(5.825"ID) 2012-Up	1	FZ01-19-3R2
238141AC	Apply Plate, FW6A-EL 2-6 Clutch (.074")(24 Teeth)(5.825"ID) 2012-Up	1	FZ01-19-3R3
238141AD	Apply Plate, FW6A-EL 2-6 Clutch (.078")(24 Teeth)(5.825"ID) 2012-Up	1	FZ01-19-3R4
238141AE	Apply Plate, FW6A-EL 2-6 Clutch (.082")(24 Teeth)(5.825"ID) 2012-Up	1	FZ01-19-3R5
238141AF	Apply Plate, FW6A-EL 2-6 Clutch (.086")(24 Teeth)(5.825"ID) 2012-Up	1	FZ01-19-3R6
238141AG	Apply Plate, FW6A-EL 2-6 Clutch (.092")(24 Teeth)(5.825"ID) 2012-Up	1	FZ01-19-3R7
238141AH	Apply Plate, FW6A-EL 2-6 Clutch (.094")(24 Teeth)(5.825"ID) 2012-Up	1	FZ01-19-3R8
238141AJ	Apply Plate, FW6A-EL 2-6 Clutch (.098")(24 Teeth)(5.825"ID) 2012-Up	1	FZ01-19-3R9
238144A	Pressure Plate, FW6A-EL High Clutch (.124")(40 Teeth)(5.500"ID)(Stepped) 2012-Up	1	FZ21-19-578B
238146A	Pressure Plate, FW6A-EL 3-5/Reverse Clutch (.143")(12 Teeth)(5.585"ID) 2012-Up	1	FZ01-19-572
238148A	Pressure Plate, FW6A-EL Low Clutch (.085")(32 Teeth)(3.759"ID) 2012-Up	1	FZ21-19-5K2

PART #	SEALING RINGS	QTY	REFERENCE #
238177AT	Ring, FW6A-EL Input Shaft (Front)(.065"Thick)(.960"OD)(Teflon) 2012-Up	3	FZ21-19-212
238179AT	Ring, FW6A-EL Stator (Rear)(.075"Thick)(2.040"OD)(Teflon) 2012-Up	4	

© Whatever It Takes Transmission Parts. Inc.

PART #	WASHERS AND BEARINGS	QTY	REFERENCE #
238209A	Caged Needle Bearing, FW6A-EL Stator (Inner)(.786"ID)(Double Roll Of Needles) 2012-Up	1	
238216A	Bearing W/Races, FW6A-EL Rear Planet To Rear Ring Gear (.126"Thick)(2.467"OD)(1.742"ID) 2012-Up (Also Fits FW6A-EL Rear Planet Ring Gear To Rear Case # 228)	1-2	FZ01-19-6G5
238217A	Bearing W/Races, FW6A-EL Rear Sun Gear To Rear Planet (.221"Thick)(2.412"OD)(1.777"ID) 2012-Up	1	FZ01-19-6G6
238218AA	Race, FW6A-EL Rear Sun Gear To Rear Planet (.082"Thick)(2.337"OD)(1.661"ID) 2012-Up	1	FZ01-19-2K1
238218AB	Race, FW6A-EL Rear Sun Gear To Rear Planet (.086"Thick)(2.337"OD)(1.661"ID) 2012-Up	1	FZ01-19-2K2
238218AC	Race, FW6A-EL Rear Sun Gear To Rear Planet (.090"Thick)(2.337"OD)(1.661"ID) 2012-Up	1	FZ01-19-2K3
238218AD	Race, FW6A-EL Rear Sun Gear To Rear Planet (.094"Thick)(2.337"OD)(1.661"ID) 2012-Up	1	FZ01-19-2K4
238218AE	Race, FW6A-EL Rear Sun Gear To Rear Planet (.098"Thick)(2.337"OD)(1.661"ID) 2012-Up	1	FZ01-19-2K5
238218AF	Race, FW6A-EL Rear Sun Gear To Rear Planet (.102"Thick)(2.337"OD)(1.661"ID) 2012-Up	1	FZ01-19-2K6
238218AG	Race, FW6A-EL Rear Sun Gear To Rear Planet (.106"Thick)(2.337"OD)(1.661"ID) 2012-Up	1	FZ01-19-2K7
238218AH	Race, FW6A-EL Rear Sun Gear To Rear Planet (.110"Thick)(2.337"OD)(1.661"ID) 2012-Up	1	FZ01-19-2K8
238218AJ	Race, FW6A-EL Rear Sun Gear To Rear Planet (.114"Thick)(2.337"OD)(1.661"ID) 2012-Up	1	FZ01-19-2K9
238218AK	Race, FW6A-EL Rear Sun Gear To Rear Planet (.118"Thick)(2.337"OD)(1.661"ID) 2012-Up	1	FZ01-19-2L1
238228A	Use U238216A	1	
238229A	Bearing W/Races, FW6A-EL Pump To Drum (.126"Thick)(2.853"OD)(2.250"ID) 2012-Up	1	FZ21-19-324
238230A	Caged Needle Bearing, FW6A-EL Stator (Inner, Rear) 2012-Up	1	FZ21-19-545A
238231A	Bearing W/Races, FW6A-EL Input Shaft To Low Clutch Hub (.126"Thick)(1.462"OD)(.809"ID) 2012-Up	1	FZ01-19-305
238233A	Bearing W/Races, FW6A-EL Low Clutch Hub To High Clutch Hub (.138"Thick)(2.008"OD) (1.358"ID) 2012-Up	1	FZ01-19-2K2
238234A	Bearing W/Races, FW6A-EL High Clutch Hub To Drive Transfer Gear Nut (.262"Thick)(3.160"OD) (2.327"ID) 2012-Up	1	FZ01-19-3K8
238255A	Caged Needle Bearing, FW6A-EL Input Shaft To Rear Cover (.865"OD)(.555"ID) 2012-Up	1	
238273A	Cup Race, FW6A-EL Pinion To Bell Housing (.746"Thick)(2.950"OD)(Cast # HO616-1148-08) 2012-Up	1	
238274A	Cone Bearing, FW6A-EL Pinion To Bell Housing (1.397"ID)(16 Rollers)(Cast # HO616-1958-09) 2012-Up	1	
238277AA	Shim, FW6A-EL Pinion To Bell (.020"Thick)(2.905"OD)(2.562"ID) 2012-Up	1	FZ21-19-6K1
238277AB	Shim, FW6A-EL Pinion To Bell (.022"Thick)(2.905"OD)(2.562"ID) 2012-Up	1	FZ21-19-6K2
238277AC	Shim, FW6A-EL Pinion To Bell (.024"Thick)(2.905"OD)(2.562"ID) 2012-Up	1	FZ21-19-6K3
238277AD	Shim, FW6A-EL Pinion To Bell (.026"Thick)(2.905"OD)(2.562"ID) 2012-Up	1	FZ21-19-6K4
238277AE	Shim, FW6A-EL Pinion To Bell (.028"Thick)(2.905"OD)(2.562"ID) 2012-Up	1	FZ21-19-6K5
238277AF	Shim, FW6A-EL Pinion To Bell (.030"Thick)(2.905"OD)(2.562"ID) 2012-Up	1	FZ21-19-6K6
238277AG	Shim, FW6A-EL Pinion To Bell (.032"Thick)(2.905"OD)(2.562"ID) 2012-Up	1	FZ21-19-6K7
238277AH	Shim, FW6A-EL Pinion To Bell (.034"Thick)(2.905"OD)(2.562"ID) 2012-Up	1	FZ21-19-6K8
238277AJ	Shim, FW6A-EL Pinion To Bell (.036"Thick)(2.905"OD)(2.562"ID) 2012-Up	1	FZ21-19-6K9
238277AK	Shim, FW6A-EL Pinion To Bell (.038"Thick)(2.905"OD)(2.562"ID) 2012-Up	1	FZ21-19-6L1
238277AL	Shim, FW6A-EL Pinion To Bell (.040"Thick)(2.905"OD)(2.562"ID) 2012-Up	1	FZ21-19-6L2
238277AM	Shim, FW6A-EL Pinion To Bell (.042"Thick)(2.905"OD)(2.562"ID) 2012-Up	1	FZ21-19-6L3
238277AN	Shim, FW6A-EL Pinion To Bell (.044"Thick)(2.905"OD)(2.562"ID) 2012-Up	1	FZ21-19-6L4
238277AP	Shim, FW6A-EL Pinion To Bell (.046"Thick)(2.905"OD)(2.562"ID) 2012-Up	1	FZ21-19-6L5
238277AQ	Shim, FW6A-EL Pinion To Bell (.048"Thick)(2.905"OD)(2.562"ID) 2012-Up	1	FZ21-19-6L6
238277AR	Shim, FW6A-EL Pinion To Bell (.050"Thick)(2.905"OD)(2.562"ID) 2012-Up	1	FZ21-19-6L7
238277AS	Shim, FW6A-EL Pinion To Bell (.052"Thick)(2.905"OD)(2.562"ID) 2012-Up	1	FZ21-19-6L8
238277AT	Shim, FW6A-EL Pinion To Bell (.054"Thick)(2.905"OD)(2.562"ID) 2012-Up	1	FZ21-19-6L9
238277AU	Shim, FW6A-EL Pinion To Bell (.056"Thick)(2.905"OD)(2.562"ID) 2012-Up	1	FZ21-19-6M1
238277AV	Shim, FW6A-EL Pinion To Bell (.058"Thick)(2.905"OD)(2.562"ID) 2012-Up	1	FZ21-19-6M2
238278A	Inner Race, FW6A-EL Drive Transfer Gear To Case (.513"Thick)(3.090"OD)(2.559"ID) (Cast # HO719-2008 KBC F-569171) 2012-Up	2	
238279-1A	Outer Race, FW6A-EL Drive Transfer Gear To Case (Stays In Case) 2012-Up	1	
238279A	Ball Bearing, FW6A-EL Drive Transfer Gear To Case (Plastic Cage)(25 Balls) 2012-Up	2	
238280A	Cup Race, FW6A-EL Pinion To Case (.668"Thick)(2.756"OD) (Cast # HO613-0414008) 2012-Up	1	
238281A	Cone Bearing, FW6A-EL Pinion To Case (1.377"ID)(19 Rollers) (Cast # HO611-1626-09) 2012-Up	1	
238288A	Use U238291A	1	
238289A	Use U238292A	1	
238290AA	Shim, FW6A-EL Differential To Bell Housing (.020"Thick)(3.100"OD)(1.815") 2012-Up	1	FZ21-27-4O1
238290AB	Shim, FW6A-EL Differential To Bell Housing (.022"Thick)(3.100"OD)(1.815") 2012-Up	1	FZ21-27-4O2
238290AC	Shim, FW6A-EL Differential To Bell Housing (.024"Thick)(3.100"OD)(1.815") 2012-Up	1	FZ21-27-4O3
238290AD	Shim, FW6A-EL Differential To Bell Housing (.026"Thick)(3.100"OD)(1.815") 2012-Up	1	FZ21-27-4O4
238290AE	Shim, FW6A-EL Differential To Bell Housing (.028"Thick)(3.100"OD)(1.815") 2012-Up	1	FZ21-27-4O5
238290AF	Shim, FW6A-EL Differential To Bell Housing (.030"Thick)(3.100"OD)(1.815") 2012-Up	1	FZ21-27-4O6
238290AG	Shim, FW6A-EL Differential To Bell Housing (.032"Thick)(3.100"OD)(1.815") 2012-Up	1	FZ21-27-4O7
238290AH	Shim, FW6A-EL Differential To Bell Housing (.034"Thick)(3.100"OD)(1.815") 2012-Up	1	FZ21-27-4O8
238290AJ	Shim, FW6A-EL Differential To Bell Housing (.036"Thick)(3.100"OD)(1.815") 2012-Up	1	FZ21-27-4O9

© Whatever It Takes Transmission Parts. Inc.

PART #	WASHERS AND BEARINGS (Continued)	QTY	REFERENCE #
238290AK	Shim, FW6A-EL Differential To Bell Housing (.038"Thick)(3.100"OD)(1.815") 2012-Up	1	FZ21-27-411
238290AL	Shim, FW6A-EL Differential To Bell Housing (.040"Thick)(3.100"OD)(1.815") 2012-Up	1	FZ21-27-412
238290AM	Shim, FW6A-EL Differential To Bell Housing (.042"Thick)(3.100"OD)(1.815") 2012-Up	1	FZ21-27-413
238290AN	Shim, FW6A-EL Differential To Bell Housing (.044"Thick)(3.100"OD)(1.815") 2012-Up	1	FZ21-27-414
238290AP	Shim, FW6A-EL Differential To Bell Housing (.046"Thick)(3.100"OD)(1.815") 2012-Up	1	FZ21-27-415
238290AQ	Shim, FW6A-EL Differential To Bell Housing (.048"Thick)(3.100"OD)(1.815") 2012-Up	1	FZ21-27-416
238290AR	Shim, FW6A-EL Differential To Bell Housing (.050"Thick)(3.100"OD)(1.815") 2012-Up	1	FZ21-27-417
238290AS	Shim, FW6A-EL Differential To Bell Housing (.052"Thick)(3.100"OD)(1.815") 2012-Up	1	FZ21-27-418
238290AT	Shim, FW6A-EL Differential To Bell Housing (.054"Thick)(3.100"OD)(1.815") 2012-Up	1	FZ21-27-419
238290AU	Shim, FW6A-EL Differential To Bell Housing (.056"Thick)(3.100"OD)(1.815") 2012-Up	1	FZ21-27-422
238290AV	Shim, FW6A-EL Differential To Bell Housing (.058"Thick)(3.100"OD)(1.815") 2012-Up	1	FZ21-27-423
238290AW	Shim, FW6A-EL Differential To Bell Housing (.060"Thick)(3.100"OD)(1.815") 2012-Up	1	FZ21-27-424
238290AX	Shim, FW6A-EL Differential To Bell Housing (.062"Thick)(3.100"OD)(1.815") 2012-Up	1	FZ21-27-425
238291A	Cup Race, FW6A-EL Differential To Bell Housing (.709"Thick)(3.150"OD) (Cast # KOYO STE4580) 2012-Up (Also Fits FW6A-EL Differential To Case # 288)	1-2	
238292A	Cone Bearing, FW6A-EL Differential To Bell Housing (1.773"ID)(23 Rollers) (Cast # KOYO 32009JR-1YA1) 2012-Up (Also Fits FW6A-EL Differential To Case # 289)	1-2	
238298-1A	Washer, FW6A-EL Under Manual Lever Seal (.062"Thick)(.907"OD)(.447"ID) 2012-Up		FZ01-21-415
238298A	Caged Needle Bearing, FW6A-EL Case To Manual Shaft (.630"OD)(.393"ID)(12 Needles) (Cast # NTN 7E-HKS 10X16X10-1PX1) 2012-Up		FZ01-21-417

PART #	GASKETS & RUBBER COMPONENTS	QTY	REFERENCE #
238347A	Boot, FW6A-EL Case Connector (.950"Tall, 2.020"OD, 1.070"ID 2012-Up		FZ01-19-1X1

PART #	MISCELLANEOUS COMPONENTS	QTY	REFERENCE #
238411A	Pressure Switch A, FW6A-EL (3.850” Long)(Cast # 120731) 2012-Up	1	FZ01-21-2CO
238412A	Pressure Switch B, FW6A-EL (2.895” Long)(Cast # 120730) 2012-Up	1	FZ01-21-2JO
238421A	Solenoid, FW6A-EL Shift #1 (1.132”OD)(3.947” Long)(Cast # 7.5 On End Of Snout) 2012-Up (Also Fits FW6A-EL Shift #4 (#440) 2012-Up)	1-2	
238422A	Solenoid, FW6A-EL Shift #2 (1.132”OD)(3.840” Long)(Cast # 7.6 On End Of Snout) 2012-Up (Also Fits FW6A-EL Shift #3 (#423) & TCC (#425) 2012-Up)	1-3	
238423A	Use 238422A	1	
238425A	Use 238422A	1	
238428A	Solenoid, FW6A-EL Pressure Control (.836”OD)(3.004” Long) 2012-Up	1	
238435A	Solenoid, FW6A-EL On/Off (The Small One Next To Manual Valve 2012-Up	1	FZ01-21-1F1
238440A	Use 238421A	1	
238446A	Wire Harness, FW6A-EL (Internal)(One 20 Pin Connector, Eight 2 Pin Connecctors, With 2 Wire Temperature Switch) 2012-Up	1	FZ01-21-OAOA
238465A	ECM, FW6A-EL (14 Blade Connector)(Cast # K4238 FZ21 21 EMIC) 2012-Up	1	
238493-1A	Fill Plug, FW6A-EL On Top Of Case (23mm Hex Head) 2012-Up	1	
238493A	Dip Stick, FW6A-EL (1 Bolt, Plastic)(Cast # FZ0110AAO) 2012-Up	1	FZ01-19-9A1

PART #	HARDPARTS	QTY	REFERENCE #
238500A	Pump Assembly, FW6A-EL (Cast Iron)(7 Bolt) 2012-Up	1	
238510A	Pump Cover, FW6A-EL (Cast Iron) (5.785"OD)(7 Bolt) 2012-Up	1	FZ01-19-740
238520A	Stator W/Gears, FW6A-EL (Cast Iron)(7 Bolt) 2012-Up	1	
238530A	Pump Gear Set, FW6A-EL (.473" Thick)(3.350"OD)(2 Flats) 2012-Up	1	
238555A	Drum, FW6A-EL High/Low Clutch (5 Clutch) 2012-Up	1	
238560A	Piston Kit, FW6A-EL 2-6 Clutch (Bonded Piston) 2012-Up	1	
238564A	Piston Kit, FW6A-EL Low Clutch (Bonded Piston & Retainer) 2012-Up	1	
238565A	Piston Kit, FW6A-EL 3-5/Reverse Clutch (Bonded Piston) 2012-Up	1	
238567A	Piston Kit, FW6A-EL Low/Reverse Clutch (Bonded Piston) 2012-Up	1	
238574A	Clutch Hub, FW6A-EL High Clutch (40 Clutch Splines)(5 1/4" Long) 2012-Up	1	FZ21-19-5VO
238575A	Clutch Hub, FW6A-EL Low Clutch (28 Clutch Splines)(5 5/8"Long) 2012-Up	1	FZ21-19-5TO
238580A	Planet, FW6A-EL Rear (3 Gear)(1.630" Tall)(16 Outer Lugs) 2012-Up	1	FZ21-19-58XD
238582A	Planet, FW6A-EL Middle (3 Gear)(2.640" Tall) 2012-Up	1	FZ21-19-57XJ
238584A	Planet, FW6A-EL Front (3 Gear)(3.172"Tall)(2.085"OD Threads) 2012-Up	1	
238590A	Ring Gear, FW6A-EL Rear Planet (109 Teeth)(40 Outer Clutch Splines) 2012-Up	1	FZ01-19-HJOA
238592A	Ring Gear, FW6A-EL Middle Planet (95 Teeth)(With 32 Spline Aluminum Clutch Hub Pressed Onto The Ring Gear) 2012-Up	1	FZ21-19-533E
238594A	Ring Gear, FW6A-EL Front Planet (98 Teeth)(48 Outer Clutch Splines) 2012-Up	1	FZ21-19-533E
238610A	Sun Gear, FW6A-EL Rear Planet (68 Teeth)(1.182" Tall)(2.925"OD) 2012-Up	1	FZ21-19-6G6
238612A	Sun Gear, FW6A-EL Middle Planet (40 Teetth)(1.193” Tall)(2.105”OD) 2012-Up	1	FZ21-19-6T1A
238614A	Sun Gear, FW6A-EL Front Planet (38 Teeth)(1.032"Tall)(2.092"OD) 2012-Up	1	FZ21-19-5T2
238642A	Diode/Pressure Plate, FW6A-EL Low/Reverse (.750"Thick)(12 Outer Lugs) 2012-Up	1	FZ01-19-4GO

© Whatever It Takes Transmission Parts. Inc.

238670A	Input Shaft, FW6A-EL (12 1/2" Long) 2012-Up	1	FZ21-19-271
238698-2A	Oil Shield, FW6A-EL (2 Bolts To Case)(Tin)(7 1/4"Long) 2012-Up	1	FZ21-19-2A1
238698A	Oil Shield, FW6A-EL (3 Bolts To Bell Housing)(3/4 Round) 2012-Up	1	FZ21-19-2E1
238699A	Oil Shield, FW6A-EL (Black Plastic)(Cast # FZ21) 2012-Up	1	FZ21-19-3C7
238710A	Gear, FW6A-EL Drive Transfer (56 Teeth)(5.627"OD) 2012-Up	1	FZ01-19-5E7E
238712A	Driven Transfer Gear, FW6A-EL (59 Teeth)(5 1/2"OD)(With 15 Lug Park Gear) 2012-Up	1	FZ01-19-5ROC
238715A	Differential Assembly, FW6A-EL (12 Bolt)(6" Tall)(With 75 Teeth, 3 Groove Ring Gear) 2012-Up	1	
238716A	Diff Hsg, FW6A-EL(12 Bolt)(6" Tall)(Less Ring Gear)2012-Up	1	FZ21-27-200A
238720A	Ring Gear, FW6A-EL Differential (75 Teeth, 3 Groove)(12 Bolt)(1.215" Thick)(8 1/16"OD) 2012-Up	1	FZ21-27-112
238730A	Pinion, FW6A-EL (22 Teeth)(3 Light Grooves)(5 1/2"Tall) 2012-Up	1	FZ26-19-671A
238740A	Valve Body, FW6A-EL (Cast # FZ01) (6 Solenoid) 2012-Up	1	
238750A	Bell Housing, FW6A-EL (6 5/8" Top Bolts)(Starter At 3:00)(24 Bolts To Case)(Cast # FZ21) 2012-Up	1	
238759A	Rear Cover, FW6A-EL (12 Bolts) (Aluminum) 2012-Up	1	
238760A	Case, FW6A-EL (Cast # FZ21) (24 Bolts To Bell, 12 Bolt Rear Cover, 17 Pan Bolts)2012-Up	1	
238765A	Pan, FW6A-EL Bottom (16 Bolt) (Metal)(W/Allen Head Drain Plug) 2012-Up	1	
238776AK	Bolt Set, FW6A-EL Bell Housing To Case (24 Pieces) 2012-Up	1	
238777AK	Bolt Set, FW6A-EL Pump To Bell Housing (7 Pieces) 2012-Up	1	
238778AK	Bolt Set, FW6A-EL Pump Body To Stator (7 Pieces) 2012-Up	1	
238779AK	Bolt Set, FW6A-EL Bottom Pan To Case (16 Pieces) 2012-Up	1	
238780AK	Bolt Set, FW6A-EL Rear Cover To Case (12 Pieces) 2012-Up	1	
238782AK	Bolt Set, FW6A-EL Valve Body To Case (11 Pieces) 2012-Up	1	
238784AK	Bolt Set, FW6A-EL 2-6 Clutch Housing To Rear Cover (8 Pieces) 2012-Up	1	
238786AK	Bolt Set, FW6A-EL Differential Housing To Differential Ring Gear (12 Pieces) 2012-Up	1	
238791AK	Bolt Set, FW6A-EL Cooler To Bell Housing (3 Pieces) 2012-Up	1	
238795A	Nut, FW6A-EL Drive Transfer Gear To Support 2012-Up	1	
238861A	Snap Ring, FW6A-EL Holds 2-6 Clutch Pressure Plate In (.086" Thick)(7 3/8"OD) 2012-Up	1	FZ01-19-403
238867A	Snap Ring, FW6A-EL Holds Middle Planet Ring Gear To Rear Planet (.046" Thick)(5.635"OD) 2012-Up	1	FZ01-19-H25
238873AA	Snap Ring, FW6A-EL Holds High Clutch Pressure Plate In (.048" Thick)(6 3/4"OD) 2012-Up	1	FZ21-19-5V2
238873AB	Snap Ring, FW6A-EL Holds High Clutch Pressure Plate In (.052" Thick)(6 3/4"OD) 2012-Up	1	FZ21-19-5S1
238873AC	Snap Ring, FW6A-EL Holds High Clutch Pressure Plate In (.056" Thick)(6 3/4"OD) 2012-Up	1	FZ21-19-5S2
238873AD	Snap Ring, FW6A-EL Holds High Clutch Pressure Plate In (.060" Thick)(6 3/4"OD) 2012-Up	1	FZ21-19-5S3
238873AE	Snap Ring, FW6A-EL Holds High Clutch Pressure Plate In (.064" Thick)(6 3/4"OD) 2012-Up	1	FZ21-19-5S4
238873AF	Snap Ring, FW6A-EL Holds High Clutch Pressure Plate In (.068" Thick)(6 3/4"OD) 2012-Up	1	FZ21-19-5S5
238873AG	Snap Ring, FW6A-EL Holds High Clutch Pressure Plate In (.072" Thick)(6 3/4"OD) 2012-Up	1	FZ21-19-5S6
238873AH	Snap Ring, FW6A-EL Holds High Clutch Pressure Plate In (.076" Thick)(6 3/4"OD) 2012-Up	1	FZ21-19-5S7
238878AJ	Snap Ring, FW6A-EL Holds High Clutch Pressure Plate In (.080" Thick)(6 3/4"OD) 2012-Up	1	FZ21-19-5S8
238873AK	Snap Ring, FW6A-EL Holds High Clutch Pressure Plate In (.084" Thick)(6 3/4"OD) 2012-Up	1	FZ21-19-5S9
238873AL	Snap Ring, FW6A-EL Holds High Clutch Pressure Plate In (.088" Thick)(6 3/4"OD) 2012-Up	1	FZ21-19-5V1
238876AA	Snap Ring, FW6A-EL Holds Low Clutch Pressure Plate In (.048" Thick)(6 3/4"OD) 2012-Up	1	FZ21-19-3B1
238876AB	Snap Ring, FW6A-EL Holds Low Clutch Pressure Plate In (.052" Thick)(6 3/4"OD) 2012-Up	1	FZ21-19-3B2
238876AC	Snap Ring, FW6A-EL Holds Low Clutch Pressure Plate In (.056" Thick)(6 3/4"OD) 2012-Up	1	FZ21-19-3B3
238876AD	Snap Ring, FW6A-EL Holds Low Clutch Pressure Plate In (.060" Thick)(6 3/4"OD) 2012-Up	1	FZ21-19-3B4
238876AE	Snap Ring, FW6A-EL Holds Low Clutch Pressure Plate In (.064" Thick)(6 3/4"OD) 2012-Up	1	FZ21-19-3B5
238876AF	Snap Ring, FW6A-EL Holds Low Clutch Pressure Plate In (.068" Thick)(6 3/4"OD) 2012-Up	1	FZ21-19-3B6
238876AG	Snap Ring, FW6A-EL Holds Low Clutch Pressure Plate In (.072" Thick)(6 3/4"OD) 2012-Up	1	FZ21-19-3B7
238876AH	Snap Ring, FW6A-EL Holds Low Clutch Pressure Plate In (.076" Thick)(6 3/4"OD) 2012-Up	1	FZ21-19-3B8
238876AJ	Snap Ring, FW6A-EL Holds Low Clutch Pressure Plate In (.080" Thick)(6 3/4"OD) 2012-Up	1	FZ21-19-3B9
238876AK	Snap Ring, FW6A-EL Holds Low Clutch Pressure Plate In (.084" Thick)(6 3/4"OD) 2012-Up	1	FZ21-19-3D3
238877A	Snap Ring, FW6A-EL Holds Low Clutch Spring Retainer In (.039"Thick)(2.233"OD) 2012-Up	1	FZ21-19-355
238883AA	Snap Ring, FW6A-EL Holds Low/Reverse Clutch Pressure Plate In (.070" Thick)(7 3/4"OD) 2012-Up	1	FZ01-19-4B1
238883AB	Snap Ring, FW6A-EL Holds Low/Reverse Clutch Pressure Plate In (.074" Thick)(7 3/4"OD) 2012-Up	1	FZ01-19-4B2
238883AC	Snap Ring, FW6A-EL Holds Low/Reverse Clutch Pressure Plate In (.078" Thick)(7 3/4"OD) 2012-Up	1	FZ01-19-4B3
238883AD	Snap Ring, FW6A-EL Holds Low/Reverse Clutch Pressure Plate In (.082" Thick)(7 3/4"OD) 2012-Up	1	FZ01-19-4B4
238883AE	Snap Ring, FW6A-EL Holds Low/Reverse Clutch Pressure Plate In (.086" Thick)(7 3/4"OD) 2012-Up	1	FZ01-19-4B5
238883AF	Snap Ring, FW6A-EL Holds Low/Reverse Clutch Pressure Plate In (.090" Thick)(7 3/4"OD) 2012-Up	1	FZ01-19-4B6
238883AG	Snap Ring, FW6A-EL Holds Low/Reverse Clutch Pressure Plate In (.094" Thick)(7 3/4"OD) 2012-Up	1	FZ01-19-4B7
238883AH	Snap Ring, FW6A-EL Holds Low/Reverse Clutch Pressure Plate In (.098" Thick)(7 3/4"OD) 2012-Up	1	FZ01-19-4B8
238883AJ	Snap Ring, FW6A-EL Holds Low/Reverse Clutch Pressure Plate In (.102" Thick)(7 3/4"OD) 2012-Up	1	FZ01-19-4B9

© Whatever It Takes Transmission Parts. Inc.

PART #	HARDPARTS (Continued)	QTY	REFERENCE #
238883AK	Snap Ring, FW6A-EL Holds Low/Reverse Clutch Pressure Plate In (.106" Thick)(7 3/4"OD) 2012-Up	1	FZ01-19-4C1
238883AL	Snap Ring, FW6A-EL Holds Low/Reverse Clutch Pressure Plate In (.110" Thick)(7 3/4"OD) 2012-Up	1	FZ01-19-4C2
238889A	Snap Ring, FW6A-EL Holds Front Planet Ring Gear To Middle Planet (.123" Thick)(5.388"OD) (Stepped) 2012-Up	1	FZ01-19-308C
238950A	Piston Housing, FW6A-EL 2-6 Clutch (Aluminum)(8 Bolts To Rear Cover) (5.440"ID)(Cast # FZ01) 2012-Up	1	FZ01-19-3PX
238960A	Piston, FW6A-EL 2-6 Clutch (Bonded)(.355"Thick)(6 7/8"OD)(5.725"ID) 2012-Up	1	FZ01-19-3P2
238960AK	Piston Set, FW6A-EL 2011-Up	1	
238964A	Piston, FW6A-EL Low Clutch (Bonded) (.466"Thick)(4.407"OD)(2.300"ID) 2012-Up	1	FZ21-19-5D2
238965A	Piston, FW6A-EL 3-5/Reverse Clutch (Bonded)(.410" Thick)(6 5/8"OD)(5.755"ID) 2012-Up	1	FZ01-19-HJ5
238967A	Piston, FW6A-EL Low/Reverse Clutch (Bonded)(.650" Thick)(7 1/16"OD)(4.890"ID) 2012-Up	1	FZ01-19-438
238970A	Spring/Retainer, FW6A-EL 2-6 Clutch (1.113" Thick)(5.922"ID)(10 Springs) 2012-Up	1	FZ21-19-3PO
238974A	Spring/Retainer, FW6A-EL Low Clu(1.036"THK, 3.127"OD, 2.327"ID)(22 Springs)2012-Up	1	FZ21-19-5E0
238975A	Spring/Retainer, FW6A-EL 3-5/Reverse (.840"Thick)(5.885"ID)(12 Springs) 2012-Up	1	FZ21-19-5MO
238977A	Spring/Retainer, FW6A-EL Low/Reverse Clutch (1.132" Thick)(6.036"ID)(12 Springs) 2012-Up	1	FZ21-19-4NO
238984A	Retainer/Piston, FW6A-EL Low Clutch (Bonded)(.938" Thick)(4.170"OD)(2.165"ID) 2012-Up	1	FZ21-19-8ZO
238991-2A	Detent Spring, FW6A-EL Rooster Comb (2 Bolts To Case) 2012-Up	1	FZ01-21-4BO
238991-3A	Rooster Comb, FW6A-EL With Shaft (4.973" Long) 2012-Up	1	FZ01-21-420
238991-5A	Roll Pin, FW6A-EL Holds Manual Shaft To Rooster Comb (.160"OD)(1.010" Long) 2012-Up	2	
238992A	Manual Lever, FW6A-EL Upper External Lever (Letter "N") 2012-Up	1	FZK1-21-490
238994A	Park Rod Actuator, FW6A-EL (8 1/4" Long) 2012-Up	1	FZ01-21-460
238995A	Park Pawl Assembly, FW6A-EL (7 Pieces) 2012-Up		
238998A	Cooler, FW6A-EL (External)(3 Bolt To Bell Housing) 2012-Up		FZ01-19-9F0
238999-1A	Lube Pipe, FW6A-EL Inside The Pinion, From Bell Housing To Case (.310"OD)(6 1/2"Long) 2012-Up		FZ01-19-9A1
238999-2A	Lube Pipe, FW6A-EL Rear Cover To Bell Housing (7 3/4" Long) 2012-Up	1	
238999-3A	Lube Pipe Adapter, Fw6A-EL Rear Cover To Bell Housing Lube Pipe (2.165" Long) 2012-Up	1	

MAZDA

© Whatever It Takes Transmission Parts. Inc.

© Whatever It Takes Transmission Parts. Inc.

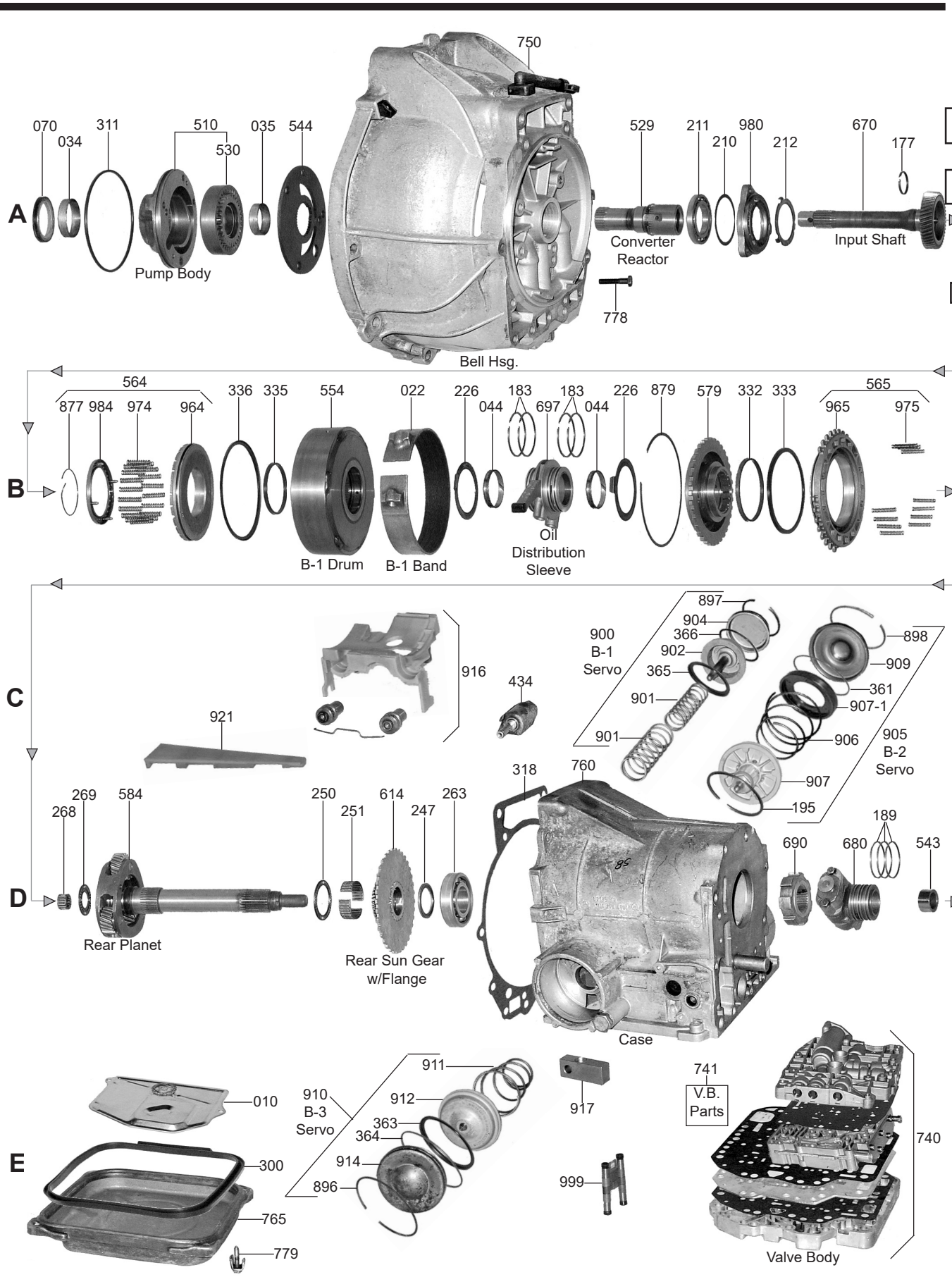

© Whatever It Takes Transmission Parts. Inc.

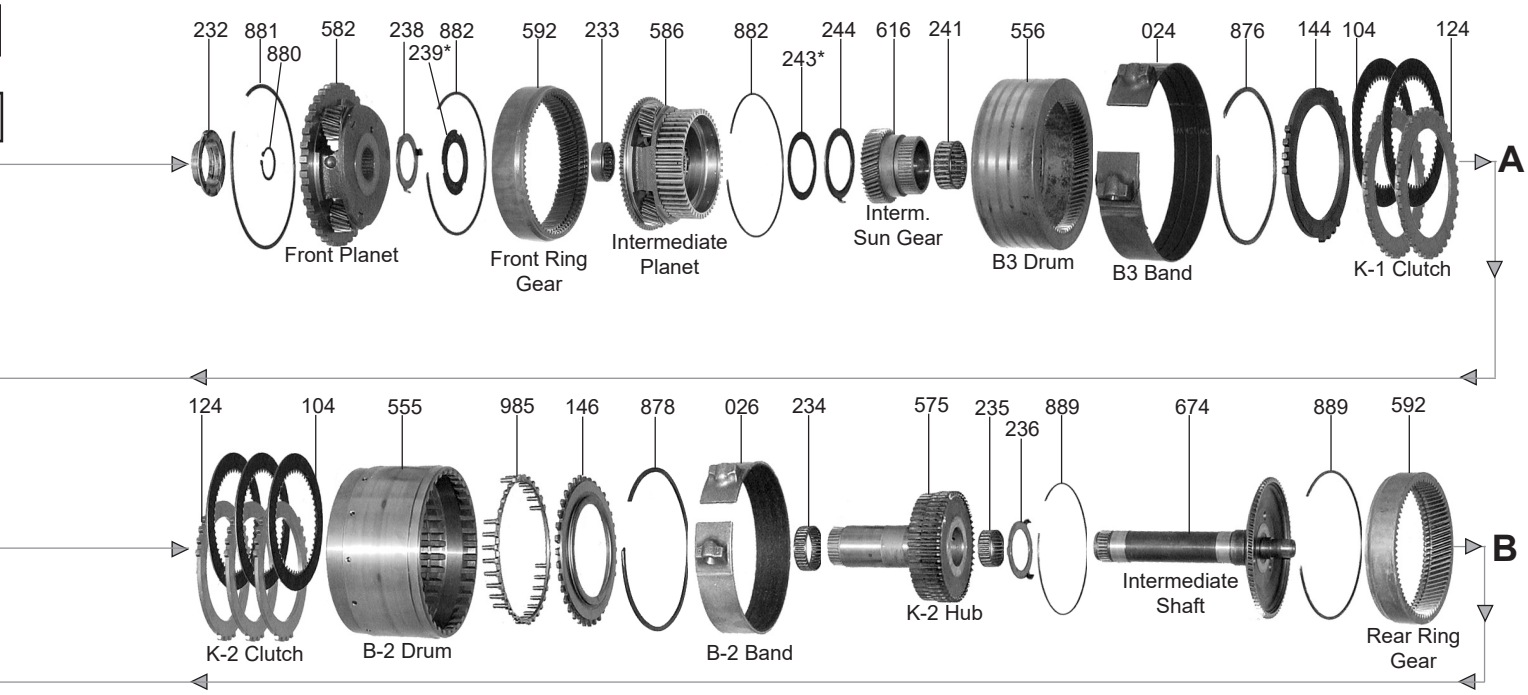

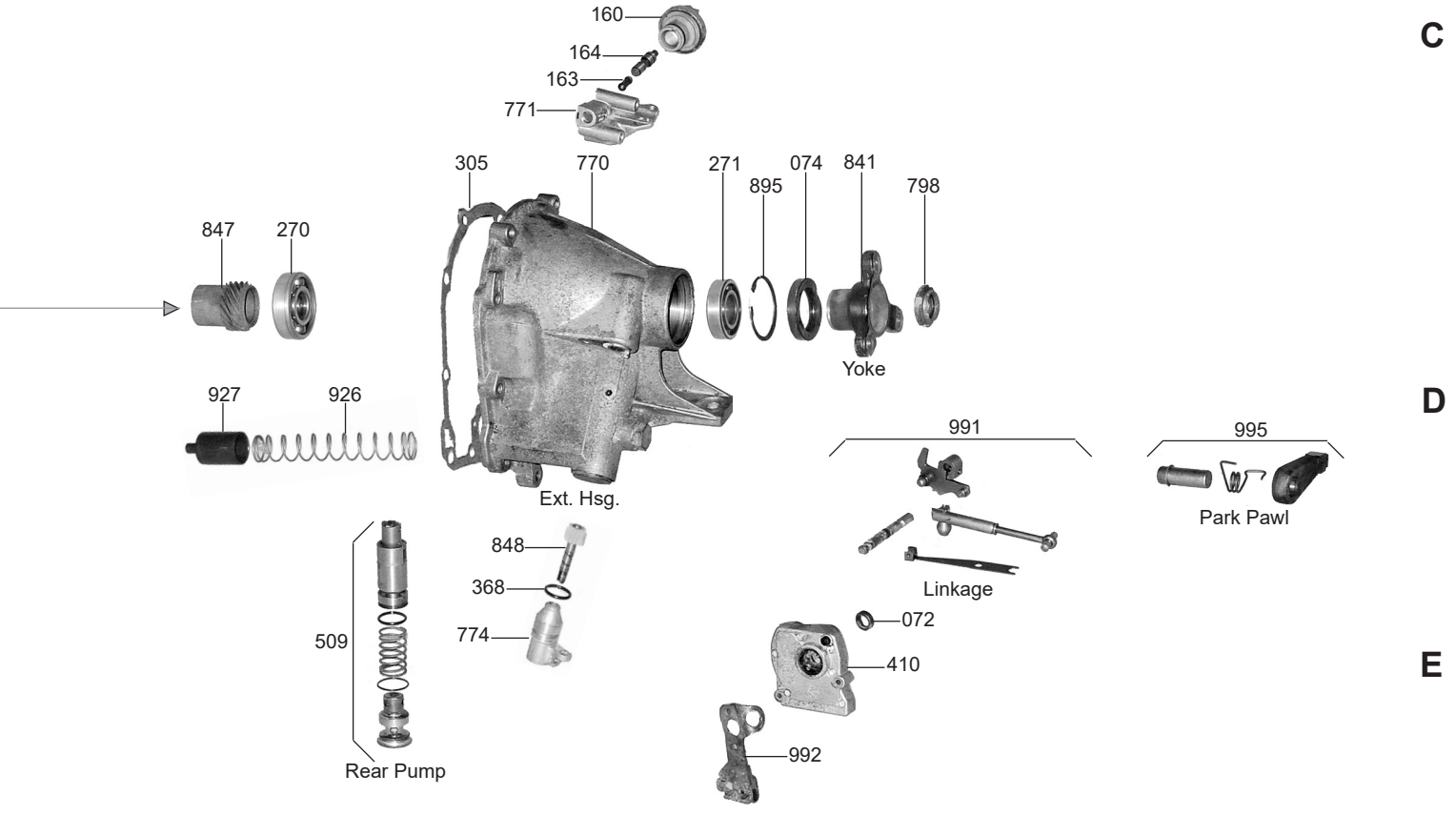

MERCEDES

© Whatever It Takes Transmission Parts. Inc.

PART #	PAPER & RUBBER KIT	QTY.	REFERENCE #
58000	Paper & Rubber Kit, 722.0 / 722.1 / 722.2 1970-83	1	

PART #	OVERHAUL KITS	QTY.	REFERENCE #
58002	Overhaul Kit, 722.0 / 722.1 / 722.2 1970-83	1	

PART #	MASTER L/STEEL KIT	QTY.	REFERENCE #
58004	Master L/Steels Kit, 722.0 / 722.1 1970-83 (Uses .086” Thick Frictions)	1	

PART #	MASTER W/STEEL KIT	QTY.	REFERENCE #
58006	Master W/Steels Kit, 722.0 / 722.1 / 722.2 1970-83	1	

PART #	FILTER	QTY.	REFERENCE #
58010	Filter, 722.0 / 722.1 / 722.2 Without Tube 1970-77	1	115-270-0398
58010A	Filter, 722.0 / 722.1 / 722.2 With 1” Long Tube 1972-83	1	109-270-0298
58010B	Filter, 722.0 / 722.1 / 722.2 With 3/4” Long Tube 1977-83	1	123-270-0098

PART #	FILTER KIT	QTY.	REFERENCE #
58011	Filter Kit, 722.0 / 722.1 / 722.2 Without Tube 1970-77	1	
58011A	Filter Kit, 722.0 / 722.1 / 722.2 With 1” Long Tube 1972-83	1	
58011B	Filter Kit, 722.0 / 722.1 / 722.2 With 3/4” Long Tube 1977-83	1	

PART #	BANDS	QTY.	REFERENCE #
58022C	Band, 722.0 / 722.1 / 722.2 Center 1 1/2” Wide (Round Holes In Lugs For Struts) Paper Lining (With 1 Groove) Has A Thin Strapping (.110” Thick With Lining) 1970-83	1	
58022D	Band, 722.0 / 722.1 / 722.2 Center 2” Wide (Round Holes In Lugs For Struts) Paper Lining (With 1 Groove) Has A Thin Strapping (.110” Thick With Lining) 1970-83	1	
58022F	Band, 722.0 / 722.1 / 722.2 Center 1 1/2” Wide (Oval Holes In Lugs For Struts) Paper Lining (With 1 Groove) Has A Thin Strapping (.110” Thick With Lining) 1970-83	1	
58024	Band, 722.0 / 722.1 / 722.2 Front 1 1/2” Wide (Round Holes In Lugs For Struts) Composition Lining (Has Thick Strapping (.170” Thick With Lining) 1970-83	1	
58024A	Band, 722.0 / 722.1 / 722.2 Front 1 1/2” Wide (Oval Holes In Lugs For Struts) Composition Lining (Has Thick Strapping (.170” Thick With Lining) 1970-83	1	
58026	Band, 722.0 / 722.1 / 722.2 Center & Rear 1 1/2” Wide (Round Holes In Lugs For Struts) Composition Lining Has A Thin Strapping (.130” Thick With Lining) 1970-83	1-2	
58026A	Band, 722.0 / 722.1 / 722.2 Center & Rear (2” Wide) Round Holes In Lugs For Struts (Composition Lining) Has A Thin Strapping (.130” Thick With Lining) 1970-83	1-2	
58026B	Band, 722.0 / 722.1 / 722.2 Center & Rear 1 1/2” Wide (Oval Holes In Lugs For Struts) Composition Lining Has A Thin Strapping (.130” Thick With Lining) 1970-83	1-2	
58026C	Band, 722.0 / 722.1 / 722.2 Rear 2” Wide (Split Band) Round Holes In Lugs For Struts (Composition Lining)	1	
58026D	Band, 722.0 / 722.1 / 722.2 Center & Rear (1 1/2” Wide) Round Holes In Lugs For Struts (Composition Lining) Has A Thin Strapping (.130” Thick With Lining) 1970-83	1-2	

PART #	BUSHINGS	QTY.	REFERENCE #
58034	Bushing, 722.1 Pump Body (1 1/16”OD Converter Hub)	1	
58034B	Bushing, 722.0 / 722.2 Pump Body (1 5/8”OD Converter Hub)	1	112-272-4350
58035	Bushing, 722.0 / 722.2 Inner Pump Gear	1	
58044	Bushing, 722.0 / 722.1 / 722.2 Oil Feed Sleeve	2	

PART #	METAL CLAD SEALS	QTY.	REFERENCE #
58070	Seal, 722.1 Front (1 1/16”OD Converter Hub)	1	008-997-2546
58070A	Seal, 722.0 / 722.2 Front (1 5/8”OD Converter Hub)	1	004-997-0547
58074	Seal, 722.0 / 722.1 / 722.2 Extention Housing	1	005-997-1146

PART #	FRICTION CLUTCH	QTY.	REFERENCE #
58104	Friction, 722.0 / 722.1 / 722.2 K1 & K2 Clutch (.083”) 51 Teeth	8	
58104A	Friction, 722.0 / 722.1 / 722.2 K1 & K2 Clutch (.098”) 51 Teeth	8	
58119	Friction Module, 722.0 (W3A040) / 722.1 (W4B025) (.086” Thick)(Waved) 1970-83	1	

© Whatever It Takes Transmission Parts. Inc.

PART #	STEEL CLUTCH	QTY.	REFERENCE #
58124	Steel, 722.0 / 722.1 / 722.2 K1 & K2 Clutch (2.0mm) (.079") 12 Teeth	AR	109-272-1526
58124A	Steel, 722.0 / 722.1 / 722.2 K1 & K2 Clutch (2.0mm) (.118") 12 Teeth	AR	109-272-0626
58124B	Steel, 722.0 / 722.1 / 722.2 K1 & K2 Clutch (2.0mm) (.138") 12 Teeth	AR	109-272-1426
58139	Steel Module, 722.0 / 722.1 / 722.2 (.079") 12 Teeth	1	

PART #	CLUTCH PRESSURE PLATES	QTY.	REFERENCE #
58144	Pressure Plate, 722.0 / 722.1 / 722.2 K1 Clutch	1	
58146	Backing Plate, 722.0 / 722.1 / 722.2 K2 Clutch	1	

PART #	MODULATORS	QTY.	REFERENCE #
58160C	Modulator, Steel/Plastic (Snap Ring Type) 1977-81	1	
58160D	Modulator, 722.0 / 722.1 / 722.2 Steel (With Green Dot)	1	
58160E	Modulator, 722.0 / 722.1 / 722.2 Steel (With Red Top)	1	
58163	Valve, 722.0 / 722.1 / 722.2 Under Modulator	1	
58164	Pin, 722.0 / 722.1 / 722.2 Modulator	1	

PART #	OIL SEALING RINGS	QTY.	REFERENCE #
58175	Ring Kit, 722.0 / 722.1 / 722.2	1	

PART #	WASHERS & BEARINGS	QTY.	REFERENCE #
58210	Shim, 722.0 / 722.1 / 722.2 Input Shaft (Front)	1	
58211	Ball Bearing, 722.0 / 722.1 / 722.2 Input Shaft (Front)	1	
58212	Washer, 722.1 / 722.2 Input Shaft (Front)	1	115-272-4562
58226	Washer, 722.0 / 722.1 / 722. 2 Oil Feed Sleeve (Takes 2)	2	115-270-1373
58229	Needle Bearing, 722.0 B-2 Hub To Hollow Shaft	1	
58232	Washer, 722.1 / 722.2 Input Shaft To Planet (Beveled Top Hat)	1	115-272-4962
58232A	Bearing, 722.0 Input Shaft To Planet (Flat)	1	
58232B	Bearing, 722.0 Input Shaft To Planet (450)	1	
58234	Bearing, 722.0 Hollow Shaft Front (450)	1	
58235	Needle Bearing, 722.0 / 722.1 / 722.2 Intermediate Shaft (Front)	1	
58236	Washer, 722.0 / 722.1 / 722.2 K-2 Hub To Intermediate Shaft	1	
58238	Washer, 722.0 Front Planet (Rear) (450)	1	
58238A	Washer, 722.1 / 722.2 Front Planet (Rear)	1	
58239	Shim, 722.1 / 722.2 Front Planet (Rear)	1	
58241	Needle Bearing, 722.1 / 722.2 Sun Gear Inner (3 Pieces)	1	
58241A	Needle Bearing, 722.0 Sun Gear Inner (1 Piece)	1	
58242	Spacer, 722.0 Snap Ring To B1 Drum	1	
58243	Shim, 722.1 / 722.2 2nd Planet To Sun Gear	1	
58244	Washer, 722.1 / 722.2 2nd Planet To Sun Gear	1	
58247	Washer, 722.0 / 722.1 / 722.2 Rear Sun Gear To Ball Bearing	1	
58250	Bearing, 722.0 / 722.1 / 722.2 Rear Planet (Rear)	1	007-981-3900
58251	Needle Bearing, 722.0 / 722.1 / 722.2 Rear Planet (Rear) 2 Pieces	1	
58263	Ball Bearing, 722.0 / 722.1 / 722.2 Output Shaft (Front)	1	
58268	Needle Bearing, 722.0 Rear Planet (Inner) (Front) 3/4" Long	1	
58268A	Needle Bearing, 722.0 Rear Planet (Inner) (Front) 1/2" Long	1	
58269	Bearing, 722.2 Intermediate Shaft (.890"ID)	1	
58269A	Bearing, 722.0 / 722.1 Intermediate Shaft (.675"ID)	1	
58270	Washer, 722.0 / 722.1 / 722.2 Speed-O Gear To Ball Bearing	1	
58271	Ball Bearing, 722.0 / 722.1 / 722.2 Output Shaft (Rear)	1	

PART #	GASKETS & RUBBER COMPONENTS	QTY.	REFERENCE #
58300	Gasket, 722.0 / 722.1 / 722. 2 Bottom Pan (Rubber)	1	115-271-1680

PART #	TECHNICAL MANUALS	QTY.	REFERENCE #
58400	Technical Manual, 722.0 / 722.1 / 722.2	1	83-7222TM

PART #	ELECTRICAL COMPONENTS	QTY.	REFERENCE #
58410	Neutral Switch, 722.0 / 722.1 / 722.2	1	
58434	Switch, 722.0 / 722.1 / 722.2 Kickdown	1	

© Whatever It Takes Transmission Parts. Inc.

PART #	HARD PARTS	QTY.	REFERENCE #
58509	Rear Pump Assembly, 722.0 / 722.1 / 722.2 (2 1/8" Steel Collar)	1	
58509A	Rear Pump Assembly, 722.0 / 722.1 / 722.2 (2 7/8" Steel Collar)	1	
58510	Pump Body, 722.1 (115-277-0420) Without Plate	1	116-270-0090
58510A	Pump Body, 722.0 / 722.2 (Cast # 1020) Without Plate	1	
58510B	Pump Body, 722.2 (010-277-0420) Without Plate	1	
58529	Shaft, 722.0 / 722.2 Stator (4 1/16" Long) 1.457"OD Surface Where Presses In Bell	1	
58529A	Shaft, 722.0 / 722.2 Stator (4 1/16" Long) 1.573"OD Surface Where Presses In Bell	1	
58529B	Shaft, 722.0 / 722.2 Stator (4 9/16" Long)	1	

PART #	PUMP COMPONENTS	QTY.	REFERENCE #
58543	Eccentric Wheel, 722.0 / 722.2 (Drives The Rear Pump)	1	
58544	Plate, 722.0 / 722.2 Pump (1 1/2" Center Hole With Splines)	1	
58544A	Plate, 722.1 Pump (1 1/4" Center Hole) No Splines	1	

PART #	HARD PARTS (Continued)	QTY.	REFERENCE #
58554	Drum, 722.0 Band With K-1 Clutch	1	
58554A	Drum, 722.1 / 722. 2 Band With K-1 Clutch	1	
58555	Drum, 722.0 Rear (Except 450)	1	
58555A	Drum, 722.0 Rear (450 Only)	1	
58555B	Drum, 722.1 / 722.2 Rear (3 1/2" Wide)	1	
58556	Drum, 722.1 / 722.2 Second Ring Gear & Band Drum	1	
58556A	Drum, 722.0 Band	1	
58564	Piston Kit, 722.0 / 722.1 / 722.2 K-1 Clutch	1	
58565	Piston Kit, 722.0 / 722.1 / 722. 2 K-2 Clutch (B-2 Drum)	1	
58575	Clutch Hub W/Shaft, 722.0 Hollow With Race (450)	1	
58575A	Clutch Hub W/Shaft, 722.1 / 722.2 Hollow W/Cam & Hub (1 1/8" Hub)	1	
58575B	Clutch Hub W/Shaft, 722.1 / 722.2 Hollow W/Cam & Hub (1 3/16" Hub)	1	
58575C	Clutch Hub W/Shaft, 722.1 / 722.2 Hollow W/Cam & Hub (1 5/16" Hub)	1	
58579	Hub, 722.0 / 722.1 / 722.2 B-2 Drum	1	
58582	Planet, 722.0 Front	1	
58582A	Planet, 722.1 / 722.2 Front (1 9/16"OD Hub Inside)	1	
58582B	Planet, 722.1 / 722.2 Front (1 3/4"OD Hub Inside)	1	
58584	Planet, 722.0 With Output Shaft (Uses 3/4" Long Bearing # 268)	1	
58584A	Planet, 722.1 / 722.2 With Output Shaft (Uses 1/2" Long Bearing # 268) Bearing # 268 Is Flush With The Top Of Hole	1	
58584B	Planet, 722.1 / 722.2 With Output Shaft (Uses 1/2" Bearing # 268) Bearing # 268 Sets 1/8" Below Surface	1	
58586	Planet, 722.1 / 722.2 Second (.160" Thick Hub)	1	
58586A	Planet, 722.1 / 722.2 Second (.133" Thick Hub)	1	
58592	Ring Gear, 722.0 / 722.1 / 722.2 Front & Rear Planet (1.140" Thick)	2	
58592A	Ring Gear, 722.0 / 722.1 / 722.2 Front & Rear Planet (1.220" Thick)	2	
58612	Sun Gear, 722.0 Front (450)	1	
58614	Sun Gear, 722.0 / 722.1 / 722.2 Rear	1	
58616	Sun Gear, 722.1 / 722.2 Intermediate	1	

PART #	SPRAGS & ONE WAY CLUTCHES	QTY.	REFERENCE #
58642	Sprag, 722.0 Freewheel Assembly	1	

PART #	HARD PARTS (Continued)	QTY.	REFERENCE #
58670	Input Shaft, 722.2 With Sun Gear (7 1/2" Long)	1	
58670A	Input Shaft, 722.1 With Sun Gear (6 1/2" Long)	1	
58670B	Input Shaft, 722.0 With Flange (7 3/16" Long) (450)	1	
58674	Shaft, 722.0 Intermediate With Hub (Except 450)	1	
58674A	Shaft, 722.0 Intermediate With 1 1/8" Hub (450)	1	
58674B	Shaft, 722.0 Intermediate With 1 1/4" Hub (470)	1	
58674C	Shaft, 722.1 / 722.2 Intermediate With Hub	1	
58680	Governor Assembly, 722.0 / 722.1 / 722.2	1	
58690	Park Gear, 722.0 / 722.1 / 722. 2	1	
58697	Oil Distributor Sleeve, 722.0 / 722.1 / 722.2	1	
58740A	Valve Body, 722.0 / 722.1 / 722.2 (100 270 3607 Ink #)	1	
58740B	Valve Body, 722.0 / 722.1 / 722.2 (114 270 5207 Ink #)	1	
58740C	Valve Body, 722.0 / 722.1 / 722.2 (115 270 6107 Ink #)	1	
58740D	Valve Body, 722.0 / 722.1 / 722.2 (116 270 2207 Ink #)	1	
58740E	Valve Body, 722.0 / 722.1 / 722.2 (123 270 0007 Ink #)	1	

© Whatever It Takes Transmission Parts. Inc.

58750	Bell Housing, 722.0 (Cast # 103) (450 Model)	1
58750A	Bell Housing, 722.0 (Cast # 103) (Except 450 Model)	1
58750B	Bell Housing, 722.1 / 722.2 (Cast #115)	1
58750C	Bell Housing, 722.1 / 722.2 (Cast #130)	1
58760	Case, 722.0 / 722.1 / 722.2 (Cast #) 1970-75	1
58760A	Case, 722.0 / 722.1 / 722.2 (Cast #) 1976-80	1
58765	Pan, 722.0 / 722.1 / 722.2	1
58770	Extention Housing, 722.0 / 722.1 / 722.2	1
58774	Housing, 722.0 / 722.1 / 722.2 Driven Speed-O Gear	1
58798	Nut, 722.0 / 722.1 / 722.2 Holds Yoke To Output Shaft	1
58841	Yoke, 722.0 / 722.1 / 722.2	1
58847	Gear, 722.0 / 722.1 / 722.2 Drive	1
58848	Gear, 722.0 / 722.1 / 722.2 Driven	1
58876	Snap Ring, 722.0 / 722.1 / 722.2 B-1 Front Clutch Drum (.097” Thick) (.195” Wide)	1
58876A	Snap Ring, 722.0 / 722.1 / 722.2 B-1 Drum Holds Pressure Plate In (.097” Thick) (.132” Wide)	1
58877	Snap Ring, 722.0 / 722.1 / 722.2 Holds K-1 Retainer To Drum	1
58878	Snap Ring, 722.0 / 722.1 / 722.2 Holds Pressure Plate To B-2 Drum	1
58879	Snap Ring, 722.0 / 722.1 / 722.2 Holds B-2 Hub To B-2 Drum	1
58880	Snap Ring, 722.1 / 722.2 Front Planet to K-2 Hub	1
58881	Snap Ring, 722.0 Holds Input Shaft To ring Gear	2
58881A	Snap Ring, 722.1 / 722.2 Holds Front Planet In B-3 Drum	1
58882	Snap Ring, 722.0 Holds Front Planet In B-3 Drum	1
58882A	Snap Ring, 722.1 / 722.2 Holds Front Ring Gear To Intermediate Planet	2
58883	Snap Ring, 722.0 B-2 Hub	1
58886	Snap Ring, 722.0 Holds Clutch To B1 Drum	1
58889	Snap Ring, 722.0 Holds Intermediate Shaft To Rear Ring Gear	2
58895	Snap Ring, 722.0 / 722.1 / 722.2 Holds Ball Bearing In Extention Housing	1
58896	Snap Ring, 722.0 / 722.1 / 722.2 Holds B-3 Servo Cover In	1
58897	Snap Ring, 722.0 / 722.1 / 722.2 Holds B-1 Servo Cover To Case	1
58898	Snap Ring, 722.0 / 722.1 / 722.2 Holds B-2 Servo Cover In	1
58900	Servo Assembly, 722.0 / 722.1 / 722.2 B-1 Band	1
58901	Spring, 722.0 / 722.1 / 722.2 B1 Servo	1
58902	Piston, 722.0 / 722.1 / 722.2 B1 Servo	2
58904	Cover, 722.0 / 722.1 / 722.2 B1 Servo	1
58905	Servo Assembly, 722.0 / 722.1 / 722.2 B-2 Band	1
58906	Spring, 722.0 / 722.1 / 722.2 B-2 Servo	1
58907	Piston, 722.0 / 722.1 / 722.2 B-2 Servo	1
58909	Cover, 722.0 / 722.1 / 722.2 B-2 Servo	1
58910	Servo Assembly, 722.0 / 722.1 / 722.2 B-3 Band	1
58911	Spring, 722.0 / 722.1 / 722.2 B-3 Servo	1
58912	Piston, 722.0 / 722.1 / 722.2 B-3 Servo	1
58914	Cover, 722.0 / 722.1 / 722.2 B-3 Servo	1
58916	Strut Assembly, 722.0 / 722.1 / 722.2 Band	1
58917	Apply Pin, 722.0 / 722.1 / 722.2 Servo	1
58920	Bolt, 722.0 / 722.1 / 722.2 Band Adjusting	1
58921	Band Guide, 722.0 / 722.1 / 722.2 Plastic (Cast #)	1
58926	Spring, 722.0 / 722.1 / 722.2 Accumulator	1
58927	Piston, 722.0 / 722.1 / 722.2 Accumulator	1
58964	Piston, 722.0 / 722.1 / 722.2 K-1 Clutch	1
58965	Piston, 722.0 / 722.1 / 722.2 K-2 Clutch (B-2 Drum)	1
58974	Spring, 722.0 / 722.1 / 722.2 K-1 Clutch Return	1
58975	Spring, 722.0 / 722.1 / 722.2 K-2 Clutch Return	1
58980	Retainer, 722.1 / 722.2 Bearing Input	1
58984	Retainer, 722.0 / 722.1 / 722.2 K-1 Clutch Spring	1
58985	Retainer, 722.0 / 722.1 / 722.2 K-2 Clutch Return Spring	1
58991	Linkage Assembly, 722.0 / 722.1 / 722.2 Internal	1
58995	Park Pawl Assembly, 722.0 / 722.1 / 722.2	1
58999	Oil Tubes, 722.0 / 722.1 / 722.2	1

© Whatever It Takes Transmission Parts. Inc.

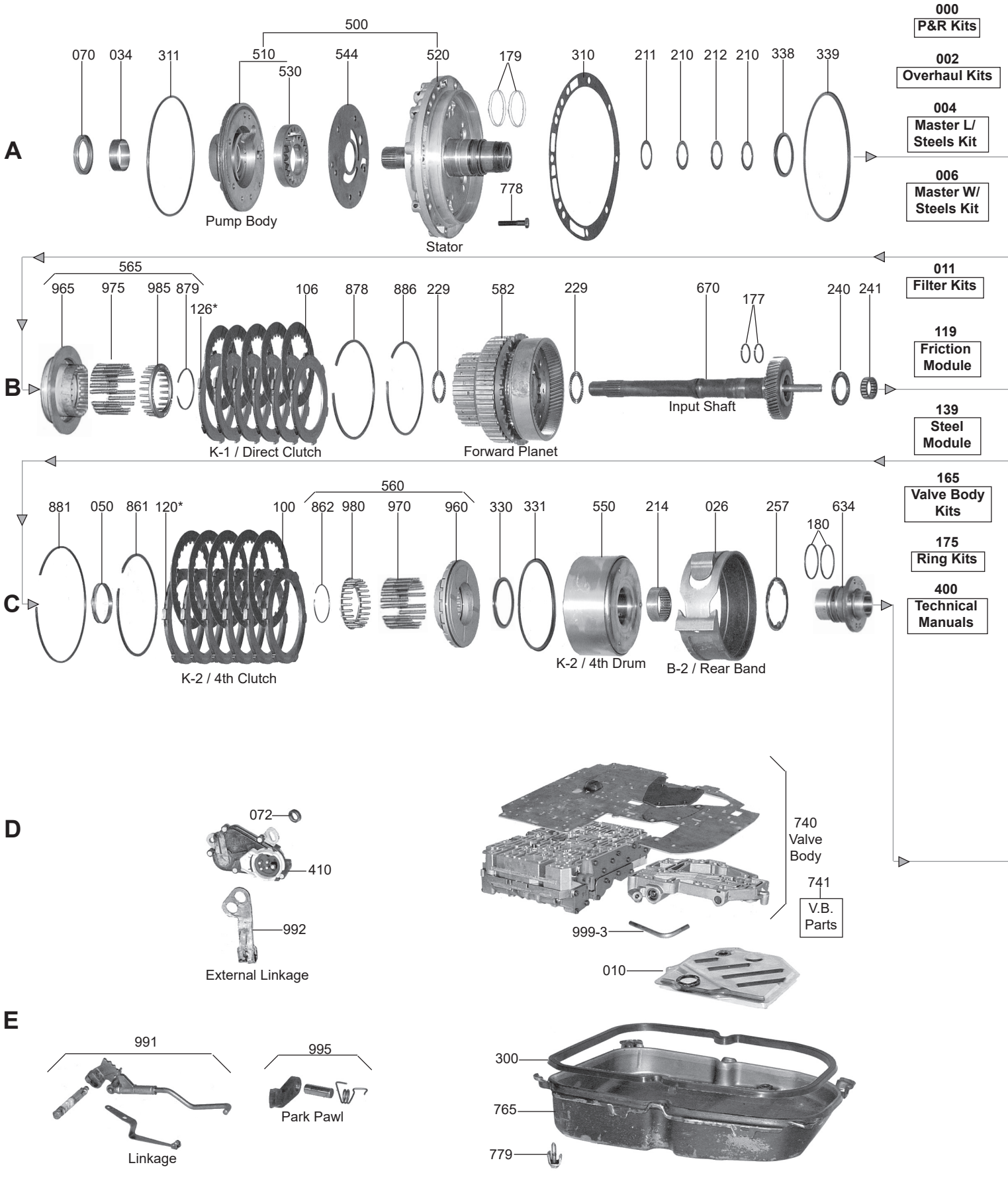

000 P&R Kits

002 Overhaul Kits

004 Master L/ Steels Kit

006 Master W/ Steels Kit

011 Filter Kits

119 Friction Module

139 Steel Module

165 Valve Body Kits

175 Ring Kits

400 Technical Manuals

MERCEDES

© Whatever It Takes Transmission Parts. Inc.

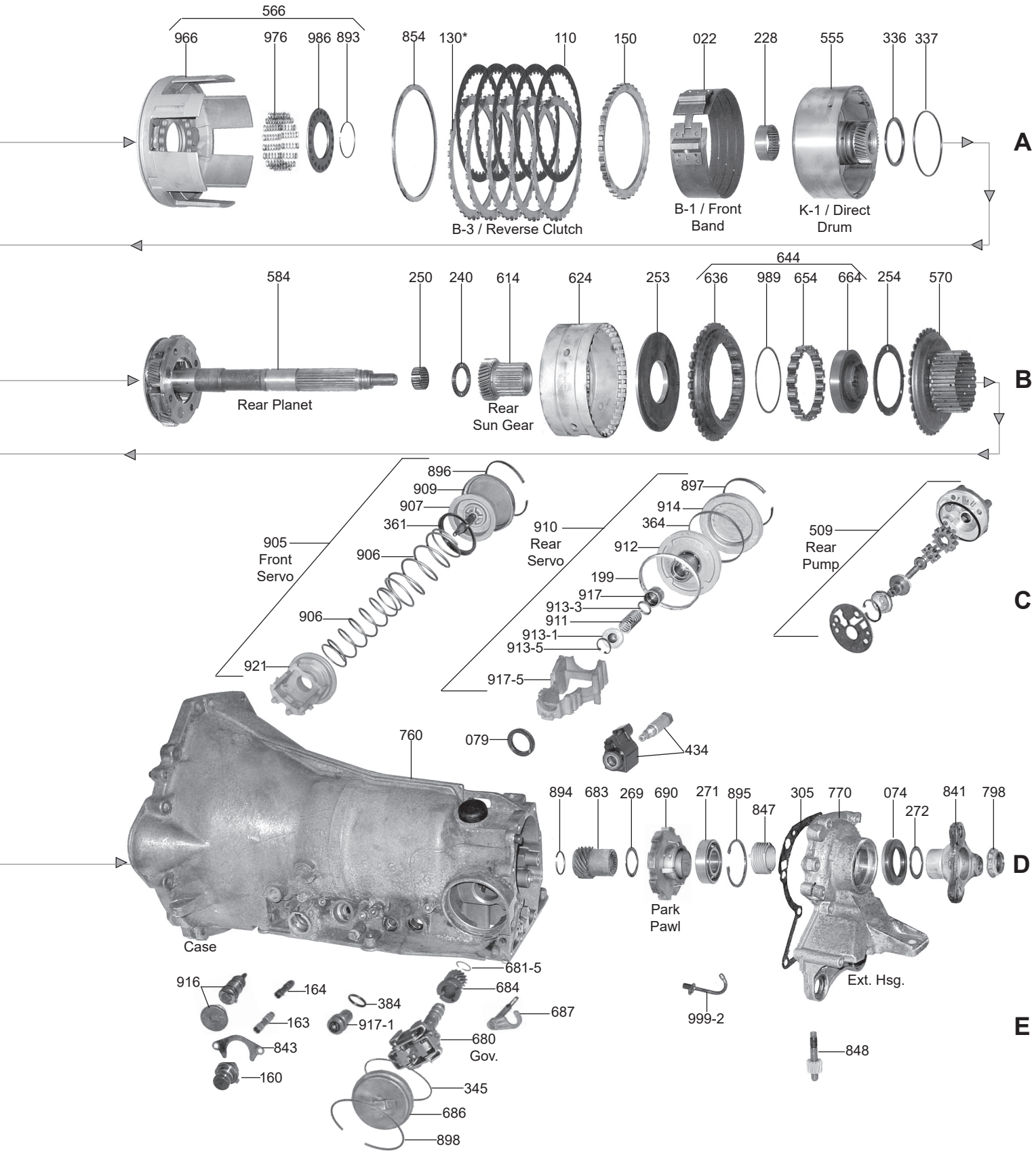

© Whatever It Takes Transmission Parts. Inc.

PART #	PAPER & RUBBER KIT	QTY.	REFERENCE #
68000A	Paper & Rubber Kit, 722.4 (Small Case) 1984-97	1	
68000B	Paper & Rubber Kit, 722.3 (Large Case) 1981-97	1	
68000C	Paper & Rubber Kit, 722.5 (5 Speed) 1990-97	1	

PART #	OVERHAUL KITS	QTY.	REFERENCE #
68002A	Overhaul Kit, 722.4 (Small Case) 1984-97	1	
68002B	Ovehaul Kit, 722.3 (Large Case) 1981-97	1	
68002C	Overhaul Kit, 722.5 (5 Speed) 1990-97	1	

PART #	MASTER L/STEEL KIT	QTY.	REFERENCE #
68004A	Master L/Steels Kit, 722.4 (Small Case) 1984-97	1	
68004B	Master L/Steels Kit, 722.3 (Large Case) 1981-97	1	
68004C	Master L/Steels Kit, 722.5 (5 Speed) 1990-97	1	

PART #	MASTER W/STEEL KIT	QTY.	REFERENCE #
68006A	Master W/Steels Kit, 722.4 (Small Case) 1984-97	1	
68006B	Master W/Steels Kit, 722.3 (Large Case) 1981-97	1	
68006C	Master W/Steels Kit, 722.5 (5 Speed) 1990-97	1	

PART #	FILTER	QTY.	REFERENCE #
68010A	Filter, 722.3/722.4 (190 & 380 Series) 1981-97	1	126-277-02-95
68010C	Filter, 722.5 (5 Speed) 1990-97	1	

PART #	FILTER KIT	QTY.	REFERENCE #
68011A	Filter Kit, 722.4 (Small Case) 1984-97	1	
68011B	Filter Kit, 722.3 (Large Case) 1981-97	1	
68011C	Filter Kit, 722.5 (5 Speed) 1990-97	1	

PART #	BANDS	QTY.	REFERENCE #
68022A	Band, 722.4 Front (Semi Flex) 1984-97	1	124-270-0062
68022B	Band, 722.3 Front (Semi Flex) 1981-97	1	126-270-1662
68022C	Band, 722.5 Front (Semi Flex) 1990-97	1	126-270-1862
68026A	Band, 722.4 Rear (Split)(5 3/8"OD)	1	201-270-1062
68026B	Band, 722.3 Rear (Split) (6 1/8"OD)	1	126-270-1562
68026C	Band, 722.5 Rear	1	126-270-2062

PART #	BUSHINGS	QTY.	REFERENCE #
68034A	Bearing, 722.4 Front Pump Body (Use 68209A) 1984-97	1	
68209A	Bearing, 722.4 Front Pump Body 1984-97	1	
68034B	Bushing, 722.3/722.5 Front Pump Body (1.690"ID)1981-97	1	23009
S68034BA	Bushing, 722.3/722.5 Front Pump Body (Unfinished)(Sonnax)(Pump Body Must Be Machined And Bushing Finished In Place)	1	
68050A	Bushing, 722.4 Supporting Disc 1984-97	1	
68050B	Bushing, 722.3 Supporting Disc 1981-97	1	

PART #	METAL CLAD SEALS	QTY.	REFERENCE #
68070A	Seal, 722.4 Front 1984-97	1	010-997-4547
68070B	Seal, 722.3 / 722.5 Front 1981-97	1	004-997-2847
68072B	Seal, 722.3/722.4/722.5 Linkage Shaft (.710"OD)(.469"ID) 1981-Up	1	
68074A	Seal, 722.3/722.4/722.5 Rear (2.450"OD) (1.525"ID) (OE# 012-997-8747) 1981-97	1	012-997-8747

PART #	FRICTION CLUTCH	QTY.	REFERENCE #
68100A	Friction, 722.4 4th Clutch (K2) .083" (4.25"OD) 36 Teeth 1984-97	3-5	123-272-0125
68100B	Friction, 722.3/722.5 4th Clutch (K2) .085" (4.800"OD) 24 Teeth 1981-97	4-5	126-272-0725
68102C	Friction, 722.5 Overdrive Clutch (BS) .085" (5.50"OD) 28 Teeth 1990-97	4	124-272-0025
68106A	Friction, 722.4 Direct Clutch (K1) .083" (4.675"OD) 40 Teeth 1984-97	3-5	123-272-0225
68106B	Friction, 722.3/722.5 Direct Clutch (K1) .083" (5.265"OD) 24 Teeth 1981-97	3-5	126-272-0625
68110A	Friction, 722.4 Reverse Clutch (B3) .081" (6.00"OD) 30 Teeth 1984-97	3-5	123-272-0325
68110B	Friction, 722.3/722.5 Reverse Clutch (B3) .081" (6.60"OD) 36 Teeth 1981-97	4-5	126-272-0925

MERCEDES

© Whatever It Takes Transmission Parts. Inc.

68116C	Friction, 722.5 Overrun Clutch (KS) .083" (4.180"OD) 22 Teeth 1990-97	4	124-272-0125
68119A	Friction Module, 722.4 1984-97	1	
68119B	Friction Module, 722.3 1981-97	1	
69119C	Friction Module, 722.5 (5 Speed) 1990-97	1	

PART #	STEEL CLUTCH	QTY.	REFERENCE #
68120A	Steel, 722.4 4th Clutch (K2) (.078") 6 Teeth (3.250"ID) 1984-97	4	
68120AA	Steel, 722.4 4th Clutch (K2) (.118") 6 Teeth (3.250"ID) 1984-97	4	
68120AB	Steel, 722.4 4th Clutch (K2) (.138") 6 Teeth (3.250"ID) 1984-97	4	
68120AC	Steel, 722.4 4th Clutch (K2) (.157") 6 Teeth (3.250"ID) 1984-97	4	
68120AD	Steel, 722.4 4th Clutch (K2) (.177") 6 Teeth (3.250"ID) 1984-97	4	
68120B	Steel, 722.3/722.5 4th Clutch (K2) (.078") 6 Teeth (3.464"ID) 1981-97	4	
68120BA	Steel, 722.3/722.5 4th Clutch (K2) (.118") 6 Teeth (3.464"ID) 1981-97	AR	
68120BB	Steel, 722.3/722.5 4th Clutch (K2) (.138") 6 Teeth (3.464"ID) 1981-97	AR	
68120BC	Steel, 722.3/722.5 4th Clutch (K2) (.177") 6 Teeth (3.464"ID) 1981-97	AR	
68120BD	Steel, 722.3/722.5 4th Clutch (K2) (.197") 6 Teeth (3.464"ID) 1981-97	AR	
68120BE	Steel, 722.3/722.5 4th Clutch (K2) (.217") 6 Teeth (3.464"ID) 1981-97	AR	
68122C	Steel, 722.5 Overdrive Clutch (BS) (.098") (8 Teeth) (4.786"ID) 1990-97	3-4	
68122CA	Steel, 722.5 Overdrive Clutch (BS) (.215") (8 Teeth) (4.786"ID) 1990-97	AR	
68126A	Steel, 722.4 Direct Clutch (K1) .078" (6 Teeth) 3.524"ID 1984-97	8	
68126AA	Steel, 722.4 Direct Clutch (K1) .118" (6 Teeth) 3.524"ID 1984-97	AR	
68126AB	Steel, 722.4 Direct Clutch (K1) .138" (6 Teeth) 3.524"ID 1984-97	AR	
68126AC	Steel, 722.4 Direct Clutch (K1) .157" (6 Teeth) 3.524"ID 1984-97	AR	
68126AD	Steel, 722.4 Direct Clutch (K1) .177" (6 Teeth) 3.524"ID 1984-97	AR	
68126B	Steel, 722.3/722.5 Direct Clutch (K1) (.078") 6 Teeth (4.094"ID) 1981-97	4	
68126BA	Steel, 722.3/722.5 Direct Clutch (K1) (.138") 6 Teeth (4.094"ID) 1981-97	AR	
68126BB	Steel, 722.3/722.5 Direct Clutch (K1) (.157") 6 Teeth (4.094"ID) 1981-97	AR	
68126BC	Steel, 722.3/722.5 Direct Clutch (K1) (.177") 6 Teeth (4.094"ID) 1981-97	AR	
68126BD	Steel, 722.3/722.5 Direct Clutch (K1) (.197") 6 Teeth (4.094"ID) 1981-97	AR	
68126BE	Steel, 722.3/722.5 Direct Clutch (K1) (.217") 6 Teeth (4.094"ID) 1981-97	AR	
68130A	Steel, 722.4 Reverse Clutch (B3) (.098") 36 Teeth (5.060"ID) 1984-97	3	201-272-2626
68130AA	Steel, 722.4 Reverse Clutch (B3) (.118") 36 Teeth (5.060"ID) 1984-97	AR	
68130AB	Steel, 722.4 Reverse Clutch (B3) (.138") 36 Teeth (5.060"ID) 1984-97	AR	
68130AC	Steel, 722.4 Reverse Clutch (B3) (.157") 36 Teeth (5.060"ID) 1984-97	AR	
68130B	Steel, 722.3/722.5 Reverse Clutch (B3) (.091") 36 Teeth (5.787"ID) 1981-97	4	
68130BA	Steel, 722.3/722.5 Reverse Clutch (B3) (.110") 36 Teeth (5.787"ID) 1981-97	AR	
68130BB	Steel, 722.3/722.5 Reverse Clutch (B3) (.130") 36 Teeth (5.787"ID) 1981-97	AR	
68130BC	Steel, 722.3/722.5 Reverse Clutch (B3) (.150") 36 Teeth (5.787"ID) 1981-97	AR	
68136C	Steel, 722.5 Overrun Clutch (KS) (.078") 28 Teeth (3.504"ID) 1990-97	4	
68136CA	Steel, 722.5 Overrun Clutch (KS) (.138") 28 Teeth (3.504"ID) 1990-97	AR	
68139AA	Steel Module, 722.4 1984-97 (Fits Model # 722.400/408/414/423)	1	71753
68139AB	Steel Module, 722.4 1984-97 (Fits Model # 744.409/410/413/416/418/424/429/433/435)	1	
68139AC	Steel Module, 722.4 1984-97 (Fits Model # 722.403)	1	
68139B	Steel Module, 722.3 1981-97 (Fits Model # 722.301/303/304/310/312/315/317/319/329/321/342/351/355/358/359/361/367/369)	1	
68139BA	Steel Module, 722.3 1981-97 (Fits Model # 722.311/313/323/350/353/362/364/365/370)	1	
68139BB	Steel Module, 722.3 1981-97 (Fits Model # 722.334/354/366)	1	
68139C	Steel Module, 722.5 1990-97 (Fits Model # 722.500/502/507/508)	1	

PART #	CLUTCH PRESSURE PLATES	QTY.	REFERENCE #
68150A	Pressure Plate, 722.4 Reverse Clutch (B3) 1984-97	1	

PART #	MODULATORS	QTY.	REFERENCE #
68160A	Modulator, 722.3/722.4/722.5 (White Top) 1981-97	1	
68160AB	Modulator, 722.3/722.4/722.5 (Red Top) 1981-97	1	
68160AC	Modulator, 722.3/722.4/722.5 (Green Top) 1981-97	1	
68160AD	Modulator, 722.3/722.4/722.5 (Brown Top) 1981-97	1	
68160AE	Modulator, 722.3/722.4/722.5 (Black Top) 1981-97	1	
68163A	Valve, 722.4 Under Modulator 1984-97	1	
68164A	Pin, 722.4 Under Modulator Valve 1984-97	1	
68164B	Pin, 722.3 Under Modulator Valve 1981-97	1	

PART #	VALVE BODY KITS	QTY.	REFERENCE #
S68165D	Valve Body Kit, 722.3/722.4 (Diesel) 1981-97 (Superior)	1	
S68165G	Valve Body Kit, 722.3/722.4 1981-97 (Superior)	1	

© Whatever It Takes Transmission Parts. Inc.

PART #	OIL SEALING RINGS	QTY.	REFERENCE #
68175A	Ring Kit, 722.4 1984-97	1	
68175B	Ring Kit, 722.3 1981-97	1	
68175BA	Ring Kit, 722.3/722.4 Accumulator Rings Only 1981-97	1	
68177AT	Ring, 722.4 Input Sahft (Teflon) 1984-97	2	
68177BT	Ring, 722.3 Input Shaft (Teflon) 1981-97	1	
68180AT	Ring, 722.3/722.4 4th Drum To Support (Teflon) 1981-97	2	

PART #	WASHERS & BEARINGS	QTY.	REFERENCE #
68209A	Bearing, 722.4 Front Pump Body 1984-97	1	
68210A	Race, 722.4 Stator To K1 Drum (Bearing #211 To Shim # 212) 1984-97	2	
68210AA	Shim, 722.4 Stator (Shim # 212 To K1 Drum) (Use 68212A)	1	
68210B	Bearing, 722.3/722.5 Stator To K1 Drum (Race #211 To Race # 212) 1981-97	1	
68210BA	Shim, 722.3/722.5 Stator (Race #212 To K1 Drum)	1	
68211A	Bearing, 722.4 Stator To K1 Drum 1984-97	1	
68211B	Bearing, 722.3 Stator To Bearing #210 (1.539"ID Where Race Sets On Stator) 1981-97	1	
68211BA	Cup Race, 722.3/722.5 Stator To Bearing #210 (1.589"ID Where Race Sets On Stator)	1	
68211BB	Flat Race, 722.3 Stator To Bearing #210 (Not Cupped)	1	
68212A	Spacer, 722.4 Stator Race #210 To Shim #210 1984-97	1	
68212B	Spacer, 722.3/722.5 Stator Bearing #210 To Shim #210 1981-97	1	
68216C	Shim, 722.5 Overdrive Planet (Front) 1990-97	1	
68217C	Bearing, 722.5 Overdrive Planet (Both Sides) 1990-97	2	
68218C	Shim, 722.5 Overdrive Planet (Rear) 1990-97	1	
68228A	Caged Bearing, 722.4 K1 Drum (Direct Clutch Drum) 1984-97	1	
68228B	Caged Bearing, 722.3 K1 Drum (Direct Clutch Drum) 1981-97	1	
68229A	Bearing, 722.4 Sun Gear Drum To Front Planet 1984-97	2	
68229B	Bearing, 722.3/722.5 Sun Gear Drum To Front Planet 1981-97	2	
68240A	Bearing, 722.4 Input Shaft To Rear Planet & Rear Planet To Sun Gear 1984-97	2	
68240B	Bearing, 722.3/722.5 Input Shaft To Rear Planet & Rear Planet To Sun Gear 1981-97	2	
68241A	Roller Bearing, 722.4 Input Shaft To Rear Planet 1984-97	1	
68241B	Roller Bearing, 722.3/722.5 Input Shaft To Rear Planet 1981-97	1	
68250A	Roller Bearing, 722.4 (Split) Output Shaft To Rear Sun Gear 1984-97	1	
68250B	Roller Bearing, 722.3/722.5 (Split) Output Shaft To Rear Sun Gear 1981-97	1	
68253A	Shim, 722.4 Aluminum Support To Sun Gear Support 1984-97	1	
68253B	Shim, 722.3 Aluminum Support To Sun Gear Support 1981-97	1	
68253C	Shim, 722.5 Aluminum Support To Sun Gear Support 1990-97	1	
68254A	Washer, 722.4 Roller Clutch To K2 Hub (3 Tab)(Metal)(3.150"OD) 1984-97	1	
68254B	Washer, 722.3 Roller Clutch To K2 Hub (3 Tab)(Plastic)(3.895"OD) 1984-97	1	
68256A	Caged Bearing, 722.4 K2 Drum (4th Clutch Drum) 1984-97	1	
68256B	Caged Bearing, 722.3 K2 Drum (4th Clutch Drum) 1981-97	1	
68257A	Washer, 722.4 K2 Drum To Rear Support (1 Tab For Support) 1984-97	1	
68257B	Washer, 722.3 K2 Drum Rear 1981-97	1	
68257C	Washer, 722.5 K2 Drum Rear 1990-97	1	
68269A	Spacer, 722.4 Under Governor Drive Gear 1984-97	1	
68269AA	Shim, 722.4 Governor Drive Gear To Park Gear 1984-97	1	
68271A	Ball Bearing, 722.3/722.4 Extension Housing (Cast # 6206) 1981-97	1	
68271C	Ball Bearing, 722.5 Extension Housing 1990-97	1	
68272A	Shim, 722.4 Extension Housing Bearing To Yoke 1984-97	1	
68272B	Shim, 722.3/722.5 Extension Housing Bearing To Yoke 1981-97	1	

PART #	GASKETS & RUBBER COMPONENTS	QTY.	REFERENCE #
68300A	Gasket, 722.4 Bottom Pan 1984-97	1	123-271-0280
68300B	Gasket, 722.3/722.5 Bottom Pan 1981-97	1	126-271-0280
68305A	Gasket, 722.4 Extension Housing	1	
68305B	Gasket, 722.3 Extension Housing 1981-97 (OE # 123-271-0580)	1	
68305BA	Gasket, 722.3 Extension Housing 1981-97 (OE # 124-271-0280)	1	
68310A	Gasket, 722.4 Pump 1984-97	1	
68310B	Gasket, 722.3 Pump 1981-97	1	
68311A	O-Ring, 722.4 Pump 1984-97	1	
68311B	O-Ring, 722.3 Pump 1981-97	1	

PART #	TECHNICAL MANUALS	QTY.	REFERENCE #
68400A	Technical Manual, 722.3/722.4 (4 Speed) 1981-95	1	83-7224TM
68400C	Technical Manual, 722.5 (5 Speed) 1990-94	1	
68401A	Tech Manual On CD, 722.3/722.4 (4 Speed) 1981-95	1	

MERCEDES

© Whatever It Takes Transmission Parts. Inc.

PART #	ELECTRICAL COMPONENTS	QTY.	REFERENCE #
68410A	Switch, 722.3/722.4/722.5 Starter Lock Out (Neutral) 1981-97	1	
68414B	Switch, 722.3/722.5 Overload Protection 1981-97	1	
68434A	Solenoid, 722.3/722.4/722.5 Kickdown 1981-97 (Except 1994-97 S320 & SI320)	1	
68434C	Solenoid, 722.5 Kickdown (S320 & SI320) 1994-97	1	
68436A	Sensor, 722.3/722.4/722.5 Vehicle Speed Sensor (VSS) 1981-97	1	

PART #	HARD PARTS	QTY.	REFERENCE #
68500A	Pump, 722.4 Front 1984-97	1	
68500B	Pump, 722.3 Front (1.535"OD Where Cup Race # 211 Sets) 1981-97	1	
68500BA	Pump, 722.3/722.5 Front (1.585"OD Where Cup Race # 211 Sets) 1981-97	1	
68500BB	Pump, 722.3 Front (1.645"OD Where Flat Race # 211 Sets) 1981-97	1	
68509A	Pump, 722.4/722.5 Rear 1984-97	1	
68509B	Pump, 722.3 Rear 1981-97	1	
68510A	Pump Body, 722.4 Front (Needle Bearing Type) 1984-97	1	1232700097
68510B	Pump Body, 722.3/722.5 (Bushing Type) (Cast # 126) 1981-97	1	
68510C	Pump Body, 722.3/722.5 (Bushing Type) (Cast # 140) 1990-97	1	
68520A	Stator, 722.4 Front Pump (Has No Bushing In Raer For Input Shaft) (Can Use 68520AA With A 68670AA)	1	
68520AA	Stator, 722.4 Front Pump (Has A Bushing In Rear For Input Shaft)(Can Use A 68520A With A 68670A)	1	
68520B	Stator, 722.3/722.5 Front Pump (1.535"OD Where Cup Race # 211 Sets) 1981-97	1	
68520BA	Stator, 722.3/722.5 Front Pump (1.585"OD Where Cup Race # 211 Sets) 1981-97	1	
68520BB	Stator, 722.3/722.5 Front Pump (1.645"OD Where Cup Race #211 Sets) 1981-97	1	
68544A	Plate, 722.4 Front Pump 1984-97	1	
68544B	Plate, 722.3/722.5 Front Pump 1981-97	1	
68550A	Drum, 722.4 4th Clutch (K2) (3 Clutch) 1984-97	1	
68550AA	Drum, 722.4 4th Clutch (K2) (4 Clutch) 1984-97	1	
68550B	Drum, 722.3 4th Clutch (K2) Stamped Steel (Uses A Washer # 257 On Back) W/Needle Bearing In Bore) 1981-9	1	
68550BA	Drum, 722.3 4th Clutch (K2) Cast Steel (With Ball Bearing On Back Of Drum) (W/Needle Bearing In Bore) 1981-	1	
68550BB	Drum, 722.4 4th Clutch)K2) Cast Steel (Uses A Washer # 257 On Back) (W/Needle Bearing In Bore) 1984-97	1	
68555A	Drum, 722.4 Direct (K1) With 26 Teeth Sun Gear 1984-97	1	
68555BA	Drum, 722.3 Direct (K1) Clutch (With 26 Teeth Sun Gear) 1981-97	1	
68555BC	Drum, 722.3 Direct (K1) Clutch (With 34 Teeth Sun Gear) 1981-97 (Uses A 4 1/2"OD Piston)	1	
68555BD	Drum, 722.3 Direct (K1) Clutch (With 34 Teeth Sun Gear) 1981-97 (Uses A 5"OD Piston)	1	
68560A	Piston Kit, 722.4 4th Clutch (K2) 1984-97	1	
68565A	Piston Kit, 722.4 Direct (K1) Clutch 1984-97	1	
68565B	Piston Kit, 722.3 Direct (K1) Clutch (4 1/2"OD Piston) 1981-97	1	
68565BD	Piston Kit, 722.3 Direct (K1) Clutch (5"OD Piston) 1981-97	1	
68566A	Piston Kit, 722.4 Reverse Clutch (B3) 1984-97	1	
68566B	Piston Kit, 722.3 Reverse Clutch (B3) 1981-97	1	
68570A	Clutch Hub, 722.4 4th Clutch (K2) 1984-97	1	
68570B	Clutch Hub, 722.3 4th Clutch (K2) 1981-97	1	
68582A	Planet, 722.4 Front 1984-97	1	2012700243
68582B	Planet, 722.3 Front (Input Shaft Has 50 Teeth Sun Gear) 1981-97	1	
68582BA	Planet, 722.3 Front (Input Shaft Has 46 Teeth Sun Gear) 1981-97	1	
68584A	Planet, 722.4 Rear With Output Shaft 1984-97	1	
68584B	Planet, 722.3 Rear With Output Shaft 1981-97	1	
68614A	Sun Gear, 722.4 Rear 1984-97	1	
68614B	Sun Gear, 722.3 Rear 1981-97	1	
68624A	Aluminum Support, 722.4 Front & Rear Planet 1984-97	1	
68624B	Aluminum Support, 722.3 Front & Rear Planet 1981-97	1	
68634A	Support, 722.4 With Rings 1984-97	1	123-272-0645
68634B	Support, 722.3 With Rings (2.732"OD Hub) 1981-97	1	
68634BA	Support, 722.3 With Rings (2.915"OD Hub) 1981-97	1	
68636A	Disk, 722.4 Supporting 1984-97	1	

PART #	SPRAGS & ONE WAY CLUTCHES	QTY.	REFERENCE #
68644A	Sprag Assembly, 722.4 (Roller Clutch Assembly) 1984-97	1	
68644AA	Sprag Assembly, 722.4 (With K2 Hub On Top With Ring) 1984-97	1	
68644B	Sprag Assembly, 722.3 (With K2 Hub On Top And No Ring On Roller) 1981-97	1	
68644BA	Sprag Assembly, 722.3 (With Out K2 Hub) 1981-97	1	
68644BB	Sprag Assembly, 722.3 (With K2 Hub On Top With Ring On Roller) 1981-97	1	
68654A	Sprag, 722.4 (F Clutch) 1984-97	1	

© Whatever It Takes Transmission Parts. Inc.

PART #	HARD PARTS (Continued)	QTY.	REFERENCE #
68664A	Inner Race, 722.4 (F Clutch) 1984-97	1	
68670A	Input Shaft, 722.4 With Sun Gear (Fits The Stator With No Bushing) 1984-97	1	
68670AA	Input Shaft, 722.4 With Sun Gear (Fits The Stator With Bushing)	1	
68670B	Input Shaft, 722.3 (With 50 Teeth Sun Gear) 1981-97	1	
68670BA	Input Shaft, 722.3 (With 46 Teeth Sun Gear) 1981-97	1	
68680A	Governor, 722.4 (With Plastic Gear) Used In Units With Rear Pump	1	
68680AA	Governor, 722.4 / 722.5 (With Plastic Gear) Used In Units Without Rear Pump	1	
68680B	Governor, 722.3 (With Steel Gear) Used In Units With Rear Pump	1	
68680BA	Governor, 722.3 (With Steel Gear) Used In Units Without Rear Pump	1	
68683A	Gear, 722.4 Governor Drive (On Output Shaft) 1984-97	1	
68683B	Gear, 722.3 Governor Drive (On Output Shaft) 1981-97	1	
68684A	Gear, 722.4 Governor Driven (Goes On Governor) (Plastic) 1984-97	1	
68684B	Gear, 722.3 Governor Driven (Goes On Governor) (Metal) 1981-97	1	
68686A	Cover, 722.4 Governor 1984-97	1	
68687A	Retainer, 722.4 Governor (Lock Ring) 1984-97	1	
68687B	Retainer, 722.3 Governor Swivel Axial 1981-97	1	
68690A	Gear, 722.4 Parking With Plastic Speed-O Gear 1984-97	1	
68690B	Gear, 722.3 Parking With Plastic Speed-O Gear 1981-97	1	
68690BA	Gear, 722.3 Parking (2 Holes) With Electronic Pick-Up 1981-97	1	
68690BB	Gear, 722.3 Parking (4 Holes) With Electronic Pick-Up 1981-97	1	
68740AA	Valve Body, 722.4 (Ink #'s Are 124 270 2207 Or 124 270 5715) 1984-97	1	
68740AB	Valve Body, 722.4 (Ink #'s Are 201 270 3115) 1984-97	1	
68740AC	Valve Body, 722.4 (Ink #'s Are 201 270 5107	1	
68740BA	Valve Body, 722.3 (Ink #'s Are 107 270 0807) 1981-97	1	
68740BB	Valve Body, 722.3 (Ink #'s Are 126 270 5207) 1981-97	1	
68740BC	Valve Body, 722.3 (Ink #'s Are 126 270 7315 or 107 270 3307 or 129 270 0707) 1981-97	1	
68740BD	Valve Body, 722.3 (Ink #'s Are 126 270 3682)	1	
68760A	Case, 722.4 (Starter At 3:00) 1984-97	1	
68760B	Case, 722.3 (Starter At 9:30) 1981-97	1	
68760BA	Case, 722.3 (Starter At 3:00 & 9:00) 1981-97	1	
68760BB	Case, 722.3 (Starter At 3:00 Only) 1981-97	1	
68765A	Pan, 722.4 Bottom 1984-97	1	
68765B	Pan, 722.3 Bottom 1981-97	1	
68770A	Extension Housing, 722.4 (Cast # 201-271-0001) 1984-97	1	
68770B	Extension Housing, 722.3 (Cast # 124-271-0801) 1981-97	1	
68770BA	Extension Housing, 722.3 (Cast # 126-271-1201) 1981-97	1	
68770BB	Extension Housing, 722.3 (Cast # 107-271-0501) 1981-97	1	
68770BC	Extension Housing, 722.3 (Cast # 123-271-0701) 1981-97	1	
68770BD	Extension Housing, 722.3 (Cast # 123-271-1301) 1981-97	1	
68798A	Nut, 722.3/722.4 Output Shaft Yoke 1981-97	1	
68843A	Bracket, 722.3/722.4 Modulator 1981-97	1	
68841A	Yoke, 722.3/722.4 Output Shaft 1981-97	1	
68847A	Gear, 722.3/722.4 Speed-O Drive (15 Teeth Metal) 1981-97	1	
68847B	Gear, 722.3/722.4 Speed-O Drive (15 Teeth Plastic) 1981-97	1	
68848A	Gear, 722.3/722.4 Driven Speed-O 1981-97	1	
68854A	Cushion, 722.4 Reverse Clutch (B3) 1984-97	1	
68854B	Cushion, 722.3 Reverse Clutch (B3) 1981-97	1	
68861A	Snap Ring, 722.4 Holds 4th Clutch In Drum 1984-97	1	
68861B	Snap Ring, 722.3 Holds 4th Clutch In Drum 1981-97	1	
68862A	Snap Ring, 722.4 Holds 4th Clutch Retainer In Drum 1984-97	1	
68862B	Snap Ring, 722.3 Holds 4th Clutch Retainer In Drum 1981-97	1	
68878A	Snap Ring, 722.4 Holds Direct Clutch In Drum 1984-97	1	
68878B	Snap Ring, 722.3 Holds Direct Clutch In Drum 1981-97	1	
68879A	Snap Ring, 722.4 Holds Direct Clutch Retainer In Drum 1984-97	1	
68879B	Snap Ring, 722.3 Holds Direct Clutch Retainer In Drum 1981-97	1	
68881A	Snap Ring, 722.4 Holds 4th Clutch Hub To Aluminum Support 1984-97	1	
68881B	Snap Ring, 722.3 Holds 4th Clutch Hub To Aluminum Support 1981-97	1	
68886A	Snap Ring, 722.4 Holds Front Planet To Aluminum Support 1984-97	1	
68886B	Snap Ring, 722.3 Holds Front Planet To Aluminum Support 1981-97	1	
68893A	Snap Ring, 722.4 Holds Reverse Clutch Retainer In 1984-97	1	
68893B	Snap Ring, 722.3 Holds Reverse Clutch Retainer In 1981-97	1	
68894A	Snap Ring, 722.3/722.4 Holds Governor Drive Gear To Output Shaft 1981-97	1	
68895A	Snap Ring, 722.4 Extension Housing To Bearing 1984-97	1	
68895B	Snap Ring, 722.3 Extension Housing To Bearing 1981-97	1	
68896A	Snap Ring, 722.4 Holds Front Servo In 1984-97	1	
68896B	Snap Ring, 722.3 Holds Front Servo In 1981-97	1	
68897A	Snap Ring, 722.4 Holds Rear Servo In 1984-97	1	
68897B	Snap Ring, 722.3 Holds Rear Servo In 1981-97	1	

© Whatever It Takes Transmission Parts. Inc.

68898A	Snap Ring, 722.3/722.4 Holds Governor Cover On 1981-97	1	
68905A	Servo Assembly, 722.4 Front (Piston Cast # 123270038) 1984-97	1	
68905AA	Servo Assembly, 722.4 Front (Piston Cast # 1232770338) 1984-97	1	
68905AB	Servo Assembly, 722.4 Front (Piston Cast # 1232770038)	1	
68905B	Servo Assembly, 722.3 Front (Piston Cast # 126277038)	1	
68906A	Spring, 722.4 Front Servo Return 1984-97	1	
68906B	Spring, 722.3 Front Servo Return 1981-97	1	
68907A	Piston, 722.4 Front Servo 1984-97	1	
68907B	Piston, 722.3 Front Servo 1981-97	1	
68909A	Cover, 722.4 Front Servo 1984-97	1	
68909B	Cover, 722.3 Front Servo 1981-97	1	
68910A	Servo Assembly, 722.4 Rear 1984-97	1	
68910B	Servo Assembly, 722.3 Rear 1981-97	1	
68912A	Piston, 722.4 Rear Servo (2.950”OD) 1984-97	1	
68912B	Piston, 722.3 Rear Servo (3.460”OD) 1981-97	1	107-270-0432
68913A	Pin, 722.4 Rear Servo 1984-97	1	
68913B	Pin, 722.3 Rear Servo 1981-97	1	
68914A	Cover, 722.4 Rear Servo 1984-97	1	
68914B	Cover, 722.3 Rear Servo 1981-97	1	
68916A	Strut Assembly, 722.4 Front Band 1984-97	1	
68916B	Strut Assembly, 722.3 Front Band 1981-97	1	
68917A	Strut Assembly, 722.4 Rear Band 1984-97	1	
68917B	Strut Assemlby, 722.3 Rear Band 1981-97	1	
68921A	Guide, 722.4 Front Servo (Cast # 1232770340M) 1984-97	1	
68921AA	Guide, 722.4 Front Servo (Cast # 1232770840M) 1984-97	1	
68921B	Guide, 722.3 Front Servo 1981-97	1	
68958A	Tube, 722.4 Valve Body To Case 1984-97	1	
68958B	Tube, 722.3 Valve Body To Case 1981-97	1	
68960A	Piston, 722.4 K2 Clutch 1984-97	1	
68960B	Piston, 722.3 K2 Clutch 1981-97	1	
68965A	Piston, 722.4 Direct (K1) Clutch 1984-97	1	
68965B	Piston, 722.3 Direct (K1) Clutch (4 1/2”OD) 1981-97	1	
68965BD	Piston, 722.3 Direct (K1) Clutch (5”OD) 1981-97	1	
68966A	Piston, 722.4 Reverse Clutch (B3) 1984-97	1	
68966B	Piston, 722.3 Reverse Clutch (B3) 1981-97	1	
68970A	Spring, 722.4 4th Clutch Return 1984-97	1	
68970B	Spring, 722.3 4th Clutch Return 1981-97	1	
68975A	Spring, 722.4 Direct Clutch Return 1984-97	1	
68975B	Spring, 722.3 Direct Clutch Return 1981-97	1	
68976A	Spring, 722.4 Reverse Clutch Return 1984-97	1	
68976B	Spring, 722.3 Reverse Clutch Return 1981-97	1	
68980A	Retainer, 722.4 4th Clutch Spring 1984-97	1	
68980B	Retainer, 722.3 4th Clutch Spring 1981-97	1	
68985A	Retainer, 722.4 Direct Clutch Spring 1984-97	1	
68985B	Retainer, 722.3 Direct Clutch Spring 1981-97	1	
68986A	Retainer, 722.4 Reverse Clutch Spring 1984-97	1	
68986B	Retainer, 722.3 Reverse Clutch Spring 1981-97	1	
68989A	Retaining Ring, 722.4 (F Clutch Sprag) 1984-97	1	
68991A	Linkage Assembly, 722.4 Internal 1984-97	1	
68991B	Linkage Assembly, 722.3 Internal 1981-97	1	
68992A	Shift Lever, 722.4 External 1984-97	1	
68992B	Shift Lever, 722.3 External 1981-97	1	
68995A	Park Pawl Assembly, 722.4 1984-97	1	
68995B	Park Pawl Assembly, 722.3 1981-97	1	
68999A	Oil Tube, 722.4 Governor Gear Lube 1984-97	1	
68999B	Oil Tube, 722.3 Governor Gear Lube 1981-97	1	

© Whatever It Takes Transmission Parts. Inc.

002 Overhaul Kit
004 Master L/Steels Kit
006 Master W/Steels Kit
400 Technical Manuals

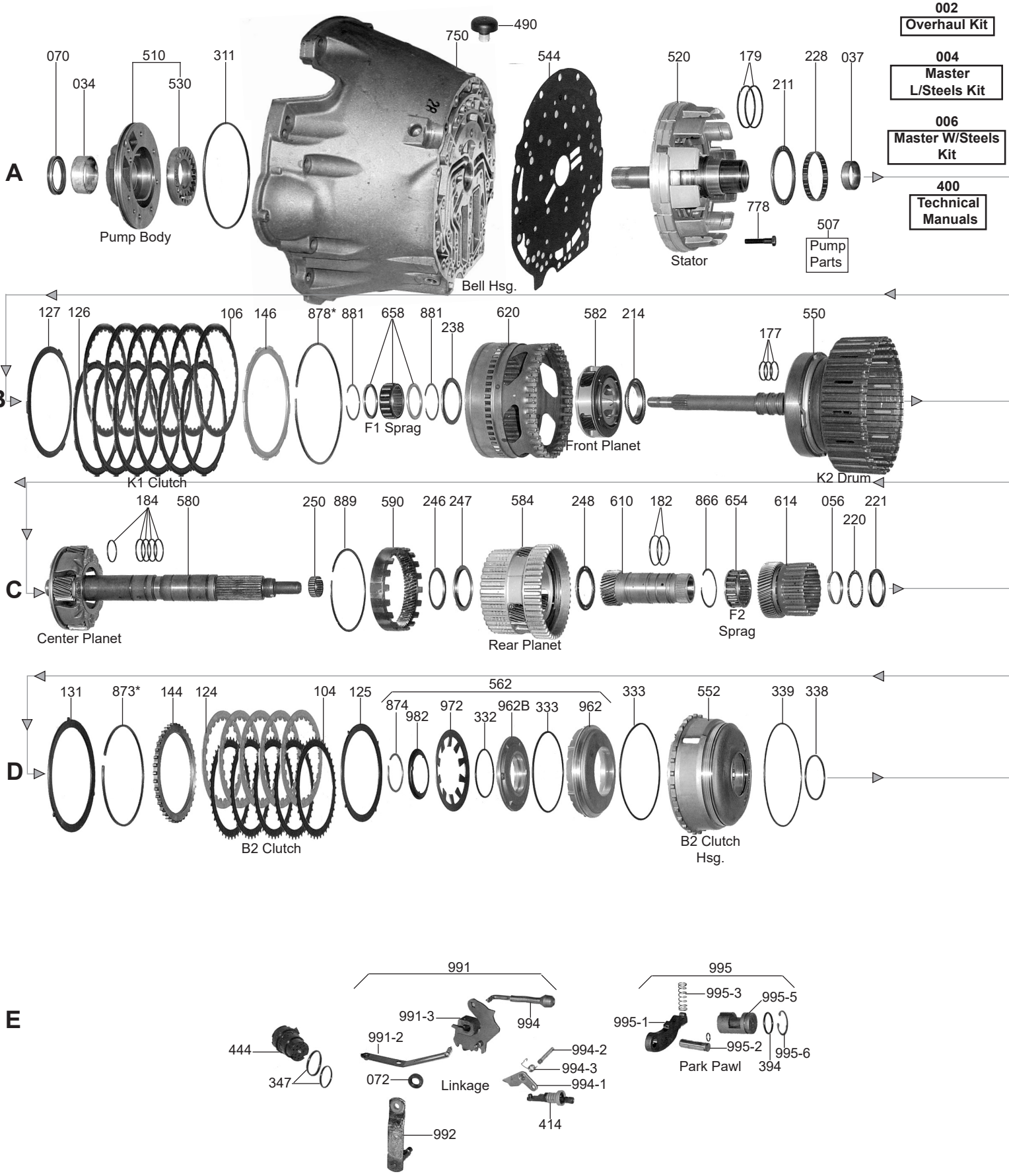

MERCEDES

© Whatever It Takes Transmission Parts. Inc.

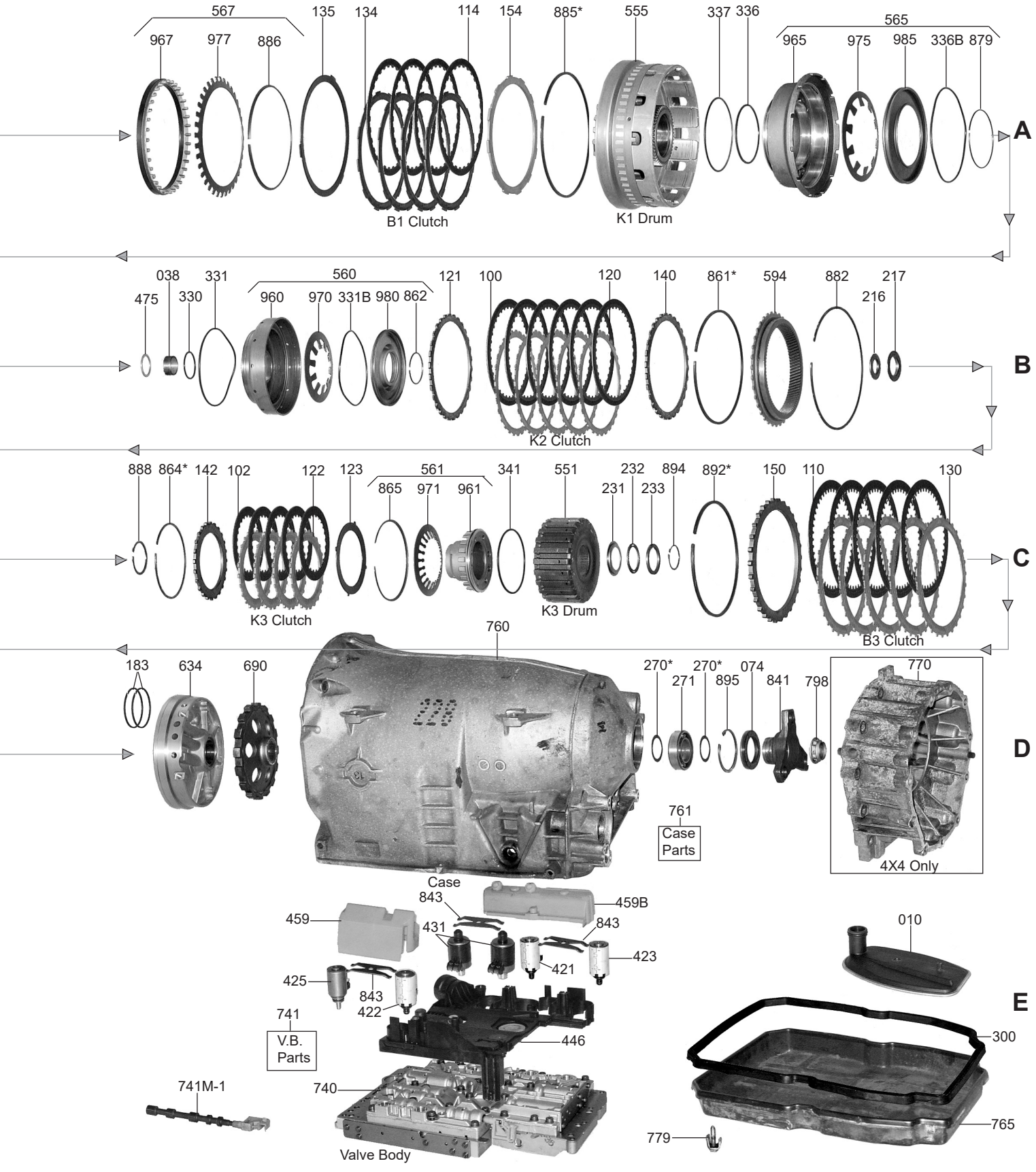

MERCEDES

© Whatever It Takes Transmission Parts. Inc.

PART #	OVERHAUL KIT	QTY	REFERENCE #
78002A	Overhaul Kit, 722.6 1996-Up (For B1 Bonded Piston Sell 78967A Or 78967C)	1	

PART #	MASTER L/STEELS KIT	QTY	REFERENCE #
78004A	Master L/Steels Kit, 722.6 1996-01 (With Large ID K2 Clutch)(Fits 4 Gear Rear Planet) (With Double Sided Friction)(For B1 Bonded Piston Sell 78967A)	1	
78004AA	Master L/Steels Kit, 722.6 1996-01 (With Small ID K2 Clutch)(Fits 3 Gear Rear Planet) (With Double Sided Frictions)(For B1 Bonded Pistons Sell 78967A)	1	
78004C	Master L/Steels Kit, 722.6 (Mercedes) 2002-Up (With Six 78114C & Six 78134C B1 Single Sided Frictions)(With Large ID K2 Clutch, Fits A 4 Gear Rear Planet)(For B1 Bonded Piston Sell # 78967C)	1	
78004CA	Master L/Steels Kit, 722.6 (Chrysler) 2002-Up (With Ten 78114C & Ten 78134C B1 Single Sided Frictions)(With Large ID K2 Clutch, Fits A 4 Gear Rear Planet)(For B1 Bonded Pistons Sell # 78967C)	1	
78004CAA	Master L/Steels Kit, 722.6 2002-Up (With Small ID K2 Clutch)(Fits 3 Gear Rear Planet) (With Single Sided Frictions)(For B1 Bonded Sell 78967C)(Fits W5A330 Sprinter)	1	
78004CB	Master L/Steels Kit, NAG1 2006-Up Chrysler With 5.7L/6.1L Hemi (With Single Sided Frictions)(For B1 Bonded Piston Sell 78967C)(With Large ID K2 Clutch)(Fits A 4 Gear Rear Planet)	1	

PART #	MASTER W/STEELS KIT	QTY	REFERENCE #
78006A	Master W/Steels Kit, 722.6 1996-01 (For B1 Bonded Piston Sell 78967A)	1	
78006AA	Master W/Steels Kit, 722.6 1996-01 (With Small ID K2 Clutch)(Fits 3 Gear Rear Planet) (With Double Sided Frictions)(For B1 Bonded Piston Sell 78967A)	0	
78006C	Master W/Steels Kit, 722.6 (Mercedes) 2002-Up (With Six 78114C & Six 78134C B1 Single Sided Frictions)(With Large ID K2 Clutch, Fits A 4 Gear Rear Planet)(For B1 Bonded Piston Sell # 78967C)	1	
78006CA	Master W/Steels Kit, 722.6 (Chrysler) 2002-Up (With Ten 78114C & Ten 78134C B1 Single Sided Frictions)(With Large ID K2 Clutch, Fits A 4 Gear Rear Planet)(For B1 Bonded Piston Sell # 78967C)	1	

PART #	FILTERS	QTY	REFERENCE #
78010A	Filter, 722.6 (All) 1996-Up	1	

PART #	BUSHINGS	QTY	REFERENCE #
78030A	Bushing Kit, 722.6 1996-On (4 Pieces)	1	
78034A	Bushing, 722.6 Pump Body (1.690”ID) (Bronze) 1996-Up (Can Use 68034B)	1	
68034B	Bushing, 722.6 Pump Body (Front) (1.690”ID)	1	
S68034BA	Bushing, 722.6 Front Pump Body (Unfinished)(Sonnax) (Pump Body Must Be Machined And Bushing Finished In Place)	1	
78037A	Bushing, 722.6 Stator (Rear) 1.235”ID (Brass) 1996-Up	1	
78038A	Bushing, 722.6 (Mercedes) K2 Drum (Rear) (.915”ID) 1996-Up	1	
A78038C	Bushing, 722.6 K2 Drum (Rear)(Replaces The 78215C Bearing) 2004-Up (Superior)	1	
78215C	Caged Needle Bearing, 722.6 (Chrysler) K2 Drum (Rear) (Cast # HK2210) 2004-Up	1	
78038K	Bushing Set, 722.6 (Mercedes) K2 Drum (Rear) (Contains: 1 Stock Bushing .915”ID & 1 Oversize Bushing) (The Oversize Bushing Is For The Only Output Shaft That Mercedes Offers New)	1	
78056A	Bushing, 722.6 (Mercedes) Rear Sun Gear (.188” Wide) 1996-Up (2.999”OD) (Split, Brass)	1	

PART #	METAL CLAD SEALS	QTY	REFERENCE #
68070B	Seal, 722.6 Front 1996-Up	1	
68072B	Seal, 722.6 Linkage Shaft (.710”OD)(.469”ID) 1996-Up	1	
78074A	Seal, 722.6 Rear (2.445”OD)(1.610”ID)(No Boot, No Lip) 1996-Up	1	
78074C	Seal, 722.6 4x4 Rear adapter Housing (2.450”OD)(1.610”ID)(With Lip) 1996-06	1	

PART #	FRICTION CLUTCH	QTY	REFERENCE #
78100A	Friction, 722.6 (Mercedes) K2 Clutch (.085”) 36 Teeth (6 1/2”OD) 1996-Up (With Small ID Fits A 3 Gear Rear Planet #584)	3-6	210-272-00-25
78100AA	Friction, 722.6 K2 Clutch (.085”) 36 Teeth (6 1/2”OD) 1996-Up (With Large ID, Fits A 4 Gear Rear Planet # 584)	5-6	140-272-01-25
78102A	Friction, 722.6 (Mercedes) K3 Clutch (.087”) 24 Teeth (2 Sided) 1996-Up	3	
78102C	Friction, 722.6 (Chrysler) K3 Clutch (.082”) 24 Teeth Internal 2004-Up (1 Sided Friction)	5	

© Whatever It Takes Transmission Parts. Inc.

78104A ..... Friction, 722.6 B2 Clutch (.064") 40 External Teeth (5.215"ID) 1996-Up ..... 4-5 .....
78106A ..... Use 78114A ..... 6 .....
78106C ..... Use 78114C ..... 6 .....
78110A ..... Friction, 722.6 B3 Clutch (.065") 46 Teeth (7 1/8"OD) 1996-Up ..... 3-5 .....
78114A ..... Friction, 722.6 (Mercedes) B1 Clutch (.085") 30 Teeth (6 13/16"OD) 1996-Up
..... (Double Sided) (Also Fits 722.6 (Mercedes) K1 Clutch) ..... 4-10 .....
78114C ..... Friction, 722.6 (Chrysler) B1 Clutch (.081") 30 Teeth Inner, 1 Sided (6 3/16"OD)
..... 2004-Up (Also Fits K1 Clutch) ..... 4-10 .....
78119A ..... Friction Module, 722.6 (With Large ID K2 Friction, For A 4 Gear Rear Planet) 1996-01 ..... 1 .....
78119AA ..... Friction Module, 722.6 (With Small ID K2 Friction, For A 3 Gear Rear Planet) 1996-01 ..... 1 .....
78119C ..... Friction Module, 722.6 (With Large ID K2 Friction, For A 4 Gear Rear Planet) 2002-Up ..... 1 .....
78119CA ..... Friction Module, 722.6 (With Small ID K2 Friction, For A 3 Gear Rear Planet) 2002-Up ..... 1 .....
78119CAA ..... Friction Module, 722.6 (With Large ID K2 Friction, For A 4 Gear Rear Planet) 2006-Up ..... 1 .....
78119CB ..... Friction Module, 722.6 (With Large ID K Friction, For A 4 Gear Rear Planet) 2002-Up
..... (Chrysler NAG1 5.7L & 6.1L Hemi Engine) ..... 1 .....
78119CBS1 .... Friction Module, 722.6 (Stage 1)(With Large ID K2 Friction, For A 4 Gear Rear Planet) 1996-Up . 1 .....

PART #	STEEL CLUTCH	QTY	REFERENCE #
78120A	Steel, 722.6 (Mercedes) K2 Clutch (.136") 30 Teeth (5.755"ID) 1996-Up	3	
78120C	Steel, 722.6 (Chrysler) K2 Clutch (.110") 30 Teeth (5.755"ID) 2004-Up	4	
78121A	Steel, 722.6 K2 Clutch (.069") 30 Teeth (Bottom) 1996-Up	1	
78121C	Cushion, 722.6 (Chrysler) K2 Clutch (.077") 3 Teeth (Goes Under # 121A) 2004-Up	1	
78122A	Steel, 722.6 (Mercedes) K3 Clutch (.108") (24 Teeth) 1996-Up	4	
78122AA	Steel, 722.6 (Mercedes) K3 Clutch (.070") (24 Teeth) 1996-Up (This Is The Bottom Steel)	1	
78122AB	Steel, 722.6 (Mercedes) K3 Clutch (.138") (24 Teeth) 1996-97	3-4	141709-350
78122C	Friction, 722.6 (Chrysler) K3 Clutch (.082") (24 Teeth External) 2004-Up
..... (1 Sided Friction)	4	
78123A	Cushion, 722.6 K3 Clutch (.067") 4 Teeth (3.455"ID) 1996-Up	1	
78124A	Steel, 722.6 B2 Clutch (.070") 24 Internal Teeth (6 1/8"OD) 1996-Up	3-4	
78124AA	Steel, 722.6 B2 Clutch (Bottom) .069" (40 External Teeth) 1996-Up (5.215"ID)	1	
78125A	Cushion, 722.6 B2 Clutch (.080") (4 External Teeth) 1996-Up	1	
78126A	Use U78134A	6	
78126AA	Use U78134AA	6	
78126C	Use 78134C	6	
78127A	Use U78135A	1	
78130A	Steel, 722.6 B3 Clutch (.070") 30 Teeth (6 1/8"OD) 1996-Up	3-5	
78131A	Cushion, 722.6 B3 Clutch (Bottom) .109" (3 Teeth) 6 1/8"ID 1996-Up	1	
78134A	Steel, 722.6 (Mercedes) B1 Clutch (.069") 12 Teeth (Bottom) 6.063"ID 1996-Up
..... (Also Fits 722.6 (Mercedes) K1 Clutch)	2	
78134AA	Steel, 722.6 (Mercedes) B1 Clutch (.135") 12 Teeth (Middle) 1996-Up (6.063"ID) .....
..... (Also Fits 722.6 (Mercedes) K1 Clutch)	1-2	
78134C	Friction, 722.6 (Chrysler) B1 Clutch (.082") 12 Teeth Outer, 1 Sided) 2004-Up
..... (6.063"ID) (Also Fits 722.6 (Chrysler) K1 Clutch)	3-5	
78135A	Cushion, 722.6 B1 Clutch (.061") 3 Teeth (6.067"ID) 1996-Up (Also Fits 722.6 K1 Clutch)	2	

PART #	PRESSURE PLATES	QTY	REFERENCE #
78140A	Pressure Plate, 722.6 K2 Clutch (.156") 30 Teeth (5.765"ID) 1996-Up	1	
78142A	Pressure Plate, 722.6 K3 Clutch (Top) .155" (24 Teeth) 3.465"ID 1996-Up	1	
78144A	Pressure Plate, 722.6 B2 Clutch (Top) .255" (40 Teeth) 5.210"ID 1996-Up	1	
78146A	Use U78154A	1	
78150A	Pressure Plate, 722.6 B3 Clutch (Top) .255" (30 Teeth) 6 1/8"ID 1996-Up	1	
78154A	Pressure Plate, 722.6 B1 Clutch (.156") 12 Teeth (6.063"ID) 1996-Up
..... (Also Fits 722.6 K1 Clutch)	1-2	

PART #	VALVE BODY KITS	QTY	REFERENCE #
T78165A	Shift Kit, 722.6 (All) 1996-Up (Transgo)	3	

PART #	SEALING RINGS	QTY	REFERENCE #
78177AT	Ring, 722.6 (Mercedes) Input Shaft (Scarf Cut) (Teflon) 1996-Up	3	
78177CT	Ring, 722.6 (Chrysler) Input Shaft (Lap Joint) (Teflon) 2004-Up (The Lap Joint Is Like A
..... Mortise & Tenon Joint)	3	
78179AT	Ring, 722.6 Stator To K1 Drum (Teflon) 1996-Up	3	
78182A	O-Ring, 722.6 Center Sun Gear 1996-Up	2	
78183A	O-Ring, 722.6 B2 Clutch Housing Support 1996-Up	2	
78184AT	Ring, 722.6 (Mercedes) Output Shaft (Scarf-Cut) (Teflon) 1996-Up	5	
78184CT	Ring, 722.6 (Chrysler) Output Shaft (Lap Joint) (Teflon) 2004-Up	5	

© Whatever It Takes Transmission Parts. Inc.

PART #	WASHERS & BEARINGS	QTY	REFERENCE #
78211A	Bearing W/Race, 722.6 Stator To K1 Drum (.119” Thick) 1996-Up (3.420”OD) (2.720”ID)	1	
78214A	Bearing W/Race, 722.6 (Mercedes) Front Planet To K2 Drum 1996-Up (No Tabs)	1	
78214C	Bearing W/Race, 722.6 (Chrysler) Front Planet To K2 Drum 2004-Up (With 2 Outer Tabs)	1	
78215C	Caged Needle Bearing, 722.6 (Chrysler) K2 Drum (Rear) (HK2210) 2004-Up	1	
S78215CK	Caged Needle Bearing W/Teflon Seal, 722.6 (Chrysler) K2 Drum (Rear) 2004-Up(Sonnax)	1	
78216A	Race, 722.6 K2 Drum To Center Planet (1.686”OD) 1996-Up	1	
78217A	Bearing, W/Race, 722.6 K2 Drum To Center Planet (1.755”OD) 1996-Up	1	
78220A	Bearing, 722.6 (Mercedes) Rear Sun Gear To K3 Drum (.078” Thick) 1.905”ID (2.403”OD) 1996-Up	1	
78220C	Race, 722.6 (Chrysler) Rear Sun Gear To Bearing #221 (038” Thick)(1.915”ID)(2.553”OD 2004-Up	1	
78221A	Race, 722.6 (Mercedes) Rear Sun Gear To K3 Drum (.125” Thick) 1.095”ID (2.395”OD) 1996-Up	1	
78221C	Ball Bearing, 722.6 (Chrysler) Rear Sun Gear To K3 Drum (.392” Thick)(2.560”OD) (Cast # INA A210 981 03 25) 2004-Up	1	
78228A	Caged Needle Bearing, 722.6 Stator (Outer) To K1 Drum 1996-Up (.307” Wide, 2.700”OD)	1	
78231A	Race, 722.6 Center Sun Gear To B2 Clutch Housing (Stepped) 1996-Up (.177” Thick) 1.405”ID (2.198”OD)	1	
78232A	Bearing, 722.6 Center Sun Gear To B3 Clutch Housing 1996-Up (.078”) 1.385”ID (1.840”OD)	1	
78233A	Race, 722.6 (Mercedes) Center Sun Gear To B2 Clutch Housing 1996-Up(.121” Thick) 1.386”ID (1.822”OD)	1	
78233C	Race, 722.6 (Chrysler) Center Sun Gear To B2 Clutch Housing 2004-Up	1	
	(.132” Thick) 1.386”ID (1.822”OD)	1	
78238A	Bearing W/Race, 722.6 (Mercedes) K1 Drum To Front Planet 1996-Up (2.922”OD) .110” Thick (2.347”ID)	1	
78238C	Bearing, 722.6 (Chrysler) K1 Drum To Front Planet 2004-Up (2.859”OD) .078” Thick (2.347”ID)	1	
78246A	Race, 722.6 (Mercedes) Center Planet To Rear Planet (.031” Thick) 2.744”OD (2.235”ID) 1996-Up	1	
78246C	Race, 722.6 (Chrysler) Center Planet To Rear Planet 2004-Up (.031” Thick) 2.554”OD (2.045”ID)	1	
78247A	Bearing W/Race, 722.6 (Mercedes) Center Planet To Rear Planet (.110” Thick) 2.850”OD (2.238”ID) No Tabs	1	
78247C	Bearing W/Race, 722.6 (Chrysler) Center Planet To Rear Planet (.110” Thick) 2.670”OD (2.053”ID) 2 Tabs 2004-Up	1	
78248A	Bearing W/Race, 722.6 (Mercedes) Rear Planet To Rear Sun Gear (.136 Thick) 2.985”OD (2.235”ID) No Tabs 1996-Up	1	
78248C	Bearing W/Race, 722.6 (Chrysler) Rear Planet To Rear Sun Gear (.136” Thick) 2.985”OD (2.060”ID) 2 Tabs 2004-Up	1	
78250A	Split Caged Needle Bearing, 722.6 Output Shaft (Plastic) 1996-Up	1	
78270AA	Shim, 722.6 Park Gear To Rear Case Ball Bearing (.008”) 1996-Up	1	
78270AB	Shim, 722.6 Park Gear To Rear Case Ball Bearing (.012”) 1996-Up	1	
78270AC	Shim, 722.6 Park Gear To Rear Case Ball Bearing (.016”) 1996-Up	1	
78270AD	Shim, 722.6 Park Gear To Rear Case Ball Bearing (.020”) 1996-Up	1	
78270AK	Shim Kit, 722.6 Park Gear To Rear Case Ball Bearing (Contains: .008”, .012”, .016”, .020” Shims)(Also Contains: 12 Shims For K2 Drum To Race #216)(For End Play)(Superior)	1	
78271A	Ball Bearing, 722.6 Case To Output Shaft (1.256”ID) (2.441”OD) 1996-Up (Cast # 140 981 01 25, INA 6206E A HO1)	1	

PART #	GASKETS & RUBBER COMPONENTS	QTY	REFERENCE #
78300A	Gasket, 722.6 Bottom Pan 1996-Up	1	
78311A	O-Ring, 722.6 Pump Body To Bell 1996-Up	1	
78347A	O-Ring, 722.6 Case Connector (Large)(Orange) 1996-04	1	
78347AA	O-Ring, 722.6 Case Connector (Small)(Orange) 1996-04	1	
78347C	O-Ring, 722.6 Case Connector (Large)(Black) 2005-Up	1	
78347CA	O-Ring, 722.6 Case Connector (Small)(Black) 2005-Up	1	
78371C	Boot, 722.6 (Chrysler) Filler Tube 2004-Up	1	

PART #	TECHNICAL MANUALS	QTY	REFERENCE #
78400A	Tech Manual And DVD, 722.6 1996-Up (Updated)	1	
78400AA	Tech Manual (Without CD), 722.6 1996-Up	1	

MERCEDES

© Whatever It Takes Transmission Parts. Inc.

PART #	MISCELLANEOUS COMPONENTS	QTY	REFERENCE #
78414A	Parking Lock Interlock Linkage, 722.6 (Early Design, Uses A Locking Tab To Attach To Cable)	1	
78414AA	Parking Lock Interlock Linkage, 722.6 (Late Design, Uses A Twist Lock To Attach To Cable)	1	

PART #	ELECTRICAL COMPONENTS	QTY	REFERENCE #
78421A	Solenoid, 722.6 1-2/4-5 Shift (2 O-Ring Type) 1996-Up (Also Fits 722.6 2-3 (#422) & 3-4 (#423) Shift)	1-4	
78422A	Use 78421A	1	
78423A	Use 78421A	1	
78425A	Solenoid, 722.6 Lock-Up (PWM) (1 O-Ring Type) 1996-Up	1	
78431A	Solenoid, 722.6 Modulating Pressure Regulating 1996-Up (Also Is A Shift Pressure Regulating Solenoid) (No O-Rings)	1	
78444A	Connector, 722.6 Valve Body To Case (Plastic, 13 Pin Holes)(1 Bolt, 2 O-Rings) 1996-Up	1	
78446A	Conductor Plate, 722.6 (Mercedes & Sprinter Van With Cast # 140 270 1161) Valve Body 1996-Up	1	
78446C	Conductor Plate, 722.6 (Some Chrysler With Cast # 140 270 1261 Or 140 270 0961) Valve Body (With Input & Output Sensors) 2004-Up	1	
78459A	Cover, 722.6 Solenoid (The 2 Solenoid Cover) 1996-Up	1	
78459B	Cover, 722.6 Solenoid (The 4 Solenoid Cover) 1996-Up	1	

PART #	MISCELLANEOUS COMPONENTS	QTY	REFERENCE #
78475C	Teflon Sleeve, 722.6 (Chrysler) Under #215 Bearing In K2 Drum 2004-Up	1	
78490A	Vent, 722.6 (Mercedes) Bell Housing (Round Plastic) 1996-Up	1	
78490C	Vent, 722.6 (Chrysler) Bell Housing (Plastic Elbow) 2004-Up	1	
78493-1A	Dipstick Lock Pin, 722.6	1	

PART #	HARD PARTS	QTY	REFERENCE #
78510A	Pump Body W/Gears, 722.6 (5.980"OD)(.502" Thick Gears)(Cast Iron) 1996-Up	1	
78520A	Stator, 722.6 (Mercedes) Uses 2 Double Sided Frictions On Rear 1996-Up (Cast # 140 272 10 24)	1	
78520AA	Stator, 722.6 (Mercedes) (Uses 3 Double Sided Frictions On Rear) 1996-Up (Cast # 140 272 10 24)	1	
78520AB	Stator, 722.6 (Mercedes) (Uses 4 Double Sided Frictions On Rear) 1996-Up (Cast # 140 272 10 24)	1	
78520AC	Stator, 722.6 (Mercedes)(Uses 3 Double Sided Frictions On Rear) 1996-Up (Cast # R140 272 2224)	1	
78520C	Stator, 722.6 (Chrysler) (Uses 3 Single Sided Frictions On Rear) 2004-Up (Cast # 140 272 22 24)	1	
78520CA	Stator, 722.6 (Chrysler)(Uses 4 or 5 Single Sided Frictions On Rear) 2004-Up (Cast # 140 272 22 24)	1	
78520AD	Stator, 722.6 (Mercedes) (Uses 4 Double Sided Frictions On Rear) 1996-Up (Cast # R140 272 2224)	1	
78520C	Stator, 722.6 (Chrysler)(Uses 3 Single Sided Frictions On Rear) 2004-Up (Cast # 140 272 2224)	1	

PART #	PUMP COMPONENTS	QTY	REFERENCE #
78530A	Pump Gear Set, 722.6 (.502" Thick) 19 Teeth Inner (23 Teeth Outer) 1996-Up (2 Drive Lugs For Converter)	1	
78544A	Plate, 722.6 (Mercedes) Pump (68 Holes Total) 1996-97	1	140-277-4214
78544C	Plate, 722.6 Pump (69 Holes Total) 1998-Up	1	
78544E	Pump Wear Plate, 722.6 (Aftermarket Fix For Pump Body To Bell Housing)(Fixes Wear From The Pump Gears)	1	

PART #	HARD PARTS (Continued)	QTY	REFERENCE #
78550A	Drum W/Shaft, 722.6 (Mercedes) K2 (With 90 Teeth Ring Gear) 1996-Up (Has A Bushing # 038, Inside Rear)	1	
78550AA	Drum W/Shaft, 722.6 (Mercedes) K2 (With 90 Teeth Ring Gear) 1996-Up (Has A Casged Needle Bearing #215 & Teflon Sleeve #475 Inside)	1	
78550AB	Drum W/Shaft, 722.6 (Mercedes) K2 (With 78 Teeth Ring Gear) 1996-Up (Has A Bushing #038 Inside Rear)	1	
78550AC	Drum W/Shaft, 722.6 (Mercedes) K2 (With 79 Teeth Ring Gear) 1996-Up (Has A Bushing #038 Inside Rear)	1	

© Whatever It Takes Transmission Parts. Inc.

PART #	HARD PARTS (Continued)	QTY	REFERENCE #
78550AD	Drum W/Shaft, 722.6 (All) K2 (With 79 Teeth Ring Gear) 2004-Up (Has A Caged Needle Bearing # 215 & Teflon Sleeve # 475 Inside Rear)	1	
78550B	Drum W/Shaft, 722.6 (Mercedes) K2 (With 92 Teeth Ring Gear) 1996-Up (Has A Caged Needle Bearing #215 & Teflon Sleeve # 475 Inside Rear)	1	
78550C	Drum W/Shaft, 722.6 (Chrysler) K2 (With 78 Teeth Ring Gear) 2004-Up (Has A Caged Needle Bearing #215 & Teflon Sleeve #475 Inside Rear)	1	
78551A	Drum, 722.6 (Mercedes) K3 Clutch (3 Clutch)(2.235" Tall)(.390" From Top Of Snap Ring Groove To Top Of Drum)(Uses 3 Two Sided Frictions) 1996-Up	1	
78551AA	Drum, 722.6 (Mercedes) K3 Clutch (4 Clutch)(2.235" Tall)(.190" From Top Of Snap Ring Groove To Top Of Drum)(Uses 4 Two Sided Frictions) 1996-Up	1	
78551C	Drum, 722.6 (Chrysler) K3 Clutch (4 Clutch)(2.235" Tall)(.260" From Top Of Snap Ring Groove To Top Of Drum)(Uses 4 One Sided Internal Teeth Frictions) 2004-Up	1	
78551CA	Drum, 722.6 (Chrysler) K3 Clutch (5 Clutch)(2.450" Tall)(.190" From Top Of Snap Ring Groove To Top Of Drum)(Uses 5 One Sided Internal Frictions)(Hemi) 2004-Up	1	
78552A	Housing, 722.6 (Mercedes) B2 Clutch (Cast # 202 272 04 31) 1996-Up (Aluminum) (3.495" Thick)	1	
78552C	Housing, 722.6 (Chrysler) B2 Clutch (Cast # 210 272 19 31) 2004-Up (Aluminum) (3.180" Thick)	1	
78555A	Drum, 722.6 (Mercedes) K1 Clutch (3 Clutch) With 50 Teeth Sun Gear (Uses Double Sided Friction) (Cast # R210 272 00 24) 1996-Up	1	
78555AC	Drum, 722.6 (Mercedes) K1 Clutch (4 Clutch) With 58 Teeth Sun Gear (Uses Double Sided Friction)(Cast # R140 272 11 24) 2004-Up	1	
78555C	Drum, 722.6 (Chrysler) K1 Clutch (5 Clutch) With 58 Teeth Sun Gear (Uses 1 Sided Friction) (Cast # R140 272 11 24) (From Snap Ring Groove To Top Of Clutch Area Is .775") 2004-Up	1	
78555CA	Drum, 722.6 (Chrysler) K1 Clutch (6 Clutch) With 58 Teeth Sun Gear (Uses 1 Sided Friction) (Cast # R140 272 11 24) (From Snap Ring Groove To Top Of Clutch Area Is .580") 2004-Up	1	
78555CB	Drum, 722.6 (Chrysler) K1 Clutch (6 Clutch) With 50 Teeth Sun Gear (Uses 1 Sided Friction) (Cast # R140 272 11 24) (From Snap Ring Groove To Top Of Clutch Area Is .520") 2004-Up	1	
78560A	Piston Kit, 722.6 (Mercedes) K2 Clutch (1.775" Thick Piston) 1996-Up	1	
78560C	Piston Kit, 722.6 (Chrysler) K2 Clutch (1.595" Thick Piston) 2004-Up	1	
78561A	Piston Kit, 722.6 K3 Clutch (Aluminum Piston # 140 272 19 31) 1996-Up	1	
78562A	Piston Kit, 722.6 B2 Clutch (Outer Piston # 140 272 20 31) 1996-Up	1	
78565A	Piston Kit, 722.6 K1 Clutch (Aluminum) 1996-Up	1	
78567A	Piston Kit, 722.6 (Mercedes) B1 Clutch (Bonded) (.700" Thick) 1996-Up	1	
78567C	Piston Kit, 722.6 (Chrysler) B1 Clutch (Bonded) (.877" Thick) 2004-Up	1	
78580A	Planet W/Shaft, 722.6 (Mercedes) Center (34 Teeth Sun Gear) 1996-Up (.905"OD Front Pilot)	1	
78580AE	Planet W/Shaft, 722.6 (Mercedes) Center (34 Teeth Sun Gear) 2002-Up (.866"OD Front Pilot)	1	
78580B	Planet W/Shaft, 722.6 (Mercedes)(4x4) Center (30 Teeth Sun Gear) 2002-Up (.905"OD Front Pilot)	1	
78580C	Planet W/Shaft, 722.6 (Chrysler) (4x4) Center (30 Teeth Sun Gear) 2004-Up (.870"OD Front Pilot)	1	
78582A	Planet, 722.6 (Mercedes) Front (3 Gear Aluminum) (50 Teeth Sun Gear) 1996-Up	1	
78582C	Planet, 722.6 (Chrysler) Front (4 Gear Aluminum) (58 Teeth Sun Gear) 2004-Up	1	
78583A	Planet Assembly, 722.6 (Mercedes) Uses 34 Teeth Sun Gear #610 (.905"OD Pilot # 580) (#584 IS 4.02" Tall With 16 Teeth Gears)(#594 Is 5 1/2"ID)(Includes: # 594,580, 250, 889, 590, 246, 247, 584, 610, 866, 654, 614, 056, 220, 221 & 888)	1	
78583AA	Planet Assembly, 722.6 (Mercedes) 34 Teeth Sun Gear # 610 (.905"OD Pilot #580) (#584 Is 4.270" Tall With 19 Teeth Gears) (#594 Is 5 3/4"ID) (Includes: 594, 580, 250, 889, 590, 246, 247, 584, 248, 610, 866, 654, 614, 056, 220, 221 & 888)	1	
78583AC	Planet Assembly, 722.6 (Mercedes) 34 Teeth Sun Gear # 610 (.629"OD Pilot # 580) (#584 Is 4.02" Tall With 16 Teeth Gears) (#594 Is 5 1/2"ID) (Includes: 594, 580, 250, 889, 590, 246, 247, 584, 248, 610, 866, 654, 614, 056, 220, 221 & 888)	1	
78583AD	Planet Assembly, 722.6 (Mercedes) (34 Teeth Sun Gear #610)(.866"OD Pilot #580) (#584 Is 4.02" Tall With 16 Teeth Sun Gears)(#594 Is 5 1/2"ID) (Includes # 594, 580, 250, 889, 590, 246, 247, 584, 248, 610, 866, 654, 614, 056, 220, 221 & 888)	1	
78583AE	Planet Assembly, 722.6 (Mercedes) (34 Teeth Sun Gear #610)(.866"OD Pilot # 580) (#584 Is 4.050" Tall With Three 19 Teeth Gears)(#594 Is 5 1/2"ID With 103 Teeth)(Uses A 65 Teeth #614)(Includes # 594, 580,250,889,590,246,247,584,248,610,866,654,614,056, 220, 221 & 888)	1	
78583B	Planet Assembly, 722.6 (Mercedes) 4x4 (30 Teeth Sun Gear #614)(.905"OD Pilot #580) (#584 Is 4.290" Tall W/3 19 Teeth Gears)(#594 Is 90 Teeth)(Includes # 594, 580, 250, 889, 590, 246, 247, 584, 248, 610, 866, 654, 614, 056, 220, 221 & 888) 2002-Up	1	
78583C	Planet Assembly, 722.6 (Chrysler) (4x4) 30 Teeth Sun Gear #610 (.870"OD Pilot #580) (Includes: # 594, 580, 250, 889, 590, 246, 247, 584, 248, 610, 866, 654, 614, 056, 220, 221 & 888)	1	

MERCEDES

© Whatever It Takes Transmission Parts. Inc.

78584A ..... Planet, 722.6 (Mercedes) Rear (3 Gear) 54 Teeth Sun Gear (Aluminum Housing)
..... (No Notches For # 247) (4.02" Tall) (16 Teeth Pinions) 1996-Up ..... 1 .....
78584AE ..... Planet, 722.6 (Mercedes) Rear (3 Gear) (65 Teeth Sun Gaer)(Aluminum Housing)
..... (4.050"Tall) (19 Teeth Pinions) 2002-Up ..... 1 .....
78584B ..... Planet, 722.6 (Mercedes) Rear (3 Gear)(30 Teeth Sun Gear)(Aluminum Housing)
..... (4.290" Tall)(19 Teeth Pinions) 2002-Up ..... 1 .....
78584C ..... Planet, 722.6 (Chrysler) Rear (4 Gear) 60 Teeth Sun Gear (Aluminum Housing)
..... (2 Notches For #247) 2004-Up ..... 1 .....
78590A ..... Ring Gear, 722.6 (Mercedes) Center Planet (69 Teeth) 18 Lugs (1.160" Wide)
..... 1996-Up ..... 1 .....
78590C ..... Ring Gear, 722.6 (Chrysler) Center Planet (74 Teeth) 18 Lugs (1.240" Wide)
..... 2004-Up ..... 1 .....
78594A ..... Ring Gear, 722.6 (Mercedes) Rear Planet (87 Teeth)(36 Outer Lugs)(5 1/2"ID) 1996-Up ..... 1 .....
78594AE ..... Ring Gear, 722.6 (Mercedes) Rear Planet (103 Teeth)(36 Outer Lugs)(5 1/2"ID) 2002-Up ..... 1 .....
78594B ..... Ring Gear, 722.6 (Mercedes) Rear Planet (90 Teeth) 36 Outer Lugs 2002-Up ..... 1 .....
78594C ..... Ring Gear, 722.6 (Chrysler) Rear Planet (108 Teeth) 36 Outer Lugs 2004-Up ..... 1 .....
78610A ..... Sun Gear, 722.6 (Mercedes) Center Planet (34 Teeth) 1996-Up ..... 1 .....
78610C ..... Sun Gear, 722.6 (Chrysler) Center Planet (30 Teeth) 2004-UP ..... 1 .....
78614A ..... Sun Gear, 722.6 (Mercedes) Rear Planet (54 Teeth) 24 Teeth Clutch Hub
..... (3.015" Long) (Has A Bushing Inside) 1996-Up ..... 1 .....
78614AB ..... Sun Gear, 722.6 (Mercedes) Rear Planet (50 Teeth)(24 Teeth Clutch HUb)(3.015" Long)
..... (Has A Bushing Inside) 1996-Up ..... 1 .....
78614AE ..... Sun Gear, 722.6 (Mercedes) Rear Planet (65 Teeth) 2002-Up ..... 1 .....
78614B ..... Sun Gear, 722.6 (Mercedes) Rear Planet (30 Teeth)(24 Teeth Clutch Hub)(3.015" Long)
..... (Uses A Bearing Inside) 2002-Up ..... 1 .....
78614C ..... Sun Gear, 722.6 (Chrysler) Rear Planet (60 Teeth) 24 Teeth Clutch Hub
..... (3.015" Long) Uses A Bearing Inside 2004-Up ..... 1 .....
78620A ..... Shell, 722.6 (Mercedes) Driving (For 3 Gear Front Planet) 1996-Up ..... 1 .....
78620C ..... Shell, 722.6 (Chrysler) Driving (For 4 Gear Front Planet) 2004-Up ..... 1 .....
78634A ..... Support, 722.6 B2 Clutch Housing (Cast # 140 272 06 32) 1996-Up
..... (Aluminum With Steel Sleeve Inside) (6 11/16"OD) ..... 1 .....

PART #	SPRAGS & ONE WAY CLUTCHES	QTY	REFERENCE #
78654A	Sprag, 722.6 (Mercedes) F2 (Rear) (14 Elements) 1996-Up	1	
78654C	Sprag, 722.6 (Chrysler) F2 (Rear) (20 Elements) 2004-Up (Retro Fits 1996-Up)	1	
78658A	Sprag W/End Washers, 722.6 (Mercedes) F1 (16 Elements) 1996-Up (Use 78658C)	1	
78658C	Sprag W/End Washers, 722.6 (Chrysler) F1 (20 Elements)(.844" Thick Washers) 2004-05		
.....	(Retro Fits 1996-05)	1	722-270-0031
78658CA	Sprag W/End Washers, 722.6 F1 (20 Elements)(.924" Thick With Washers) 2006-Up	1	

PART #	HARD PARTS (Continued)	QTY	REFERENCE #
78690A	Parking Gear, 722.6 (16 Lugs) (6.062"OD) 1996-Up	1	
78740A	Valve Body, 722.6 (Mercedes) With 6 Solenoids (Cast # 02 06 Below The Manual Valve		
.....	Stop) 1996-Up	1	
78740AA	Valve Body, 722.6 (Mercedes) With 6 Solenoids (Cast # 04 06 Below The Manula Valve		
.....	Stop) 1996-Up	1	
78740AB	Valve Body, 722.6 (Mercedes) With 6 Solenoids (Cast # 05 06 Below The Manual Valve		
.....	Stop) 1996-Up	1	
78740AC	Valve Body, 722.6 (Mercedes/Sprinter Van) With 6 Solenoids (Cast # 06 06 Below The		
.....	Manual Valve Stop) 1996-Up	1	
78740C	Valve Body, 722.6 (Chrysler) With 6 Solenoids (Cast # 52108216AA) 2004-Up	1	

PART #	VALVE BODY COMPONENTS	QTY	REFERENCE #
S68741AP-3 ...	Spring, 722.6 Solenoid Pressure Regulator (Sonnax)	1	
S78741CAK	Valve Kit, 722.6 TCC Lock-Up Regulator (Sonnax)(Must Use T-F-68942-TL10 & T-VB-Fix)	1	
T-F-68942-TL10	Reamer For S78741CAK	1	
T-VB-Fix	Valve Body Reaming Fixture (Sonnax)	1	
S78741CDK	Valve Kit, 722.6 TCC Damper (Contains: Valve, Sleeve, Spring, Clip & O-Rings)(Sonnax)	1	
S78741DK	Overlap Control Valve Sleeve Kit, 722.6 (1-2/4-5, 2-3, 3-4 Overlap Control Valve (Sonnax)		
.....	(Contains: 3 Sleeves & 3 O-Rings)	1	
S78741DAK	Valve Kit, 722.6 1-2/4-5 Overlap Valve (Contains: Valve, Spring, Plunger Valve & Sleeve)		
.....	(Sonnax)(Must Use T-F-68942-TL19)	1	
T-F-68942-TL19 .	Reamer For S78741DAK	1	
S78741DBK	Valve Kit, 722.6 3-4 Overlap Valve (Oversize)(Contains: Valve, Plunger Valve & Sleeve, Spring)		
.....	(Sonnax)(Must Use Reamer T-F-68942-TL31)	1	
T-F-68942-TL31	Reamer For S7874DBK	1	
S78741DCK	Valve Kit, 722.6 2-3 Overlap Valve (Oversize)(Contains: Valve, Plunger Valve & Spring)(Sonnax)		
.....	(Must Use Reamer T-F-68942-TL27)	1	

MERCEDES

© Whatever It Takes Transmission Parts. Inc.

PART #	VALVE BODY COMPONENTS (Continued)	QTY	REFERENCE #
T-F-68942-TL27	Reamer For S78741DCK	1	
S78741PK	Pressure Regulator Assembly, 722.6 (Contains: Valve, Inner & Outer Spring)(Sonnax)(Must Use T-F-68942-TL7 & T-VB-Fix)	1	
T-F-68942-TL7	Reamer For S78741PK	1	
S78741P-PK	Valve Kit, 722.6 Lubricating Pressure Control (Contains: Valve & Spring)(Sonnax)(Must Use T-F-68942-TL14)	1	
S78741PAK	Valve Kit, 722.6 Oversize Pressure Regulator (Contains: Valve & Spring)(Sonnax)(Must Use T-F-68942-TL14)	1	
T-F-68942-TL14	Tool For S78741P-PK & S78741PAK	1	
A78741PL	Valve, 722.6 Pressure Regulator Lube Bore (LPR)(Superior)(Must Use A78741PLK Also)	1	
A78741PLK	Repair Kit, 722.6 Pressure Regulator Lube Bore (Repairs 5 Units)(Contains: 5 Valves, 1 Reamer, 1 Reamer Guide, 1 Alignment Pin, 1 Bore Brush & 4 Bolts)(Superior)	1	

PART #	HARD PARTS (Continued)	QTY	REFERENCE #
78690A	Parking Gear, 722.6 (16 Lugs) (6.062”OD) 1996-Up	1	
78750AB	Bell Housing, 722.6 (Mercedes) 4 5/8” Top Bolts (Square Top) Starter At 3:00 (Cast # R210 271 09 01) 1996-Up	1	
78750AE	Bell Housing, 722.6 (Mercedes) 5 3/4” Top Bolts (Round Top) Starter At 3:00 & 9:00 (Cast # R140 271 27 01) 1996-Up	1	
78750AJ	Bell Housing, 722.6 (Mercedes) 6” Top Bolts (Round Top) Starter At 3:00 & 9:00 (Cast # 210 271 08 01) 1996-Up	1	
78750AL	Bell Housing, 722.6 (Mercedes) (Round Top)(Cut Out At 1:00)(Starter At 3:00 & 9:00)(14 Holes To Engine)(4.2L)(S240)	1	
78750C	Bell Housing, 722.6 (Chrysler) 8 3/4” Top Bolts (Round Top) 2004-Up (Starter At 3:00) Cast # 435AA-1, 29340287, 521084030)	1	
78750D	Bell Housing, 722.6 (Chryseler) (8 3/4”Top Bolts)(Round Top)(8:30 Starter)(5.7L & 6.1L)	1	
78750E	Bell Housing, 722.6 (Chryseler) (3 3/4”Top Bolts)(Mouse Ear Top)(3:00 Starter)(13 Holes To Engine)(3.5L & 4.0L)	1	
78750EA	Bell Housing, 722.6 (Chryseler) (3 3/4”Top Bolts)(Round Top)(3:00 Starter)(14 Holes To Engine) (3.6L)	1	
78750F	Bell Housing, 722.6 (Chrysler) (Square Top)(3:00 Starter)(12 Holes To Engine)(2.7L Diesel) (2 Square Holes At 6:00)	1	
78750FA	Bell Housing, 722.6 (Mercedes) (Square Top)(3:00 Starter)(12 Holes To Engine) (Supercharged1.8L)(2 Square Holes At 6:00)	1	
78750FB	Bell Housing, 722.6 (Square Top)(3:00 Starter)(12 Holes To Engine)	1	
78750G	Bell Housing, 722.6 (Chrysler) (Round Top)(Starter At 3:00 & 9:00)(12 Holes To Engine) (3.0L Diesel & 3.5L)(2 Large Round Holes At 6:00 & 11:00)	1	
78750P	Bell Housing, 722.6 (Porsche) (Round Top)(AWD)(911)(3.6L)(2 Axle Shafts Holes) (14 Holes To Engine)	1	
78760A	Case, 722.6 (Mercedes) 2WD (5/8”OD Filler Tube Hole) 1996-Up (Has A Sensor On Rear Of Case)(Cast # 140 27 28 01)	1	
78760AC	Case, 722.6 (Mercedes) 2WD (5/8”OD Filler Tube Hole) 1996-Up (Has A Sensor On Rear Of Case) (Cast # 901 271 00 01)	1	
78760C	Case, 722.6 (Chrysler) 4x4 (1 3/16”OD Filler Tube Hole) 2004-Up (Has 12 Rear Bolt Holes For Extention Housing Adapter)	1	
78760CC	Case, 722.6 (Chrysler) 2WD (1 3/16”OD Filler Tube Hole) 2004-Up (Cast # 103AA-03 And # 103AA-E)	1	
78765A	Pan, 722.6 (Mercedes) Bottom (With Drain Plug) 1996-Up	1	
78765C	Pan, 722.6 (Chrysler) Bottom (No Drain Plug) 2004-Up	1	
78770C	Extention Housing Adapter, 722.6 (Chrysler) 4x4 (Aluminum) (4 13/16” Long) 2004-Up (Cast # 52108571AA) (12 Bolts To Case)	1	
78776AK	Bolt Set, 722.6 Bell Housing To Case (26 Pieces) 1996-Up	1	
78778AK	Bolt Set, 722.6 Stator To Body (7 Pieces) 1996-Up	1	
78779AK	Bolt Set W/Retainers, 722.6 Pan To Case (6 Pieces) 1996-Up	1	
78781CK	Bolt Set, 722.6 (Chrysler) 4x4 Extention Housing Adapter To Case (12 Pieces) 1996-Up	1	
78782AK	Bolt Set, 722.6 Valve Body To Case (10 Pieces) 1996-Up	1	
78784AK	Bolt Set, 722.6 (Mercedes) Front Planet To Shell (3 Pieces) 1996-Up	1	
78784CK	Bolt Set, 722.6 (Chrysler) Front Planet To Shell (4 Pieces) 2004-Up	1	
78790AK	Bolt Set, 722.6 B2 Clutch Support To Case (2 Pieces) 1996-Up	1	
78798A	Nut, 722.6 Yoke To Output Shaft (12 Point) 1996-Up	1	
78841A	Yoke, 722.6 (Mercedes) 2WD Output Shaft (3 Bolt) 1996-Up (1.650”OD At The Seal Surface)	1	
78841CA	Yoke Sleeve, 722.6 (Chrysler) 4x4 Output Shaft To Transfer Case (1.650”OD Where Seal Rides & 2.665”OD On Other End) 2004-Up	1	
78861AA	Snap Ring, 722.6 Holds Pressure Plate In K2 Drum (.086”) 1996-Up	1	
78861AB	Snap Ring, 722.6 Holds Pressure Plate In K2 Drum (.100”) 1996-Up	1	
78861AC	Snap Ring, 722.6 Holds Pressure Plate In K2 Drum (.112”) 1996-Up	1	

MERCEDES

© Whatever It Takes Transmission Parts. Inc.

78861AD.....Snap Ring, 722.6 Holds Pressure Plate In K2 Drum (.124") 1996-Up.....1
78861AE.....Snap Ring, 722.6 Holds Pressure Plate In K2 Drum (.135") 1996-Up.....1
78862A.....Snap Ring, 722.6 Holds K2 Retainer In Drum 1996-Up.....1
78864AA.....Snap Ring, 722.6 Holds Pressure Plate In K3 Drum (.074") 1996-Up.....1
78864AB.....Snap Ring, 722.6 Holds Pressure Plate In K3 Drum (.086") 1996-Up.....1
78864AC.....Snap Ring, 722.6 Holds Pressure Plate In K3 Drum (.098") 1996-Up.....1
78864AD.....Snap Ring, 722.6 Holds Pressure Plate In K3 Drum (.110") 1996-Up.....1
78864AE.....Snap Ring, 722.6 Holds Pressure Plate In K3 Drum (.122") 1996-Up.....1
78865A.....Snap Ring, 722.6 Holds K3 Clutch Piston Retainer In 1996-Up.....1
78866A.....Snap Ring, 722.6 Holds F2 Sprag In Rear Planet 1996-Up.....1
78873AA.....Snap Ring, 722.6 Holds B2 Clutch Pressure Plate In Housing (.110") 1996-Up.....1
78873AB.....Snap Ring, 722.6 Holds B2 Clutch Pressure Plate In Housing (.122") 1996-Up.....1
78873AC.....Snap Ring, 722.6 Holds B2 Clutch Pressure Plate In Housing (.134") 1996-Up.....1
78873AD.....Snap Ring, 722.6 Holds B2 Clutch Pressure Plate In Housing (.146") 1996-Up.....1
78873AE.....Snap Ring, 722.6 Holds B2 Clutch Pressure Plate In Housing (.158") 1996-Up.....1
78874A.....Snap Ring, 722.6 Holds B2 Clutch Piston Retainer In 1996-Up.....1
78878A.....Use U78885.....1
78879A.....Snap Ring, 722.6 Holds K1 Clutch Retainer In Drum 1996-Up.....1
78881A.....Snap Ring, 722.6 Holds F1 Sprag To K1 Drum (2.395"OD) (Both Sides) 1996-Up.....1
78882A.....Snap Ring, 722.6 Holds Rear Planet Ring Gear To K2 Drum 1996-Up.....1
78885AA.....Snap Ring, 722.6 Holds Pressure Plate On Stator (.098") 1996-Up.....1-2
.....(Also Fits 722.6 Holds Pressure Plate In K1 Drum (Selective) 1996-Up).....
78885AB.....Snap Ring, 722.6 Holds Pressure Plate On Stator (.110") 1996-Up.....1-2
.....(Also Fits 722.6 Holds Pressure Plate In K1 Drum (Selective) 1996-Up).....
78885AC.....Snap Ring, 722.6 Holds Pressure Plate On Stator (.122") 1996-Up.....1-2
.....(Also Fits 722.6 Holds Pressure Plate In K1 Drum (Selective) 1996-Up).....
78885AD.....Snap Ring, 722.6 Holds Pressure Plate On Stator (.134") 1996-Up.....1-2
.....(Also Fits 722.6 Holds Pressure Plate In K1 Drum (Selective) 1996-Up).....
78885AE.....Snap Ring, 722.6 Holds Pressure Plate On Stator (.146") 1996-Up.....1-2
.....(Also Fits 722.6 Holds Pressure Plate In K1 Drum (Selective) 1996-Up).....
78886A.....Retainer, 722.6 B1 Clutch Spring (Stepped) (5.385"OD) 1996-Up.....1
78888A.....Snap Ring, 722.6 Holds Rear Sun Gear To Center Sun Gear (W/2 Eyelets) 1996-Up.....1
78889A.....Snap Ring, 722.6 (Mercedes) Holds Center Planet Ring Gear To Rear Planet
.....(.077" Thick) (5.220"OD) 1996-Up.....1
78889C.....Snap Ring, 722.6 (Chrysler) Holds Center Planet Ring Gear To Rear.....1
.....Planet (.075" Thick) (5.437"OD) 2004-Up
78892AA.....Snap Ring, 722.6 Holds B3 Clutch Pressure Plate In Case (.124") 1996-Up.....1
78892AB.....Snap Ring, 722.6 Holds B3 Clutch Pressure Plate In Case (.135") 1996-Up.....1
78892AC.....Snap Ring, 722.6 Holds B3 Clutch Pressure Plate In Case (.147") 1996-Up.....1
78892AD.....Snap Ring, 722.6 Holds B3 Clutch Pressure Plate In Case (.157") 1996-Up.....1
78892AE.....Snap Ring, 722.6 Holds B3 Clutch Pressure Plate In Case (.169") 1996-Up.....1
78892AF.....Snap Ring, 722.6 Holds B3 Clutch Pressure Plate In Case (.181") 1996-Up.....1
78894A.....Snap Ring, 722.6 Holds K3 Clutch Drum To Center Sun Gear 1996-Up (W/2 Eyelets).....1
78895A.....Snap Ring, 722.6 Holds Ball Bearing In Case (.081"Thick) 1996-Up.....1
78960A.....Piston, 722.6 (Mercedes) K2 Clutch (1.775" Thick) (Steel) 1996-Up.....1
78960C.....Piston, 722.6 (Chrysler) K2 Clutch (1.595" Thick) (Steel) 2004-Up.....1
78961A.....Piston, 722.6 K3 Clutch (Aluminum) (Cast # 140 272 19 31) 1996-Up.....1
78962A.....Piston, 722.6 B2 Clutch (Outer) (Cast # 140 272 20 31) 1996-Up (1.375" Thick) 3.150"ID
.....(5.900"OD).....1
78962B.....Piston, 722.6 B2 Clutch (Inner) (Cast # 140 272 07 32) 1996-Up (.800" Thick) 2.400"ID
.....(4.700"OD) With Check Ball.....1
78965A.....Piston, 722.6 K1 Clutch (Aluminum) 2.205" Thick (Cast # 140 272 1431) 1996-Up.....1
78967A.....Piston, 722.6 (Mercedes) B1 Clutch (Bonded) .700" Thick (6 5/8"OD) 36 Legs
.....(Uses A Double Sided Friction) 1996-Up.....1
78967C.....Piston, 722.6 (Chrysler) B1 Clutch (Bonded) .877" Thick (6 5/8"OD) 36 Legs
.....(Uses A 1 Sided Friction) 2004-Up.....1
78970A.....Spring, 722.6 K2 Clutch Piston Return (10 Fingers) 1996-Up.....1
78971A.....Spring, 722.6 K3 Clutch Piston Return (20 Fingers) 1996-Up.....1
78972A.....Spring, 722.6 B2 Clutch Piston Return (10 Fingers) 1996-Up.....1
78975A.....Spring, 722.6 K1 Clutch Piston Return (10 Fingers) 1996-Up.....1
78977A.....Spring, 722.6 B1 Clutch Return (36 Outer Fingers) (.053"Thick) 1996-Up.....1
78980A.....Retainer, 722.6 K2 Piston (Steel) (4.545"OD) 1996-Up.....1
78982A.....Retainer, 722.6 B2 Clutch Piston Spring (2 Tabs) 1996-Up.....1
78985A.....Retainer, 722.6 K1 Clutch Return Spring (5.176"OD) 1996-Up.....1
78991A.....Linkage Assembly, 722.6 (Mercedes) Internal (7 Pieces With Sensor) 1996-Up.....1
78991C.....Linkage Assembly, 722.6 (Chrysler) (4 Pieces, No Sensor) 2004-Up.....1
78992A.....Shift Lever, 722.6 (Mercedes) External (Straight With Grommet) 1996-Up.....1
78992C.....Shift Lever, 722.6 (Chrysler) External (Off Set With Grommet) 2004-Up.....1
78995A.....Park Pawl Assembly, 722.6 (5 Pieces) 1996-Up.....1

© Whatever It Takes Transmission Parts. Inc.

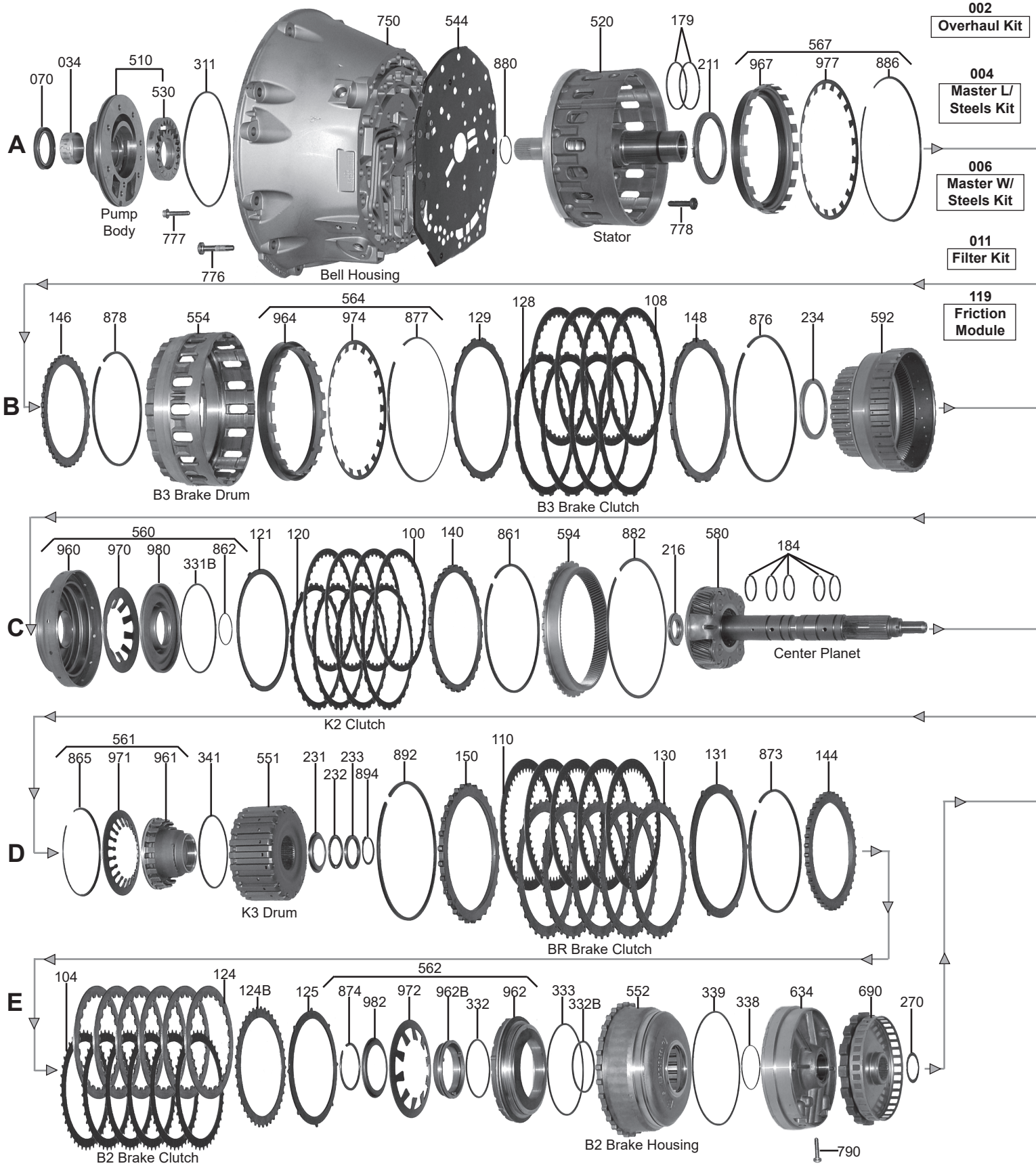

MERCEDES

© Whatever It Takes Transmission Parts. Inc.

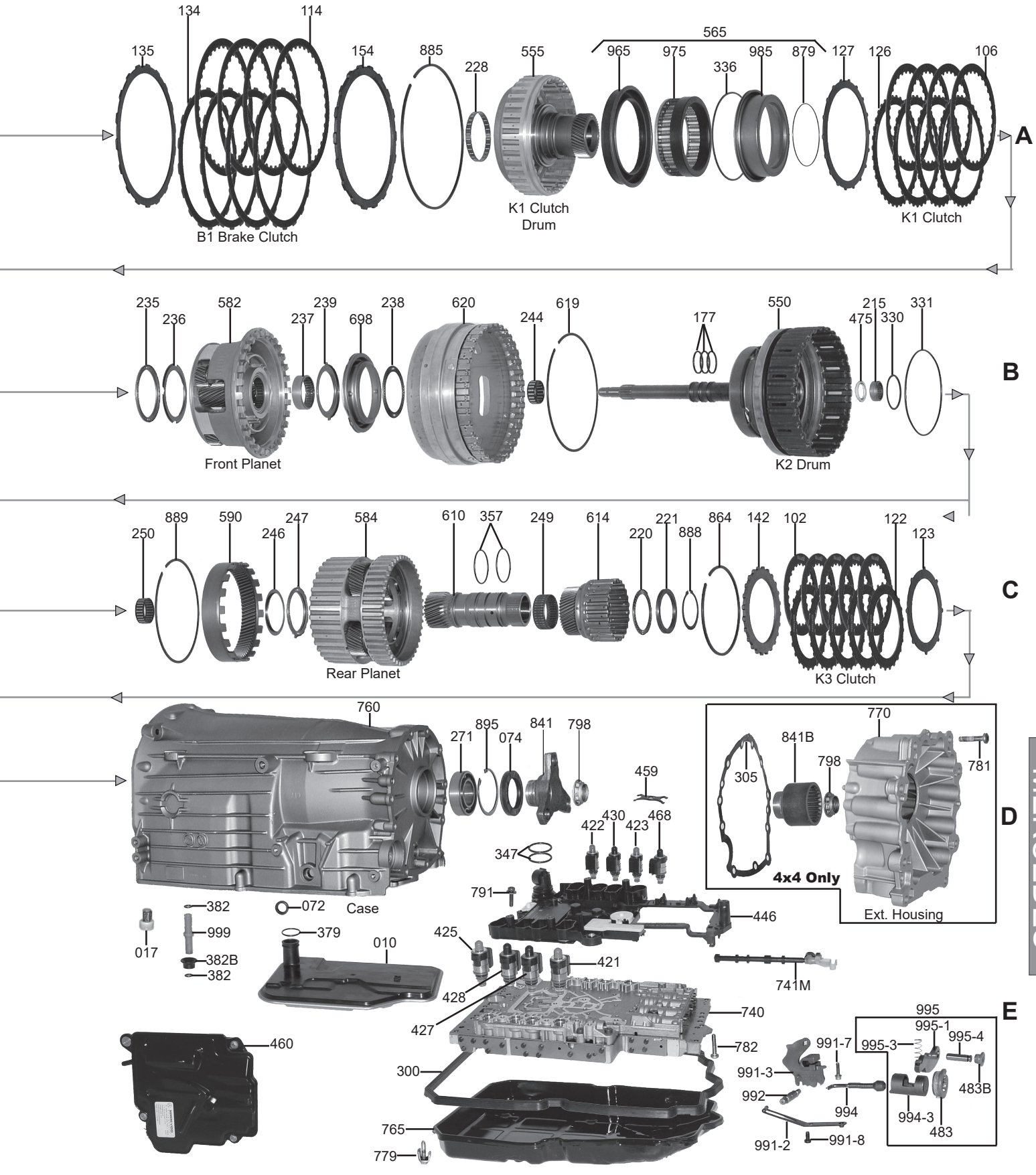

MERCEDES

1-800-940-0197

© Whatever It Takes Transmission Parts. Inc.

PART #	OVERHAUL KIT	QTY	REFERENCE #
288002A	Overhaul Kit, 722.9 (Mercedes) 7 Speed RWD 2004-Up	1	

PART #	MASTER L/STEELS KIT	QTY	REFERENCE #
288004A	Master L/Steels Kit, 722.9 (Mercedes) 7 Speed RWD 2004-Up	1	

PART #	MASTER W/STEELS KIT	QTY	REFERENCE #
288006A	Master W/Steels Kit, 722.9 (Mercedes) 7 Speed RWD 2004-Up	1	

PART #	FILTERS	QTY	REFERENCE #
288010A	Filter, 722.9 (Mercedes) 2004-Up	1	
288011AW	Filter Kit, 722.9 (Filter W/Molded Rubber Pan Gasket) 2004-Up	1	
288017A	Screen, 722.9 Under Valve Body In Case Near Filter Inlet (Plastic)(.995"Long) 2004-Up	1	

PART #	BUSHINGS	QTY	REFERENCE #
288034A	Use 68034B	1	
68034B	Bushing, 722.9 Front Pump Body (1.690"ID)	1	
78038C	Bushing, 722.9 K2 Drum (Rear)(Replaces The #215 Bearing)	1	

PART #	METAL CLAD SEALS	QTY	REFERENCE #
288070A	Use 68070B	1	
68070B	Seal, 722.9 Front	1	
288072A	Use 68072B	1	
68072B	Seal, 722.9 Linkage Shaft (.710"OD)(.469"ID)	1	
78074A	Seal, 722.9 Rear (.322" Thick)(2.445" OD) 2004-Up	1	

PART #	FRICTIONS	QTY	REFERENCE #
288100A	Friction, 722.9 K2 Clutch (.083")(36 Internal Teeth)(6 5/8"OD)(1 Sided) 2004-Up	4	
288102A	Use 78102C	5	
78102C	Friction, 722.9 (Mercedes) K3 Clutch (.082")(24 Teeth, Internal) 2004-Up	5	
78104A	Friction, 722.9 BR Brake Clutch (.064")(40 External Teeth)(5.215"ID) 2004-Up	6	
288106A	Friction, 722.9 K1 Clutch (.075")(30 Internal Teeth)(5.844"OD)(1 Sided) 2004-Up	4	
288108A	Use 288114A	4	
78110A	Friction, 722.9 BR Brake Clutch (.065")(46 Teeth)(7 1/8"OD) 2004-Up	5	
288114A	Friction, 722.9 B1 Brake Clutch (.083")(36 Internal Teeth)(7 1/2"OD)(1 Sided) 2004-Up (Also Fits 722.9 B3 Brake Clutch # 108 2004-Up)	8	
288119A	Friction Module, 722.9 (Mercedes) 2004-Up	1	

PART #	STEELS	QTY	REFERENCE #
288120A	Friction, 722.9 K2 Clutch (.082")(30 External Teeth)(6.005"ID)(1 Sided) 2004-Up	4	
288121A	Steel, 722.9 K2 Clutch (Bottom)(.083")(3 Teeth)(6.010"ID)(Beveled) 2004-Up	1	
288122A	Use 78122C	5	
78122C	Friction, 722.9 (Mercedes) K3 Clutch (.082")(24 Teeth, External) 2004-Up	5	
288123A	Steel, 722.9 K3 Clutch (Bottom)(.070")(8 Teeth)(3.455"ID)(Beveled) 2004-Up	1	
78124A	Steel, 722.9 B2 Brake Clutch # 124 (.070")(24 Internal Teeth)(6 1/8"OD) 2004-Up	1	
78124AA	Steel, 722.9 B2 Brake Clutch (.069")(40 External Teeth)(5.215"ID) 2004-Up	1	
288125A	Steel, 722.9 B2 Brake Clutch (.095")(8 Teeth)(5.220"ID)(Beveled) 2004-Up	1	
288126A	Friction, 722.9 K1 Clutch (.076")(36 External Teeth)(5.020"ID)(1 Sided) 2004-Up	4	
288127A	Steel, 722.9 K1 Clutch (.080")(18 Teeth)(5.020"ID)(Beveled) 2004-Up	1	
288128A	Use 288134A	4	
288129A	Use 288135A	1	
78130A	Steel, 722.9 BR Brake Clutch (.070")(30 Teeth)(6 1/8"OD) 2004-Up	5	
288131A	Steel, 722.9 BR Brake Clutch (.133")(6 Teeth)(6.140"ID)(Beveled) 2004-Up	1	
288134A	Friction, 722.9 B1 Brake Clutch (.083")(18 External Teeth)(6 11/16"ID)(1 Sided) 2004-Up (Also Fits 722.9 B3 Brake Clutch # 128 2004-Up)	8	
288135A	Steel 722.9 B1 Brake Clutch (.075")(18 Teeth)(6 11/16"ID)(Beveled) 2004-Up (Also Fits 722.9 B3 Brake Clutch # 129)	1	

PART #	PRESSURE PLATES	QTY	REFERENCE #
288140A	Pressure Plate, 722.9 K2 Clutch (.155")(30 Teeth)(6.005"ID) 2004-Up	1	
288142A	Pressure Plate, 722.9 K3 Clutch (.156")(24 Teeth)(3.465"ID) 2004-Up	1	

© Whatever It Takes Transmission Parts. Inc.

288144A ..... Pressure Plate, 722.9 B2 Brake Clutch (.255")(40 Teeth)(5.220"ID) 2004-Up 1
288146A ..... Pressure Plate, 722.9 K1 Clutch (.155")(36 Teeth)(5.020"ID) 2004-Up 1
288148A ..... Use 288154A 1
288150A ..... Pressure Plate, 722.9 BR Brake Clutch (.255")(30 Teeth)(6.100"ID) 2004-Up 1
288154A ..... Pressure Plate, 722.9 B1 Brake Clutch (.155")(18 Teeth)(6 11/16"ID) 2004-Up (Also Fits 722.9 B3 Brake Clutch # 148) 1

PART #	SEALING RINGS	QTY	REFERENCE #

288177AT ..... Ring, 722.9 Input Shaft (.092" Thick)(1.205"OD)(Teflon) 2004-Up 3
288179AT ..... Ring, 722.9 Stator To K1 Drum (.088" Thick)(2.560"OD)(Teflon) 2004-Up 2
288184AT ..... Ring, 722.9 Output Shaft (.090" Thick)(1.375"OD)(W/8 TabsOn The ID)(Teflon) 2004-Up 4

PART #	WASHERS & BEARINGS	QTY	REFERENCE #

288211A ..... Bearing W/Races, 722.9 Stator To K1 Drum (.175" Thick)(3.926"OD)(3.174"ID)(Stepped) (W/2 Ears) 2004-Up 1
78215C ..... Caged Needle Bearing, 722.9 K2 Drum (Rear)(HK2210) 2004-Up 1
S78215CK ..... Caged Needle Bearing W/Teflon Seal, 722.9 K2 Drum (Rear) 2004-Up 1
288216A ..... Bearing W/Races, 722.9 K2 Drum To Center Planet (.160" Thick)(1.780"OD)(1.030"ID) 2004-Up 1
288220A ..... Bearing W/Race, 722.9 Rear Sun Gear To K3 Clutch Drum (.110" Thick)(2.460"OD)(1.907"ID) 2004-Up 1
288221A ..... Race, 722.9 Rear Sun Gear To K3 Clutch Drum (.175" Thick)(2.405"OD)(1.905"ID) 2004-Up 1
288228A ..... Caged Needle Bearing, 722.9 Inside K1 Clutch Drum (Front)(.308" Wide)(2.830"OD)(Plastic Cage) 2004-Up 1
288231A ..... Race, 722.9 K3 Clutch Drum To Rear Support (.040" Thick)(2.197"OD)(1.407"ID)(Stepped) 2004-Up 1
288232A ..... Bearing, 722.9 K3 Clutch Drum To Rear Support (.078" Thick)(1.842"OD)(1.385"ID) 2004-Up 1
288233A ..... Race, 722.9 K3 Clutch Drum To Rear Support (.131" Thick)(1.823"OD)(1.390"ID) 2004-Up 1
288234A ..... Bearing W/Races, 722.9 K1 Clutch Drum To Front Planet Ring Gear (.145" Thick)(3.280"OD) (2.685"ID) 2004-Up 1
288235A ..... Bearing W/Race, 722.9 Sun Gear To Front Planet (.108" Thick)(3.130"OD)(2.535"ID) 2004-Up 1
288236A ..... Race, 722.9 Sun Gear To Front Planet (.076" Thick)(3.265"OD)(2.485"ID)(Stepped)(W/4 Outer Notches) 2004-Up 1
288237A ..... Caged Needle Bearing, 722.9 Front Planet (1.865"OD)(1.655"ID) 2004-Up 1
288238A ..... Bearing, 722.9 Front Planet To K2 Drum (.078" Thick)(2.858"OD)(2.190"ID) 2004-Up 1
288239A ..... Race, 722.9 Front Planet (Rear) (.102" Thick)(2.928"OD)(2.155"ID)(Stepped)(W/2 Ears) 2004-Up 1
288244A ..... Caged Needle Bearing, 722.9 Input Shaft To Stator Shaft (Plastic Cage)(.500" Thick)(1.265"OD) 2004-Up 1
288246A ..... Race, 722.9 Center Planet To Rear Planet (.030" Thick)(2.550"OD)(2.048"ID) 2004-Up 1
288247A ..... Bearing W/Race, 722.9 Center Planet To Rear Planet (.110" Thick)(.670"OD)(2.055"ID)(W/2 Ears) 2004-Up 1
288249A ..... Caged Needle Bearing, 722.9 Inside Rear Sun Gear (.695" Thick)(1.880"OD)(Plastic Cage) 2004-Up 1
288250A ..... Caged Needle Bearing, 722.9 Rear Planet Output Shaft To Sun Gear (.500" Thick)(1.340"OD) (Plastic Cage) 2004-Up 1
288270A ..... Shim, 722.9 Parking Gear To Output Bearing (.020" Thick)(1.650"OD)(1.270"ID) 2004-Up 1
288271A ..... Ball Bearing, 722.9 Output Shaft To Case (.628" Thick)(2.440"OD)(1.260"ID) (Cast # INA 6206 E AH01) 2004-Up 1

PART #	GASKETS & RUBBER COMPONENTS	QTY	REFERENCE #

288300AW ..... Gasket, 722.9 (Mercedes) Pan (Molded) 2004-Up 1
288305A ..... Gasket, 722.9 4X4 Extension Housing To Case (11 Bolt)(Metal) 2004-Up 1
78311A ..... O-Ring, 722.9 Pump Body To Bell 1
288379A ..... Boot, 722.9 Filter Seal 2004-Up 1

PART #	ELECTRICAL COMPONENTS	QTY	REFERENCE #

288421A ..... Solenoid, 722.9 B2 Brake (Green Top)(Cast # 0 260 130 034) 2004-Up (Also Fits 722.9 K1 Clutch #422, And B3 Brake #423, And TCC Lock-Up #425) 1-4
288422A ..... Use 288421A 1
288423A ..... Use 288421A 1
288425A ..... Use 288421A 1
288427A ..... Solenoid, 722.9 K2 Clutch (Black Top)(Cast # 0 260 130 035) 2004-Up (Also Fits 722.9 Pressure Control #428, And B1 Brake #430, And K3 Clutch #468) 1-4
288428A ..... Use 288427A 1
288430A ..... Use 288427A 1

© Whatever It Takes Transmission Parts. Inc.

PART #	ELECTRICAL COMPONENTS	QTY	REFERENCE #
288446A	Circuit Board Harness, 722.9 Internal (5 Pin Round Connector)(Plastic) (Cast # VDO A 033 545 73 32) 2004-Up	1	
288459A	Bracket, 722.9 Holds 2 Solenoids On Valve Body 2004-Up	4	
288460A	Shift Motor, 722.9(4 Bolts to Case)(5 Blade Conn)(Cast # 5218)2004-Up	1	
288468A	Use 288427A	1	

PART #	MISCELLANEOUS COMPONENTS	QTY	REFERENCE #
78475C	Teflon Sleeve, 722.9 Under # 215 Bearing In K2 Drum 2004-Up	1	
288483A	Plug, 722.9 Park Actuator Sleeve (1.675"OD) 2004-Up	1	
288483B	Plug, 722.9 Park Pawl Pin (.930"OD) 2004-Up	1	

PART #	HARDPARTS	QTY	REFERENCE #
288510A	Pump Body W/Gears, 722.9 (23 Teeth Outer, 19 Teeth Inner Pump Gears)(.502" Thick Gears) (Cast # 220277) 2004-Up (Use 78510A)	1	
78510A	Pump Body W/Gears, 722.9 (5.980"OD)(.502" Thick Gears)(Cast Iron) 2004-Up	1	
288520A	Stator Shaft W/Housing, 722.9 (Cast # 200300040 & R220 272 42 24) 2004-Up	1	
288544A	Plate, 722.9 (Pump) Bell Housing To Case (Tin)(.040" Thick) 2004-Up	1	
288544E	Pump Wear Plate, 722.9 (Aftermarket Fix For Pump Body To Bell Housing)(Fixes Wear From The Pump Gears)	1	
288550A	Drum W/Shaft, 722.9 K2 Clutch (With 86 Teeth Front Planet Ring Gear)(15 3/4"Tall)(3 Ring Input Shaft) 2004-Up	1	
288551A	Drum, 722.9 K3 Clutch (5 Clutch, Stamped Steel)(2.345" Tall)(5.055"OD) 2004-Up	1	
288552A	Housing, 722.9 B2 Brake Clutch (Aluminum)(6 Clutch)(3.025" Tall)(2.555"ID) (Cast # 220 272 25 31) 2004-Up	1	
288552AA	Housing, 722.9 B2 Brake Clutch (Aluminum)(5 Clutch)(3.335" Tall)(2.555"ID) (Cast # 220 272 25 31) 2004-Up	1	
288554A	Retainer, 722.9 B3 Brake Clutch (Aluminum)(4 Clutch)(3.035" Thick)(Cast # 21100-01-01 & A220 2702 02 24 3 35 2) 2004-Up	1	
288555A	Drum, 722.9 K1 Clutch (Aluminum, 4 Clutch)(With 42 Teeth Sun Gear) (Cast #DGS 1700211-3.1 226) 2004-Up	1	
288560A	Piston Kit, 722.9 K2 Clutch (Contains: # 960, 970, 980, &862) 2004-Up	1	
288561A	Piston Kit, 722.9 K3 Clutch (Contains: # 865, 971, 961) 2004-Up	1	
288562A	Piston Kit, 722.9 B2 Brake Clutch (Contains; # 962A, 962B, 972A982A, 874A) 2004-Up	1	
288564A	Piston Kit, 722.9 B3 Brake Clutch (Bonded Piston)(Contains:# 964, 974, 877) 2004-Up	1	
288565A	Piston Kit, 722.9 K1 Clutch (Bonded Piston)(Contains;# 965, 975, 985, & 879) 2004-Up	1	
288567A	Piston Kit, 722.9 B1 Brake Clutch (Contains; # 967, 977, & 886) 2004-Up	1	
288580A	Planet, 722.9 Center W/Output Shaft(Uses A 28 Tooth Sun Gear)(13 1/2"Long)(4 Ring Shaft) 2004-Up	1	
288582A	Planet, 722.9 Front (Aluminum Housing) (4 Long Gears & 4 Short Gears)(30 Outer Lugs) (Uses A 42 Tooth Sun Gear) 2004-Up	1	
288584A	Planet, 722.9 Rear (4 Gear) (Aluminum Housing)(Uses A 46 Tooth Sun Gear) (Cast # R220 272 0705) 2004-Up	1	
288590A	Ring Gear, 722.9 Center Planet (76 Teeth)(1.280" Thick)(5.430"OD)(18 Rear Lugs) 2004-Up	1	
288592A	Ring Gear, 722.9 Front Planet (110 Teeth Gear)(30 Teeth & 36 Teeth Clutch Hub)(6 9/16"OD) 2004-Up	1	
288594A	Ring Gear, 722.9 Rear Planet (114 Teeth)(36 Outer Lugs)(.840" Thick)(7 3/8"OD) 2004-Up	1	
288610A	Sun Gear, 722.9 Center Planet (28 Teeth)(5.575" Long)(2.000"OD)(W/2 O-Rings) 2004-Up	1	
288614A	Sun Gear, 722.9 Rear Planet (46 Teeth)(2.895" Thick)(2.615"OD)(1.915"ID)(24 Teeth Clutch Hub) 2004-Up	1	
288619A	Spacer Ring, 722.9 Front Planet To K2 Drum (.076" Thick)(6 3/8"OD)(Steel)(Looks Like A Snap Ring) 2004-Up	1	
288620A	Drive Shell, 722.9 (4.030"Tall) (30 Square Holes For Front Planet)(36 Lugs For Rear Planet Ring Gear) 2004-Up	1	
288634A	Support, 722.9 B2 Brake Clutch Housing (Cast # A220 270 02 68)(W/Steel Sleeve Inside) (6 11/16"OD)(1.398"ID)(Aluminum) 2004-Up	1	
288690A	Parking Gear, 722.9 (16 Lugs)(With 36 Slot Reluctor) 2004-Up	1	
288698A	Retainer, 722.9 Crimped Onto The Front Planet (Rear)(Tin)(.720" Thick)(4.345"OD)(2.860"ID) 2004-Up	1	
288740A	Valve Body Assembly, 722.9 (W/8 Solenoids)(10 Bolts To Case)(Cast # R220 277 14 01, & R220 277 08 01) 2004-Up	1	
288741M-1	Manual Valve, 722.9 Valve Body (7 1/8"Long)(Plastic End) 2004-Up	1	
288750A	Bell Housing, 722.9 (6" Top Bolts) (Cast # R211 271 08 01 @ 2.2) 2004-Up	1	
288760A	Case, 722.9 (Cast # R164 271 13 01) 2004-Up	1	
288760B	Case, 722.9 (4WD) 2004-Up	1	
288765A	Pan, 722.9 Bottom 2004-Up	1	
288770AC	Extension Housing, 722.9 4X4 (11 Bolts To Case)(8 Bolts To Transfer Case) 2004-Up	1	

MERCEDES

© Whatever It Takes Transmission Parts. Inc.

288776AK.....Bolt Set, 722.9 Bell Housing To Case (17 Pieces) 2004-Up .....1 .....
288777AK.....Bolt Set, 722.9 Stator To Bell Housing (11 Pieces) 2004-Up .....1 .....
288778AK.....Bolt Set, 722.9 Stator To Body (7 Pieces) 2004-Up .....1 .....
288779A .....Bolt, 722.9 (Mercedes) Pan (Aluminum & Is Recommended To Be Replaced)(Takes 6 Per
.....Transmission) 2004-Up .....6 .....
288781AK.....Bolt Set, 722.9 4X4 Extension Housing To Case (11 Pieces) 2004-Up .....1 .....
288782AK.....Bolt Set, 722.9 Valve Body To Case (10 Pieces) 2004-Up.....1 .....
288790AK.....Bolt Set, 722.9 B2 Brake Clutch Housing Support To Case (2 Pieces) 2004-Up.....1 .....
288791AK.....Bolt Set, 722.9 Circuit Board To Valve Body (11 Pieces) 2004-Up .....1 .....
288798A .....Nut, 722.9 Yoke (12 Point) (.475"Thick)(1.550"OD) 2004-Up .....1 .....
288841A .....Yoke, 722.9 Output Shaft (2.390"Long)(2 Sets Of Splines) 2004-Up.....1 .....
288861A .....Snap Ring, 722.9 Holds K2 Pressure Plate In Drum (.123" Thick)(6 15/16"OD) 2004-Up .....1 .....
288862A .....Snap Ring, 722.9 Holds K2 Clutch Spring Retainer In (.078" Thick)(1.722"OD)(Wire Type)
.....2004-Up .....1 .....
288864A .....Snap Ring, 722.9 Holds K3 Clutch Pressure Plate In Drum (.112" Thick)(4.885"OD) 2004-Up.....1 .....
288865A .....Snap Ring, 722.9 Holds K3 Clutch Return Spring In (.050" Thick)(4.780"OD) 2004-Up .....1 .....
288873A .....Snap Ring, 722.9 Holds B2 Brake Clutch Pressure Plate In Drum (.135" Thick)(6 5/8"OD)
.....2004-Up .....1 .....
288874A .....Snap Ring, 722.9 Holds B2 Brake Clutch Spring Retainer In (.076" Thick)(2.555"OD) 2004-Up ...1 .....
288876A .....Use 288885A.....1 .....
288877A .....Use 288886A.....1 .....
288878A .....Snap Ring, 722.9 Holds K1 Clutch Pressure Plate In Drum (.124" Thick)(6 3/16"OD) 2004-Up ....1 .....
288879A .....Snap Ring, 722.9 Holds K1 Clutch Retainer In (.080" Thick)(3.450"OD) 2004-Up .....1 .....
288880A .....Snap Ring, 722.9 Holds Stator Shaft To B1 Brake Clutch Housing (.056" Thick)(1.537"OD)
.....2004-Up .....1 .....
288882A .....Snap Ring, 722.9 Holds Rear Planet Ring Gear In Shell (.075" Thick)(7 7/16"OD) 2004-Up.....1 .....
288885A .....Snap Ring, 722.9 Holds B1 Brake Clutch Pressure Plate In (.124" Thick)(7 7/8"OD) 2004-Up
.....(Also Fits 722.9 B3 Brake Clutch # 876) .....2 .....
288886A .....Snap Ring, 722.9 Holds B1 Brake Clutch Return Spring In (.055" Thick)(7 13/16"OD)(Stepped)
.....2004-Up (Also Fits 722.9 B3 Brake Clutch # 877) .....2 .....
288888A .....Snap Ring, 722.9 Holds Rear Sun Gear To Output Shaft (.058" Thick)(2.058"OD)(W/2 Eyelets)
.....2004-Up .....1 .....
288889A .....Snap Ring, 722.9 Holds Center Planet Ring Gear To Rear Planet (.074" Thick)(5.650"OD)
.....2004-Up .....1 .....
288892A .....Snap Ring, 722.9 Holds BR Brake Clutch Pressure Plate In (.145" Thick)(7 1/2"OD) 2004-Up .....1 .....
288894A .....Snap Ring, 722.9 Holds K3 Clutch Drum To Output Shaft (.058" Thick)(1.495"OD)(W/2 Eyelets)
.....2004-Up .....1 .....
288895A .....Snap Ring, 722.9 Holds Output Shaft Bearing In Case (.081" Thick)(2.595"OD)(W/2 Eyelets)
.....2004-Up .....1 .....
288960A .....Piston, 722.9 K2 Clutch (1.655" Thick)(6 1/4"OD)(1.890"ID)(Steel) 2004-Up.....1 .....
288961A .....Piston, 722.9 K3 Clutch (1.990" Thick)(3.852"OD)(1.855"ID) 2004-Up .....1 .....
288962A .....Piston, 722.9 B2 Brake Clutch (1.125" Thick)(5.702"OD)(3.135"ID)
.....(Cast # A220 272 26 31 3 DRM 200000026 04) 2004-Up .....1 .....
288962B .....Inner Piston, 722.9 B2 Brake Clutch (Aluminum)(.565" Thick)(3.120"OD)(2.400"ID) 2004-Up .....1 .....
288964A .....Piston, 722.9 B3 Brake Clutch (Bonded)(7 1/2"OD)(6 9/16"ID)(20 Lugs) 2004-Up .....1 .....
288965A .....Piston, 722.9 K1 Clutch (Bonded) (.729" Thick)(5.520"OD)(4.000"ID) 2004-Up.....1 .....
288967A .....Piston, 722.9 B1 Brake Clutch (Bonded)(1.065" Thick)(6 15/16"OD)(5.720"ID)(20 Lugs)
.....2004-Up .....1 .....
288970A .....Spring, 722.9 K2 Clutch Return (.072" Thick)(4.550"OD)(10 Fingers) 2004-Up .....1 .....
288971A .....Spring, 722.9 K3 Clutch Return (.063" Thick)(4.570"OD)(20 Fingers) 2004-Up .....1 .....
288972A .....Spring, 722.9 B2 Brake Clutch Return (.068" Thick)(5.270"OD)(10 Fingers) 2004-Up.....1 .....
288974A .....Use 288977A.....1 .....
288975A .....Spring, 722.9 K1 Clutch Piston Return (30 Springs W/Plastic Housing) 2004-Up.....1 .....
288977A .....Spring, 722.9 B1 Brake Clutch Return (.053" Thick)(7 9/16"OD)(20 Fingers) 2004-Up (Also Fits
.....722.9 B3 Brake Clutch # 974) .....2 .....
288980A .....Retainer, 722.9 K2 Clutch Spring (.525" Thick)(4.765"OD)(1.705"ID) 2004-Up.....1 .....
288982A .....Retainer, 722.9 B2 Brake Clutch Spring (.066" Thick)(3.237"OD)(2.411"ID)(Stepped) 2004-Up....1 .....
288985A .....Retainer, 722.9 K1 Clutch Piston (1.233" Thick)(5.022"OD)(3.430"ID) 2004-Up .....1 .....
288991-2A.....Spring, 722.9 Rooster Comb Detent (4.965"Long) 2004-Up.....1 .....
288991-3A.....Rooster Comb, 722.9 Slotted With Threaded Hole To Tighten To Manual Lever 2004-Up .....1 .....
288991-7A.....Bolt, 722.9 Holds Rooster Comb To Manual Lever 2004-Up .....1 .....
288992A .....Manual Lever, 722.9 External W/Shaft (W/2 Flats) 2004-Up .....1 .....
288994-3A.....Sleeve, 722.9 Park Actuator (1.180"OD)(2.218"Long) 2004-Up .....1 .....
288994A .....Actuator, 722.9 Park Rod (3 9/16"Long)(.660"OD Ball) 2004-Up.....1 .....
288995-1A.....Parking Pawl, 722.9 (4 5/8" Long)(.475"ID Pin Hole) 2004-Up .....1 .....
288995-3A.....Spring, 722.9 Park Pawl (Coil) (.465"OD)(1.425"Long) 2004-Up.....1 .....
288995-4A.....Pin, 722.9 Parking Pawl (.471"OD)(1.670"Long) 2004-Up.....1 .....
288995A .....Park Pawl Assembly, 722.9 (Contains # 995-1, 995-3, 995-4, 483B,994-3, 483A) 2004-Up.....1 .....
288999A .....Oil Tube, 722.9 Valve Body To Stator Shaft Housing (Plastic)(2.085"Long)(.410"OD)(.225"ID)
.....(Uses 2 O-Rings & 1 Boot) 2004-Up .....1 .....

MERCEDES

© Whatever It Takes Transmission Parts. Inc.

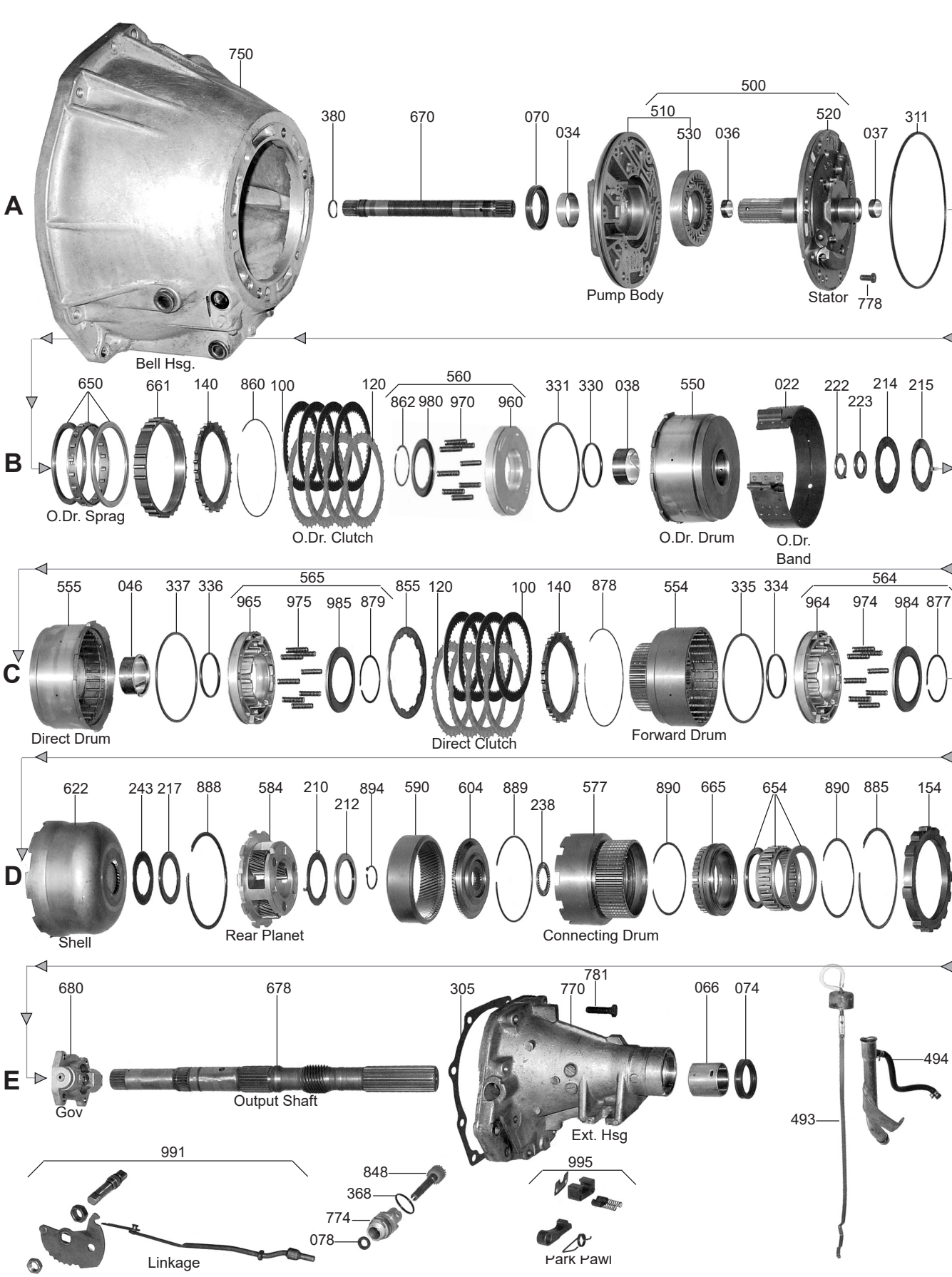

000 P&R Kit
002 OHK Kit
004 Master L/Steels Kit
006 Master W/Steels Kit
011 Filter Kit
119 Friction Module
139 Steel Module
030 Bushing Kit
165 V.B. Kit
175 Ring Kit
400 Tech Manual

NISSAN

L3N71B / L4N71B / E4N71B

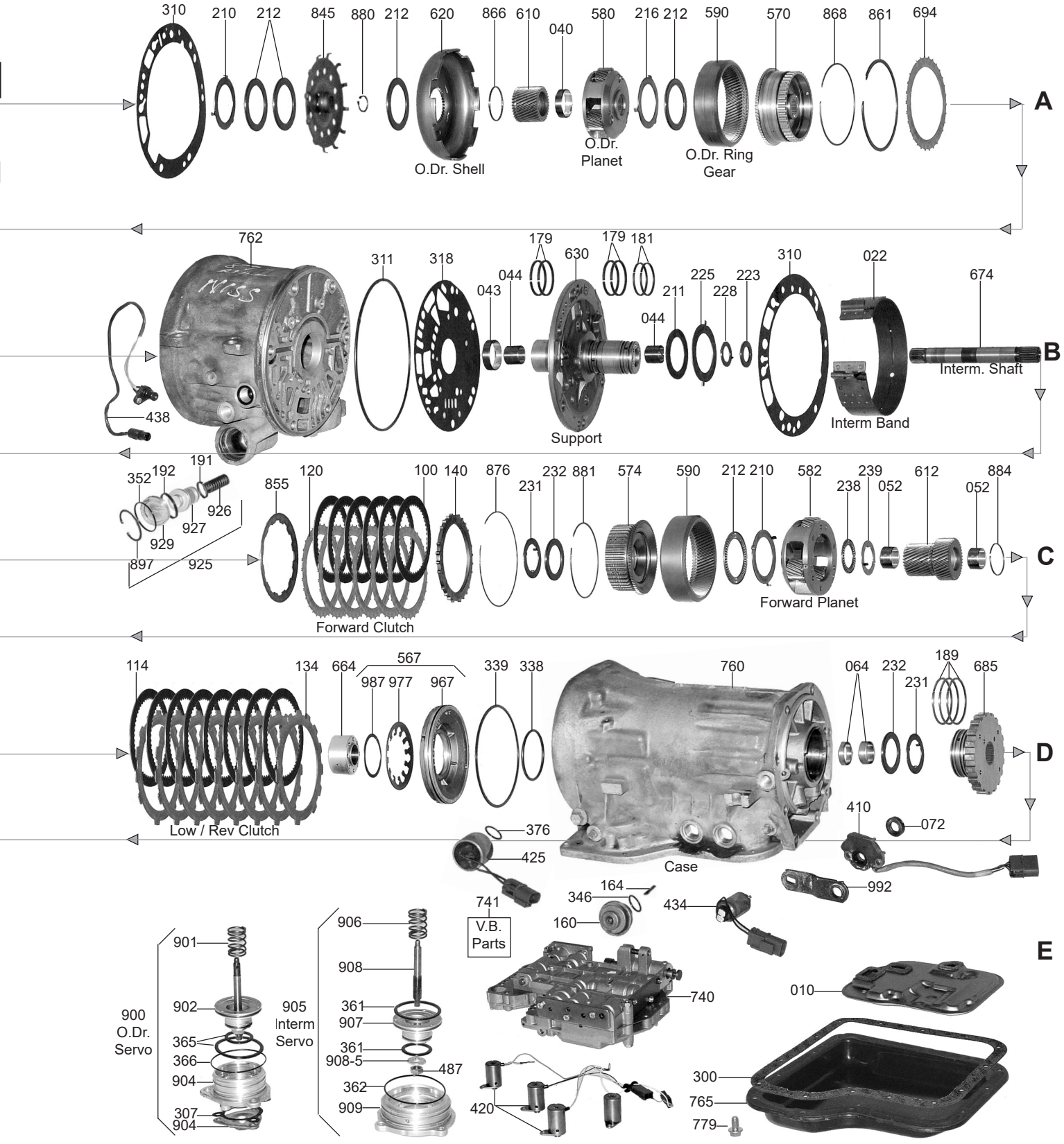

1-800-940-0197

© Whatever It Takes Transmission Parts. Inc.

PART #	PAPER & RUBBER KIT	QTY.	REFERENCE #
53000	Paper & Rubber Kit, L3N71B 1971-87	1	
53000B	Paper & Rubber Kit, L4N71B/E4N71B 1983-Up	1	
53000E	Paper & Rubber Kit, N4A-EL (Mazda) 1988-92	1	

PART #	OVERHAUL KITS	QTY.	REFERENCE #
53002	Overhaul Kit, L3N71B 1971-87	1	
53002B	Overhaul Kit, L4N71B/E4N71B 1983-Up	1	
53002E	Overhaul Kit, N4A-EL (Mazda) 1988-92	1	

PART #	MASTER L/STEEL KIT	QTY.	REFERENCE #
53004	Master L/Steels Kit, L3N71B 1971-87	1	
53004B	Master L/Steels Kit, L4N71B/E4N71B 1983-Up	1	
53004E	Master L/Steels Kit, N4A-EL (Mazda) 1988-92	1	
53004EA	Master L/Steels Kit, N4A-EL (Mazda) 1993-Up	1	

PART #	MASTER W/STEEL KIT	QTY.	REFERENCE #
53006	Master W/Steels Kit, L3N71B 1971-87	1	
53006B	Master W/Steels Kit, L4N71B/E4N71B 1983-Up	1	
53006E	Master W/Steels Kit, N4A-EL (Mazda) 1988-92	1	
53006EA	Master W/Steels Kit, N4A-EL (Mazda) 1993-Up	1	

PART #	FILTER	QTY.	REFERENCE #
53010	Filter, L3N71B (Nissan) 1971-87	1	
53010A	Filter, L3N71B (Ford) 1976-82	1	31728-X0F00
53010B	Filter, L4N71B/E4N71B (Nssan) 183-Up	1	
53010D	Filte, E4N71B /N4A-EL(Mazda,B2600 & 4x) 1989-91		
53010E	FIter, E4N71B / N4A-EL (Mazda 929 & Pick-Up) 1988-95	1	

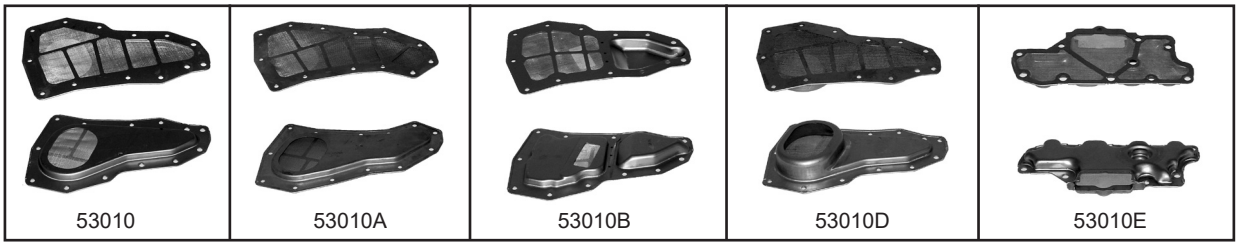

53010 | 53010A | 53010B | 53010D | 53010E

PART #	FILTER KIT	QTY.	REFERENCE #
53011	Filter Kit, L3N71B (Nissan) 1971-87	1	
53011A	Filter Kit, L3N71B (Ford) 1971-87	1	
53011B	Filter Kit, L4N71B / E4N71B (Nissan) 1983-Up	1	
53011D	Filter Kit, E4N71B / N4A-EL (Mazda, B2600 & 4x4) 1989-91	1	
53011E	Filter Kit, E4N71B / N4A-EL (Mazda 929 & Pick-Up) 1988-95	1	

PART #	BANDS	QTY.	REFERENCE #
53022	Band, L3N71B/L4N71B Overdrive & Intermediate (Flex) 1 3/4" Wide	1-2	
53022H	Band, L3N71B/L4N71B Overdrive & Intermediate (Hard Type)	1-2	

PART #	BUSHINGS	QTY.	REFERENCE #
53030	Bushing Kit, L3N71B 1971-87	1	
53030B	Bushing Kit, L4N71B / N4A-EL 1983-Up	1	
53034	Bushing, L3N71B / L4N71B Pump Body	1	48488-7000
53036	Bushing, L3N71B / L4N71B Stator (Front & Rear) (.790" Wide)	2	31353-X010
53036A	Bushing, L4N71B Stator (Center) (.785" Wide With 2 Notches)	1	
53037	Bushing, L4N71B Stator (Front & Rear) (.310" Wide)	1	
53038	Bushing, L4N71B Overdrive Drum	1	
53040	Bushing, L4N71B Overdrive Sun Gear (31 Teeth Type) (1.140"ID)	1	
53040A	Bushing, L4N71B Overdrive Sun Gear (1.220"ID)	1	
53043	Bushing, L4N71B Overdrive Support To Overdrive Ring Gear (Front) Large	1	
53044	Bushing, L4N71B Overdrive Support To Intermediate Shaft (Center & Rear) Small	1-2	

© Whatever It Takes Transmission Parts. Inc.

53046	Bushing, L3N71B / L4N71B Direct Drum	1	31513-X0100
53052	Bushing, L3N71B / L4N71B Forward Sun Gear	2	31462-X0101
53064	Bushing, L3N71B / L4N71B Case (Front) Narrow	1-2	31375-X010
53064B	Bushing, L3N71B / L4N71B Case (Rear) Wide	1	31373-X010
53066	Bushing, L3N71B Extension Housing (1.375”ID) (1.575” Long)	1	
53066A	Bushing, L4N71B Extension Housing (1.495”ID)	1	
53066B	Bushing, N4A-EL Extension Housing (1.375”ID) (2.365” Long)	1	

PART #	METAL CLAD SEALS	QTY.	REFERENCE #
53070	Seal, L3N71B / L4N71B Front	1	80674-2110
53074	Seal, L3N71B Rear (1.375”ID) Without Flange	1	80673-5070
53074A	Seal, L3N71B Rear (1.375”ID) With Flange	1	
53074B	Seal, L4N71B Rear (1.495”ID) Without Flange	1	
73074B	Seal, N4A-EL Rear (With Boot) 1988-92	1	
53074C	Seal, L4N71B Rear (1.495”ID) With Flange	1	
73074C	Seal, L4N71B Adapter Housing 4x4 (Mazda MVP Van)	1	
53074D	Seal, L4N71B Rear (1.430”ID) With Flange	1	

PART #	FRICTION CLUTCH	QTY.	REFERENCE #
53100	Friction, L3N71B / L4N71B Forward, Direct, & Overdrive Clutch (.063”)	9-14	0338-19-500A
53114	Friction, L3N71B / L4N71B Low / Reverse Clutch (.075”)	4-8	45321-0100
53119B	Friction Module, L4N71B 1983-Up	1	

PART #	STEEL CLUTCH	QTY.	REFERENCE #
53120	Steel, L3N71B / L4N71B Forward, Direct, & Overdrive Clutch (.079”) 1971-Up	9-14	45361-0100
53120A	Steel, L3N71B / L4N71B Forward & Direct Clutch (.032”) 1971-Up	AR	
53120EA	Steel, L4N71B Overdrive Clutch (.098”) 1988-92	3	
18126	Steel, L3N71B/L4N71B Forward/Direct/Overdrive Clutch #120 (.063”)1987-93	12-15	
53134	Steel, L3N71B / L4N71B Low / Reverse Clutch (.079”)	4-7	66-X0100
53139B	Steel Module, L4N71B 1983-Up	1	

PART #	CLUTCH PRESSURE PLATES	QTY.	REFERENCE #
53140A	Pressure Plate, L3N71B / L4N71B Forward, Direct, & Overdrive Clutch (.190”)	1-3	
53140B	Pressure Plate, L3N71B / L4N71B Forward, Direct, & Overdrive Clutch (.197”)	1-3	
53140C	Pressure Plate, L3N71B / L4N71B Forward, Direct, & Overdrive Clutch (.205”)	1-3	
53140D	Pressure Plate, L3N71B / L4N71B Forward, Direct, & Overdrive Clutch (.213”)	1-3	
53140E	Pressure Plate, L3N71B / L4N71B Forward, Direct, & Overdrive Clutch (.220”)	1-3	
53140G	Pressure Plate, L3N71B / L4N71B Forward, Direct, & Overdrive Clutch (.236”)	1-3	
53140H	Pressure Plate, L3N71B / L4N71B Forward, Direct, & Overdrive Clutch (.244”)	1-3	
53140J	Pressure Plate, L3N71B / L4N71B Forward, Direct, & Overdrive Clutch (.265”)	1-3	
53140L	Pressure Plate, L3N71B / L4N71B Forward, Direct, & Overdrive Clutch (.295”)	1-3	
53154	Pressure Plate, L3N71B / L4N71B Low / Reverse Clutch (.386”)	1	
53154A	Pressure Plate, L3N71B / L4N71B Low / Reverse Clutch (.394”)	1	
53154B	Pressure Plate, L3N71B / L4N71B Low / Reverse Clutch (.402”)	1	
53154C	Pressure Plate, L3N71B / L4N71B Low / Reverse Clutch (.409”)	1	
53154D	Pressure Plate, L3N71B / L4N71B Low / Reverse Clutch (.417”)	1	
53154E	Pressure Plate, L3N71B / L4N71B Low / Reverse Clutch (.425”)	1	
53154G	Pressure Plate, L3N71B / L4N71B Low / Reverse Clutch (.465”)	1	
53154H	Pressure Plate, L3N71B / L4N71B Low / Reverse Clutch (.472”)	1	
53154HA	Pressure Plate, L3N71B / L4N71B Low / Reverse Clutch (.480”)	1	
53154J	Pressure Plate, L3N71B / L4N71B Low / Reverse Clutch (.488”)	1	
53154K	Pressure Plate, L3N71B / L4N71B Low / Reverse Clutch (.496”)	1	
53154L	Pressure Plate, L3N71B / L4N71B Low / Reverse Clutch (.504”)	1	

PART #	MODULATORS	QTY.	REFERENCE #
13160	Modulators, L3N71B / L4N71B Screw-In (.84” Diaphragm) Turbo	1	
13160A	Modulators, L3N71B / L4N71B Screw-In (.91” Diaphragm) Non-Turbo	1	
53160A	Modulator, N4A-EL Push-In (.91” Diaphragm) (Mazda 929 With DOHC) 1988-Up	1	
53164	Modulator Pin, L3N71B / L4N71B (1.142” Long)	1	31932-X0103
53164A	Modulator Pin, L3N71B / L4N71B (1.161” Long)	1	31932-X0104
53164B	Modulator Pin, L3N71B / L4N71B (1.181” Long)	1	31932-X0100
53164C	Modulator Pin, L3N71B / L4N71B (1.201” Long)	1	31932-X0102
53164D	Modulator Pin, L3N71B / L4N71B (1.220” Long)	1	31932-X0101

© Whatever It Takes Transmission Parts. Inc.

PART #	VALVE BODY KITS	QTY.	REFERENCE #
T53165	Shift Kit, N4A-EL / 929 / RX7 1988-90 (Transgo)	1	SK ® N4AEL

PART #	OIL SEALING RINGS	QTY.	REFERENCE #
53175	Ring Kit, L3N71B 1971-Up	1	
53175B	Ring Kit, L4N71B 1983-Up	1	
53175C	Ring Kit, N4A-EL 1988-Up	1	
53179	Ring, L3N71B / L4N71B Direct & Overdrum Drum (1.732"OD) (Metal)	2-4	31361-X0100
53179T	Ring, L3N71B / L4N71B Direct & Overdrum Drum (1.732"OD) (Teflon)	2-4	
53181	Ring, L3N71B / L4N71B Forward Drum (1.692"OD) (Metal)	2	43611-0100
53189	Ring, L3N71B/L4N71B Governor (Metal)	3	

PART #	WASHERS & BEARINGS	QTY.	REFERENCE #
53210	Race, L3N71B / L4N71B Stator (Rear), Front & Rear Planet (3 Tab)	1-3	0338-19-639
53211	Washer, L3N71B / L4N71B Direct Drum (1.50mm) (.059")	1	D372-70014-F
53211A	Washer, L3N71B / L4N71B Direct Drum (1.70mm) (.067")	1	
53211B	Washer, L3N71B / L4N71B Direct Drum (1.90mm) (.075") (Also Fits Overdrive Drum)	1-2	
53211C	Washer, L3N71B / L4N71B Direct Drum (2.10mm) (.083")	1	
53211D	Washer, L3N71B / L4N71B Direct Drum (2.30mm) (.091")	1	
53211E	Washer, L3N71B / L4N71B Direct Drum (2.50mm) (.098")	1	
53211G	Washer, L3N71B / L4N71B Direct Drum (2.70mm) (.106")	1	31528-X0104
53211J	Bearing W/Race, L4N71B Direct Drum (Use 53212)	1	
53212	Bearing W/Race, L3N71B / L4N71B Forward & Rear Planet & Overdrive Planet (Also Fits Direct Drum)	1-4	
53212A	Bearing W/Races, L3N71B / L4N71B Forward & Rear Planet & Overdrive Planet (1 Piece)	1-3	0338-19-623A
53214	Washer, L4N71B Overdrive Drum To Support (Use 53211B)	1	
53215	Race, L4N71B Overdrive Drum To Overdrive Case (1 Tab)	1	
53216	Race, L4N71B Overdrive Planet (3 Tab)	1	
53216A	Race, L4N71B Overdrive Planet (2 Tab)	1	
53217	Bearing W/Race, L3N71B / L4N71B Shell To Rear Planet	1	
53222	Race, L4N71B Overdrive Hub To Support	1	
53223	Bearing, L3N71B / L4N71B Forward Clutch Drum & Overdrive Hub To Support (1.370"OD)	1-2	
53225	Race, L3N71B / L4N71B Direct Drum To Support (2 Tab)	1	
53228A	Race, L3N71B / L4N71B Forward Drum To Support (2 Tab) 1.2mm (.047")	1	
53228AA	Race, L3N71B / L4N71B Forward Drum To Support (3 Tab) 1.2mm (.047")	1	
53228B	Race, L3N71B / L4N71B Forward Drum To Support (2 Tab) 1.4mm (.055")	1	
53228BA	Race, L3N71B / L4N71B Forward Drum To Support (3 Tab) 1.4mm (.055")	1	
53228C	Race, L3N71B / L4N71B Forward Drum To Support (2 Tab) 1.6mm (.063")	1	
53228CA	Race, L3N71B / L4N71B Forward Drum To Support (3 Tab) 1.6mm (.063")	1	
53228D	Race, L3N71B / L4N71B Forward Drum To Support (2 Tab) 1.8mm (.071")	1	
53228DA	Race, L3N71B / L4N71B Forward Drum To Support (3 Tab) 1.8mm (.071")	1	
53228E	Race, L3N71B / L4N71B Forward Drum To Support (2 Tab) 2.0mm (.079")	1	
53228EA	Race, L3N71B / L4N71B Forward Drum To Support (3 Tab) 2.0mm (.079")	1	
53228G	Race, L3N71B / L4N71B Forward Drum To Support (2 Tab) 2.2mm (.087")	1	
53228GA	Race, L3N71B / L4N71B Forward Drum To Support (3 Tab) 2.2mm (.087")	1	
53231	Race, L3N71B / L4N71B Forward Clutch Hub (Front) & Governor Support (Front)	1-2	
53232	Bearing W/Race, L3N71B / L4N71B Forward Drum To Hub (.110" Thick)	1	31438-X0100
53238	Bearing W/Race, L3N71B / L4N71B Forward Planet To Sun Gear & Rear Hub To Support	1-2	
53239	Race, L3N71B / L4N71B Forward Planet To Sun Gear (3 Tab)	1	
53243	Race, L3N71B / L4N71B Shell (33 Teeth On Sun Gear)	1	
53243A	Race, L3N71B / L4N71B Shell (30 Teeth On Sun Gear)	1	

PART #	GASKETS & RUBBER COMPONENTS	QTY.	REFERENCE #
53300	Gasket, L3N71B / L4N71B Bottom Pan (Nissan) Cork	1	31397-X0102
53300F	Gasket, L3N71B / L4N71B Bottom Pan (Nissan) Farpak	1	
53300A	Gasket, L3N71B Bottom Pan (Ford) Cork	1	
53300AF	Gasket, L3N71B Bottom Pan (Ford) Farpak	1	
53305	Gasket, L3N71B / L4N71B Extension Housing	1	31335-X0100
53310	Gasket, L3N71B Front Pump (Non Lock-Up)	1	31366-X0101
53310A	Gasket, L3N71B Front Pump (W/Lock-Up) (Also Fits L4N71B Overdrive Case To Case (Nissan)	1-2	
53310B	Gasket, L4N71B Pump To Overdrive Case	1	
53311	O-Ring, L3N71B / L4N71B Front Pump & Overdrive Case	1-2	31363-X0100
53318	Gasket, L4N71B Overdrive Case To Case (Nissan) (Use 53310A)	1	
53318A	Gasket, L4N71B Overdrive Case To Case (Mazda)	1	
53352K	O-Ring Kit, L3N71B / L4N71B Update Accumulator & Oil Distribution Sleeve Seal Kit	1	

© Whatever It Takes Transmission Parts. Inc.

44371A	O-Ring, L3N71B / L4N71B Filler Tube	1	6264902

PART #	TECHNICAL MANUALS	QTY.	REFERENCE #
53400	Technical Manual, L3N71B 3 Speed	1	83-SUBA3TM
53400B	Technical Manual, L4N71B 4 Speed (Nissan)	1	83-L4N71BTM
53400C	Technical Manual, N4A-EL 4 Speed (Mazda)	1	MAZDA-N4A-EL

PART #	ELECTRICAL COMPONENTS	QTY.	REFERENCE #
53410	Neutral Switch, 3N71B	1	31918-X0185
53410A	Neutral Switch, L4N71B (4 Cylinder)	1	319180X0189
53410B	Neutral Switch, L4N71B (200SX V-6 1987-88)	1	31918-X2892
53410BA	Neutral Switch, L4N71B (300ZX 1984-86 W/Out Turbo, & 300ZX 1987-89)	1	31918-X2889
53410BB	Neutral Switch, L4N71B (Pathfinder & Pickup 1987-89)	1	31918-X2890
53420	Solenoid Assembly, N4A-EL	1	
53425	Solenoid, L4N71B Lock-Up	1	
53425A	Solenoid, L4N71B Lock-Up 1984-86 (Pick-Up, 1987 Pathfinder, 2WD Pick-Ups, Vans, 200SX, 300ZX And All 1988-89	1	31941-P2012
53427A	Solenoid, L4N71B Overdrive Cancel 1984-87 Models	1	31945-X8601
53434	Solenoid, L4N71B Downshift 1979-86	1	31941-X0103
53434A	Solenoid, L4N71B Downshift 1987-89	1	31941-X0106
53436	Speed Sensor, L4N71B (Goes In Overdrive Case)	1	

PART #	HARD PARTS	QTY.	REFERENCE #
53510	Pump Body, L3N71B 3 Speed (Non Lock-Up)	1	
53510A	Pump Body, L3N71B 3 Speed (Lock-Up) (With 2 Small Holes Next To Bell) (No Valves) (With 3 Valve Channels On Face Of Body)	1	
53510B	Pump Body, L4N71B (With 1 Small Hole Next To Bell) (With No Lock-Up Valves)	1	
53510BA	Pump Body, L4N71B (With 1 Small Hole Next To Bell) (With 2 Lock-Up Valves)	1	
53510C	Pump Body, L4N71B (With 2 Small Hole Next To Bell) (With No Lock-Up Valves)	1	
53510D	Pump Body, E4N71B Electronic (Cast # 4N Next To Front Seal) 1988-Up	1	
53510DA	Pump Body, E4N71B Electronic (Cast # 4N-E Next To Front Seal) 1988-Up	1	
53520	Stator, L3N71B Non Lock-Up (1 Bushing) (4" Long Shaft)	1	
53520A	Stator, L3N71B Lock-Up (3 1/2" Long Shaft)	1	
53520AA	Stator, L3N71B Lock-Up (3 11/16" Long Shaft)	1	
53520B	Stator, L3N71B Lock-Up (With 2 Small Bleed Holes) 1987-Up	1	
53520C	Stator, L3N71B Non Lock-Up (2 Bushings) (4" Long Shaft)	1	
53520D	Stator, L3N71B Lock-Up (4 1/2" Long Shaft)	1	
53520E	Stator, L4N71B (With 1 Small Bleed Hole) (4 1/2" Long Shaft) (1.212"OD Pilot)	1	
53520G	Stator, L4N71B (With 1 Small Bleed Hole) (4 5/8" Long Shaft) (1.212"OD Pilot)	1	
53520H	Stator, L4N71B (With 1 Small Bleed Hole) (4 1/2" Long Shaft) (1.138"OD Pilot)	1	
53520J	Stator, L4N71B (With 2 Small Bleed Holes)(4 1/2" Long Shaft) (1.212"OD Pilot) (The Bottom Lock-Up Valve Oil Channel Has No Hole In Gasket Surface)	1	
53520JA	Stator, L4N71B (With 2 Small Bleed Holes) (4 5/8" Long Shaft) (1.212"OD Pilot)	1	
53520JB	Stator, L4N71B (With 2 Small Bleed Holes) (4 1/2" Long Shaft) (1.212"OD Pilot) The Bottom Lock-Up Valve Oil Channel Has A .235"OD Hole In The Gasket Surface)	1	
53520L	Stator, E4N71B Electronic (No Pilot On The Back)	1	
53550A	Drum, L4N71B Overdrive (Sprag Type) Washer Type	1	
53550B	Drum, L4N71B Overdrive (Sprag Type) BearingType	1	
53550C	Drum, L4N71B Overdrive (4 Clutch) (Without A Sprag Type)	1	
53550CA	Drum, L4N71B Overdrive (3 Clutch) (Without A Sprag Type)	1	
53554	Drum, L3N71B / L4N71B Forward (Uses 3 & 4 Clutch) (Has 3 Slots & 3 Round Holes Under # 231 Washer)	1	
53554A	Drum, L3N71B / L4N71B Forward (Uses 5 & 6 Clutch) (Has 3 Slots Under # 231 Washer)	1	
53555	Drum, L3N71B / L4N71B Direct (3 Clutch) (4.572"OD Piston)	1	
53555A	Drum, L3N71B / L4N71B Direct (4 Clutch) (4.572"OD Piston)	1	
53555B	Drum, L3N71B / L4N71B Direct (4 Clutch) (4.283"OD Piston)	1	
53555C	Drum, L4N71B Direct (2 Notches For Bearing Race) 1987-Up	1	
53560	Use 53565A	1	
53564	Use 53565A	1	
53565	Piston Kit, L3N71B / L4N71B Direct Clutch (4.283"OD Piston)	1	
53565A	Piston Kit, L3N71B / L4N71B Direct Clutch (4.572"OD Piston) (Also Fits Forward Clutch #564) (Also Fits Overdrive Clutch # 560)	1	
53567	Piston Kit, L3N71B / L4N71B Low / Reverse Clutch	1	

© Whatever It Takes Transmission Parts. Inc.

PART #	HARD PARTS (Continued)	QTY.	REFERENCE #
53570	Clutch Hub, L4N71B Overdrive (33 Teeth Sun Gear) (1.260” Pilot)	1	
53570A	Clutch Hub, L4N71B Overdrive (33 Teeth Sun Gear) (1.382” Pilot)	1	
53570B	Clutch Hub, L4N71B Overdrive (33 Teeth Sun Gear) (1.260” Pilot) Sprag Type	1	
53570C	Clutch Hub, L4N71B Overdrive (33 Teeth Sun Gear) (1.382” Pilot) Sprag Type	1	
53570D	Clutch Hub, L4N71B Overdrive (31 Teeth Sun Gear) (1.260” Pilot)	1	
53570E	Clutch Hub, L4N71B Overdrive (31 Teeth Sun Gear) (1.260” Pilot) Sprag Type	1	
53570G	Clutch Hub, L4N71B Overdrive (31 Teeth Sun Gear) (1.382” Pilot) Sprag Type	1	
53574	Clutch Hub, L3N71B / L4N71B Forward Clutch	1	
53577	Clutch Hub, L3N71B / L4N71B Low / Reverse (Drum Connecting) (33 Teeth)	1	
53580	Planet, L4N71B Overdrive (3 Gear) (33 Teeth Sun Gear)	1	
53580B	Planet, L4N71B Overdrive (3 Gear) (31 Teeth Sun Gear) (3/4” Spline Length)	1	
53580C	Planet, L4N71B Overdrive (3 Gear) (31 Teeth Sun Gear) (1 1/4” Spline Length)	1	
53580D	Planet, L4N71B Overdrive (4 Gear) (33 Teeth Sun Gear)	1	
53582A	Planet, L3N71B / L4N71B Forward (39 Teeth Sun Gear) 3 Gear (No Groove)	1	
53582AA	Planet, L3N71B / L4N71B Forward (39 Teeth Sun Gear) 3 Gear (1 Groove)	1	
53582B	Planet, L3N71B / L4N71B Forward (33 Teeth Sun Gear) 4 Gear	1	
53582C	Planet, L3N71B / L4N71B Forward (39 Teeth Sun Gear) 3 Gear (2 Groove)	1	
53582CA	Planet, L3N71B / L4N71B Forward (33 Teeth Sun Gear) 3 Gear (No Groove)	1	
53582D	Planet, L3N71B / L4N71B Forward (39 Teeth Sun Gear) 4 Gear (2 Groove)	1	
53582DA	Planet, L3N71B / L4N71B Forward (39 Teeth Sun Gear) 4 Gear (No Groove)	1	
53584A	Planet, L3N71B / L4N71B Rear (30 Teeth Sun Gear) No Groove (Cast Iron Housing)	1	
53584B	Planet, L3N71B / L4N71B Rear (30 Teeth Sun Gear) 2 Groove (Cast Iron Housing)	1	
53584BA	Planet, L3N71B / L4N71B Rear (30 Teeth Sun Gear) 3 Gear, 2 Groove (Aluminum Housing)	1	
53584BB	Planet, L3N71B / L4N71B Rear (30 Teeth Sun Gear) 3 Gear, No Groove (Aluminum Housing)	1	
53584BC	Planet, L3N71B / L4N71B Rear (30 Teeth Sun Gear) 3 Gear, 1 Groove (Aluminum Housing)	1	
53584C	Planet, L3N71B / L4N71B Rear (33 Teeth Sun Gear) No Groove (Cast Iron Housing)	1	
53584CA	Planet, L3N71B / L4N71B Rear (33 Teeth Sun Gear) No Groove (Aluminum Housing)	1	
53590	Ring Gear, L3N71B / L4N71B Overdrive, Forward, & Rear Planet (4 1/2”OD) 1.292” Thick (No Groove On Outside)	1	
53590A	Ring Gear, L3N71B / L4N71B Overdrive, Forward, & Rear Planet (4 1/2”OD) 1.292” Thick (1 Groove On Outside)	1	
53590B	Ring Gear, L3N71B / L4N71B Overdrive, Forward, & Rear Planet (4 13/16”OD) 1.377” Thick (Fits 3 Gear Planets)	1	
53590C	Ring Gear, L3N71B / L4N71B Overdrive, Forward, & Rear Planet (4 13/16”OD) 1.292” Thick	1	
53590D	Ring Gear, L3N71B / L4N71B Overdrive, Forward, & Rear Planet (4 1/2”OD) 1.377” Thick (Fits 3 Gear Forward Planets & Aluminum Rear Planet)	1	
53590E	Ring Gear, L3N71B / L4N71B (Fits 4 Gear Forward Planet & Steel Rear Planet)	1	
53604	Hub, L3N71B / L4N71B Support Rear Planet	1	
53610A	Sun Gear, L4N71B Overdrive (33 Teeth) (For 3 Gear Planet)	1	
53610B	Sun Gear, L4N71B Overdrive (33 Teeth) (For 4 Gear Planet)	1	
53610C	Sun Gear, L4N71B Overdrive (31 Teeth) (Bushing In Center Of Gear)	1	
53610CA	Sun Gear, L4N71B Overdrive (31 Teeth) (Bushing In 1 End Of Gear)	1	
53612	Sun Gear, L3N71B / L4N71B Forward (33/33 Teeth) No Groove (2 5/8” Long)	1	
53612A	Sun Gear, L3N71B / L4N71B Forward (39/30 Teeth) No Groove (2 5/8” Long)	1	
53612B	Sun Gear, L3N71B / L4N71B (39/30 Teeth) 1 Groove (2 5/8” Long)	1	
53620	Shell, L4N71B Overdrive (31 Teeth)	1	
53620A	Shell, L4N71B Overdrive (33 Teeth)	1	
53620B	Shell, E4N71B Overdrive (33 Teeth) For Electronic Pick-Up 1988-Up	1	
53622	Shell, L3N71B / L4N71B Driving (33 Teeth)	1	
53622A	Shell, L3N71B / L4N71B Driving (30 Teeth)	1	
53622B	Shell, E4N71B Driving (30 Teeth) Electronic	1	
53630	Center Support, L4N71B (With 1 Small Bushing) Washer Type	1	
53630A	Center Support, L4N71B (With 2 Small Bushings) Washer Type	1	
53630AA	Center Support, L4N71B (With 2 Small Bushings Only) Bearing Type	1	
53630B	Center Support, L4N71B (With 1 Large & 1 Small Bushing) Washer Type	1	
53630C	Center Support, L4N71B (With 1 Large & 1 Small Bushing) Bearing Type	1	

PART #	SPRAGS & ONE WAY CLUTCHES	QTY.	REFERENCE #
53650	Sprag, L4N71B Overdrive (In Overdrive Drum)	1	
53654	Sprag, L3N71B / L4N71B Low / Reverse	1	
53661	Outer Race, L4N71B Overdrive Sprag	1	
53664	Inner Race, L3N71B / L4N71B Low / Reverse Sprag	1	

© Whatever It Takes Transmission Parts. Inc.

PART #	HARD PARTS (Continued)	QTY.	REFERENCE #
53670	Input Shaft, L3N71B Non Lock-Up	1	
53670C	Input Shaft, L3N71B Lock-Up (9 1/8” Long)	1	
53670D	Input Shaft, L3N71B Lock-Up (10 3/16” Long)	1	
53670E	Input Shaft, L4N71B Overdrive Non Lock-Up (7 1/2” Long)	1	
53670G	Input Shaft, L4N71B Overdrive Lock-Up (8 1/2” Long) 18 Splines On Converter End	1	
53670H	Input Shaft, L4N71B Overdrive Lock-Up (8 1/2” Long) 20 Splines On Converter End	1	
53674A	Shaft, L4N71B Intermediate (7 1/2” Long)	1	
53674B	Shaft, L4N71B Intermediate (7 5/16” Long)	1	
53674C	Shaft, L4N71B Intermediate (6 5/8” Long) 1 Bushing Type	1	
53674CA	Shaft, L4N71B Intermediate (6 5/8” Long) 2 Bushing Type	1	
53678	Output Shaft, L3N71B / L4N71B (15 1/4” Long) With 6 Teeth Speed-O Gear 4 1/2” From End) 1.900”OD Splines	1	
53678A	Output Shaft, L3N71B / L4N71B (15 1/4” Long) With 6 Teeth Speed-O Gear 4 1/2” From End) .970”OD Splines	1	
53678B	Output Shaft, L3N71B / L4N71B (16 1/2” Long) Without Speed-O Gear(1.800”OD Splines)	1	
53678BA	Output Shaft, L3N71B / L4N71B (16 1/2” Long) Without Speed-O Gear (.950”OD Splines)	1	
53678C	Output Shaft, L3N71B / L4N71B (18 1/2” Long) Without Speed-O Gear (1.800”OD Splines)	1	
53678D	Output Sahft, L3N71B / L4N71B (19 7/8” Long) 8 Teeth Speed-O Gear (.930”OD Splines)	1	
53678E	Output Shaft, L3N71B / L4N71B (21 1/4” Long) Without Speed-O Gear (.945”OD Splines)	1	
53680	Governor, L3N71B	1	
53680A	Governor, L4N71B	1	
53685	Support, L3N71B / L4N71B Governor With Park Gear	1	
53740	Valve Body, L3N71B (Nissan)	1	
53740A	Valve Body, L3N71B (Ford)	1	
53740B	Valve Body, L4N71B (Without Sensor)	1	
53740C	Valve Body, L4N71B (With Sensor On End Plate)	1	
53740D	Valve Body, E4N71B (With 4 Solenoids)	1	

PART #	VALVE BODY COMPONENTS	QTY.	REFERENCE #
S53741RK	Boost Valve Kit, L4N71B With Sleeve (Sonnax)	1	66942-01K

PART #	HARD PARTS (Continued)	QTY.	REFERENCE #
53750	Bell Housing, L3N71B (Cast # L-L#2) With 2 Small O-Rings	1	
53750A	Bell Housing, L4N71B (Cast # Z-L #1) With 2 Small O-Rings	1	
53750B	Bell Housing, L4N71B (Cast # Z #1) With 2 Small O-Rings	1	
53750C	Bell Housing, L4N71B (Cast # VE #2) With 2 Small O-Rings	1	
53750D	Bell Housing, L4N71B (Cast # CAE #1) With 2 Small O-Rings	1	
53750E	Bell Housing, L4N71B With 1 Small O-Ring	1	
53750G	Bell Housing, L4N71B (With 4:00 Starter & Pivot Ball)	1	
53750H	Bell Housing, E4N71B (Electronic)	1	
53760	Case, L3N71B (Nissan)	1	
53760A	Case, L3N71B (Ford)	1	
53760B	Case, L4N71B Without Electrical Connector)	1	
53760C	Case, L4N71B With 1/2” Electrical Connector (With Screw In Modulator)	1	
53760CA	Case, L4N71B With 13/16” Electrical Connector (With Screw In Modulator)	1	
53760D	Case, L4N71B With 13/16” Electrical Connector (With Push In Modulator)	1	

PART #	CASE COMPONENTS	QTY.	REFERENCE #
53482	Capsule With Ball, L4N71B Overdrive Case To Servo	1	31679-X8600
53761-5	Check Balls, L4N71B Overdrive Case To Support	1	

PART #	HARD PARTS (Continued)	QTY.	REFERENCE #
53762	Overdrive Case, L4N71B (Uses Stator With 2 Small Bleed Holes) Uses A Washer # 214)	1	
53762A	Overdrive Case, L4N71B (Uses Stator With 1 Small Bleed Holes) Uses A Washer # 214)	1	
53762B	Overdrive Case, E4N71B (With Speed Sensor) Electronic Uses a Bearing # 214)	1	
53765	Pan, L4N71B 2WD	1	
53765A	Pan, E4N71B 2WD	1	
53770	Extension Housing, L4N71B (1.495”ID Bushing) 9 5/8” Long	1	
53770A	Extension Housing, L4N71B (1.375”ID Bushing) 9 5/8” Long	1	
53770B	Extension Housing, L4N71B (1.495”ID Bushing) 11” Long	1	
53770C	Extension Housing, L4N71B (1.430”ID Bushing) 11” Long	1	
53776K	Bolt Set, L4N71B Bell To Overdrive Case (Long Bolts)	1	
53778K	Bolt Set, L3N71B / L4N71B Pump Body To Stator	1	
53779K	Bolt Set, L3N71B / L4N71B Pan To Case	1	

© Whatever It Takes Transmission Parts. Inc.

PART #	HARD PARTS (Continued)	QTY.	REFERENCE #
53780K	Bolt Set, L3N71B / L4N71B Valve Body To Case	1	
53781K	Bolt Set, L3N71B / L4N71B Extension Housing To Case	1	
53782K	Bolt Set, L3N71B / L4N71B Valve Body To Case	1	
53790K	Bolt Set, L3N71B / L4N71B Rear Support To Case	1	
53845	Pick-Up Plate, E4N71B Speed Sensor (Electronic Units Only)	1	
53855	Cushion, L3N71B / L4N71B Forward / Direct (Dished)	1	31529-X0100
53860	Snap Ring, L4N71B Overdrive Drum (Below Sprag)	1	
53861	Snap Ring, L4N71B Overdrive Drum Top Pressure Plate	1	
53862	Snap Ring, L4N71B Holds Overdrive Clutch Retainer In	1	
53866	Snap Ring, L4N71B Holds Overdrive Sun Gear To Bowl	1	
53868	Snap Ring, L4N71B Holds Overdrive Ring Gear To Hub	1	
53876	Snap Ring, L3N71B / L4N71B Holds Top Pressure Plate In Forward Drum	1	
53877	Snap Ring, L3N71B / L4N71B Holds Forward Clutch Retainer In	1	
53878	Snap Ring, L3N71B / L4N71B Holds Pressure Plate In Direct Drum	1	
53879	Snap Ring, 3N71B / L4N71B Holds Direct Clutch Retainer In	1	
53880	Snap Ring, L4N71B Holds Input Shaft To Sensor Plate	1	
53881	Snap Ring, L3N71B / L4N71B Holds Hub To Front Ring Gear	1	
53884	Snap Ring, L3N71B / L4N71B Holds Sun Gear To Shell	1	
53885	Snap Ring, L3N71B / L4N71B Holds Low/Reverse Pressure Plate In Case	1	
53888	Snap Ring, L3N71B / L4N71B Holds Rear Planet To Connecting Drum	1	
53889	Snap Ring, L3N71B / L4N71B Holds Rear Ring Gear To Hub	1	
53890	Snap Ring, L3N71B / L4N71B Holds Sprag In Connecting Drum	2	
53894	Snap Ring, L3N71B / L4N71B Holds Output Shaft To Rear Planet Hub	1	
53900	Servo Assembly, L4N71B Overdrive	1	
53901	Spring, L4N71B Overdrive Servo	1	
53902	Piston, L4N71B Overdrive Servo	1	
53904	Cover, L4N71B Overdrive Servo	1	
53905	Servo Assembly, L3N71B / L4N71B Intermediate (Non Electronic)	1	
53905A	Servo Assembly, E4N71B Intermediate (Electronic)	1	
53906	Spring, L3N71B / L4N71B Intermediate Servo	1	
53907	Piston, L3N71B / L4N71B Intermediate Servo	1	
53909	Cover, L3N71B / L4N71B Intermediate Servo	1	
53916	Strut, L3N71B / L4N71B Intermediate Band (For Hard Band)	1	
53916A	Strut, L3N71B / L4N71B Intermediate Band (For Flex Band)	1	
53925	Accumulator Assembly, L4N71B Overdrive	1	
53926	Spring, L4N71B Overdrive Accumulator	1	
53927	Piston, L4N71B Overdrive Accumulator	1	
53929	Cover, L4N71B Overdrive Accumulator	1	
53960	Use 53565A	1	
53964	Use 53965A	1	
53965	Piston, L3N71B / L4N71B Direct Clutch (4.283”OD)	1	
53965A	Piston, L3N71B / L4N71B Direct Clutch (4.572”OD) (Also Fits Forward Clutch #964)(Also Fits Overdrive Clutch #960)	1	
53967	Piston, L3N71B / L4N71B Low/Reverse Clutch	1	
53970	Springs, L4N71B Overdrive Clutch Return	9	
53974	Springs, L3N71B Forward Clutch Return	9	
53975	Springs, L3N71B / L4N71B Direct Clutch Return	9	
53977	Diaphragm Spring, L3N71B / L4N71B Low / Reverse Clutch Return	1	
53980	Retainer, L4N71B Overdrive Clutch Spring	1	
53984	Retainer, L3N71B / L4N71B Forward Clutch Spring	1	
53985	Retainer, L3N71B / L4N71B Direct Clutch	1	
53987	Retaining Ring, L3N71B / L4N71B Low/Reverse Clutch Return Spring	1	
53991	Linkage Assembly, L4N71B With Park Rod (Internal)	1	
53995	Park Pawl Assembly, L4N71B	1	
53996	Fitting, L3N71B / L4N71B Cooler Line	2	

© Whatever It Takes Transmission Parts. Inc.

Technical Bulletin #393

Transmission: *3N71B, 4N71B, M41*
Subject: *Orifice locations*
Application: *Nissan, Mazda, Dodge, Mitsubishi, Subaru*
Issue Date: *1996*

3N71B, 4N71B, M41

Orifice Locations

The following illustration shows the location and size of the various orifices used in these transmissions.

NOTE: Not all units use all of the orifices shown.

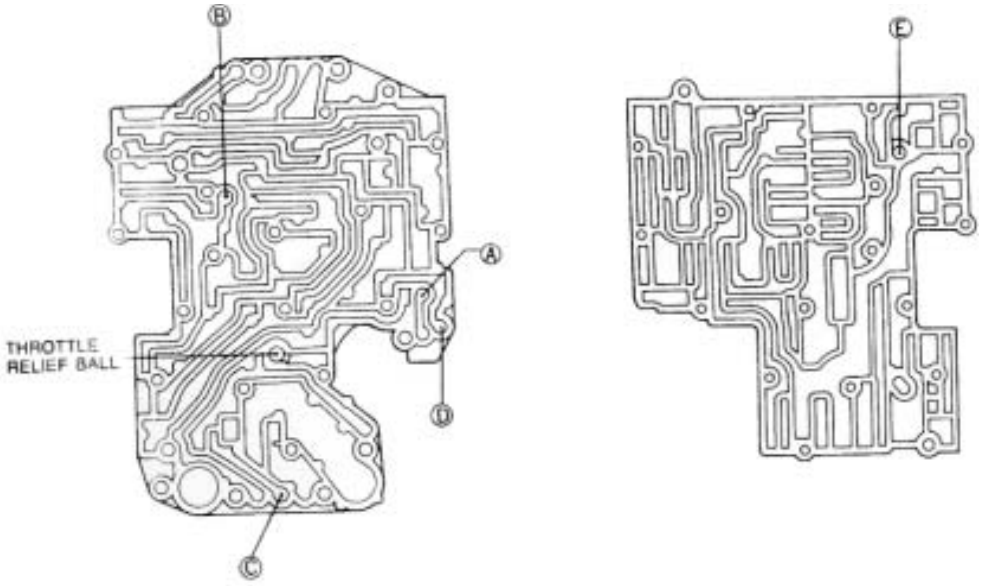

Orifice	Function	Observed Sizes
A	Meters intermediate servo release oil during a 3-2 downshift	.047", .051", .059", .067"
B	Meters oil to the direct clutch for 3rd gear	.059"
C	Meters forward clutch oil for engagement feel into drive	.070", .079"
D	Meters line oil to the overdrive direct clutch and release side of the OD server during a 4-3 downshift	.079", .087"
E	Meters the direct clutch for reverse engagement (does not use a spring)	.079", .087

Copyright © 2003 ATRA. All Rights Reserved.

NISSAN

© Whatever It Takes Transmission Parts. Inc.

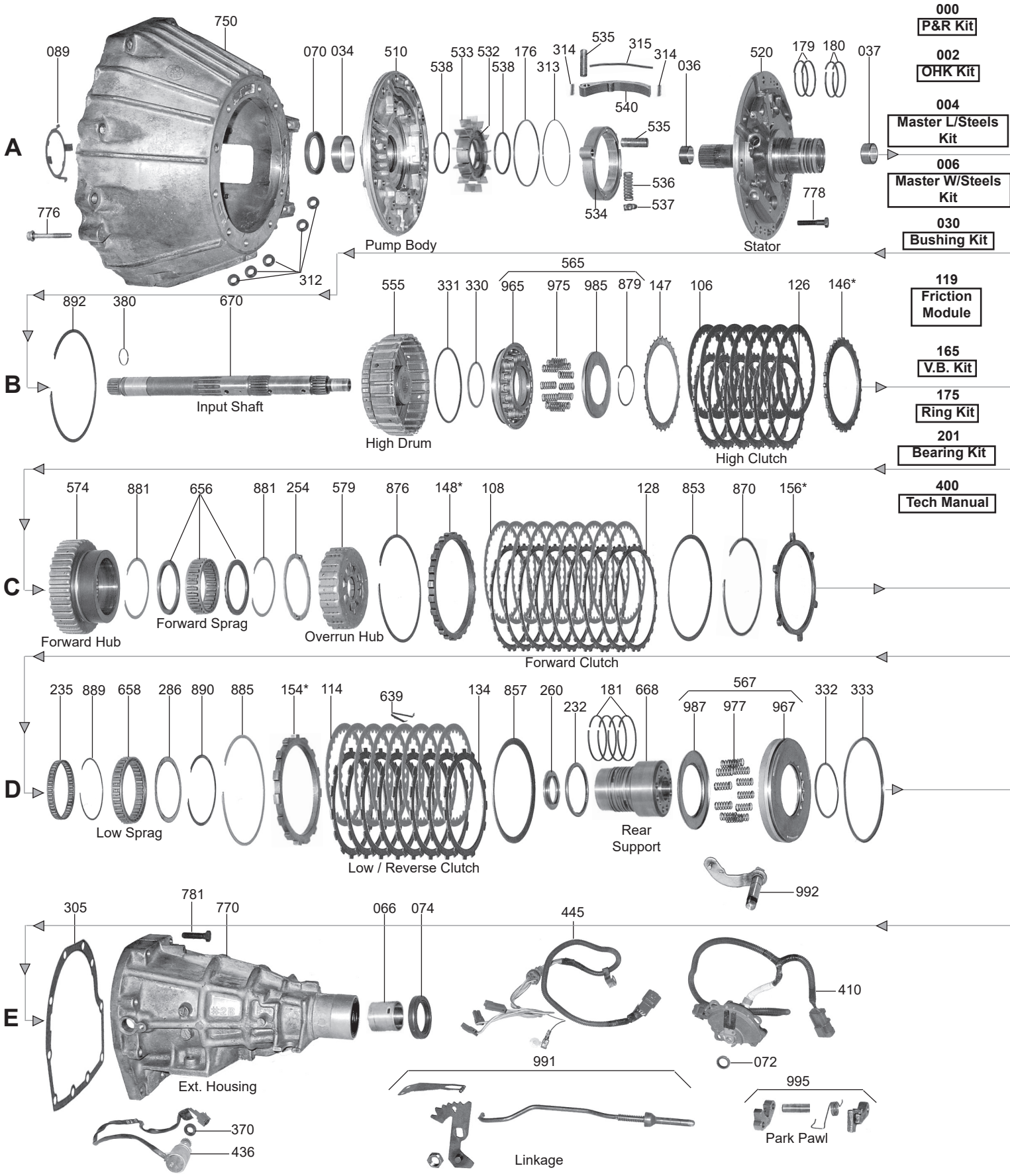

© Whatever It Takes Transmission Parts. Inc.

RL4R01A / RE4R01A / RE4R03A

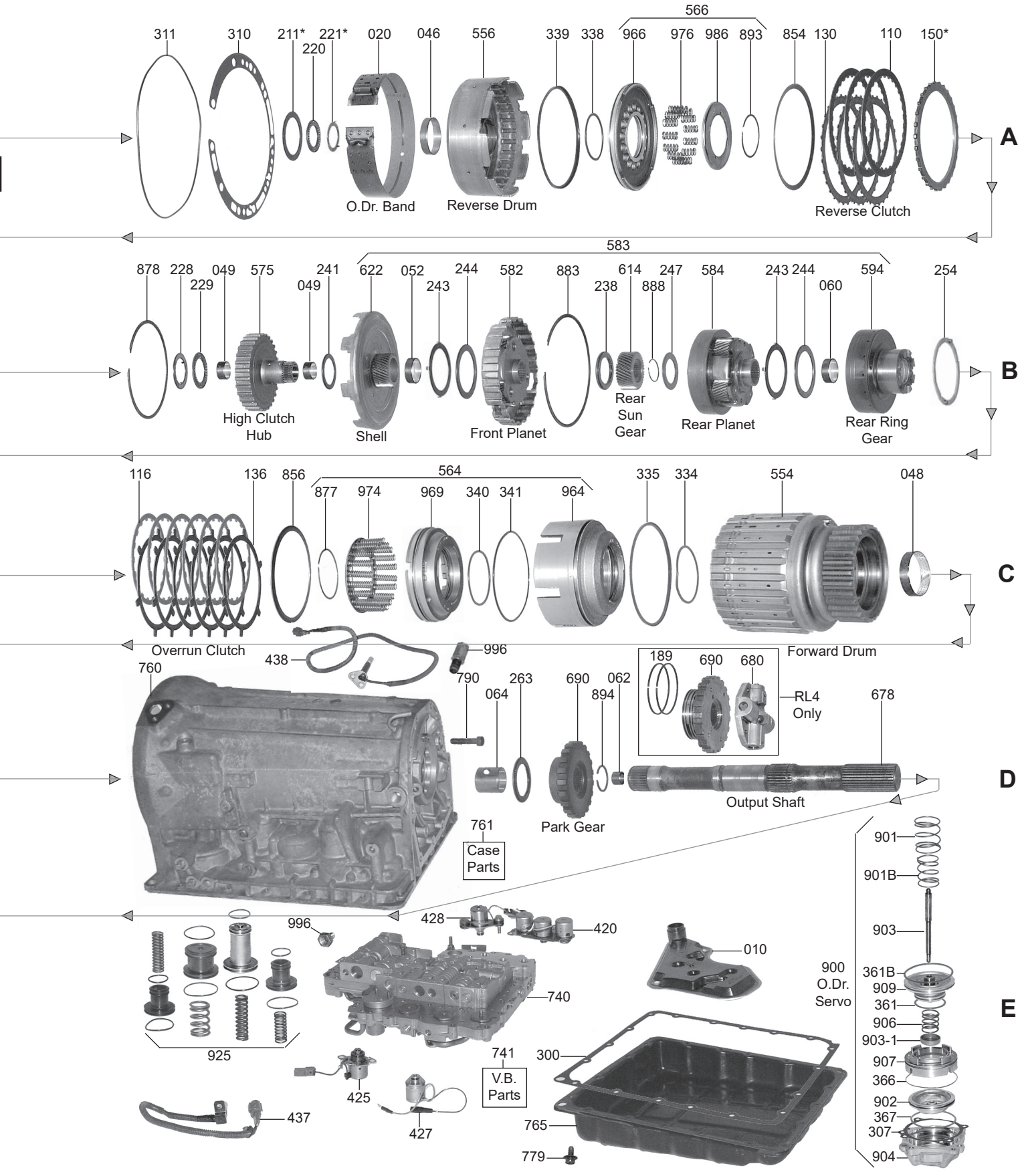

1-800-940-0197

© Whatever It Takes Transmission Parts. Inc.

RG4R01A / JR403E

RWD 4 Speed

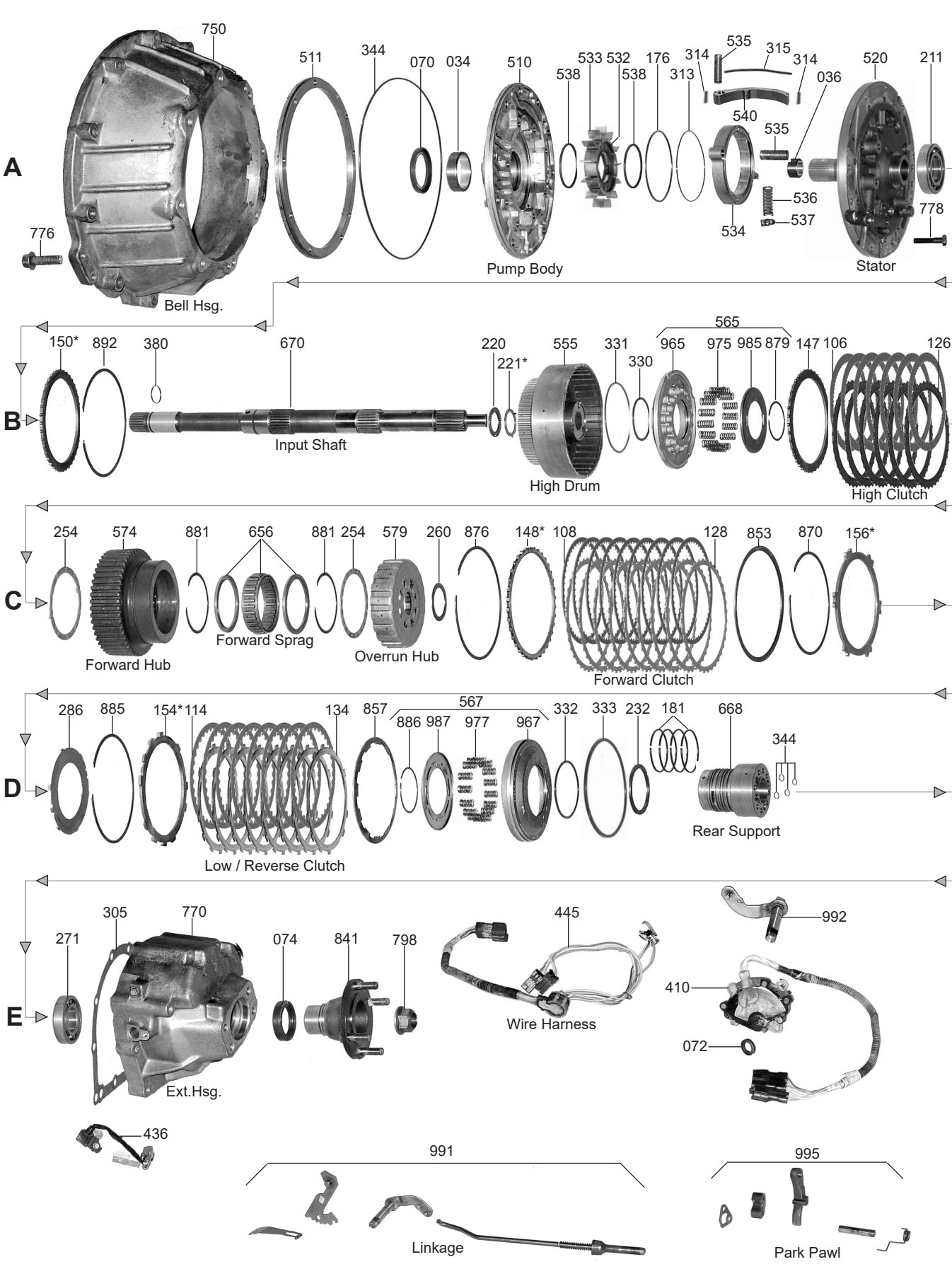

000 P&R Kit

002 OHK Kit

004 Master L/Steels Kit

006 Master W/Steels Kit

030 Bushing Kit

119 Friction Module

165 V.B. Kit

175 Ring Kit

201 Bearing Kit

400 Tech Manual

NISSAN

© Whatever It Takes Transmission Parts. Inc.

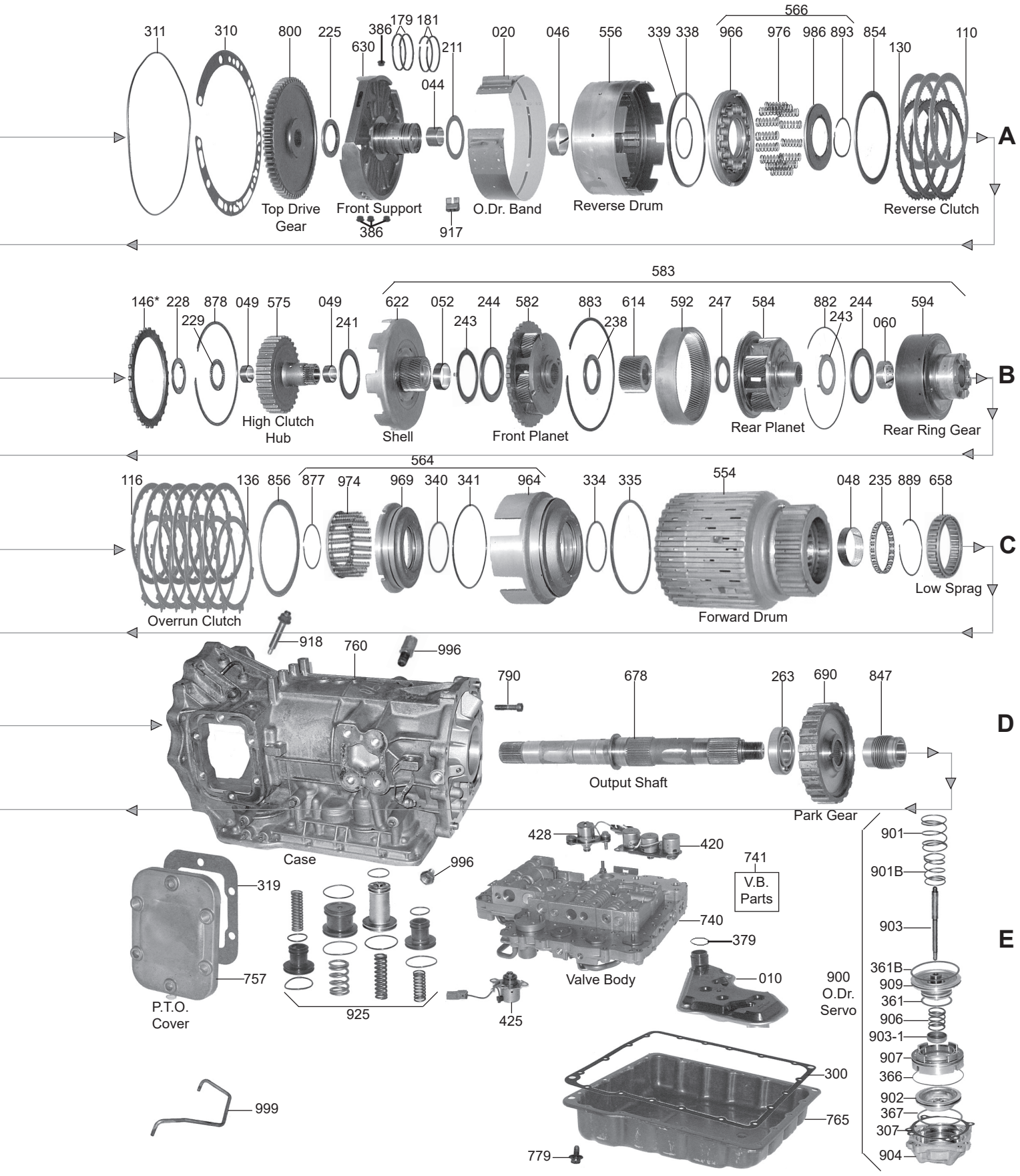

© Whatever It Takes Transmission Parts. Inc.

PART #	PAPER & RUBBER KIT	QTY.	REFERENCE #
73000A	Paper & Rubber Kit, RL4R01A/RE4R01A (R4A-EL) (Nissan & Mazda)	1	
73000G	Paper & Rubber Kit, RG4R01A (JR403E)	1	
73000Q	Paper & Rubber Kit, RE4R03A	1	
73001C	Sub Kit, R4A-EL (Mazda)	1	

PART #	OVERHAUL KITS	QTY.	REFERENCE #
73002A	Overhaul Kit, RL4R01A/RE4R01A (Nissan) 1987-Up	1	
73002C	Overhaul Kit, R4A-EL (RL4R01A/RE4R01A) (Mazda) 1989-92	1	
73002G	Overhaul Kit, RG4R01A (JR403E)	1	
73002Q	Overhaul Kit, RE4R03A	1	
73002R	Overhaul Kit, RE5R01A	1	

PART #	MASTER L/STEEL KIT	QTY.	REFERENCE #
73004A	Master L/Steels Kit, RL4R01A/RE4R01A (Nissan & Infinity)(With .079" Forward Friction) 1987-97 (For 1998-Up Sell Six 23114A Also)	1	
73004B	Master L/Steels Kit, RL4R01A/RE4R01A (Nissan & Infinity)(With .063" Forward Friction) 1987-Up (With .076" Low/Reverse Friction)(If Customer Has .061" Sell 23114A Also)	1	
73004BB	Master L/Steels, RE4R01A 2000-04 (Pathfinder, QX4, Frontier & Xterra 3.5L)	1	
73004C	Master L/Steels Kit, R4A-EL (RL4R01A/RE4R01A) Mazda 1989-Up	1	
73004G	Master L/Steels Kit, RG4R01A/JR403E 1988-Up (Mazda Titan, Nissan Meduim Size Truck, Isuzu Diesel NPR And W4, Mitsubishi 2 Ton Truck And Bus)	1	
73004QC	Master L/Steels Kit, RE4R03A (300ZX With Twin Turbo) 1990-Up	1	
73004QD	Master L/Steels Kit, RE4R03A (Infinity Q45) 1990-Up	1	

PART #	MASTER W/STEEL KIT	QTY.	REFERENCE #
73006A	Master W/Steels Kit, RL4R01A/RE4R01A (Nissan) 1987-8/1989 (Nissan 2WD Pickup, 2WD Pathfinder, 240SX, 2WD Van, Infinity M30)	1	
73006AA	Master W/Steels Kit, RL4R01A/RE4R01A (Nissan) 9/1989-1992 (Nissan 2WD Pickup, 2WD Pathfinder, 240SX, 2WD Van, Infinity M30)	1	
73006AB	Master W/Steels Kit, RE4R01A (Nissan) 1993-Up (Nissan 2WD Pickup, 2WD Pathfinder, 240SX, 2WD Van And Infinity M30)	1	
73006B	Master W/Steels Kit, RL4R01A/RE4R01A (Nissan) 1987-8/1989 (Nissan 4x4 Pickup, 4x4 Pathfinder, 300ZX Non Turbo, 4x4 Van, Infinity J30)	1	
73006BA	Master W/Steels Kit, RL4R01A/RE4R01A (Nissan) 8/1989-1992 (Nissan 4x4 Pickup, 4x4 Pathfinder, 300ZX Non Turbo, 4x4 Van, Infinity J30)	1	
73006BB	Master W/Steels Kit, RE4R01A (Nissan) 1993-Up (4x4 Pickup, 4x4 Pathfinder, 300ZX Non Turbo, 4x4 Van, Exterra 2000-Up, Frontier 1998-Up, Infinity J30 & QX4)	1	
73006C	Master W/Steels Kit, R4A-EL (RL4R01A/RE4R01A) Mazda 1989-12/1992 (Mazda MPV, Pickup, B2600, 929, RX7)	1	
73006CB	Master W/Steels Kit, R4A-EL (RE4R01A) Mazda 1993-Up (Mazda MPV, Pickup, B2600, 929, RX7)	1	
73006G	Master W/Steels Kit, RG4R01A/JR403A 1988-Up (Mazda Titan, Nissan Medium Size Truck, Isuzu Diesel NPR & W4, Mitsubishi 2 Ton Truck & Bus)	1	
73006QC	Master W/Steels Kit, RE4R03A (300ZX With Twin Turbo) 1990-Up	1	
73006QD	Master W/Steels Kit, RE4R03A (Infinity Q45) 1990-Up	1	

PART #	FILTER	QTY.	REFERENCE #
73010A	Filter, RL4R01A/RE4R01A (3/16" Tall Pick-up) (Mazda MPV Van & 2WD Pathfinder/Pickup With 6 Cylinder 1987-92) Customers 3/16" Tall Pick-up May Be Square, Ours Are Round (Same Filter)	1	31728-41X00
73010AB	Filter, RL4R01A/RE4R01A (Nissan 240SX) 1989-Up (Bottom Is Flat With 5/32" Tall Square Pick-Up Tube)	1	
73010B	Filter, RE4R01A/RG4R01A/JR403E (Nissan Non Turbo, Mazda R4A-EL, Infinity J30) (Also Nissan, Isuzu, Mazda, Mitsubishi Large Truck) (Bottom Is Flat With 15/16" Tall Square Pick-Up)(3/4" Tall Round Pick-Up) Customers 3/4" Pick-Up May Be Square, Ours Is Round, This Is How Sealed Power Makes Theirs Now (Same Filer)	1	
7010C	Filte, R4A-EL (Mazda RX7) 194-Up		
73010D	Filter, R4AEL (Mazda 29) 1990-U	1	
73010Q	Filter, RE4R03A (Nissan 300ZX With Turbo, Infinity Q45)	1	
73010R	Filter, RE5R01A (JR502E) 1991-Up	1	

© Whatever It Takes Transmission Parts. Inc.


73010A


73010AB


73010AC


73010AD


73010B


73010C


73010D


73010Q

PART #	BANDS	QTY.	REFERENCE #
73020	Band, RL4R01A/RE4R01A Overdrive (1 1/2" Wide) 1987-98 (Uses A Split Strut On 1 End) (1 Groove In Lining)	1	
B73020	Band, RL/RE4R01A Overdrive (1 9/16" Wide)1987-98(Uses A Split Strut On 1 End)(3 Groove In Lining)	1	
73020A	Band, RE4R01A Overdrive (2 3/8" Wide) 1998-Up (Has A Groove In Lining Half The Way Around The Band & Has 3 Grooves In Lining The Other Halp Way Around The Band)(Uses Round Struts On Both Ends)	1	
73020BB	Band, RE4R01A Overdrive (1 1/2" Wide) 1999-Up (Has 1 Groove In Lining 1/2 Of The Way Around The Band And Has 3 Grooves In The Lining The Other 1/2 Of The Way Around The Band)(Uses Round Struts On Both Ends)	1	
73020G	Band, RE4R03A/RG4R01A/JR403E Overdrive (2 3/8" Wide) 1989-Up	1	31630-51X02

PART #	BUSHINGS	QTY.	REFERENCE #
73030	Bushing Kit, RL4R01A/RE4R01A 1987-Up	1	
73030G	Bushing Kit, RG4R01A/RE4R03A/JR403E 19887-Up	1	
93034	Bushing Kit, RL4R01A/RE4R01A/RG4R01A/RE4R03A Pump Body	1	
73036	Bushing, RL4R01A/RE4R01A Stator (Front) (.845"ID)	1	
73036A	Bushing, RL4R01A/RE4R01A Stator (Front) (.945"ID)	1	
73036G	Bushing, RE4R03A/RG4R01A/JR403E Stator (Front) (1.048"ID) (1.146"OD)	1	
93037	Bushing, RL4R01A/RE4R01A Stator (Rear)	1	
73037Q	Bushing, RE4R03A Stator (Rear) (1.100"ID) (Also Fits RG4R01A/RE4R03A Front Sun Gear Shell)	1	
93046	Bushing, RL4R01A/RE4R01A Reverse Drum	1	
73046G	Bushing, RE4R03A/RG4R01A/JR403E Reverse Drum (2.016"ID) (2.133"OD)	1	
73048	Bushing, RL4R01A/RE4R01A/RG4R01A/JR403E Forward Drum	1	
93049	Bushing, RL4R01A/RE4R01A High Hub	2	
73049G	Bushing, RG4R01A/RE4R03A/JR403E High Hub	2	
93052	Bushing, RL4R01A/RE4R01A Front Sun Gear (Shell)	1	
73052G	Bushing, RG4R01A/RE4R03A Front Sun Gear (Shell)	1	
73060	Bushing, RL4R01A/RE4R01A Rear Ring Gear	1	
73060G	Bushing, RG4R01A/RE4R03A/JR403E Rear Ring Gear	1	
73062	Bushing, RE4R01A Front Output Shaft Bushing	1	
73064	Bushing, RL4R01A/RE4R01A/RE5R01A Case	2	
73064B	Bushing, RL4R01A/RE4R01A Case (Bronze) 1 Piece (Replaces 2 Case Bushings)	1	
73064G	Bushing, RG4R01A/RE4R03A/JR403E Case	2	
73066	Bushing, RL4R01A/RE4R01A Extension Housing	1	
73066G	Bushing, RG4R01A/RE4R03A/JR403E Extension Housing	1	

PART #	METAL CLAD SEALS	QTY.	REFERENCE #
93070	Seal, RL4R01A/RE4R01A/RE4R03A/RG4R01A/JR403E Pump (Converter Housing)(No Notch)	1	31344-21X00
93070A	Seal, RL4R01A/RE4R01A/RE4R03A/RG4R01A/JR403E Pump (Converter Housing)(With Notch)	1	
73072	Seal, RL4R01A/RE4R01A/RE4R03A Manual Lever	1	31375-41X00
73074	Seal, RE4R03A Extension Housing (300ZX Turbo 1990-91) (Infinity Q45 1990-93)	1	32136-01G10
73074A	Seal, RE4R01A Extension Housing (Infinity J30) 1993-Up	1	31375-41X07
73074B	Seal, RE4R01A Extension Housing (Mazda 929 1992-Up) (MPV 2WD 1994-Up)	1	R501-17-335A

© Whatever It Takes Transmission Parts. Inc.

PART #	METAL CLAD SEALS (Continued)	QTY.	REFERENCE #
53074B	Seal, RL4R01A/RE4R03A Extension Housing (240SX & Van 1987-89) (300ZX Without Turbo 1994-95) (Truck 2WD 1995-Up) (Infinity M30 1990-93)	1	31336-X8000
73074C	Seal, R4A-EL 4x4 Adapter Housing (Mazda)	1	
73074D	Seal, RL4R01A/RE4R01A Extension Housing (All Nissan Truck 1987-89) (Nissan 4x4 1190-Up)	1	31336-X6901
73074G	Seal, JR403E Extension Housing (Isuzu Truck 1988-Up)	1	
73074Q	Seal, RE4R03A Extension Housing (Infinity M30 & Q45 1994-Up)	1	31375-51X01
73089	Seal Retainer, RL4R01A/RE4R01A Front Seal Lock	1	

PART #	FRICTION CLUTCH	QTY.	REFERENCE #
93106B	Friction, RL4R01A/RE4R01A High Clutch (.063") 30 Teeth 1987-Up	4-5	
73106G	Friction, RG4R01A/RE4R03A/JR403E High Clutch (.062") 64 Teeth 1987-Up	6-7	
73108	Friction, RL4R01A/RE4R01A Forward Clutch (.079") 36 Teeth 1987-Up	5-7	
73108A	Friction, RL4R01A/RE4R01A ForwardClutch (.063") 36 Teeth 1987-Up	5-7	
73108G	Friction, RG4R01A/RE4R03A/JR403E Forward Clutch (.079") 50 Teeth 1987-Up	7-9	
93110A	Friction, RL4R01A/RE4R01A Reverse Clutch (.079") 34 Teeth 1987-92	2	
73110AA	Friction, RL4R01A/RE4R01A Reverse Clutch (.079") 30 Teeth 1993-Up (Flat Square Teeth)	2	
73110G	Friction, RG4R01A/RE4R03A/JR403E Reverse Clutch (.075") 64 Teeth 1987-Up	3	
73114	Friction, RL4R01A/RE4R01A Low/Reverse Clutch (.076")(30 Teeth)(Dull Pointed Teeth) 1987-Up	4-7	
23114A	Friction, RE4R01A Low/Reverse Clutch (.061")	4-7	
73114G	Friction, RG4R01A/RE4R03A/JR403E Low/Reverse Clutch (.064") 33 Teeth 1987-Up	7-8	
73116	Friction, RL4R01A/RE4R01A Overrun Clutch (.079") 18 Teeth 1987-Up	3	
73116G	Friction, RG4R01A/RE4R03A/JR403E Overrun Clutch (.079") 20 Teeth 1987-Up	5	
73116GA	Friction, RG4R01A/JR403E Overrun Clutch (.060") 64 Teeth 1995-Up	4-6	
73116Q	Friction, RE4R03A (Nissan 300ZX With Turbo) Overrun Clutch (.062") 20 Teeth 1987-Up	4	
73119A	Friction Module, RL4R01A/RE4R01A (Fits 73004A & 73004C)	1	
73119B	Friction Module, RL4R01A/RE4R01A (Fits 73004B)	1	
73119QD	Friction Module, RE4R03A/RG4R01A/JR403E (Fits 73004G & 73004QD)	1	

PART #	STEEL CLUTCH	QTY.	REFERENCE #
73126	Steel, RL4R01A/RE4R01A High Clutch (.067") 27 Teeth 1987-E89	4-7	
93126B	Steel, RL4R01A/RE4R01A High Clutch (.118") 27 Teeth 1987-Up	3	
93126BA	Steel, RL4R01A/RE4R01A High Clutch (.079") 27 Teeth L1989-Up	3-5	31536-41X03
73126G	Steel, RG4R01A/JR403E High Clutch (.118") 40 Teeth	6	
73126Q	Steel, RE4R03A High Clutch (.079") 40 Teeth (Also Fits RE4RO3A/RG4RO1A/JR403E Reverse Clutch)	6-10	
73128	Steel, RL4R01A/RE4R01A Forward Clutch (.071") 24 Teeth 1/1995-Up	5-7	31536-AA010
73128A	Steel, RL4R01A/RE4R01A Forward Clutch (.079") 24 Teeth 1987-1/1995	5-7	31536-41X12
73128G	Steel, RE4R03A/RG4R01A/JR403E Forward Clutch (.079") 36 Teeth (5.360"ID)	7-14	
93130A	Steel, RL4R01A/RE4R01A Reverse Clutch (.079") 30 Teeth 1987-92	2	
73130B	Steel, RL4R01A/RE4R01A Reverse Clutch (.079") 30 Teeth (5.090"ID) 1993-Up	2	
73130BA	Steel, RE4R01A Reverse Clutch (.110")(30 Teeth)(5.090"ID) 2002-Up	2	
73130G	Steel, RE4R03A/RG4R01A/JR403E Reverse Clutch (.079") 40 Teeth (Use 73126Q)	3	
73134	Steel, RL4R01A/RE4R01A Low/Reverse Clutch (.079") 14 Teeth 1989-Up	4-7	31666-AA050
73134A	Steel, RL4R01A/RE4R01A Low/Reverse Clutch (.051") 14 Teeth 1989-Up	AR	
73134G	Steel, RE4R03A/RG4R01A/JR403E Low/Reverse Clutch (.079") 11 Teeth	6-9	
73136	Steel, RL4R01A/RE4R01A Overrun Clutch (.079") 6 Teeth (4.700"ID)	3-5	
73136G	Steel, RE4R03A/RG4R01A/JR403E Overrun Clutch (.079") 6 Teeth (5.360"ID)	5-7	31532-51X02
73136GA	Steel, RG4R01A/JR403E Overrun Clutch (.118") 40 Teeth (5.200"ID) 1995-Up	4-6	

PART #	CLUTCH PRESSURE PLATES	QTY.	REFERENCE #
73146A	Pressure Plate, RL4R01A/RE4R01A High Clutch (3.6mm) (27 Teeth)	1	
73146AA	Pressure Plate, RL4R01A/RE4R01A High Clutch (3.8mm) (27 Teeth)	1	
73146AB	Pressure Plate, RL4R01A/RE4R01A High Clutch (4.0mm) (27 Teeth)	1	
73146AC	Pressure Plate, RL4R01A/RE4R01A High Clutch (4.2mm) (27 Teeth)	1	
73146AD	Pressure Plate, RL4R01A/RE4R01A High Clutch (4.4mm) (27 Teeth)	1	
73146AE	Pressure Plate, RL4R01A/RE4R01A High Clutch (4.6mm) (27 Teeth)	1	
73146AG	Pressure Plate, RL4R01A/RE4R01A High Clutch (4.8mm) (27 Teeth)	1	
73146AH	Pressure Plate, RL4R01A/RE4R01A High Clutch (5.0mm) (27 Teeth)	1	
73146G	Pressure Plate, RE4R03A/RG4R01A/JR403E High Clutch (4.4mm) (40 Teeth) (Also Fits Pressure Plate, RE4R03A/RG4R01A/JR403E Reverse Clutch)	1	
73146GA	Pressure Plate, RE4R03A/RG4R01A/JR403E High Clutch (4.6mm) (40 Teeth) (Also Fits Pressure Plate, RE4R03A/RG4R01A/JR403E Reverse Clutch)	1	

© Whatever It Takes Transmission Parts. Inc.

73146GB	Pressure Plate, RE4R03A/RG4R01A/JR403E High Clutch (4.8mm) (40 Teeth) (Also Fits Pressure Plate, RE4R03A/RG4R01A/JR403E Reverse Clutch)	1
73147	Pressure Plate, RL4R01A/RE4R01A High Clutch (Bottom)	1
73148A	Pressure Plate, RL4R01A/RE4R01A Forward Clutch (8.0mm) (24 Teeth)	1
73148AA	Pressure Plate, RL4R01A/RE4R01A Forward Clutch (8.2mm) (24 Teeth)	1
73148AB	Pressure Plate, RL4R01A/RE4R01A Forward Clutch (8.4mm) (24 Teeth)	1
73148AC	Pressure Plate, RL4R01A/RE4R01A Forward Clutch (8.6mm) (24 Teeth)	1
73148AD	Pressure Plate, RL4R01A/RE4R01A Forward Clutch (8.8mm) (24 Teeth)	1
73148AE	Pressure Plate, RL4R01A/RE4R01A Forward Clutch (9.0mm) (24 Teeth)	1
73148AG	Pressure Plate, RL4R01A/RE4R01A Forward Clutch (9.2mm) (24 Teeth)	1
73148AH	Pressure Plate, RL4R01A/RE4R01A Forward Clutch (4.3mm) (24 Teeth)	1
73148G	Pressure Plate, RE4R03A/RG4R01A/JR403E Forward Clutch (4.2mm) (36 Teeth)	1
73148GA	Pressure Plate, RE4R03A/RG4R01A/JR403E Forward Clutch (4.4mm) (36 Teeth)	1
73148GB	Pressure Plate, RE4R03A/RG4R01A/JR403E Forward Clutch (4.6mm) (36 Teeth)	1
73148GC	Pressure Plate, RE4R03A/RG4R01A/JR403E Forward Clutch (4.8mm) (36 Teeth)	1
73148GD	Pressure Plate, RE4R03A/RG4R01A/JR403E Forward Clutch (5.1mm) (36 Teeth)	1
73148GE	Pressure Plate, RE4R03A/RG4R01A/JR403E Forward Clutch (5.3mm) (36 Teeth)	1
93150	Pressure Plate, RL4R01A/RE4R01A Reverse Clutch (4.6mm) (30 Teeth) (5.345”ID) 1987-92	1
73150A	Pressure Plate, RL4R01A/RE4R01A Reverse Clutch (4.6mm) (30 Teeth) (5.080”ID)	1
93150A	Pressure Plate, RL4R01A/RE4R01A Reverse Clutch (4.8mm) (30 Teeth) (5.345”ID) 1987-92	1
73150AA	Pressure Plate, RL4R01A/RE4R01A Reverse Clutch (4.8mm) (30 Teeth) (5.080”ID)	1
73150AAA	Pressure Plate, RL4R01A/RE4R01A Reverse Clutch (4.9mm) (30 Teeth) (5.080”ID)	1
73150AB	Pressure Plate, RL4R01A/RE4R01A Reverse Clutch (5.0mm) (30 Teeth) (5.080”ID)	1
73150ABA	Pressure Plate, RL4R01A/RE4R01A Reverse Clutch (5.1mm) (30 Teeth) (5.080”ID)	1
73150AC	Pressure Plate, RL4R01A/RE4R01A Reverse Clutch (5.2mm) (30 Teeth) (5.080”ID)	1
73150AD	Pressure Plate, RL4R01A/RE4R01A Reverse Clutch (5.4mm) (30 Teeth) (5.080”ID)	1
73150AE	Pressure Plate, RL4R01A/RE4R01A Reverse Clutch (5.6mm) (30 Teeth) (5.080”ID)	1
73150AG	Pressure Plate, RL4R01A/RE4R01A Reverse Clutch (5.8mm) (30 Teeth) (5.080”ID)	1
93150B	Pressure Plate, RL4R01A/RE4R01A Reverse Clutch (5.0mm) (30 Teeth) (5.345”ID) 1987-92	1
93150C	Pressure Plate, RL4R01A/RE4R01A Reverse Clutch (5.2mm) (30 Teeth) (5.345”ID) 1987-92	1
93150D	Pressure Plate, RL4R01A/RE4R01A Reverse Clutch (5.4mm) (30 Teeth) (5.345”ID) 1987-92	1
73150G	Pressure Plate, RE4R03A/RG4R01A/JR403E Reverse Clutch (40 Teeth) (Use 73146G)	1
73154A	Pressure Plate, RL4R01A/RE4R01A Low/Reverse Clutch (8.6mm) (14 Teeth)	1
73154AA	Pressure Plate, RL4R01A/RE4R01A Low/Reverse Clutch (8.8mm) (14 Teeth)	1
73154AB	Pressure Plate, RL4R01A/RE4R01A Low/Reverse Clutch (9.0mm) (14 Teeth)	1
73154AC	Pressure Plate, RL4R01A/RE4R01A Low/Reverse Clutch (9.2mm) (14 Teeth)	1
73154AD	Pressure Plate, RL4R01A/RE4R01A Low/Reverse Clutch (9.4mm) (14 Teeth)	1
73154AE	Pressure Plate, RL4R01A/RE4R01A Low/Reverse Clutch (9.6mm) (14 Teeth)	1
73154AG	Pressure Plate, RL4R01A/RE4R01A Low/Reverse Clutch (7.3mm) (14 Teeth)	1
73154G	Pressure Plate, RE4R03A/RG4R01A/JR403E Low/Reverse Clutch (4.6mm) (11 Teeth)	2
73154GA	Pressure Plate, RE4R03A/RG4R01A/JR403E Low/Reverse Clutch (4.8mm) (11 Teeth)	2
73154GB	Pressure Plate, RE4R03A/RG4R01A/JR403E Low/Reverse Clutch (5.0mm) (11 Teeth)	2
73156A	Pressure Plate, RL4R01A/RE4R01A Overrun Clutch (4.0mm) (6 Teeth)	1
73156AA	Pressure Plate, RL4R01A/RE4R01A Overrun Clutch (4.2mm) (6 Teeth)	1
73156AB	Pressure Plate, RL4R01A/RE4R01A Overrun Clutch (4.4mm) (6 Teeth)	1
73156AC	Pressure Plate, RL4R01A/RE4R01A Overrun Clutch (4.6mm) (6 Teeth)	1
73156AD	Pressure Plate, RL4R01A/RE4R01A Overrun Clutch (4.8mm) (6 Teeth)	1
73156AE	Pressure Plate, RL4R01A/RE4R01A Overrun Clutch (5.0mm) (6 Teeth)	1
73156AG	Pressure Plate, RL4R01A/RE4R01A Overrun Clutch (5.2mm) (6 Teeth)	1
73156G	Pressure Plate, RE4R03A/RG4R01A/JR403E Overrun Clutch (4.0mm) (6 Teeth)	1
73156GA	Pressure Plate, RE4R03A/RG4R01A/JR403E Overrun Clutch (4.2mm) (6 Teeth)	1
73156GB	Pressure Plate, RE4R03A/RG4R01A/JR403E Overrun Clutch (4.4mm) (6 Teeth)	1
73156GE	Pressure Plate, RG4R01A/JR403E Overrun Clutch (4.5mm) (40 Teeth) 1995-Up	1
73156GG	Pressure Plate, RG4R01A/JR403E Overrun Clutch (4.8mm) (40 Teeth) 1995-Up	1
73156GJ	Pressure Plate, RG4R01A/JR403E Overrun Clutch (4.9mm) (40 Teeth) 1995-Up	1

PART #	VALVE BODY KITS	QTY.	REFERENCE #
S73165A	Shift Correction Package, RE4R01A/JR403E 1989-00 (Superior)	1	KRE4R01A
T73165A	Shift Kit, RE4R01A(R4A-EL/R4AX-EL)/JR403E (Transgo)	1	SK ® RE4R01A
S73165G	Shift Correction Package, RG4R01A(JR403E) 1988-Up (Superior) (For Regular, Heavy Duty & Extreme Use)	1	

PART #	OIL SEALING RINGS	QTY.	REFERENCE #
73175	Ring Kit, RL4R01A/RE4R01A/RE4R03A/RG4R01A/JR403E 1987-Up	1	
73176	Ring, RL4R01A/RE4R01A/RE4R03A/RG4R01A/JR403E Pump Slide (Metal)	1	
73179T	Ring, RL4R01A/RE4R01A/RE4R03A/RG4R01A/JR403E Reverse Clutch (Teflon)	2	
93180T	Ring, RL4R01A/RE4R01A/RE4R03A/RG4R01A/JR403E High Clutch (Teflon)	2	
73181T	Ring, RL4R01A/RE4R01A/RE4R03A/RG4R01A/JR403E Forward & Overrun	4	

© Whatever It Takes Transmission Parts. Inc.

PART #	WASHERS & BEARINGS	QTY.	REFERENCE #
73189T	Ring, RL4R01A Governor (Teflon)	3	
73201A	Bearing Kit, RL4R01A/RE4R01A (Thrust Bearings)	1	
73201G	Bearing Kit, RG4R01A/JR403E (Thrust Bearings)	1	
93211	Washer, RL4R01A/RE4R01A/RG4R01A/RE4R03A/JR403E Stator To Reverse Drum (.028") Plastic	1	31528-21X00
93211A	Washer, RL4R01A/RE4R01A/RG4R01A/RE4R03A/JR403E Stator To Reverse Drum (.035") Plastic	1	31528-21X01
93211B	Washer, RL4R01A/RE4R01A/RG4R01A/RE4R03A/JR403E Stator To Reverse Drum (.043") Plastic	1	31528-21X02
93211C	Washer, RL4R01A/RE4R01A/RG4R01A/RE4R03A/JR403E Stator To Reverse Drum (.051") Plastic	1	31528-21X03
93211D	Washer, RL4R01A/RE4R01A/RG4R01A/RE4R03A/JR403E Stator To Reverse Drum (.059") Plastic	1	31528-21X04
93211E	Washer, RL4R01A/RE4R01A/RG4R01A/RE4R03A/JR403E Stator To Reverse Drum (.067") Plastic	1	31528-21X05
93211F	Washer, RL4R01A/RE4R01A/RG4R01A/RE4R03A/JR403E Stator To Reverse Drum (.075") Plastic	1	
73211G	Ball Bearing, RG4R01A/JR403E Stator To PTO Gear	1	
73220	Bearing W/Race, RL4R01A/RE4R01A/RE4R03A/RG4R01A/JR403E Stator To High Drum	1	
93221	Race, RL4R01A/RE4R01A/RG4R01A/JR403E Stator To High Drum (.031") 3 Tab (Metal)	1	31429-21X00
93221A	Race, RL4R01A/RE4R01A/RG4R01A/JR403E Stator To High Drum (.039") 3 Tab (Metal)	1	31429-21X01
93221AA	Race, RL4R01A/RE4R01A/RG4R01A/JR403E Stator To High Drum (.047") 3 Tab (Metal)	1	31429-21X02
93221AB	Race, RL4R01A/RE4R01A/RG4R01A/JR403E Stator To High Drum (.055") 3 Tab (Metal)	1	31429-21X03
93221AC	Race, RL4R01A/RE4R01A/RG4R01A/JR403E Stator To High Drum (.063") 3 Tab (Metal)	1	31429-21X04
93221AD	Race, RL4R01A/RE4R01A/RG4R01A/JR403E Stator To High Drum (.071") 3 Tab (Metal)	1	31429-21X05
93221AE	Race, RL4R01A/RE4R01A/RG4R01A/JR403E Stator To High Drum (.079") 3 Tab (Metal)	1	31429-21X06
73225G	Bearing W/Race, RG4R01A/JR403E PTO Drive Gear To Front Support	1	
73228	Race, RL4R01A/RE4R01A/RE4R03A/RG4R01A/JR403E High Drum To Hub (Metal With 3 Inner Tabs)	1	31439-21X00
73229	Bearing W/Race, RL4R01A/RE4R01A/RE4R03A/RG4R01A/JR403E High Drum To Hub (Use 53232)	1	31438-X0100
73229A	Bearing W/Races, RL4R01A/RE4R01A High Hub To High Drum (.150" Thick)	1	
53232	Bearing W/Race, RL4R01A/RE4R01A/RE4R03A/RG4R01A/JR403E High Drum To Hub (.110" Thick) (Also Fits RL4R01A/RE4R01A High Hub To Sun Shell)	1-2	31438-X0101
73232	Bearing W/Race, RL4R01A/RE4R01A/RE4R03A/RG4R01A/JR403E Forward Drum To Hub	1	
73232B	Shim, RL4R01A/RE4R01A/RE4R03A Forward Drum To Hub (Update Replaces Bearing W/Race)	1	31407-41X05
73235	Caged Needle Bearing, RL4R01A/RE4R01A/RE4R03A/RG4R01A/JR403E Forward Drum (Rear)	1	31455-41X02
73238	Bearing W/Races, RL4R01A/RE4R01A Front Planet To Rear Sun Gear	1	31407-41X08
73238G	Bearing W/Race, RG4R01A/JR403E Front Planet To Rear Sun Gear	1	31407-71X03
73238Q	Bearing W/Race, RE4R03A Front Planet To Rear Sun Gear (Use 73247)	1	31455-21X00
73241	Bearing W/Race, RL4R01A/RE4R01A High Hub To Sun Shell (Use 53232)	1	
73241G	Bearing W/Race, RE4R03A/RG4R01A/JR403E High Hub To Sun Shell (Also Fits Shell To Front Planet)	1-2	31407-51X05
73243	Race, RL4R01A/RE4R01A Shell To Front Planet & Rear Planet To Ring Gear (4 Tab)	2	31464-21X00
73243B	Race, RE4R01A Shell To Front Planet (5 Tab) 1998-Up	1	
73243G	Race, RE4R03A/RG4R01A/JR403E Shell To Front Planet (3 3/4"OD) 4 Outer Tabs	1	31435-51X00
73243GA	Race, RG4R01A/JR403E Rear Planet To Rear Ring Gear (4 Outer Tabs)	1	31435-41X00
73243QA	Race, RE4R03A Rear Planet To Rear Ring Gear (2 3/8"OD) 4 Outer Tabs	1	31435-51X01
73244	Bearing W/Race, RL4R01A/RE4R01A Shell To Front Planet & Rear Planet To Rear Ring Gear	2	31435-21X00
73244G	Bearing W/Race, RE4R03A/RG4R01A/JR403E Shell To Front Planet (Use 73241G)	1	31407-51X01
73244GA	Bearing W/Race, RG4R01A/JR403E Rear Planet To Rear Ring Gear	1	
73244Q	Bearing W/Race, RE4R03A Rear Planet To Rear Ring Gear	1	31407-51X03
73247	Bearing W/Race, RL4R01A/RE4R01A/RE4R03A Rear Sun Gear To Rear Planet (Also Fits RE4RO3A Front Planet To Rear Sun Gear)	1-2	
73247G	Bearing W/Race, RG4R01A/JR403E Rear Sun Gear To Rear Planet	1	
73254	Washer, RL4R01A/RE4R01A Rear Planet Ring Gear To Clutch Hub (3 13/16"OD) Plastic	1	31508-41X00
73254G	Washer, RE4R03A/RG4R01A/JR403E Rear Planet Ring Gear To Clutch Hub (4 5/16"OD) Plastic	1	31508-51X08
73260	Bearing W/Race, RL4R01A/RE4R01A Overrun Hub To Rear Support	1	31407-41X04
73260A	Bearing W/2 Races, RL4R01A/RE4R01A Overrun Hub To RearSupport	1	31407-41X11
73260G	Bearing W/Race, RE4R03A/RG4R01A/JR403E Ovverun Hub To Rear Support	1	31407-51X02
73263	Bearing W/Race, RL4R01A/RE4R01A Case To Park Gear	1	31407-41X06
73263G	Ball Bearing, RG4R01A/JR403E Case To Output Shaft (1.573"ID) (3.148"OD)	1	
73263Q	Bearing W/Race, RE4R03A Case To Park Gear	1	31407-41X11
73271G	Ball Bearing, RG4R01A/JR403E Output Shaft To Extension Housing (1.370"ID) (2.834"OD)	1	
73286	Washer, RL4R01A/RE4R01A Low Sprag To Snap Ring	1	

© Whatever It Takes Transmission Parts. Inc.

PART #	GASKETS & RUBBER COMPONENTS	QTY.	REFERENCE #
73300	Gasket, RL4R01A/RE4R01A/RE5R01A Bottom Pan	1	31397-41X01
73300G	Gasket, RE4R03A/RG4R01A/JR403E Bottom Pan	1	
73305A	Gasket, RL4R01A/RE4R01A Extension Housing	1	31338-41X01
73310	Gasket, RL4R01A/RE4R01A Pump	1	31366-41X01
73310A	Gasket, RE4R01A/RE5R01A Pump (With Input Speed Sensor Cut Out)	1	31366-51X00
73310G	Gasket, RG4R01A/JR403E Pump	1	
73310Q	Gasket, RE4R03A Pump	1	
73311	O-Ring, RL4R01A/RE4R01A/RE4R03A/RG4R01A/JR403E Pump	1	
73320A	Gasket, RE4R01A Valve Body (Upper) 1987-03 (All Except R4AEL Mazda RX7, 929 & RE4R03A/RE5R01A)	1	
73321A	Gasket, RE4R01A Valve Body (Lower) 1987-03 (All Except R4AEL Mazda RX7, 929 & RE4R03A/RE5R01A)	1	
53352K	O-Ring Kit, RL4R01A/RE4R01A Accumulator	1	
44371A	O-Ring, RL4R01A/RE4R01A Filler Tube	1	6264902
73379	O-Ring, RE4R01A Filter	1	
73386G	Seal, RG4R01A/JR403E Front Support (Reverse Drum Support) To Case (Takes 4 Per Transmission)	4	

PART #	TECHNICAL MANUALS	QTY.	REFERENCE #
73400	Technical Manual, RE4R01A	1	83-RE4R01ATM
73400A	Technical Manual, RL4R01A	1	
73400G	Technical Manual, RG4R01A/JR403E Electromatic	1	

PART #	ELECTRICAL COMPONENTS	QTY.	REFERENCE #
73410A	Switch, RE4R01A Neutral Safety (Pathfinder/Pick-Up) 1988-89	1	31918-41X03
73410AA	Switch, RE4R01A Neutral Safety (Van) 1988-89	1	31918-41X07
73410AB	Switch, RE4R01A Neutral Safety (240SX) 1988-89	1	31918-41X10
73410AC	Switch, RE4R01A Neutral Safety (Pathfinder/Pick-Up 4 Cylinder) 1990-Up	1	31918-41X17
73410AD	Switch, RE4R01A Neutral Safety (Pathfinder/Pick-Up 6 Cylinder) 1990-Up	1	31918-41X22
73410AE	Switch, RE4R01A Neutral Safety (300ZX Without Turbo) 1990-93	1	31918-41X24
73410AG	Switch, RE4R01A Neutral Safety (300ZX Without Turbo) 1994-Up	1	31918-41X73
73410GA	Switch, JR403E Neutral Safety (18 1/2" Long Wire Harness With 1 Nine Prong Connector)	1	
73410GB	Switch, JR403E Neutral Safety (19 3/4" Long Wire Harness With 1 Two Prong Connector & Switch, JR403E Neutral Safety (19 3/4" Long Wire Harness With 1 Two Prong Connector &	1	
73410Q	Switch, RE4R03A Neutral Safety (300ZX With Turbo) 1990-93	1	31918-51X16
73410QA	Switch, RE4R03A Neutral Safety (300ZX With Turbo) 1994-Up	1	31918-51X16
73420A	Solenoid Assembly, RE4R01A/RE4R03A/JR403E (4 Solenoids, 2 Insulated Connectors, 1 Ground Wire) 5/1988-Up	1	31940-41X04
73420AA	Solenoid Assembly, RE4R01A (3 Solenoid, 2 Insulated Connectors, 1 Ground Wire) 8/1987-4/1988	1	31940-41X03
73420Q	Solenoid Assembly, RE4R03A 5/1988-Up	1	31940-41X09
73425	Solenoid, RE4R01A/RG4R01A/RE4R03A/JR403E/R4A-EL (Lock-Up)1988-Up	1	31940-41X10
73427A	Solenoid, RL4R01A Lock-up & Overdrive Cancel 1987-Up	2	
73436A	Sensor, RE4R01A Output Speed (Pathfinder/Pick-Up) 1988-89	1	31935-42X09
73436AA	Sensor, RE4R01A Output Speed (Van) 1988-89	1	31935-41X10
73436AB	Sensor, RE4R01A Output Speed (240SX) 1988-89	1	31935-41X07
73436AC	Sensor, RE4R01A Output Speed (2WD) 1990-Up	1	31935-42X23
73436AD	Sensor, RE4R01A Output Speed (4x4) 1990-Up	1	31935-42X63
73436AE	Sensor, RE4R01A Output Speed (240SX) 1990-Up	1	31935-41X20
73436AG	Sensor, RE4R01A Output Speed (300ZX Without Turbo) 1990-Up	1	31935-42X19
73436G	Sensor, JR403E Output Speed (With 6" Wire Harness With 2 Prong Connector)	1	
73436Q	Sensor, RE4R03A Output Speed (Q45, Mazda, 300ZX With Turbo) 1990-Up	1	31935-51X14
73438A	Sensor, RE4R01A/RE4R03A Input Speed (With 13" Wire Harness)	1	
73438Q	Sensor, RE4R01A/RE4R03A Input Speed (With 9" Wire Harness)	1	
73445G	Wire Harness, JR403E Internal/External (20" Long With 2 Two Wire Connectors And 1 One Wire Connector & 1 Temperature Switch On The Internal Side)	1	

PART #	HARD PARTS	QTY.	REFERENCE #
73510AA	Pump Body, RL4R01A/RE4R01A (With 2 Lugs On Rotor)(Does Not Use Input Speed Sensor)	1	
73510AB	Pump Body, RE4R01A (With 2 Lugs On Rotor)(Uses Input Speed Sensor)	1	
73510AE	Pump Body, RE4R01A (With 2 lugs On Rotor) Fits Stator With .845"ID Front Bushing	1	
73510G	Pump Body, RL4R01A/RE4R01A/RG4R01A/JR403E (With Mill Flat Rotor)(Does Not Use Input Speed Sensor)	1	
73510Q	Pump Body, RE4R03A (With Mill Flat Rotor)	1	

© Whatever It Takes Transmission Parts. Inc.

PART #	HARD PARTS (Continued)	QTY.	REFERENCE #
73511G	Ring, RG4R01A/JR403E Outer Pump Body (Steel With 10 Bolts)	1	
73520AA	Stator, RL4R01A/RE4R01A (.945"ID Front Bushing)(Does Not Use Input Speed Sensor)(3 1/2" From End Of Shaft To The Step At The Base)(Uses A Lug Type Rotor)(Can Use 73520AAA)	1	
73520AAA	Stator, RL4R01A/RE4R01A (.945"ID Front Bushing)(Does Not Use Input Speed Sensor)(3 5/8" From End Of Shaft To The Step At The Base)(Uses A Milled Flat Type Rotor)	1	
73520AB	Stator, RE4R01A (.945"ID Front Bushing)(Uses ISS Sensor On Back)(3 1/2" From Front End Of Shaft To The Step At The Base)	1	
73520AC	Stator, RE4R01A (.945"ID Front Bushing)(Uses ISS Sensor On Back)(3 5/8" From Front End Of Shaft To The Step At The Base)	1	
73520AE	Stator, RE4R01A (.845"ID Front Bushing)	1	
73520G	Stator, RG4R01A/JR403E	1	
73520Q	Stator, RE4R03A (1.045"ID Front Bushing) With Hole For Switch (4 3/16" Long Shaft)	1	
73520QA	Stator, RE4R03A (1.045"ID Front Bushing) No Hole For Switch (3 3/16" Long Shaft)	1	

PART #	PUMP COMPONENTS	QTY.	REFERENCE #
73532	Rotor, RL4R01A/RE4R01A Pump (With 2 Lugs)	1	
73532G	Rotor, RG4R01A/JR403E Pump (With Mill Flats)	1	
73532Q	Rotor, RE4R03A Pump (With Mill Flats)	1	
73533	Vane, RL4R01A/RE4R01A/RE4R03A/RG4R01A/JR403E Pump	13	
73534	Slide, RL4R01A/RE4R01A Pump	1	
73534G	Slide, RE4R03A/RG4R01A/JR403E Pump	1	

PART #	HARD PARTS (Continued)	QTY.	REFERENCE #
73554	Drum, RL4R01A/RE4R01A Forward Clutch (7 7/8" Tall) 5-7 Clutch (Less Sprag) Low/Reverse Clutch Hub Spline Length Is 1.765" Tall	1	
73554A	Drum, RE4R01A Forward Clutch (7 7/8" Tall) 5-7 Clutch (Less Sprag) Low/Reverse Clutch Hub Spline Length Is 1.645" Tall	1	
73554B	Drum, RE4R01A Forward (7 7/8" Tall) 5-7 Clutch (less Sprag) Low/Reverse Clutch Hub Spline Length Is 1.645: Tall (Uses 34 Element Sprag)	1	
73554G	Drum, RG4R01A/JR403E Forward Clutch (9 1/8" Tall) Less Sprag (With Bushing #048 Inside)	1	
73554GA	Drum, RG4R01A/JR403E Forward Clutch (9 1/8" Tall) Less Sprag (With Bearing #048 Inside) 3.850"ID Sprag Outer Race	1	
73554GB	Drum, RG4R01A/JR403E Forward Clutch (9" Tall) Less Sprag (With Bearing #048 Inside) 3.720"ID Sprag Outer Race	1	
73554Q	Drum, RE4R03A Forward Clutch (8 3/4" Tall) Less Sprag	1	
93555	Drum, RL4R01A/RE4R01A High (27 Teeth Steels) 5 3/4"OD (With 34 Teeth Reverse Hub) 1987-92	1	31541-21X05
73555A	Drum, RL4R01A/RE4R01A High (27 Teeth Steels) 5 3/4"OD (With 30 Teeth Reverse Hub) (2.100" Tall) 1987-Up	1	
73555B	Drum, RE4R01A High (27 Teeth) 5 3/4"OD (With 30 Teeth Reverse Hub)(2.515" Tall) 1998-Up	1	
73555G	Drum, RG4R01A/JR403E High (6 Clutch) 6 5/8"OD	1	
73555Q	Drum, RE4R03A High (6 Clutch) 6 5/8"OD	1	
73555QA	Drum, RE4R03A High (7 Clutch) 6 5/8"OD	1	
73556	Drum, RL4R01A/RE4R01A Reverse (2 Clutch) 6 5/8"OD (8 Drive Lugs)	1	
73556A	Drum, RL4R01A/RE4R01A Reverse (2 Clutch) 6 5/8"OD (12 Drive Lugs)	1	
73556G	Drum, RE4R03A/RG4R01A/JR403E Reverse (3 Clutch) 7 1/8"OD	1	
73564	Piston Kit, RL4R01A/RE4R01A Forward Clutch	1	
73564G	Piston Kit, RG4R01A/JR403E Forward Clutch	1	
73564Q	Piston Kit, RE4R03A Forward Clutch	1	
73565	Piston Kit, RL4R01A/RE4R01A High Drum (With 16 Springs) 1987-Up	1	
73565A	Piston Kit, RL4R01A/RE4R01A High Drum (W/10 Springs) 1987-Up (Fits 73555A)	1	
73565B	Piston Kit, RE4R01A High Drum (With 10 Springs) 1998-Up (Fits 73555B)	1	
73565G	Piston Kit, RG4R01A/JR403E High Clutch	1	
73565Q	Piston Kit, RE4R03A High Clutch	1	
73566	Piston Kit, RL4R01A/RE4R01A Reverse Clutch (With 16 Return Springs) 1987-Up	1	
73566A	Piston Kit, RL4R01A/RE4R01A Reverse Clutch (With 20 Finger Diaphram Return Spring) 98-Up	1	
73566G	Piston Kit, RG4R01AJR403E Reverse Clutch	1	
73566Q	Piston Kit, RE4R03A Reverse Clutch	1	
73567	Piston Kit, RL4R01A/RE4R01A Low/Reverse Clutch	1	
73567G	Piston Kit, RG4R01A/JR403E Low/Reverse Clutch (Does Not Use A Snap Ring #886 To Hold It To The Case)	1	
73567GA	Piston Kit, RG4R01A/JR403E Low/Reverse Clutch (Uses A Snap Ring #886 To Hold It To The Case)	1	
73567Q	Piston Kit, RE4R03A Low/Reverse Clutch	1	
73574	Clutch Hub, RL4R01A/RE4R01A Forward (Less Sprag) 5 1/4"OD (Clutch Hub Is 1.330" Tall At Clutch Splines)	1	

© Whatever It Takes Transmission Parts. Inc.

73574A	Clutch Hub, RE4R01A Forward (Less Sprag) 5 1/4"OD (Clutch Hub Is 1.180" Tall At Clutch Splines)	1	
73574G	Clutch Hub, RE4R03A/RG4R01A/JR403E Forward (Less Sprag) 6"OD	1	269165E
93575A	Clutch Hub, RL4R01A/RE4R01A High Clutch (Cast Iron) Wide Teeth (Uses A .150" Thick Bearing #229) 1987-Up	1	
73575G	Clutch Hub, RE4R03A/RG4R01A/JR403E High (5 1/8"OD)	1	26996G
73579	Clutch Hub, RL4R01A/RE4R01A Overrun (4 5/8"OD)	1	31591-41X01
73579G	Clutch Hub, RE4R03A/RG4R01A/JR403E Overrun (5 5/16"OD)	1	31591-51X00
73582	Planet, RL4R01A/RE4R01A Front (3 Gear)(33 Teeth Front Sun Gear) With 1.885"OD Hub (2 Groove) 1987-Up	1	31420-41X08
73582A	Planet, RL4R01A/RE4R01A Front (3 Gear)(33 Teeth Front Sun Gear) With 1.885"OD Hub (No Groove) 1987-Up	1	
73582B	Planet, RL4R01A/RE4R01A Front (3 Gear)(33 Teeth Front Sun Gear) With 1.910"OD Hub (1 Groove) 1987-Up	1	
73582BA	Planet, RE4R01A Front (4 Gear)(33 Teeth Front Sun Gear) With 1.910"OD Hub 1998-Up	1	
73582G	Planet, RG4R01A/JR403E Front (40 Teeth Front Sun Gear) 33 Teeth On Pinions	1	50296
73582Q	Planet, RE4R03A Front (40 Teeth Front Sun Gear) 26 Teeth On Pinions	1	
73583	Planet Kit, RL4R01A/RE4R01A (37 Teeth Rear Sun Gear) Included # 622 To #594	1	JSWH7
73583B	Planet Kit, RL4R01A/RE4R01A (42 Teeth Rear Sun Gear) Includes #622 To #594 (42 Teeth Sun Gear With 4 Notches) (Shell Has 33 Teeth, 1.885"OD, 8 Lugs)	1	JWH11
73583BA	Planet Kit, RL4R01A/RE4R01A (42 Teeth Rear Sun Gear) Includes #622 To #594 (42 Teeth Sun Gear With 4 Notches) (Shell Has 33 Teeth, 1.910"OD, 8 Lugs)	1	
73583BB	Planet Kit, RL4R01A/RE4R01A (42 Teeth Rear Sun Gear) Includes #622 To #594 (42 Teeth Sun Gear With 4 Notches) (Shell Has 33 Teeth, 1.910"OD, 12 Lugs)	1	
73583G	Planet Kit, RG4R01A/JR403E (44 Teeth Rear Sun Gear) Includes #622 To #594	1	
73583Q	Planet Kit, RE4R03A (51 Teeth Rear Sun Gear) Includes #622 To #594	1	
73583QD	Planet Kit, RE4R03A (58 Teeth Rear Sun Gear) Includes #622 To #594	1	
73584	Planet, RL4R01A/RE4R01A Rear (4 Gear)(37 Teeth Rear Sun Gear) 2 Groove 1987-Up	1	31440-41X08
73584A	Planet, RL4R01A/RE4R01A Rear (37 Teeth Rear Sun Gear) No Groove	1	31440-41X04
73584B	Planet, RL4R01A/RE4R01A Rear (4 Gear)(42 Teeth Rear Sun Gear) No Groove 1987-Up	1	31440-41X13
73584C	Planet, RL4R01A/RE4R01A Rear (4 Gear)(42 Teeth Rear Sun Gear) 1 Groove 1987-Up	1	31440-41X10
73584D	Planet, RE4R01A Rear (5 Gear)(42 Teeth Rear Sun Gear) 1998-Up	1	
73584G	Planet, RG4R01A/JR403E Rear (44 Teeth Rear Sun Gear)	1	31440-71X02
73584Q	Planet, RE4R03A Rear (51 Teeth Rear Sun Gear)	1	31440-51X84
73584QD	Planet, RE4R03A Rear (58 Teeth Rear Sun Gear)	1	
73592G	Ring Gear, RG4R01A/JR403E Front Planet (6 1/4"OD)	1	
73592Q	Ring Gear, RE4R03A Front Planet	1	
73594	Ring Gear, RL4R01A/RE4R01A Rear Planet (37 Teeth Rear Sun Gear) 2 Groove	1	31450-41X01
73594A	Ring Gear, RL4R01A/RE4R01A Rear Planet (37 Teeth Rear Sun Gear) No Groove	1	
73594B	Ring Gear, RL4R01A/RE4R01A Rear Planet (42 Teeth Rear Sun Gear) No Groove	1	
73594C	Ring Gear, RL4R01A/RE4R01A Rear Planet (42 Teeth Rear Sun Gear) 1 Groove	1	
73594G	Ring Gear, RG4R01A/JR403E Rear Planet (44 Teeth Rear Sun Gear)	1	50297
73594Q	Ring Gear, RE4R03A Rear Planet (51 Teeth Rear Sun Gear)	1	
73614	Sun Gear, RL4R01A/RE4R01A Rear (37 Teeth) 2 Groove	1	
73614A	Sun Gear, RL4R01A/RE4R01A Rear (37 Teeth) No Groove	1	31469-41X01
73614B	Sun Gear, RL4R01A/RE4R01A Rear (42 Teeth) No Groove	1	31469-41X04
73614C	Sun Gear, RL4R01A/RE4R01A Rear (42 Teeth) 1 Groove	1	31469-41X02
73614G	Sun Gear, RG4R01A/JR403E Rear (44 Teeth)	1	50296B
73614Q	Sun Gear, RE4R03A Rear (51 Teeth)	1	
73614QD	Sun Gear, RE4R03A Rear (58 Teeth)	1	
73622	Shell, RL4R01A/RE4R01A (With 33 Teeth Sun Gear) 1.885"OD (2 Groove)	1	
73622A	Shell, RL4R01A/RE4R01A (With 33 Teeth Sun Gear) 1.885"OD (No Groove)	1	
73622B	Shell, RL4R01A/RE4R01A (With 33 Teeth Sun Gear) 1.910"OD (8 Lugs)	1	31460-41X02
73622C	Shell, RL4R01A/RE4R01A (With 33 Teeth Sun Gear) 1.910"OD (12 Lugs)	1	
73622G	Shell, RE4R03A/RG4R01A/JR403E (With 40 Teeth Sun Gear)	1	26998A
73630G	Support, RG4R01A/JR403E Front (Reverse Clutch Drum Support)	1	

PART #	SPRAGS & ONE WAY CLUTCHES	QTY.	REFERENCE #
73656	Sprag, RL4R01A/RE4R01A Front (28 Elements)	1	
73656G	Sprag, RE4R03A/RG4R01A/JR403E Front (30 Elements)	1	
23658	Sprag, RL4R01A/RE4R01A/RG4R01A/JR403E Low Sprag (34 Elements)(.404" Wide Elements)	1	
73658A	Sprag, RL4R01A/RE4R01A Low Sprag (30 Elements) (.406" Wide Elements) 1987-Up	1	
73658Q	Sprag, RE4R03A/JR403E Low Sprag (30 Elements) (3 7/8" ID) (.530" Wide	1	31473-41X02
73658QA	Sprag, RE4R03A/JR403E Low Sprag (34 Elements) (3 7/8" ID) (.530" Wide	1	

© Whatever It Takes Transmission Parts. Inc.

PART #	HARD PARTS (Continued)	QTY.	REFERENCE #
73668	Rear Support, RL4R01A/RE4R01A (With 1 Lube Hole On Sprag Area)	1	
73668A	Rear Support, RL4R01A/RE4R01A (With 4 Lube Holes On Sprag Area)	1	
73668G	Rear Support, RE4R03A/RG4R01A/JR403E (With 4 Small O-Rings Between Support & Case) 2.441”OD Front Bushing Surface (Uses A Bushing #048) 3.602” Overall Length	1	31472-51X00
73668GA	Rear Support, RE4R03A/RG4R01A/JR403E (With 4 Small O-Rings Between Support & Case) 2.338”OD Front Bearing Surface (Uses A Bearing # 048) 3.602” Overall Length	1	
73668GB	Rear Support, RE4R03A/RG4R01A/JR403E (With 4 Small O-Rings Between Support & Case) 2.338”OD Front Bearing Surface (Uses A Bearing # 048) 3.559” Overall Length	1	
73668GC	Rear Support, RE4R03A/RG4R01A/JR403E (With 4 Small O-Rings Between Support & Case) 2.441”OD Front Bushing Surface (Uses A Bushing #048) 3.559” Overall Length	1	
73668GD	Rear Support, RE4R03A/RG4R01A/JR403E (With 3 Small O-Rings Between Support & Case) 2.441”OD Front Bushing Surface (Uses A Bushing # 048) 3.559” Overall Length	1	
73670	Input Shaft, RL4R01A/RE4R01A (12 3/8” Long) With 20 Splines On Converter End (No Electric Pick-Up In Middle Of Shaft)	1	
73670AA	Input Shaft, RL4R01A/RE4R01A (12 3/8” Long) With 20 Splines On Converter End (With Electric Pick-Up In Middle Of Shaft)	1	
73670AE	Input Shaft, RE4R01A (12 3/8” Long) With 18 Splines On Converter End	1	
73670G	Input Shaft, RG4R01A/JR403E (17 3/4” Long)	1	
73670Q	Input Shaft, RE4R03A (15” Long)	1	
73678	Output Shaft, RL4R01A/RE4R01A 4x4 (13 5/8” Long) With 30 Splines	1	
73678A	Output Shaft, RL4R01A/RE4R01A 4x4 (11 1/4” Long) With 25 Splines	1	
73678AA	Output Shaft, RL4R01A/RE4R01A 4x4 (13” Long) With 30 Splines	1	
73678B	Output Shaft, RL4R01A/RE4R01A 2WD (19 1/4” Long) Speed-O Gear Slides Off	1	
73678C	Output Shaft, RL4R01A/RE4R01A 2WD (19 1/4” Long) With 7 Teeth Speed-O Gear Made On Shaft	1	
73678CA	Output Shaft, RL4R01A/RE4R01A 2WD (19 1/4” Long) With 6 Teeth Speed-O Gear Made On Shaft	1	
73678G	Output Shaft, RG4R01A/JR403E 2WD (15 32/8” Long) With Bolt On Yoke	1	
73678Q	Output Shaft, RE4R03A 2WD (18 1/2” Long)	1	
73680A	Governor, RL4R01A	1	
73690	Park Gear, RE4R01A (No Governor Type) No Rings (Solid)	1	
73690A	Park Gear, RL4R01A (Governor Type) With 3 Sealing Rings	1	
73690G	Park Gear, RG4R01A/JR403E (6 1/2” Diameter) 1 3/16” Thick At Lugs	1	
73690Q	Park Gear, RE4R03A (Governor Type) No Rings (Notched Out)	1	
73740	Valve Body, RL4R01A (2 Solenoids) With T.V. Kickdown	1	
73740A	Valve Body, RE4R01A (5 Solenoids) With 3 Connectors	1	
73740AA	Valve Body, RE4R01A (5 Solenoids) With 4 Connectors	1	
73740AB	Valve Body, RE4R01A (1 Solenoid) 4 Cylinder Truck	1	
73740AE	Valve Body, RE4R01A (6 Solenoids) With 3 Connectors	1	
73740G	Valve Body, RG4R01A/JR403E (5 Solenoids)	1	
73740Q	Valve Body, RE4R03A	1	
73740R	Valve Body, RE5R01A (6 Solenoids) With 2 Connectors	1	
73750	Bell Housing, RL4R01A/RE4R01A (4 3/8” Top Bolts) Starter At 8:00 (Cast # 301) Has A Crank Sensor In The Bell 1990-Up	1	
73750A	Bell Housing, RL4R01A/RE4R01A (4 3/8” Top Bolts) Starter At 8:00 (Cast #301) Has No Crank Sensor In The Bell 1990-Up	1	
73750AA	Bell Housing, RL4R01A/RE4R01A (4 3/8” Top Bolts) Starter At 9:00 (Cast #ZV)	1	
73750AC	Bell Housing, RL4R01A/RE4R01A (1988-89 All & 1990-Up 6 Cylinder)		
73750B	Bell Housing, RL4R01A/RE4R01A (4 3/8” Top Bolts) Starter At 10:00 (Cast #TA-1) 1990-Up	1	
73750C	Bell Housing, RE4R01A (4 3/8” Top Bolts) Square Starter Hole At 8:00 (With 2 Threaded Bosses Behind Starter) Cast #VG#1	1	
73750D	Bell Housing, RL4R01A/RE4R01A (2 13/16” Top Bolts) Starter At 8:00 (Cast #BM003)	1	
73750DA	Bell Housing, RL4r01A/RE4R01A (2 13/16” Top Bolts) Starter At 8:00 (Cast #BV11)	1	
73750G	Bell Housing, RG4R01A/Jr403E (5 5/8”) 8 Bolts To Case (No Starter)	1	
73750GA	Bell Housing, RG4R01A (5 5/8”) 8 Bolts To Case (Starter At 2:00)	1	
73750GD	Bell Housing, RG4R01A (7 3/8”) 8 Bolts To Case (Starter At 3:00)	1	
73750GJ	Bell Housing, RG4R01A (8 1/2”) 9 Bolts To Case (Starter At 1:00)	1	
73750Q	Bell Housing, RE4R03A (6 1/4” Top Bolts) Starter At 9:00 (Cast #NX #1)	1	
73750QA	Bell Housing, RE4R03A (6 1/4” Top Bolts) Starter At 3:00 (Cast #NX #2) 2WD	1	
73760A	Case, RE4R01A (With Vent On Top Rear Of Case) 1990-Up	1	
73760AA	Case, RE4R01A (With Sensor Thru Case At Pump Area)	1	
73760B	Case, RE4R01A (With Vent On Top Front Of Case) 1990-Up	1	
73760C	Case, RL4R01A (Has Steel Sleeve In Rear For Governor Bore)	1	
73760G	Case, RG4R01A/JR403E (18 5/8”) 8 Bolts To Bell (With PTO)	1	
73760GA	Case, RG4R01A (18 5/8”) 9 Bolts To Bell (With PTO)	1	
73760Q	Case, RE4R03A (15 1/2” Long) With Speed Sensor In Pump	1	
73760QA	Case, RE4R03A (15 1/2” Long) No Speed Sensor In Pump	1	
73760R	Case, RE5R01A (With Vent On Top Rear)	1	

© Whatever It Takes Transmission Parts. Inc.

PART #	CASE COMPONENTS	QTY.	REFERENCE #
73761A-2	Sleeve, Governor Bore 1987-89 (Non Electronic Units Only)	1	

PART #	HARD PARTS (Continued)	QTY.	REFERENCE #
73763G	Brake Drum, RG4R01A/JR403E Parking Brake (ON Extension Housing)	1	
73765	Pan, RL4R01A/RE4R01A (2.520” Deep) 18 Holes (No Drain)	1	
73765A	Pan, RE4R01A (2.350” Deep) 18 Holes (With Drain)	1	
73765B	Pan, RE4R01A 4x4 (3.410” Deep) With Skid Plate	1	
73765G	Pan, RG4R01A/JR403E	1	
73765Q	Pan, RE4R03A (2WD)	1	
73770	Extension Housing, RL4R01A/RE4R01A 2WD (11 1/2” Long) Speed-O Hole Is 5 3/4” From Seal To Center Of Speed-O Hole	1	
73770A	Extension Housing, RL4R01A/RE4R01A 2WD (11 1/2” Long) Speed-O Hole Is 5” From Seal To Center Of Speed-O Hole	1	
73770AA	Extension Housing, Rl4R01A/RE4R01A 2WD (8 3/4” Long) 4 Bolt Mount On Top	1	
73770AC	Extension Housing, RE4R01A/RE4R03A 2WD (5” Long) 2 Bolt Mount On Top & 2 Bolt Mount On Bottom (With Speed-O Hole & Sensor Hole)	1	
73770B	Extension Houisng, RL4R01A/RE4R01A 4x4 (5 1/8” Long)	1	
73770BA	Extension Housing, RL4R01A/RE4R01A 4x4 (6 5/16” Long)	1	
73770G	Extension Housing, RG4R01A/JR403E 2WD (6 1/8” Long)	1	
73770GB	Extension Housing, RG4R01A 2WD (6 1/8” Long) With 3 Bolt Mount On Top	1	
73770GD	Extension Housing, RG4R01A 2WD (6 1/8” Long) With 4 Bolt Mount On Top	1	
73770Q	Extension Housing, RE4R03A 2WD (11” Long) Cast #1A	1	
73770R	Extension Housing, RE5R01A 2WD (13 1/4” Long)	1	
73776K	Bolt Set, RL4R01A/RE4R01A Bell To Case	1	
73778K	Bolt Set, RL4R01A/RE4R01A Pump Body to Stator	1	
73779K	Bolt Set, RL4R01A/RE4R01A Pan To Case	1	
73781K	Bolt Set, RL4R01A/RE4R01A Case To Extension Housing	1	
73782K	Bolt Set, RL4R01A/RE4R01A Valve Body To Case	1	
73790K	Bolt Set, RL4R01A Rear Support To Case	1	
73790AK	Bolt Set, RE4R01A Rear Support To Case	1	
73791K	Bolt Set, RL4R01A/RE4R01A Overdrive Servo Cover	1	
73800G	Top Drive Gear, RG4R01A/JR403E (PTO Gear)	1	
73847G	Gear, RG4R01A/JR403E Speed-O Drive (5 Teeth)	1	
73853	Cushion Spring, RL4R01A/RE4R01A Forward Clutch	1	
73853G	Cushion Spring, RE4R03A/RG4R01A/JR403E Forward Clutch	1	
73854	Cushion Spring, RL4R01A/RE4R01A Reverse Clutch	1	
73854G	Cushion Spring, RE4R03A/RG4R01A/JR403E Reverse Clutch	1	
73854K	Drum Saver Kit, RE4R01A Reverse 1988	1	
73854AK	Drum Saver, RE4R01A Reverse 1993-Up	1	
73856	Cushion Spring, RL4R01A/RE4R01A Overrun Clutch	1	
73856G	Cushion Spring, RE4R03A/RG4R01A/JR403E Overrun Clutch	1	
73857	Cushion Spring, RL4R01A/RE4R01A Low/Reverse Clutch	1	
73857G	Cushion Spring, RE4R03A/RG4R01A/JR403E Low/Reverse Clutch	1	
73870	Snap Ring, RL4R01A/RE4R01A Holds Overrun Pressure Plate In Drum	1	
73876	Snap Ring, RL4R1A/RE4R01A Holds Forward Pressure Plate In Drum	1	
73877	Snap Ring, RL4R01A/RE4R01A Holds Forward Clutch Retainer In Drum (.039” Thick) (2.960”OD)	1	
73878	Snap Ring, RL4R01A/RE4R01A Holds High Pressure Plate In Drum (Use 93878)	1	
93878	Snap Ring, RL4R01A/RE4R01A High Drum (.078” Thick) Flat (5 9/16”OD)	1	
93878AA	Snap Ring, RL4R01A/RE4R01A High Drum (.078” Thick) Flat (5 3/8”OD)	1	
73879	Snap Ring, RL4R01A/RE4R01A Holds High Clutch Retainer In Drum	1	
73881	Snap Ring, RL4R01A/RE4R01A Holds Front Sprag In Forward Hub (.042” Thick)(3.325”OD)	2	
73883	Snap Ring, RL4R01A/RE4R01A Front Planet Stop	1	
73885	Snap Ring, RL4R01A/RE4R01A Holds Low/Reverse Pressure Plate In Case (.080” Thick) (6.165”OD) 1987-Up	1	
73888	Snap Ring, RL4R01A/RE4R01A Holds Rear Planet To Output Shaft	1	
73889	Snap Ring, RL4R01A/RE4R01A Holds Bearing #235 To Forward Drum	1	
73890	Snap Ring, RL4R01A/RE4R01A Holds Low Sprag In Forward Drum (.039” Thick)(4.100”OD) 1987-Up	1	
73892	Snap Ring, RL4R01A/RE4R01A Holds Reverse Clutch Pressure Plate In Drum	1	
73893	Snap Ring, RL4R01A/RE4R01A Holds Reverse Clutch Retainer In Drum	1	
73894	Snap Ring, RL4R01A/RE4R01A Holds Park Gear To Output Shaft	1	
73900	Servo Assembly, RL4R01A/RE4R01A Overdrive	1	
73900G	Servo Assembly, RG4R01A/JR403E Overdrive (Cast # 71X00)	1	
73900QC	Servo Assembly, RE4R03A Overdrive (Cast #51X02) 4.098”OD Piston	1	
73900QD	Servo Assembly, RE4R03A Overdrive (Cast #51X03) 4.651”OD Piston)	1	
73901	Spring, RL4R01A/RE4R01A Overdrive Servo	1	

© Whatever It Takes Transmission Parts. Inc.

PART #	HARD PARTS (Continued)	QTY.	REFERENCE #
73902	Piston, RL4R01A/RE4R01A Overdrive Servo	1	
73903	Pin, RL4R01A/RE4R01A Overdrive Servo	1	
73904	Cover, RL4R01A/RE4R01A Overdrive Servo	1	
73907	Retainer, RL4R01A/RE4R01A Overdrive Servo Cover	1	
73917	Strut, RL4R01A/RE4R01A/RE4R03A/RG4R01A/JR403E Overdrive Band	1	
73918	Adjustment Screw, RL4R01A/RE4R01A Overdrive Band (2” Long)	1	
73918G	Adjustment Screw, RG4R01A/JR403E Overdrive Band (2 3/4” Long)	1	
73920	Adjustment Nut, RL4R01A/RE4R01A Overdrive Band	1	
73920G	Adjustment Nut, RG4R01A/JR403E Overdrive Band	1	
73925	Accumulator Assembly, RL4R01A/RE4R01A With Springs	1	
73925G	Accumulator Assembly, RG4R01A/JR403E With Springs	1	
73964	Piston, RL4R01A/RE4R01A Forward Clutch	1	
73965	Piston, RL4R01A/RE4R01A High Clutch	1	
73966	Piston, RL4R01A/RE4R01A Reverse Clutch	1	
73967	Piston, RL4R01A/RE4R01A Low/Reverse Clutch	1	
73967G	Piston, RG4R01A/JR403E Low/Reverse Clutch (.710” Thick At Edge) 1988-Up	1	
73969	Piston, RL4R01A/RE4R01A Overrun Clutch	1	
73974	Spring, RL4R01A/RE4R01A Forward Clutch Return (4.265”OD)(2.840”ID) 1987-Up	1	
73975	Spring, RL4R01A/RE4R01A High Clutch Return	1	
73976	Spring, RL4R01A/RE4R01A Reverse Clutch Return	1	
73977	Spring, RL4R01A/RE4R01A Low/Reverse Clutch Return	1	
73984	Retainer, RL4R01A/RE4R01A Forward Clutch Spring	1	
73985	Retainer, RL4R01A/RE4R01A High Clutch Spring	1	
73986	Retainer, RL4R01A/RE4R01A Reverse Clutch Spring	1	
73987	Retainer, RL4R01A/RE4R01A Low/Reverse Clutch Spring	1	
73991	Linkage, RL4R01A/RE4R01A Internal	1	
73991G	Linkage, RG4R01A/JR403E Internal	1	
73992	Shift Lever, RL4R01A/RE4R01A (Outside) Goes Through Case	1	
73992P	Pin, RL4R01A/RE4R01A Holds Shift Lever In Case	1	
73995	Park Pawl Assembly, RL4R01A/RE4R01A (.470” Thick Park Pawl) 7 Pieces	1	
73995A	Park Pawl Assemlby, RL4R01A/RE4R01A (.320” Thick Park Pawl) 7 Pieces	1	
73995G	Park Pawl Assembly, RG4R01A (JR403E)	1	
73996	Cooler Line Fitting, RL4R01A/RE4R01A	1	
73998K	Cooler Replacement Kit, RE4R01A	1	21606-15V25

© Whatever It Takes Transmission Parts. Inc.

© Whatever It Takes Transmission Parts. Inc.

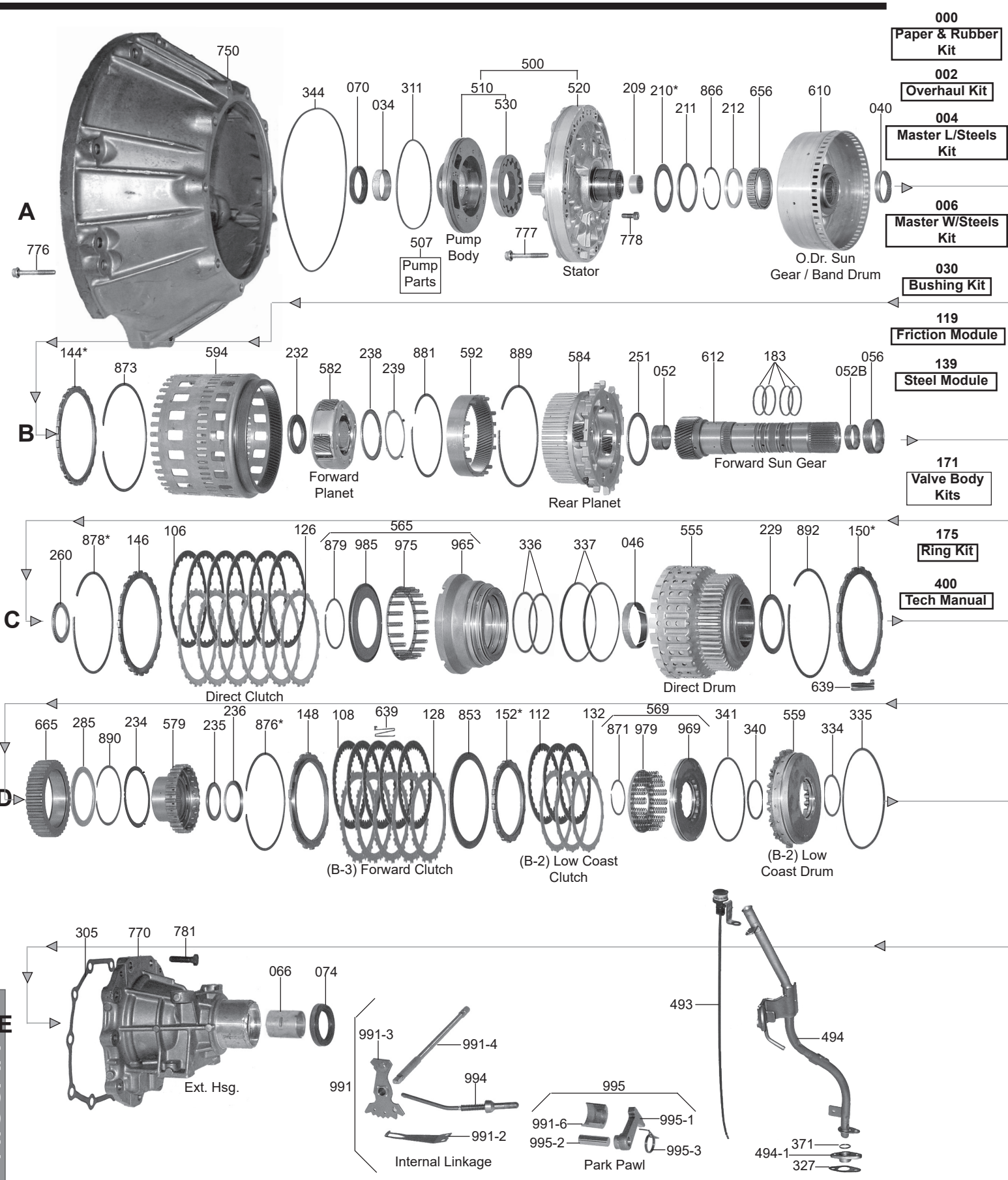

000 Paper & Rubber Kit

002 Overhaul Kit

004 Master L/Steels Kit

006 Master W/Steels Kit

030 Bushing Kit

119 Friction Module

139 Steel Module

171 Valve Body Kits

175 Ring Kit

400 Tech Manual

NISSAN

© Whatever It Takes Transmission Parts. Inc.

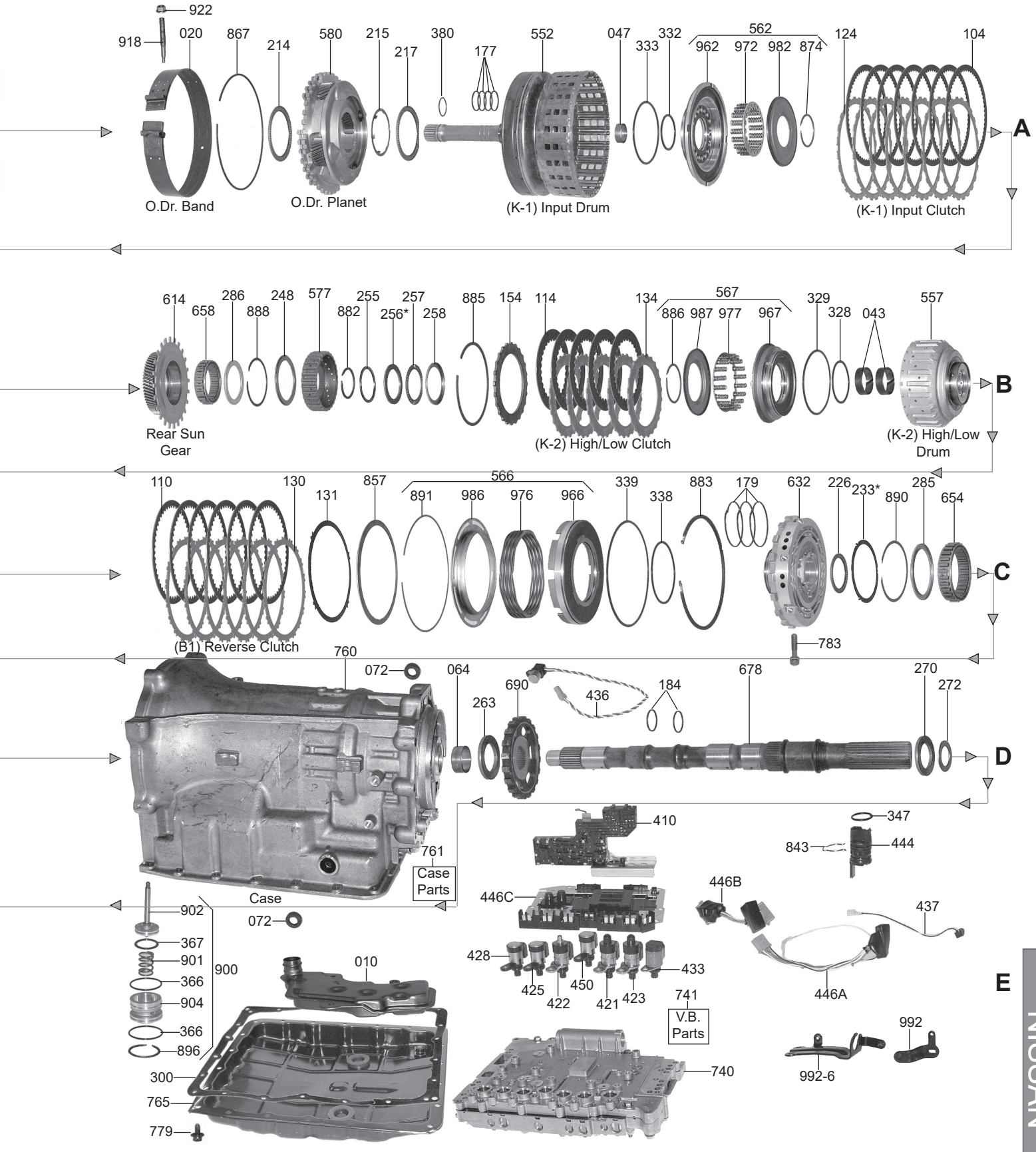

© Whatever It Takes Transmission Parts. Inc.

PART #	PAPER & RUBBER KIT	QTY	REFERENCE #
173000A	Paper & Rubber Kit, RE5R05A (5 Spd RWD) 2002-Up	1	

PART #	OVERHAUL KIT	QTY	REFERENCE #
173002A	Overhaul Kit, RE5R05A (5 Spd RWD) 2002-Up (For Bonded Pistons Sell 173982AK)	1	

PART #	MASTER L/STEELS KIT	QTY	REFERENCE #
173004AF	Master L/Steels Kit, RE5R05A (5 Spd RWD) 2002-Up (All Except V8)(For Bonded Pistons Sell 173982AK)	1	
173004BF	Master L/Steels Kit, RE5R05A (5 Spd RWD) 2002-Up (Armada/Titan/QX56 With V8)(For Bonded Pistons Sell 173982AK)	1	

PART #	MASTER W/STEELS KIT	QTY	REFERENCE #
173006AF	Master W/Steels Kit, RE5R05A (5 Spd RWD) 2002-Up (Fits 350Z, 350ZX, EX35, FX35, FX45, G35, QX56, G37, M35, M35X, M45, NV Van, Some Pathfinders, Frontier, Borrego, Xterra)(For Bonded Pistons Sell 173982AK)	1	
173006BF	Master W/Steels Kit, RE5R05A (5 Spd RWD) 2002-Up (Armada/Titan/Safari/Hyundai Terracan, Kia Sorento)(For Bonded Pistons Sell 173982AK)	1	

PART #	FILTERS	QTY	REFERENCE #
173010A	Filter, RE5R05A (2WD & 4x4) (16 Bolt Holes) With Rectangle Pick-Up 5/16” Tall 2002-Up	1	

PART #	BANDS	QTY	REFERENCE #
173020A	Band, RE5R05A Overdrive (Or Coast)(1 1/4” Wide) (Flex) 2002-Up	1	

PART #	BUSHINGS	QTY	REFERENCE #
173030A	Bushing Kit, RE5R05A 2002-Up	1	
193034A	Bushing, RE5R05A Pump Body (1.925”OD)(1.810”ID) 2002-Up	1	
173040A	Bushing, RE5R05A Overdrive Sun Gear/Overdrive Band Drum 2002-Up	1	
173040AA	Caged Needle Bearing, RE5R05A (Use 173213A)	1	
173213A	Caged Needle Bearing, RE5R05A Overdrive Band Drum (Inner) #040 (Cast # DB540606WA) 2002-Up	1	
173043A	Bushing, RE5R05A High/Low Clutch Drum (.440” Wide)(1.760”ID)(With Dimples)(Fits The Stamped Steel Drum) 2002-Up	2	
173046A	Bushing, RE5R05A Direct Drum (.450” Wide)(2.700”ID)(With Dimples)(For Steel Drums Only) 2002-Up	1	
173047A	Bushing, RE5R05A Input Clutch Drum (Rear) 2002-Up	1	
173052A	Bushing, RE5R05A Forward Sun Gear Shaft (Front)(.545” Wide)(1.240”ID)(With Dimples) 2002-Up	1	
173052AA	Bushing, RE5R05A Forward Sun Gear Shaft (Front)(.545” Wide)(1.275”ID)(With Dimples) 2002-Up	1	
173052B	Bushing, RE5R05A Forward Sun Gear Shaft (Rear)(.390” Wide)(1.355”ID) 2002-Up	1	
173056A	Bushing, RE5R05A Rear Sun Gear (1.948”ID) 2002-Up	1	
173064A	Bushing, RE5R05A Case (1.379”ID) 2002-Up	1	
173066A	Bushing, RE5R05A Extension Housing (2WD) (1.734”ID) (Babbit) 2002-Up	1	

PART #	METAL CLAD SEALS	QTY	REFERENCE #
93070A	Seal, RE5R05A Pump (2.475”OD)(1.808”ID) 2002-Up	1	
173072A	Seal, RE5R05A Shift Lever (.867”OD)(.468”ID) 2002-Up	2	
173074A	Seal, RE5R05A Extension Housing (2WD) (2.450”OD)(1.685”ID) 2002-Up (Use 73074D)	1	
173074B	Seal, RE5R05A Extension Housing (4x4) (2.575”OD)(1.825”ID) 2002-Up	1	
173074C	Seal, RE5R05A (Kia) Extension Housing (4x4) (2.450”OD)(1.760”ID) 2005-Up	1	
73074D	Seal, RE5R05A 2WD (2.450”OD)(1.685”ID) 2002-Up	1	

PART #	FRICTION CLUTCH	QTY	REFERENCE #
173104A	Friction, RE5R05A Input Clutch (.071”) 60 Teeth (6 3/8”OD) 2002-Up (High Energy Eclipse)	6-7	
173106A	Friction, RE5R05A Direct Clutch (.071”) 24 Teeth (6 1/4”OD) 2002-Up (High Energy Eclipse)	5-6	
173108A	Friction, RE5R05A Forward Clutch (.061”) 39 Teeth (5.784”OD) 2002-Up	5	
173110A	Friction, RE5R05A Reverse Clutch (.069”) 50 Teeth (6 5/8”OD) 2002-Up	6	
173110B	Friction, RE5R05A Reverse Clutch (.063”) 40 Teeth (6 5/8”OD) 2002-Up	5-7	

© Whatever It Takes Transmission Parts. Inc.

173112A	Friction, RE5R05A Low Coast Clutch (.063”) 30 Teeth (5.216”OD) 2002-Up (High Energy Eclipse)	3-4	
173114A	Friction, RE5R05A High-Low Clutch (0.63”) 30 Teeth (4.915”OD) 2002-Up (High Energy Eclipse)	4-5	
173119A	Friction Module, RE5R05A (5 Speed RWD) 2002-Up	1	
117119AS1	Friction Module, RE5R05A (Stage 1) 2002-Up (Except V8)	1	
173119B	Friction Module, RE5R05A (5 Speed) 2002-Up (Armada/Titan/QX56 V8)	1	
173119BS1	Friction Module, RE5R05A (Stage 1) 2002-Up (Armada/Titan/QX56 V8)	1	

PART #	STEEL CLUTCH	QTY	REFERENCE #
173124A	Steel, RE5R05A Input Clutch (.079”) 24 Teeth (5.673”ID) 2002-Up	6-7	
173124B	Steel, RE5R05A Input Clutch (.079”)(18 Teeth)(5.673”ID) 2002-Up	6-7	
173126A	Steel, RE5R05A Direct Clutch (.094”) 24 Teeth (5.539”ID) 2002-Up	5-6	
173128A	Steel, RE5R05A Forward Clutch (.079”) 18 Teeth (4.895”ID) 2002-Up	5	
173128AA	Steel, RE5R05A Forward Clutch .063” (16 Teeth)(4.882”ID) 2002-Up	5	
173130A	Steel, RE5R05A Reverse Clutch (.079”) 18 Teeth (5 15/16”ID) 2002-Up	5-6	
173130AA	Steel, RE5R05A Reverse Clutch (.063”) 18 Teeth (5.945”ID) 2002-Up	7	
173131AA	Steel, RE5R05A Reverse Clutch (Dished)(.047”)(4 Teeth)(5.945”ID) 2002-Up	1	
173132A	Steel, RE5R05A Low Coast Clutch (.079”) 18 Teeth (4.442”ID)(Teeth Are .535”Wide & Flat) 2002-Up	3	
173132AA	Steel, RE5R05A Low Coast Clutch (.071”) 15 Teeth (4.442”ID)(Teeth Are .385” Wide With 2 Points On Each Tooth) 2002-Up	2-3	
173132AB	Steel, RE5R05A Low Coast Clutch (.063”) 16 Teeth (4.442”ID)(Teeth Are .352” Wide & Flat) 2002-Up	1	
173132AC	Steel, RE5R05A Low Coast Clutch (.064”) 18 Teeth (4.442”ID)(Teeth Are .352” Wide & Flat) 2002-Up	1	
173134A	Steel, RE5R05A High-Low Clutch (.094”) 24 Teeth (3.735”ID) 2002-Up	5	
173139A	Steel Module, RE5R05A (5 Speed RWD) 2002-Up	1	
173139AA	Steel Module, RE5R05A (5 Spd RWD) 2002-Up (Fits 350Z, 350, EX35, FX35, FX45, G35, QX56, G37, M35, M35X, NV Van, Pathfinder, Frontier, Borrego, Xterra)	1	

PART #	PRESSURE PLATES	QTY	REFERENCE #
173144	Pressure Plate, RE5R05A Input Clutch (.156”) 24 Teeth (5.682”ID) 2002-Up	1	
173144A	Pressure Plate, RE5R05A Input Clutch (.164”) 24 Teeth (5.682”ID) 2002-Up	1	
173144AA	Pressure Plate, RE5R05A Input Clutch (.172”) 24 Teeth (5.682”ID) 2002-Up	1	
173144AB	Pressure Plate, RE5R05A Input Clutch (.180”) 24 Teeth (5.682”ID) 2002-Up	1	
173146A	Pressure Plate, RE5R05A Direct Clutch (.154”) 24 Teeth (5.539”ID) 2002-Up	1	
173148A	Pressure Plate, RE5R05A Forward Clutch (.133”) 18 Teeth (4.895”ID) 2002-Up	1	
173148AB	Pressure Plate, RE5R05A Forward Clutch (.146”) 18 Teeth (4.895”ID) 2202-Up	1	
173148AD	Pressure Plate, RE5R05A Forward Clutch (.165”) 18 Teeth (4.895”ID) 2002-Up	1	
173148AE	Pressure Plate, RE5R05A Forward Clutch (.173”) 18 Teeth (4.895”ID) 2002-Up	1	
173148BD	Pressure Plate, RE5R05A Forward Clutch (.165”) 16 Teeth (4.895”ID) 2002-Up	1	
173148BE	Pressure Plate, RE5R05A Forward Clutch (.173”) 16 Teeth (4.895”ID) 2002-Up	1	
173150AA	Pressure Plate, RE5R05A Reverse Clutch (.165”) 18 Teeth (5 15/16”ID) 2002-Up	1	
173150AB	Pressure Plate, RE5R05A Reverse Clutch (.173”) 18 Teeth (5 15/16”ID) 2002-Up	1	
173150AC	Pressure Plate, RE5R05A Reverse Clutch (.181”) 18 Teeth (5 15/16”ID) 2002-Up	1	
173150AD	Pressure Plate, RE5R05A Reverse Clutch (.189”) 18 Teeth (5 15/16”ID) 2002-Up	1	
173150AE	Pressure Plate, RE5R05A Reverse Clutch (.197”) 18 Teeth (5 15/16”ID) 2002-Up	1	
173150AF	Pressure Plate, RE5R05A Reverse Clutch (.205”) 18 Teeth (5 15/16”ID) 2002-Up	1	
173152A	Pressure Plate, RE5R05A Low Coast Clutch (.164”) 18 Teeth (4.442”ID)(Teeth Are .535” Wide) 2002-Up	1	
173152AA	Pressure Plate, RE5R05A Low Coast Clutch (.172”) 18 Teeth (4.442”ID)(Teeth Are .535” Wide) 2002-Up	1	
173152BF	Pressure Plate, RE5R05A Low Coast Clutch (.210”) 18 Teeth (4.442”ID)(Teeth Are .385” Wide) 2002-Up	1	
173152BH	Pressure Plate, RE5R05A Low Coast Clutch (.227”) 18 Teeth (4.442”ID)(Teeth Are .385” Wide) 2002-Up	1	
173152C	Pressure Plate, RE5R05A Low Coast Clutch (.142”) 15 Teeth (4.442”ID)(Teeth Are .375” Wide) 2002-Up	1	
173154A	Pressure Plate, RE5R05A High-Low Clutch (.163”) 24 Teeth (3.727”ID)(Teeth Are .210” Wide) (Fits The Aluminum Drum) 2002-Up	1	
173154AA	Pressure Plate, RE5R05A High-Low Clutch (.172”)(24 Teeth)(3.740”ID)(Teeth Are .210” Wide) (Fits Are Aluminum Drum) 2002-Up	1	
173154B	Pressure Plate, RE5R05A High-Low Clutch (.156”)(24 Teeth)(3.740”ID)(Teeth Are .335” Wide) (Fits The Stamped Steel Drum) 2002-Up	1	
173154BA	Pressure Plate, RE5R05A High-Low Clutch (.164”)(24 Teeth)(3.740”ID)(Teeth Are .335” Wide) (Fits The Stamped Steel Drum) 2002-Up	1	

© Whatever It Takes Transmission Parts. Inc.

PART #	PRESSURE PLATES (Continued)	QTY	REFERENCE #
173154BB	Pressure Plate, RE5R05A High-Low Clutch (.171")(24 Teeth)(3.740"ID)(Teeth Are .335" Wide) (Fits The Stamped Steel Drum) 2002-Up	1	

PART #	VALVE BODY KITS	QTY	REFERENCE #
A173165A	Valve Body Kit, RE5R05A/RE5R01A (Complete Ungrade Package) 2004-Up (Superior)	1	
T173171A	Shift Kit, RE5R05A (High-Performance & Heavy Duty) 2002-Up (Transgo)	1	

PART #	SEALING RINGS	QTY	REFERENCE #
173175AT	Ring Kit, RE5R05A (Teflon) 2002-Up	1	
173177AT	Use 22177AT	4	
22177AT	Ring, RE5R05A Input Shaft (1.175"OD)(Teflon)	4	
173179AT	Ring, RE5R05A Reverse Clutch (2.928"OD) Teflon (Lap Joint) 2002-Up	3	
173183AT	Ring, RE5R05A Forward Sun Gear Shaft (1.745"OD) Teflon (Lap Joint) 2002-Up	4	
173184AT	Ring, RE5R05A Output Shaft To Forward Sun Gear Shaft (1.320"OD) Teflon (Butt Joint) 2002-Up	2	

PART #	WASHERS & BEARINGS	QTY	REFERENCE #
173209A	Caged Needle Bearing, RE5R05A Stator Shaft (Rear)(1.500"OD)(Cast # DB503307 or DB503307A)(Presses Into Stator) 2002-Up	1	
173210AA	Race, RE5R05A Stator (Rear) (.031") 2.875"OD (2.250"ID) 2002-Up	1	
173210AB	Race, RE5R05A Stator (Rear) (.039") 2.875"OD (2.250"ID) 2002-Up	1	
173210AC	Race, RE5R05A Stator (Rear) (.047") 2.875"OD (2.250"ID) 2002-Up	1	
173210AD	Race, RE5R05A Stator (Rear) (.055") 2.875"OD (2.250"ID) 2002-Up	1	
173210AE	Race, RE5R05A Stator (Rear) (.063") 2.875"OD (2.250"ID) 2002-Up	1	
173210AF	Race, RE5R05A Stator (Rear) (.071") 2.875"OD (2.250"ID) 2002-Up	1	
173210BA	Race, RE5R05A Stator (Rear) (.031") 3.150"OD (2.250"ID) 2002-Up	1	
173210BB	Race, RE5R05A Stator (Rear) (.039") 3.150"OD (2.250"ID) 2002-Up	1	
173210BC	Race, RE5R05A Stator (Rear) (.047") 3.150"OD (2.250"ID) 2002-Up	1	
173210BD	Race, RE5R05A Stator (Rear) (.055") 3.150"OD (2.250"ID) 2002-Up	1	
173210BE	Race, RE5R05A Stator (Rear) (.063") 3.150"OD (2.250"ID) 2002-Up	1	
173210BF	Race, RE5R05A Stator (Rear) (.071") 3.150"OD (2.250"ID) 2002-Up	1	
173211A	Bearing W/Race, RE5R05A Stator (Rear) (.113" Thick) 2.946"OD (2.368"ID) 2002-Up	1	
173211B	Bearing W/Race, RE5R05A Stator (Rear) (.113" Thick) 3.145"OD (2.520"ID) 2002-Up	1	
173212A	End Cap Washer, RE5R05A 3rd Sprag (Brass) 2.325"OD (1.835"ID) 2002-Up	1	
173212B	End Cap Washer, RE5R05A 3rd Sprag (Brass)(2.485"OD)(1.990"ID) 2002-Up	1	
173213A	Caged Needle Bearing, RE5R05A Overdrive Band Drum (Inner) #040 (Cast # DB504606WA) 2002-Up	1	
173214A	Bearing W/Race, RE5R05A Overdrive Sun Gear To Overdrive Planet (.145" Thick)(2.945"OD) (2.210"ID) 2002-Up	1	
173214B	Bearing W/Races, RE5R05A Overdrive Sun Gear To Overdrive Planet (.145" Thick)(3.025"OD) (2.290"ID) 2002-Up	1	
173215A	Race, RE5R05A Overdrive Planet To Input Drum (With 3 Inner Tabs) (.030" Thick) 2.813"OD (2.500"ID) 2002-Up	1	
173215B	Race, RE5R05A Overdrive Planet To Input Drum (With 6 Inner Tabs)(.030" Thick)(2.890"OD) (2.540"ID) 2002-Up	1	
173215C	Race, RE5R05A Overdrive Planet To Input Drum (No Inner Tabs)(.032" Thick)(2.880"OD) (2.376"ID) 2002-Up	1	
173217A	Bearing W/Race, RE5R05A Overdrive Planet To Input Drum (.110" Thick) 2.948"OD (2.325"ID) 2002-Up	1	
173217B	Bearing W/Races. RE5R05A Overdrive Planet To Input Drum (.110" Thick)(3.035"OD)(2.405"ID) 2002-Up	1	
173226A	Bearing W/Race, RE5R05A Center Support To Low Coast Clutch Hub (.125" Thick) 2.355"OD (1.787"ID) 2002-Up (Also Fits RE5R05A Low Coast Clutch Hub To Case #235 2002-Up) (Also Fits RE5R05A Output Shaft To Extension Housing #272 2002-Up)	1-3	
173229A	Bearing W/Race, RE5R05A Direct Clutch Drum To Center Support (.109" Thick) 3.615"OD (2.935"ID) 2002-Up	1	
173232A	Bearing W/Race, RE5R05A Input Drum To Forward Planet (.110" Thick) 1.842"OD (1.145"ID) 2002-Up	1	
173233A	Use 173234A	1	
173234A	Washer, RE5R05A Rear Sprag Outer Race To Low Coast Clutch Hub (With 3 Outer Tabs) (.039" Thick) 4.250"OD (3.618"ID) 2002-Up (Also Fits Some RE5R05A Center Support To Rear Sprag Outer Race)	1-2	
173234AA	Washer, RE5R05A Rear Sprag Outer Race To Low Coast Clutch Hub (With 8 Iner Tabs) (.039" Thick)(4.100"OD)(3.630"ID) 2002-Up	1	
173235A	Use 173226A	1	

© Whatever It Takes Transmission Parts. Inc.

173236A ..... Race, RE5R05A Low Coast Clutch Hub #579 To Case (With Shoulder) 2.258”OD (1.788”ID) ..... 2002-Up ..... 1 .....
173238A ..... Bearing W/Race, RE5R05A Forward Planet To Rear Planet (.118” Thick) 3.295”OD (2.705”ID) ..... 2002-Up ..... 1 .....
173239A ..... Race, RE5R05A Forward Planet To Rear Planet (With 4 Outer Tabs) .023” Thick (3.150”OD) ..... 2.700”ID 2002-Up ..... 1 .....
173248A ..... Bearing W/Races, RE5R05A Rear Sun Gear To High-Low Clutch Hub (.142” Thick) 3.616”OD ..... (2.804”ID) 2002-Up ..... 1 .....
173251A ..... Bearing W/Race, RE5R05A Rear Planet To Rear Sun Gear (.110” Thick) 3.137”OD ..... (2.600”ID) 2002-Up ..... 1 .....
173255B ..... Shim, RE5R05A High-Low Clutch Hub To Race #256 (.087” Thick)(2.363”OD)(1.968”ID) ..... 2002-Up (Use With 173256B Only) ..... 1 .....
173256A ..... Race, RE5R05A High-Low Clutch Hub To High-Low Clutch Drum (Front) (.110” Thick) ..... 2.366”OD (1.752”ID) 2002-Up ..... 1 .....
173256B ..... Race, RE5R05A High-Low Clutch Hub Shim #255 To High-Low Clutch Drum (.103” Thick) ..... (2.366”OD)(1.752”ID) 2002-Up (Use With 173255B) ..... 1 .....
173257A ..... Bearing, RE5R05A High-Low Clutch Hub To High-Low Clutch Drum (.078” Thick) 2.350”OD ..... (1.756”ID) 2002-Up ..... 1 .....
173258A ..... Race, RE5R05A High-Low Clutch Hub To High-Low Clutch Drum (Rear) With Outer ..... Shoulder (2.438”OD, 1.892”ID) 2002-Up ..... 1 .....
173260A ..... Bearing W/Races, RE5R05A High-Low Clutch Drum To Center Support #632 (.141’ Thick) ..... 2.618”OD (1.916”ID)(No Shoulder) 2002-Up ..... 1 .....
173260B ..... Bearing W/Races, RE5R05A High-Low Clutch Drum To Center Support #632 (.141” Thick) ..... (2.462”OD)(1.830”ID)(With Shoulder) 2002-Up ..... 1 .....
173263A ..... Bearing W/Races, RE5R05A Case To Park Gear (.158” Thick) 2.552”OD (1.858”ID) 2002-Up ..... 1 .....
173270A ..... Race, RE5R05A Output Shaft To Extension Housing (.094” Thick) 2.272”OD (1.460”ID) ..... 2002-Up ..... 1 .....
173272A ..... Use 173226A ..... 1 .....
173285A ..... End Cap Washer, RE5R05A Rear Sprag (Brass) 3.639”OD (2.895”ID) 2002-Up ..... 2 .....
173286A ..... End Cap Washer, RE5R05A 1st One Way Clutch (Brass) 2.600”OD (1.945”ID) 2002-Up ..... 1 .....

PART #	GASKETS & RUBBER COMPONENTS	QTY	REFERENCE #

173300A ..... Gasket, RE5R05A Pan (Except Kia Sorento) 2002-Up ..... 1 .....
173300AF ..... Gasket, RE5R05A Pan (Except Kia Sorento) 2002-Up (Farpak) ..... 1 .....
173300BF ..... Gasket, RE5R05A Pan (Kia Sorento) 2005-Up (Farpak)(Also Fits Hyundai Terracan 2005-08) ..... 1 .....
173305B ..... Gasket, RE5R05A (Nissan) Case To Extension Housing (10 Bolt Holes) 2002-Up ..... 1 .....
173305BA ..... Gasket, RE5R05A (Kia) Case To Extension Housing (10 Bolt Holes) 2002-Up ..... 1 .....
183311A ..... O-Ring, RE5R05A Pump Body To Stator 2002-Up ..... 1 .....
173344A ..... Use 142311A ..... 1 .....
142311A ..... O-Ring, RE5R05A Pump Stator To Case #344 2002-Up ..... 1 .....

PART #	TECHNICAL MANUALS	QTY	REFERENCE #

173400A ..... Technical Manual, RE5R05A ..... 1 .....
173400AA ..... Guide, RE5R05A Technicians Diagnostic (ATSG) ..... 1 .....

PART #	ELECTRICAL COMPONENTS	QTY	REFERENCE #

173410A ..... Switch, RE5R05A PRNDL (With 1 Ten Prong And 1 Three Prong Connector) ..... (Cast # PPS-GF40) 2002-Up ..... 1 .....
173421A ..... Solenoid, RE5R05A Input Clutch (Cast # 0 260 130 030) 2002-Up (Also Fits RE5R05A Direct ..... Clutch #422, And High/Low Reverse Clutch #423 2002-Up)(Has A Plastic Snout On Opposite ..... End Of O-Ring) ..... 1-3 .....
173422A ..... Use 173421A ..... 1 .....
173423A ..... Use 173421A ..... 1 .....
173425A ..... Use 173428A ..... 1 .....
173428A ..... Solenoid, RE5R05A Line Pressure (Cast # 0 260 130 031) 2002-Up (Also Fits RE5R05A ..... TCC #425 And Front Brake Clutch #450 2002-Up)(Is Flat On Opposite End Of O-Ring) ..... 1-3 .....

173433A ..... Solenoid, RE5R05A Low Coast Brake Clutch (Cast # 0 260 120 042) 2002-Up (Is Flat On ..... Opposite End Of O-Ring)(High OHM, 20-40 OHMS)(Fits Nissan 2002-Up, And Infinity ..... 8/1/05-Up) ..... 1 .....
173433AA ..... Solenoid, RE5R05A Low Coast Brake Clutch (Low OHM, 10-15 OHMS)(Fits Infinity ..... 2002-8/1/05) ..... 1 .....
173436A ..... Sensor, RE5R05A VSS (Output Speed Sensor) (Cast # RS-609) (3 Pin Connector) 2002-Up ..... 1 .....
173437A ..... Sensor, RE5R05A Temperature (With 2 Prong Connector) 2002-Up ..... 1 .....
173444A ..... Connector, RE5R05A Case (10 Prong) 2002-Up ..... 1 .....
173446A ..... Wire Harness, RE5R05A Internal (With 10 Prongs For The Case Connector) (With 1 Ten ..... Prong Circuit Board Connector & 2 Two Prong Connectors) 2002-Up ..... 1 .....

© Whatever It Takes Transmission Parts. Inc.

PART #	ELECTRICAL COMPONENTS (Continued)	QTY	REFERENCE #
173446B	Wire Harness, RE5R05A Internal (With 2 Nine Wire Connectors) (Connects PRNDL Switch To The Circuit Board) 2002-Up	1	
173446C	Wire Harness, RE5R05A Internal (Black Plastic Circuit Board) With 1 Ten, 1 Nine & 1 Two Prong Connectors (With 7 Solenoid Connectors) Cast # 0260 550 002 On Solenoid Side (This Is The TCM Also) 2002-Up	1	
173450A	Use 173428A	1	

PART #	HARD PARTS	QTY	REFERENCE #
173500A	Pump (Complete) RE5R05A (Cast Iron Body With 13 Lug Inner Gear) (Aluminum Stator With Bearing #209 Inside Rear Of Shaft) 2002-Up	1	
173510A	Pump Body W/Gears, RE5R05A (Cast Iron) (13 Lug Inner Gear, With Mill Flats) 2002-Up	1	
173520A	Stator, RE5R05A Pump (Aluminum) With Bearing #209 Inside Rear Of Shaft (1.830"OD Where Sprag # 646 Rides)(6 1/4" Long Stator Tube) 2002-Up	1	
173520AA	Stator, RE5R05A Pump (Aluminum) With Bearing #209 Inside Rear Of Shaft (1.830"OD Where Sprag #646 Rides)(5 7/8" Long Stator Tube) 2002-Up	1	
173520B	Stator, RE5R05A Pump (Aluminum) With Bearing # 209 Inside Rear Of Shaft (1.995"OD Where Sprag # 646 Rides)(6 1/4" Long Stator Tube) 2002-Up	1	
173520BA	Stator, RE5R05A Pump (Aluminum) With Bearing #209 Inside Rear Of Shaft (1.995"OD Where Sprag # 646 Rides)(5 7/8" Long Stator Tube) 2002-Up	1	

PART #	PUMP COMPONENTS	QTY	REFERENCE #
173530A	Pump Gear Set, RE5R05A (13 Lug Inner Gear, With Mill Flats) (.500" Thick) 2002-Up	1	

PART #	HARD PARTS (Continued)	QTY	REFERENCE #
173552A	Drum W/Shaft, RE5R05A Input Clutch (With 106 Teeth Ring Gear) (With 24 Spline Shaft, 8 1/4" Long) 2002-Up	1	
173552AA	Drum W/Shaft, RE5R05A Input Clutch (With 106 Teeth Ring Gear)(With 24 Spline Shaft, 7 3/8" Long)(Uses A Bearing #217 With 3.035"OD) 2002-Up	1	
173552AB	Drum W/Shaft,RE5R05A Input Clutch (With 106 Teeth Ring Gear)(With 24 Spline Shaft, 7 3/8" Long)(Uses A Bearing #217 With 2.948"OD) 2002-Up	1	
173552B	Drum W/Shaft, RE5R05A Input Clutch (With 102 Teeth Ring Gear)(With 24 Spline Shaft)(8 1/4" Long) 2002-Up	1	
173552BA	Drum W/Shaft, RE5R05A Input Clutch (With 102 Teeth, 2 Groove Ring Gear)(With 24 Spline Shaft, 7 3/8" Long) 2002-Up	1	
173552BB	Drum W/Shaft, RE5R05A Input Clutch (With 102 Teeth, 1 Groove Ring Gear)(With 24 Spline Shaft, 7 3/8" Long) 2002-Up	1	
173555A	Drum, RE5R05A Direct Clutch (Aluminum With 50 Teeth Reverse Clutch Hub) 2002-Up	1	
173555B	Drum, RE5R05A Direct Clutch (Steel With 40 Teeth Reverse Clutch Hub) 2002-Up	1	
173557A	Drum, RE5R05A High-Low Clutch (Aluminum) (3.140" Tall With Steel Race On Back Of Drum) 2002-Up	1	
173557AA	Drum, RE5R05A High-Low Clutch (Stamped Steel)(3.140" Tall With Steel Race On Back Of Drum) 2002-Up	1	
173557AB	Drum, RE5R05A High-Low Clutch (Aluminum)(2.660" Tall Has No Steel Race On Back Of Drum) 2002-Up	1	
173559A	Drum/Piston, RE5R05A Low Coast Clutch (Aluminum) 3 Clutch (Cast # 31575-90X01) 2002-Up (This Is Also The Piston For Forward Clutch)	1	
173559AA	Drum/Piston, RE5R05A Low Coast Clutch (Aluminum)(3 Clutch)(Uses 16 Teeth Steels #132) 2002-Up (This Is Also The Piston For The Forward Clutch)	1	
173562A	Piston Kit, RE5R05A Input Clutch (With Aluminum Piston) (1.180" Thick) 2002-Up	1	
173562AA	Piston Kit, RE5R05A Input Clutch (With Aluminum Piston) (1.255" Thick) 2002-Up	1	
173562B	Piston Kit, RE5R05A Input Clutch (With Aluminum Piston) (1.970" Thick) 2002-Up	1	
173565A	Piston Kit, RE5R05A Direct Clutch (With Aluminum Piston)(Cast # 11605-55201) 2002-Up	1	
173565AA	Piston Kit, RE5R05A Direct Clutch (With Aluminum Piston)(Cast # 11601 55204) 2002-Up	1	
173565AB	Piston Kit, RE5R05A Direct Clutch (With Aluminum Piston)(Cast # 11601 55203) 2002-Up	1	
173566A	Piston Kit, RE5R05A Reverse Clutch (Aluminum Piston)(1" Thick)(6 3/8"OD)(Uses A Lathe Cut O-Ring) 2002-Up	1	
173566AB	Piston Kit, RE5R05A Reverse Clutch (Aluminum Piston)(1" Thick)(6 3/8"OD)(Uses A Lip Seal) 2002-Up	1	
173567A	Piston Kit, RE5R05A High-Low Clutch (Aluminum Piston)(1.050" Thick)(4.880"OD) 2002-Up	1	
173567AA	Piston Kit, RE5R05A High-Low Clutch (Aluminum Piston)(1.225" Thick)(4.880"OD) 2002-Up	1	
173569A	Piston Kit, RE5R05A Low Coast Clutch (Aluminum Piston) (5.163"OD) 2002-Up	1	
173577A	Hub, RE5R05A High-Low Clutch (1" Thick) 30 Teeth (46 Internal Splines) 2002-Up	1	
173579A	Clutch Hub, RE5R05A Low Coast Clutch With Inner Race (With 30 Teeth Clutch Hub) (1.590" Thick) 2002-Up	1	

© Whatever It Takes Transmission Parts. Inc.

173579AA.....Clutch HUb, RE5R05A Low Coast Clutch With Inner Race (With 30 Teeth Clutch Hub)
.....(1.890” Thick) 2002-Up .....1 .....
173580A .....Planet, RE5R05A Overdrive (Aluminum) 4 Gear (Uses A 50 Teeth Sun Gear #610)
.....(28 Teeth Pinion Gears) 2002-Up .....1 .....
173580B .....Planet, RE5R05A Overdrive (Aluminum) 4 Gear (Uses A 54 Teeth Sun Gear #610)
.....(24 Teeth Pinion Gears) 2002-Up .....1 .....
173580BA.....Planet, RE5R05A Overdrive (Cast Iron) 5 Gear (Uses A 53 Teeth Sun Gear #610)
.....(25 Teeth Pinion Gears) 2002-Up .....1 .....
173582A .....Planet, RE5R05A Forward (4 Gear) (Steel) (Uses A 42 Teeth Sun Gear #612) (With 30
.....Internal Splines) 2002-Up .....1 .....
173582B .....Planet, RE5R05A Forward (4 Gear Steel)(Uses A 43 Teeth Sun Gear #612)(With 32 Internal
.....Splines) 2002-Up .....1 .....
173582BA.....Planet, RE5R05A Forward (5 Gear Steel)(Uses A 43 Tooth Sun Gear #612)(With 32 Internal
.....Splines) 2002-Up .....1 .....
173584A .....Planet, RE5R05A Rear (4 Gear) Aluminum (Uses A 110 Teeth Ring Gear #594)(Uses A 62 Teeth
.....Sun Gear #614) 2002-Up.....1 .....
173584AA.....Planet, RE5R05A Rear (4 Gear)(Cast Iron)(Uses A 110 Teeth Ring Gear #594)(Uses A 62 Teeth
.....Sun Gear #614) 2002-Up.....1 .....
173584B .....Planet, RE5R05A Rear (5 Gear)(Cast Iron)(Uses A 99 Teeth Sun Gear #594)(Uses A 61 Teeth
.....Sun Gear #614) 2002-Up (This Planet Comes With The Forward Planet Ring Gear #592).....1 .....
173584BA.....Planet, RE5R05A Rear (4 Gear)(Aluminum)(Uses A 98 Teeth Ring Gear #594)(Uses A 62 Teeth
.....Sun Gear #614) 2002-Up.....1 .....
173592A .....Ring Gear, RE5R05A Forward Planet (78 Teeth) (With 16 Rear Lugs) 2002-Up.....1 .....
173594A .....Ring Gear, RE5R05A Rear Planet With Connecting Shell (With 110 Teeth Ring Gear)2002-Up....1 .....
173594B .....Ring Gear, RE5R05A Rear Planet With Connecting Shell (With 99 Teeth Ring Gear) 2002-Up ....1 .....
173594BA.....Ring Gear, RE5R05A Rear Planet With Connecting Shell (With 98 Teeth Ring Gear) 2002-Up ....1 .....
173610A .....Sun Gear/Drum, RE5R05A Overdrive Band (7 9/16”OD) (With 50 Teeth Sun Gear)(Uses A
.....Bushing #040) 2002-Up .....1 .....
173610B .....Sun Gear/Drum, RE5R05A Overdrive Band (7 9/16”OD)(With 54 Teeth Sun Gear)(Uses A
.....Bearing #040) 2002-Up.....1 .....
173610BA.....Sun Gear/Drum, RE5R05A Overdrive Band (7 9/16”OD) (With 53 Teeth Sun Gear)(Uses A
.....Bearing #040) 2002-Up.....1 .....
173610C .....Sun Gear/Drum, RE5R05A Overdrive Band (7 9/16”OD)(With 50 Teeth Sun Gear)(Uses A
.....Bearing #040) 2005-Up.....1 .....
173612A .....Sun Gear W/Shaft, RE5R05A Forward Planet (42 Teeth)(9 1/4” Long) 2002-Up .....1 .....
173612AA.....Sun Gear W/Shaft, RE5R05A Forward Planet (42 Teeth)(9 1/2” Long) 2002-Up .....1 .....
173612B .....Sun Gear W/Shaft, RE5R05A Forward Planet (43 Teeth)(9 1/2” Long) 2002-Up .....1 .....
173614A .....Sun Gear, RE5R05A Rear Planet (62 Teeth)(3.410”OD Gear)(With Outer Sprag Race) 2002-Up.1 .....
173614B .....Sun Gear, RE5R05A Rear Planet (61 Teeth)(3.700”OD Gear)(With Outer Sprag Race) 2002-Up.1 .....
173614BA.....Sun Gear, RE5R05A Rear Planet (62 Teeth)(3.805”OD Gear)(With Outer Sprag Race) 2002-Up.1 .....
173632A .....Center Support, RE5R05A (Reverse Clutch Piston Housing) Aluminum With A 3 Sealing Ring,
.....2.535” Tall Tower (With 4 Ball Plugs Under Where #226 Bearing Rides) 2002-Up.....1 .....
173632AA.....Center Support, RE5R05A (Reverse Clutch Piston Housing) Aluminum, With A 3 Sealing Ring,
.....3.200” Tall Ring Tower (With 5 Ball Plugs Under Where #226 Rides)(Uses A 3 Tab Washer #233)
.....2002-Up .....1 .....
173632AA-1....Center Support, RE5R05A (Reverse Clutch Piston Housing) Aluminum, With A 3 Sealing Ring,
.....3.200” Tall Ring Tower (With 5 Ball Plugs Under Where #226 Bearing Rides)(Does Not Use A
.....3 Tab Washer #233) 2002-Up .....1 .....
173632AB.....Center Support, RE5R05A (Reverse Clutch Piston Housing)(Aluminum With A 3 Ring, 3.200”Tall
.....Ring Tower)(With 4 Ball Plugs Where #226 Bearing Rides) 2002-Up .....1 .....

PART #	SPRAGS & ONE WAY CLUTCHES	QTY	REFERENCE #

173639A .....Anti Rattle Clip, RE5R05A Reverse Clutch (Z Shaped)(.175” Thick)(1.160” Long)(.620” Wide)
.....2003-Up .....1 .....
173654A .....Sprag, RE5R05A Rear (28 Lug, Metal Cage)(.555” Wide) 2002-Up.....1 .....
173654AA.....Sprag, RE5R05A Rear (28 Lugs, Metal Cage)(.835” Wide) 2002-Up.....1 .....
173656A .....Sprag, RE5R05A 3rd (26 Lug)(Metal Cage) 2002-Up.....1 .....
173656B .....Sprag, RE5R05A 3rd (28 Lug)(Metal Cage) 2002-Up.....1 .....
173658A .....Sprag, RE5R05A 1st One Way Clutch (22 Lug)(Metal Cage)(Cage Is .680” Thick) 2002-Up .....1 .....
173658AA.....Sprag, RE5R05A 1st One Way Clutch (22 Lug)(Metal Cage)(Cage Is .755” Thick) 2002-Up .....1 .....
173665A .....Outer Race, RE5R05A Rear Sprag (With 39 Teeth Clutch Hub)(.853”Wide) 2002-Up.....1 .....
173665AA.....Outer Race, RE5R05A Rear Sprag (With 39 Teeth Clutch Hub)(1.130” Wide) 2002-Up.....1 .....

PART #	HARD PARTS (Continued)	QTY	REFERENCE #

173678A .....Output Shaft, RE5R05A 2WD (20” Long)(6 1/8” From Front Of Shaft To Front Sealing Ring
.....Groove) 2002-Up .....1 .....
173678AA.....Output Shaft, RE5R05A (2WD/4x4) (20” Long)(5 9/16” From Front Of Shaft To Front Sealing
.....Ring Groove) 2002-Up.....1 .....

© Whatever It Takes Transmission Parts. Inc.

PART #	HARD PARTS (Continued)	QTY	REFERENCE #
173678B	Output Shaft, RE5R05A 4x4 (17 3/4” Long)(6 1/8” From Front Of Shaft To Front Of Sealing Ring Groove) 2002-Up	1	
173678C	Output Shaft, RE5R05A (Kia 4x4)(18 3/8” Long) 2005-Up	1	
173690A	Parking Gear, RE5R05A (5 1/16”OD) 20 Lugs (36 Internal Splines) 2002-Up	1	
173690C	Parking Gear, RE5R05A (Kia)(5 1/16”OD)(18 Lugs)(36 Internal Splines) 2005-Up	1	
173740A	Valve Body, RE5R05A (1st Design With 7 Solenoids)(With Two N/R Accumulators)(Has No Pressure Control Valve)(Does Not Come With TCM #446C Or Neutral Safety Switch # 410) 2002-Up	1	
173740AA	Valve Body, RE5R05A (2nd Design With 7 Solenoids)(With Two N/R Accumulators)(Has A Pressure Control Valve)(Does Not Come With TCM #446C Or Neutral Safety Switch # 410) 2002-Up	1	
173740AB	Valve Body, RE5R05A (3rd Design With 7 Solenoids)(With One Large N/R Accumulators)(Has A Pressure Control Valve)(Does Not Come With TCM #446C Or Neutral Safety Switch # 410) 2002-Up	1	

PART #	VALVE BODY COMPONENTS	QTY	REFERENCE #
A173741B-2K	Valve Kit, RE5R05A Cooler Relief (.315”OD Valve)(Contains: Valve, Spring, And Retainer Clip)(With Drill Bit And Gauge) 2002-Up (Superior)	1	
A173741B-3K	Valve Kit, RE5R05A Cooler Relief (.295”OD Valve)(Contains: Valve, Spring, And Retainer Clip)(With Drill Bit And Gauge) 2002-Up (Superior)	1	
S173741BCK	Cooler By-Pass Valve Assembly, RE5R05A (Contains: Valve & Spring)(Sonnax)(Must Use Tool # T-F-63741-TL7 & T-VB-Fix)	1	
T-F-63741-TL7	Tool For S173741BCK	1	
T-VB-FIX	Valve Body Reaming Fixture (Sonnax)	1	
S173741CAK	TC Regulator Valve Assembly, RE5R05A (Contains: Valve, Sleeve & Spring)(Sonnax)(Must Use Tool # T-F-63741-TL13 & T-VB-FIX)	1	
T-F-63741-TL13	Tool For S173741CAK & S173741EK & S173741FK	1	
T-VB-FIX	Valve Body Reaming Fixture (Sonnax)	1	
S173741CCK	TCC Control Assembly, RE5R05A (Contains: Plunger Valve & Sleeve)(Sonnax)	1	
S173741EK	Accumulator Control Valve Assembly, RE5R05A (Contains: Valve, Sleeve & 2 Springs)(Sonnax)(Must Use Tool # T-F-63741-TL13 & T-VB-FIX)	1	
S173741FK	A Or B Pilot Valve Assembly, RE5R05A (Contains: Valve, Sleeve & 2 Springs)(Sonnax)(Must Use Tool # T-F-63741-TL13 & T-VB-FIX)	1	
S173741PK	Pressure Regulator Valve & Reverse Boost Valve, RE5R05A (Contains: Pressure Regulator Valve, Reverse Boost Valve, Sleeve & Spring)(Sonnax)(Must Use T-F-63741-TL & T-VB-FIX)	1	
T-F-63741-TL	Tool For S173741PK	1	
S173741RAK	Reverse Boost Valve Assembly, RE5R05A Late Style (Contains: Valve & Sleeve)(Sonnax)	1	
S173741RK	Reverse Boost Valve Assembly, RE5R05A Early Style (Contains: Valve, Sleeve & Spring)(Sonnax)	1	

PART #	HARD PARTS (Continued)	QTY	REFERENCE #
173750A	Bell Housing, RE5R05A (Starter At 8:00) (Top Bolts 3”) (Cast # 97X30 #1 Or #2, RXDVQ40)(13 Holes To Engine) 2002-Up	1	
173750AA	Bell Housing, RE5R05A (Starter At 8:00 & 3:30) (Top Bolts 3”)(Cast #2, VQ2M)(16 Holes To Engine) 2002-Up	1	
173750AB	Bell Housing, RE5R05A (Starter At 3:30) (Top Bolts 3”)(Cast # VQ4W)(15 Holes To Engine) 2002-Up	1	
173750AC	Bell Housing, RE5R05A (Starter At 9:00) (Top Bolts 6 5/16”) 2002-Up	1	
173750AD	Bell Housing, RE5R05A (Starter At 12:00) (Top Bolts 7 1/2”) (Cast #95X30, VH55 #2 Or #1)(13 Holes To Engine) 2002-Up	1	
173750B	Bell Housing, RE5R05A (Starter At 3:30) (Top Bolts 6 5/16”) (Cast # VH4W) 2002-Up	1	
173750C	Bell Housing, RE5R05A (Kia)(Starter At 8:00)(Top Bolts 3 1/2”)(12 Holes To Engine) 2005-Up	1	
173760A	Case, RE5R05A (2WD)(Smooth On Top)(Cast # MCO #1, #2, #3)(Linkage On Passenger Side)(Dipstick In Case) 2002-Up	1	
173760AA	Case, RE5R05A (4x4 With 2 Ribs On Top)(Cast # MCO 6-1)(Linkage On Passenger Side)(Dip Stick In Case) 2002-Up	1	
173760B	Case, RE5R05A (Cast #RXO 4W #1 On Top) 2002-Up	1	
173760BA	Case, RE5R05A (2WD)(Smooth On Top)(Cast # RXO 2W #5)(Linkage On Drivers Side)(Dipstick In Case) 2002-Up	1	
173760BB	Case, RE5R05A (4x4)(With 2 Ribs On Back)(Cast # Ik #1-4)(Linkage On Drivers Side)(Dipstick In Case) 2002-Up	1	
173760C	Case, RE5R05A (Kia)(4x4)(With 2 RIbs On Top)(Linkage On Passengers Side)(Dipstick Is In The Pan) 2005-Up	1	
173765A	Pan, RE5R05A (2WD & 4x4) 22 Bolt Holes (1 5/8” Deep In The Middle)(No Filler Tube In Pan) 2002-Up	1	

© Whatever It Takes Transmission Parts. Inc.

173765C.....Pan, RE5R05A (Kia)(With 11" Dipstick Tube In Pan) 2005-Up .....1 .....
173770A.....Extension Housing, RE5R05A 2WD (7 7/8" Long)(With 4 Threaded Mounting Bosses)(Uses
.....A 2.440"OD Rear Seal)(Cast # 97X00) 2002-Up .....1 .....
173770AB.....Extension Housing, RE5R05A 2WD (7 7/8" Long)(With 4 Threaded Mounting Bosses)(Uses
.....A 2.440"OD Rear Seal)(Cast # RXO) 2002-Up.....1 .....
173770B .....Extension Housing, RE5R05A 4x4 (6 1/2" Long)(14 Bolts To Transfer Case) 2002-Up .....1 .....
173770BA.....Extension Housing, RE5R05A 4x4 (8 3/4" Long)(10 Bolts To Transfer Case) 2002-Up .....1 .....
173770C.....Extension Housing, RE5R05A (Kia) 4x4 (6 1/16" Long)(8 Bolts To Transfer Case) 2005-Up.....1 .....
173776AK.....Bolt Set, RE5R05A Bell Housing To Case (8 Pieces) 2002-Up .....1 .....
173777AK.....Bolt Set, RE5R05A Stator To Case (10 Pieces) 2002-Up .....1 .....
173778AK.....Bolt Set, RE5R05A Pump Body To Stator (Star Bit) (9 Pieces) 2002-Up.....1 .....
173779AK.....Bolt Set, RE5R05A Pan To Case (22 Pieces) 2002-Up .....1 .....
173781AK.....Bolt Set, RE5R05A Extension Housing To Case (10 Pieces) 2002-Up.....1 .....
173783AK.....Bolt Set, RE5R05A Center Support To Case (3 Pieces) 2002-Up .....1 .....
173843A .....C-Clip, RE5R05A Holds Case Connector In (.047" Thick)(1.305"Long) 2002-Up.....1 .....
173853A .....Cushion, RE5R05A Forward Clutch (.094") 5.878"OD (4.830"ID) 2002-Up.....1 .....
173857A .....Cushion, RE5R05A Reverse Clutch (.079") Dished (6 11/16"OD) 2002-Up .....1 .....
173857AA.....Cushion, RE5R05A Reverse Clutch (.094") Dished (6 11/16"OD) 2002-Up .....1 .....
173866A .....Snap Ring, RE5R05A Holds 3rd Sprag In Band Drum #610 (.037" Thick) 2.515"OD
.....(2.204"ID) 2002-Up .....1 .....
173866B .....Snap Ring, RE5R05A Holds 3rd Sprag In Band Drum #610 (.038" Thick) 2.690"OD
.....(2.375"ID) 2002-Up .....1 .....
173867A .....Snap Ring, RE5R05A Holds Overdrive Planet To Shell #594 (.078" Thick) 7 3/16"OD
.....(6 15/16"ID) 2002-Up .....1 .....
173871A .....Snap Ring, RE5R05A Holds Low Coast Clutch Springs In (.047" Thick) 2.268"OD
.....(2.002"ID) 2002-Up .....1 .....
173873A .....Snap Ring, RE5R05A Holds Input Clutch Pressure Plate In (.079" Thick) 6 3/4"OD
.....(6 3/8"ID) 2002-Up .....1 .....
173874A .....Snap Ring, RE5R05A Holds Input Clutch Retainer In (.063" Thick) 2.008"OD (1.736"ID)
.....2002-Up .....1 .....
173876CA.....Snap Ring, RE5R05A Holds Forward Clutch Pressure Plate In (.072" Thick)(6 5/16"OD)
.....2005-Up .....1 .....
173876CB.....Snap Ring, RE5R05A Holds Forward Clutch Pressure Plate In (.079" Thick)(6 5/16"OD)
.....2005-Up .....1 .....
173878A .....Snap Ring, RE5R05A Holds Direct Clutch Pressure Plate In (.086" Thick) 6 11/16"OD
.....2002-Up .....1 .....
173878AA.....Snap Ring, RE5R05A Holds Direct Clutch Pressure Plate In (.094" Thick) 6 11/16"OD
.....2002-Up .....1 .....
173878AB.....Snap Ring, RE5R05A Holds Direct Clutch Pressure Plate In (.102" Thick) 6 11/16"OD
.....2002-Up .....1 .....
173879A .....Snap Ring, RE5R05A Holds Direct Clutch Retainer In Drum (.062" Thick) 3.257"OD
.....(2.984"ID) 2002-Up .....1 .....
173881A .....Snap Ring, RE5R05A Holds Forward Planet Ring Gear To The Aluminum Rear Planet
.....(.063" Thick) 5.475"OD (5.096"ID) 2002-Up.....1 .....
173881B .....Retainer Ring, RE5R05A Holds Forward Planet Ring Gear To The Steel Rear Planet (5.190"OD)
.....(Tin With 15 Holes) 2002-Up.....1 .....
173882A .....Snap Ring, RE5R05A Holds High-Low Clutch Hub To Forward Sun Gear Shaft (.079" Thick)
.....1.916"OD (1.638"ID) 2002-Up.....1 .....
173883A .....Snap Ring, RE5R05A Holds Center Support In Case (.158" Thick) 7 1/4"OD (6 5/8"ID) 2002-Up.1 .....
173885A .....Snap Ring, RE5R05A Holds High-Low Clutch Pressure Plate In (.078" Thick) 5.322"OD
.....(4.935"ID) 2002-Up .....1 .....
173886C .....Snap Ring, RE5R05A Holds High/Low Clutch Retainer In (.040" Thick)(2.478"OD)(2.203"ID)
.....2005-Up .....1 .....
173888A .....Snap Ring, RE5R05A Holds 1st One Way Clutch Hub In Rear Sun Gear (.038" Thick)
.....2.789"OD (2.479"ID) 2002-Up.....1 .....
173890A .....Snap Ring, RE5R05A Holds Rear Sprag To Outer Race (.037" Thick)(3.935"OD) 2002-Up.....2 .....
173890AA.....Snap Ring, RE5R05A Holds Rear Sprag To Outer Race (.037" Thick)(3.830"OD) 2002-Up.....2 .....
173891A .....Snap Ring, RE5R05A Holds Reverse Clutch Spring In (.047" Thick) 7 3/16"OD (6 7/8"ID)
.....2002-Up .....1 .....
173891C .....Snap Ring, RE5R05A Holds Reverse Clutch Spring In (.066" Thick)(7 3/16"OD) 2005-Up .....1 .....
173892A .....Snap Ring, RE5R05A Holds Reverse Clutch Pressure Plate In Case (.078" Thick) 7 3/16"OD
.....(6 3/4"ID) 2002-Up .....1 .....
173900A .....Servo Assembly, RE5R05A Overdrive (Piston Cast # 31695) 2002-Up.....1 .....
173962A .....Piston, RE5R05A Input Clutch (Aluminum)(1.180" Thick)(6 3/8"OD) 2002-Up.....1 .....
173962AA.....Piston, RE5R05A Input Clutch (Aluminum)(1.255" Thick)(6 3/8"OD) 2002-Up.....1 .....
173962B .....Piston, RE5R05A Input Clutch (Aluminum)(1.970" Thick)(6 3/8"OD) 2002-Up.....1 .....
173965A .....Piston, RE5R05A Direct Clutch (Aluminum)(Cast # 11605-55201) 2002-Up .....1 .....
173965AA.....Piston, RE5R05A Direct Clutch (Aluminum)(Cast # 11601-55204) 2002-Up.....1 .....
173965AB.....Piston, RE5R05A Direct Clutch (Aluminum)(Cast # 11601 55203) 2002-Up.....1 .....
173966A .....Piston, RE5R05A Reverse Clutch (Aluminum)(1.015" Thick)(Uses An Outer D-Ring) 2002-Up ....1 .....

© Whatever It Takes Transmission Parts. Inc.

PART #	HARD PARTS (Continued)	QTY	REFERENCE #
173966AA	Piston, RE5R05A Reverse Clutch (Aluminum)(1.015”Thick)(Uses An Outer Lip Seal) 2002-Up	1	
173966C	Piston, RE5R05A Reverse Clutch (Aluminum)(1.195” Thick)(Uses An Outer Lip Seal) 2005-Up	1	
173967A	Piston, RE5R05A High-Low Clutch (Aluminum)(1.050” Thick)(4.880”OD) 2002-Up	1	
173967AA	Piston, RE5R05A High-Low Clutch (Aluminum)(1.225” Thick)(1.880”OD) 2002-Up	1	
173969A	Piston, RE5R05A Low Coast Clutch (Aluminum) (5.163”OD) 2002-Up	1	
173972A	Springs, RE5R05A Input Clutch Return (18 Springs With Retainer) 2002-Up	1	
173975A	Springs, RE5R05A Direct Clutch Return (With Retainer) (20 Springs) 2002-Up	1	
173976A	Spring, RE5R05A Reverse Clutch (Wavy, Coiled) (5 5/8”OD) 2002-Up	1	
173977A	Springs, RE5R05A High-Low Return (With Retainer) (18 Springs) 2002-Up	1	
173979A	Springs, RE5R05A Low Coast Clutch With Retainer (18 Springs) 2002-Up	1	
173982A	Retainer, RE5R05A Input Clutch Return Spring (With Bonded Rubber) (4 5/16”OD) 2002-Up	1	
173982AK	Retainer/Piston Kit, RE4R05A (With Bonded Rubber) 2002-Up (Contains: # 982, 985 & 987)	1	
173985A	Retainer, RE5R05A Direct Clutch Spring (With Bonded Rubber) (5”OD) 2002-Up	1	
173986A	Retainer, RE5R05A Reverse Clutch Spring (6 11/16”OD) 2002-Up	1	
173987A	Retainer, RE5R05A High-Low Clutch Spring (With Bonded Rubber) (4 3/16”OD) 2002-Up	1	
173991A	Linkage Assembly, RE5R05A Internal (With Roll Pins)(Driver’s Side) 2002-Up	1	
173991AA	Linkage Assembly, RE5R05A Internal (With Roll Pins)(Passenger’s Side) 2002-Up	1	
173995A	Park Pawl Assembly, RE5R05A (Driver’s Side Linkage)(4 Pieces) 2002-Up	1	
173995AA	Park Pawl Assembly, RE5R05A (Passenger’s Side Linkage) 2002-Up	1	

© Whatever It Takes Transmission Parts. Inc.

JATCO PRODUCTS

ROSTRA® Powertrain Controls

RE5R05A

TESTED FOR DURABILITY!
BUILT TO LAST!



Part #: 173433A
On/Off Solenoid, NC, 28 Ω
RE5R05A/JF011E



Part #: 173421A
NV Solenoid, PWM
RE5R05A
JF009/10/11E
JF015/16/17E



Part #: 173428A
NA Solenoid, PWM
RE5R05A
JF009/10/11E

See Our Other Jatco/CVT Offerings

STEPPER MOTORS

203452A
JF009/10E



Slant Bracket,
RE0F08A/RE0F09A/B

212452A
JF011E



Straight Bracket,
RE0F10A

SENSORS & SWITCHES

212438A
JF011E/JF015E



Sensor,
Straight Conn.

212436A
JF009/10/11E
JF015/16/17E



Sensor,
90-Degree Conn.

212410A
JF011E/RE0F10A



MLPS
*Check Applications

CERTIFIED
IATF-16949
ISO-9001

WIT
WHATEVER IT TAKES
TRANSMISSION PARTS, INC

APPROVED OE SUPPLIER APPROVED

www.wittrans.com (800) 940-0197

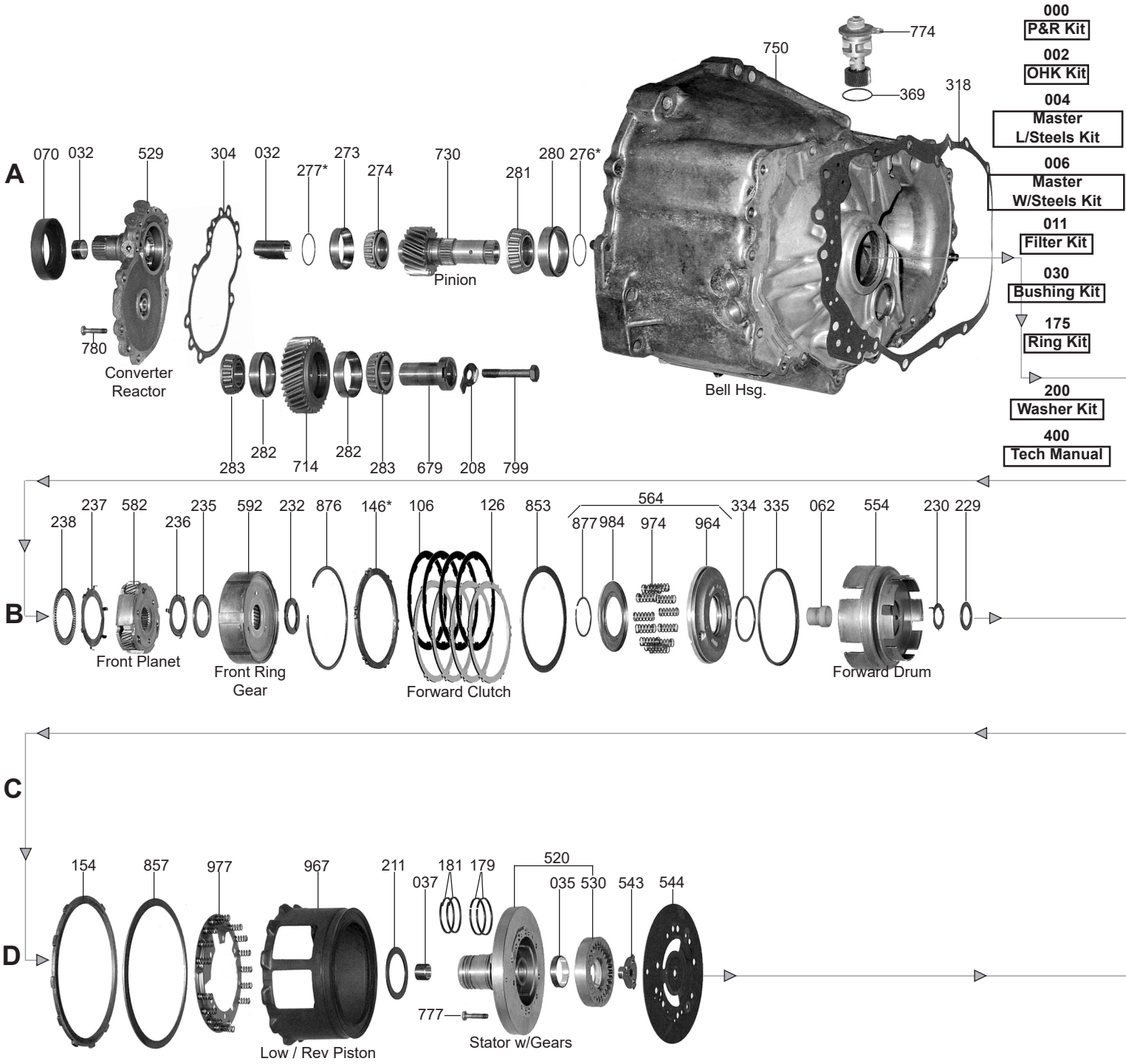

© Whatever It Takes Transmission Parts. Inc.

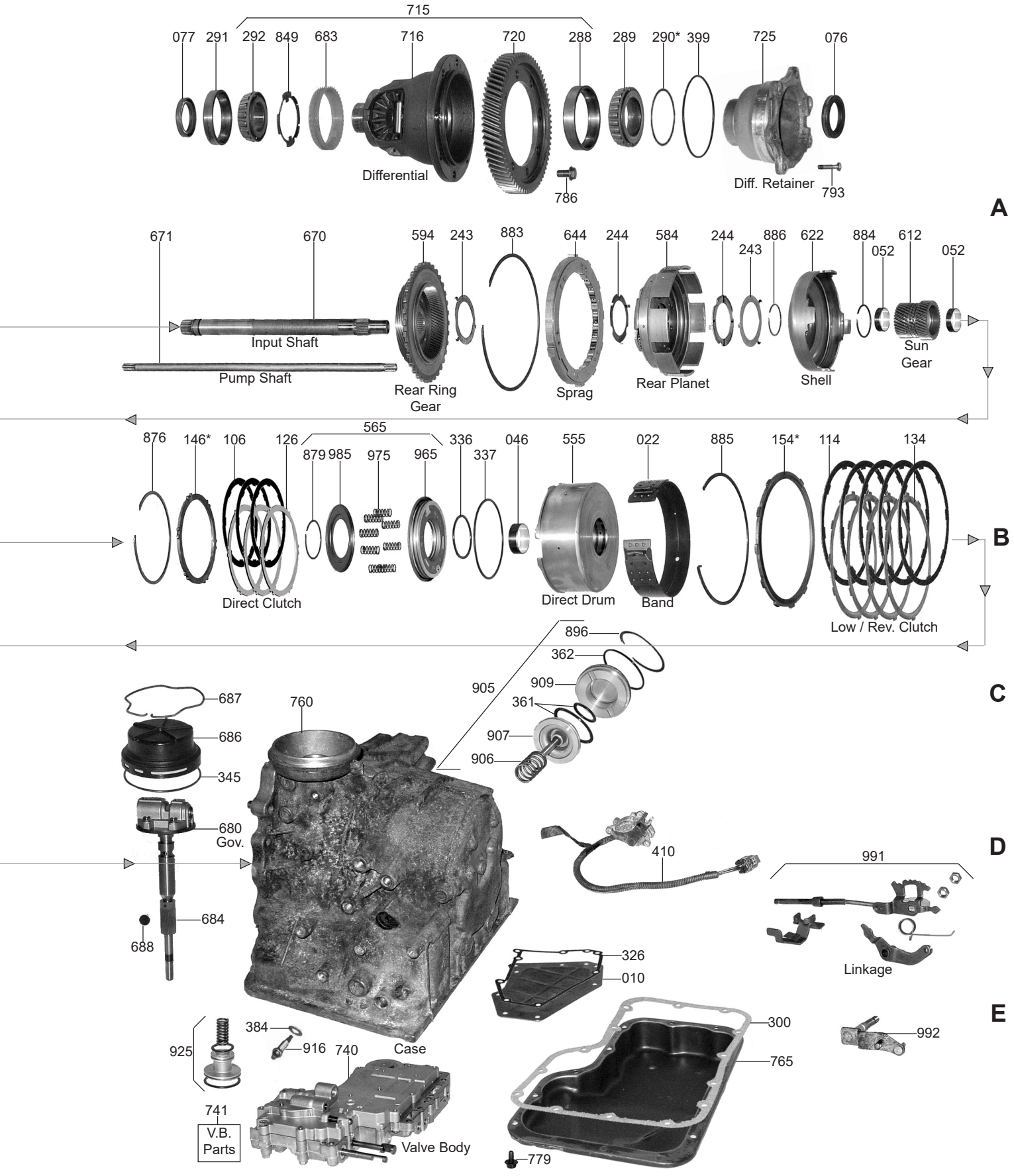

© Whatever It Takes Transmission Parts. Inc.

PART #	PAPER & RUBBER KIT	QTY.	REFERENCE #
43000	Paper & Rubber Kit, RL3F01A/RN3F01A 1981-Up	1	

PART #	OVERHAUL KITS	QTY.	REFERENCE #
43002	Overhaul Kit, RL3F01A/RN3F01A 1981-Up	1	

PART #	MASTER L/STEEL KIT	QTY.	REFERENCE #
43004	Master L/Steels Kit, RL3F01A/RN3F01A 1981-Up	1	
43004A	Master L/Steels Kit, RIL3F01A/RN3F01A With Turbo 1983-92	1	

PART #	MASTER W/STEEL KIT	QTY.	REFERENCE #
43006	Master W/Steels Kit, RL3F01A/RN3F01A Non-Turbo 1981-92 (With 12 Teeth Direct Steels)		
	(If Customer Has 24 Teeth Direct Steels Sell 93126AA Also)	1	
43006A	Master W/Steels Kit, RL3F01A/RN3F01A With Turbo 1983-92 (With 12 Teeth Direct Steels)		
	(If Customer Has 24 Teeth Direct Steels Sell 93126AA Also)	1	

PART #	FILTER	QTY.	REFERENCE #
43010	Filter, RL3F01A/RN3F01A 1981-86	1	31728-01X09
43010A	Filter, RL3F01A/RN3F01A (Except 310) Deep Pick-Up 1987-Up	1	31728-01X10

PART #	FILTER KIT	QTY.	REFERENCE #
43011	Filter Kit, RL3F01A/RN3F01A 1981-86	1	
43011A	Filter Kit, RL3F01A/RN3F01A 1987-Up (Except 310) Deep Pick Up 1987-Up	1	

PART #	BANDS	QTY.	REFERENCE #
43022	Band, RL3F01A/RN3F01A Brake	1	31630-01X00

PART #	BUSHINGS	QTY.	REFERENCE #
43030	Bushing Kit, RL3F01A/RN3F01A 1981-Up	1	
43031	Bushing, RL3F01A/RN3F01A Converter Hub	1	31141-01X01
43032	Bushing, RL3F01A/RN3F01A Converter Reactor (Front)	1	31199-01X00
43032B	Bushing, RL3F01A/RN3F01A Converter Reactor (Rear)	1	31196-01X02
43035	Bushing, RL3F01A/RN3F01A Pump Gear	1	31349-01X00
43037	Bushing, RL3F01A/RN3F01A Stator	1	31343-01X00
43046	Bushing, RL3F01A/RN3F01A Front Drum	1	31513-01X00
43052	Bushing, RL3F01A / RN3F01A Sun Gear	1	31462-01X00
43062	Bushing, RL3F01A/RN3F01A Output Shaft (Plastic)	1	31483-01X00

PART #	METAL CLAD SEALS	QTY.	REFERENCE #
43070	Seal, RL3F01A/RN3F01A Front 1981-Up	1	31344-21X00
T43075	Replacement Seal For T43275	1	
43076	Seal, RL3F01A/RN3F01A Axle (Both Sides) 1981-Up	2	43252-M000
43078	Seal, RL3F01A/RN3F01A Speed-O Gear Shaft	1	32709-58500

PART #	FRICTION CLUTCH	QTY.	REFERENCE #
43106	Friction, RL3F01A/RN3F01A Forward & Direct Clutch (.071") 1981-Up (Non Turbo)	6	31532-01X00
43106A	Friction, RL3F01A/RN3F01A Forward & Direct Clutch (.063") 1981-Up (With Turbo)	7	31532-01X01
43114	Friction, RL3F01A/RN3F01A Low/Reverse Clutch (.079") 1981-Up	3-5	31536-21X01

PART #	STEEL CLUTCH	QTY.	REFERENCE #
43126	Steel, RL3F01A/RN3F01A Forward/Direct (.079")	5-7	31536-01X00
93126AA	Steel, RN3F01A/RN3F01A Direct Clutch (.079")(24 Narrow Teeth)	1	
43134	Steel, RL3F01A/RN3F01A Low/Reverse Clutch (.079")	3-5	31666-01X00

PART #	CLUTCH PRESSURE PLATES	QTY.	REFERENCE #
43146	Pressure Plate, RL3F01A/RN3F01A Forward & Direct(.134")	1	31537-01X05
43146A	Pressure Plate, RL3F01A/RN3F01A Forward & Direct(.142")	1	31537-01X00
43146B	Pressure Plate, RL3F01A/RN3F01A Forward & Direct(.150")	1	31537-01X01

© Whatever It Takes Transmission Parts. Inc.

43146C	Pressure Plate, RL3F01A/RN3F01A Forward & Direct(.157")	1	31537-01X02
43146D	Pressure Plate, RL3F01A/RN3F01A Forward & Direct(.165")	1	31537-01X03
43146E	Pressure Plate, RL3F01A/RN3F01A Forward & Direct(.173")	1	31537-01X04
43154	Pressure Plate, RL3F01A/RN3F01A Low/Reverse (.142")	1	31667-01X00
43154A	Pressure Plate, RL3F01A/RN3F01A Low/Reverse (.150")	1	31667-01X01
43154B	Pressure Plate, RL3F01A/RN3F01A Low/Reverse (.157")	1	31667-01X02
43154C	Pressure Plate, RL3F01A/RN3F01A Low/Reverse (.165")	1	31667-01X03

PART #	OIL SEALING RINGS	QTY.	REFERENCE #
43175	Ring Kit, RL3F01A/RN3F01A 1981-Up (Metal)	1	
43175T	Ring Kit, RL3F01A/RN3F01A 1981-Up (Teflon)	1	
43179	Ring, RL3F01A/RN3F01A Direct Clutch Drum (Metal)	2	31361-01X00
43179T	Ring, RL3F01A/RN3F01A Direct Clutch Drum (Teflon)	2	
43181	Ring, RL3F01A/RN3F01A Forward Clutch Drum (Metal)	2	31362-01X00
43181T	Ring, RL3F01A/RN3F01A Forward Clutch Drum (Teflon)	2	

PART #	WASHERS & BEARINGS	QTY.	REFERENCE #
43200	Washer Kit, RL3F01A/RN3F01A (W/Out Bearings) (7 Pieces) 1981-Up	1	
43200A	Washer Kit, RL3F01A/RN3F01A (W/Out Bearings) (10 Pieces) 1981-Up	1	
43200B	Washer Kit, RL3F01A/RN3F01A (W/Out Bearings) (12 Pieces) 1981-Up	1	
43208	Lock Washer, RL3F01A/RN3F01A Idler Sahft Bolt	1	
43211	Washer, RL3F01A/RN3F01A Between Stator & Direct Drum (Black Plastic)	1	31508-01X00
43229	Bearing, RL3F01A/RN3F01A Between Forward Drum & Stator	1	31555-01X00
43230	Race, RL3F01A/RN3F01A Between Forward Drum & Stator	1	31556-01X00
43232	Washer, RL3F01A/RN3F01A Hub To Forward Drum (Black Plastic) (No Tabs)	1	31508-01X01
43232A	Washer, RL3F01A/RN3F01A Hub To Forward Drum (3 Tabs)	1	
43232B	Washer, RL3F01A/RN3F01A Hub To Forward Drum (2 Tabs) 1990-Up	1	31508-01X02
43235	Bearing, RL3F01A/RN3F01A Between Front Planet & Ring Gear Hub	1	31435-01X01
43236	Race, RL3F01A/RN3F01A Between Front Planet & Hub	1	
43237	Race, RL3F01A/RN3F01A Between Bowl & Front Planet (6 Tab)	1	31434-01X01
43238	Bearing, RL3F01A/RN3F01A Between Bowl & Front Planet	1	31435-01X00
43243	Race, RL3F01A/RN3F01A Rear Planet	2	31436-01X01
43244	Washer, RL3F01A/RN3F01A Rear Planet	2	31436-01X01
T43275	Axle Stabilizer, Nissan	1	
43276	Shim, RL3F01A/RN3F01A Output Shaft To Rear Ring Gear	1	
43277	Shim, RL3F01A/RN3F01A Output Shaft To Front Cover	1	31439-01X00
43283	Bearing, RL3F01A/RN3F01A Idler Gear (Tapered Roller)	1	31492-01X00

PART #	GASKETS & RUBBER COMPONENTS	QTY.	REFERENCE #
43300	Gasket, RL3F01A/RN3F01A Bottom Pan	1	31397-01X01
43304	Gasket, RL3F01A/RN3F01A Front Cover 1981-Up	1	31198-01X02
43318	Gasket, RL3F01A/RN3F01A Converter Housing To Case 1981-Up	1	31309-01X02
43326	Gasket, RL3F01A/RN3F01A Filter	1	31729-01X00
43380	O-Ring, RL3F01A/RN3F01A Input Shaft Lock-Up O-Ring	1	

PART #	TECHNICAL MANUALS	QTY.	REFERENCE #
43400	Technical Manual, RL3F01A/RN3F01A Nissan	1	83-RL3F01ATM

PART #	HARD PARTS	QTY.	REFERENCE #
43520	Stator, RL3F01A/RN3F01A With Gears	1	31397KA030
43529	Converter Reactor, RL3F01A/RN3F01A (1 Bushing Inside Tube)	1	
43529A	Converter Reactor, RL3F01A/RN3F01A (2 Bushing Inside Tube)	1	
43544	Plate, RL3F01A/RN3F01A Pump 1981-Up	1	31369-01X00
43554	Drum, RL3F01A/RN3F01A Forward Clutch (3 Clutch)	1	31541-01X62
43554A	Drum, RL3F01A/RN3F01A Forward Clutch (4 Clutch)	1	31541-01X63
43555	Drum, RL3F01A/RN3F01A Direct Clutch (3 Clutch) 5" Piston	1	ZFN64916
43555A	Drum, RL3F01A/RN3F01A Direct Clutch (3 Clutch) 4 3/8" Piston	1	
43564	Piston Kit, RL3F01A/RN3F01A Forward Clutch	1	
43565	Piston Kit, RL3F01A/RN3F01A Direct Clutch (5" Piston)	1	
43565A	Piston Kit, RL3F01A/RN3F01A Direct Clutch (4 3/8" Piston)	1	
43582	Planet, RL3F01A/RN3F01A Front	1	31420-01X02
43584	Planet, RL3F01A/RN3F01A Rear	1	
43592	Ring Gear & Hub, RL3F01A/RN3F01A (Uses A Washer # 232 Without Tabs)	1	
43592A	Ring Gear & Hub, RL3F01A/RN3F01A (Uses A Washer # 232 With 3 Tabs)	1	
43594	Ring Gear, RL3F01A/RN3F01A Rear Planet	1	31450-01X02

© Whatever It Takes Transmission Parts. Inc.

PART #	HARD PARTS (Continued)	QTY.	REFERENCE #
43612	Sun Gear, RL3F01A/RN3F01A	1	31460-01X03
43622	Shell, RL3F01A/RN3F01A Connector	1	31465-01X01

PART #	SPRAGS & ONE WAY CLUTCHES	QTY.	REFERENCE #
43644	Sprag Assembly, RL3F01A/RN3F01A One Way Clutch With Race	1	31473-01X01

PART #	HARD PARTS (Continued)	QTY.	REFERENCE #
43670	Input Shaft, RL3F01A/RN3F01A (Non Lock-Up)	1	
43670A	Input Shaft, RL3F01A/RN3F01A (Lock-Up) With O-Ring Groove	1	
43671	Pump Shaft, RL3F01A/RN3F01A Oil Pump Drive	1	
43679	Shaft, RL3F01A/RN3F01A Idler Gear	1	
43680	Governor, RL3F01A/RN3F01A Assembly (Gear Length 1 1/4”)	1	
43680A	Governor, RL3F01A/RN3F01A Assembly (Gear Length 1 3/4”)	1	
43684	Gear, RL3F01A/RN3F01A Governor Gear (1 1/4” Long)	1	31894-01X01
43684A	Gear, RL3F01A/RN3F01A Governor Gear (1 3/4” Long)	1	
43686	Cover, RL3F01A/RN3F01A Governor (Plastic)	1	31875-01X00
43687	Retaining Clip, RL3F01A/RN3F01A For Governor Cap	1	31506-01X00
43688	Bolt, RL3F01A/RN3F01A Holds Governor In Case	1	
43714	Idler Gear, RL3F01A/RN3F01A (30 Teeth) 3.490”OD (W/Out Bearings)	1	31493-01X04
43714A	Idler Gear, RL3F01A/RN3F01A (31 Teeth) 3.605”OD (W/Out Bearings)	1	31493-01X06
43714B	Idler Gear, RL3F01A/RN3F01A (33 Teeth) 3.794”OD (W/Out Bearings)	1	31493-01X60
43714C	Idler Gear, RL3F01A/RN3F01A (32 Teeth) 3.706”OD (W/Out Bearings)	1	31493-01X02
43714D	Idler Gear, RL3F01A/RN3F01A (32 Teeth) 3.680”OD (W/Out Bearings)	1	31493-01X61
43714E	Idler Gear, RL3F01A/RN3F01A (34 Teeth) 3.910”OD (W/Out Bearings)	1	
43716	Differential Housing, RL3F01A/RN3F01A (Height 5 5/16” With 2 Tapered Bearings)	1	
43716B	Differential Housing, RL3F01A/RN3F01A (Height 5 5/16” With 1 Tapered Bearings) Has A Cup Race On The Other End	1	
43716C	Differential Housing, RL3F01A/RN3F01A (Height 5 9/16” With 1 Tapered Bearing) Has A Cup Race On The Other End	1	
43716D	Differential Housing, RL3F01A/RN3F01A (Height 5 9/16” With 2 Tapered Bearings)	1	
43720	Ring Gear, RL3F01A/RN3F01A Differential (72 Teeth) (1.578”ID To OD)	1	
43720A	Ring Gear, RL3F01A/RN3F01A Differential (72 Teeth) (1.550”ID To OD)	1	
43720B	Ring Gear, RL3F01A/RN3F01A Differential (73 Teeth) (1.630”ID To OD)	1	
43720C	Ring Gear, RL3F01A/RN3F01A Differential (73 Teeth) (1.605”ID To OD)	1	
43720D	Ring Gear, RL3F01A/RN3F01A Differential (74 Teeth)	1	
43720E	Ring Gear, RL3F01A/RN3F01A Differential (76 Teeth)	1	
43720F	Ring Gear, RL3F01A/RN3F01A Differential (71 Teeth)	1	
43725	Retainer, RL3F01A/RN3F01A Differential (6 Bolt With Bearing) 3 3/8” Tall (Aluminum)	1	
43725A	Retainer, RL3F01A/RN3F01A Differential (6 Bolt With Bearing) 3 9/16” Tall (Aluminum)	1	
43725B	Retainer, RL3F01A/RN3F01A Differential With Bearing (3 7/8” Tall)	1	
43725C	Retainer, RL3F01A/RN3F01A Differential (With Race) (Non Bearing Type)	1	
43730A	Pinion, RL3F01A/RN3F01A (Output Shaft) 21 Teeth (2.513”OD Of Gear)	1	31481-01X08
43730B	Pinion, RL3F01A/RN3F01A (Output Shaft) 22 Teeth (2.613”OD Of Gear)	1	31481-01X05
43730C	Pinion, RL3F01A/RN3F01A (Output Shaft) 24 Teeth (2.833”OD Of Gear)	1	31481-01X60
43730D	Pinion, RL3F01A/RN3F01A (Output Shaft) 20 Teeth (2.425”OD Of Gear)	1	31481-01X19
43730DA	Pinion, RL3F01A/RN3F01A (Output Shaft) 20 Teeth (2.400”OD Of Gear)	1	31481-01X07
43730E	Pinion, RL3F01A/RN3F01A (Output Shaft) 21 Teeth (2.540”OD Of Gear)	1	31481-01X63
43730F	Pinion, RL3F01A/RN3F01A (Output Shaft) 19 Teeth (2.327”OD Of Gear)	1	
43740	Valve Body Assembly, RL3F01A/RN3F01A (Non Lock-Up) Early	1	
43740A	Valve Body Assembly, RL3F01A/RN3F01A (Non Lock-Up) Late (With 2 Valves In Auxillary Section)	1	
43740B	Valve Body Assembly, RL3F01A/RN3F01A (Lock-Up) With Electric Switch	1	
43740C	Valve Body Assembly, RL3F01A/RN3F01A (Lock-Up) No Electric Switch	1	
43750	Bell Housing, RL3F01A/RN3F01A (Cast # E1 By Axle Seal) Square Starter Hole	1	
43750A	Bell Housing, RL3F01A/RN3F01A (Cast # E2 By Axle Seal) Square Starter Hole	1	
43750B	Bell Housing, RL3F01A/RN3F01A (Cast # X1 By Axle Seal)	1	
43750C	Bell Housing, RL3F01A/RN3F01A (Cast # FA2 By Axle Seal) 1 Threaded Starter Hole	1	
43760	Case, RL3F01A/RN3F01A (Non Lock-Up)	1	
43760A	Case, RL3F01A/RN3F01A (Lock-Up) With Electric Plug By Neutral Switch	1	
43765A	Pan, RL3F01A/RN3F01A Bottom	1	
43776K	Bolt Set, RL3F01A/RN3F01A Bell Housing To Case	1	
43777K	Bolt Set, RL3F01A/RN3F01A Pump To Case	1	
43779K	Bolt Set, RL3F01A/RN3F01A Pan To Case	1	
43780K	Bolt Set, RL3F01A/RN3F01A Converter Reactor To Bell Housing	1	
43782K	Bolt Set, RL3F01A/RN3F01A Valve Body To Case	1	
43786K	Bolt Set, RL3F01A/RN3F01A Ring Gear To Differential Housing	1	

© Whatever It Takes Transmission Parts. Inc.

43793K	Bolt Set, RL3F01A/RN3F01A Differential Retainer To Case	1	
43799	Bolt, RL3F01A/RN3F01A Idler Shaft	1	
43853	Cushion, RL3F01A/RN3F01A Forward Clutch	1	
43857	Cushion, RL3F01A/RN3F01A Low/Reverse Clutch	1	
43876	Snap Ring, RL3F01A/RN3F01A Forward & Direct Drum (Top)	2	
43877	Snap Ring, RL3F01A/RN3F01A Holds Forward Clutch Retainer In	1	
43879	Snap Ring, RL3F01A/RN3F01A Holds Direct Clutch Retainer In	1	
43883	Snap Ring, RL3F01A/RN3F01A Holds Low Sprag In Case	1	
43884	Snap Ring, RL3F01A/RN3F01A Sun Gear To Bowl	1	
43885	Snap Ring, RL3F01A/RN3F01A Holds Low/Reverse Pressure Plate In Case	1	
43886	Snap ring, RL3F01A/RN3F01A Holds Sun Gear To Shell	1	
43896	Snap Ring, RL3F01A/RN3F01A Holds Servo In	1	
43905	Servo Assembly, RL3F01A/RN3F01A	1	
43906	Spring, RL3F01A/RN3F01A Servo	1	
43907	Piston, RL3F01A/RN3F01A Servo	1	
43909	Cover, RL3F01A/RN3F01A Servo	1	
43919	Bolt, RL3F01A/RN3F01A Band Adjusing	1	
43925	Accumulator Assembly, RL3F01A/RN3F01A	1	
43964	Piston, RL3F01A/RN3F01A Forward Clutch	1	31544-01X05
43965	Piston, RL3F01A/RN3F01A Direct Clutch	1	
43967	Piston, RL3F01A/RN3F01A Low/Reverse Clutch	1	31644-01X04
43974	Spring, RL3F01A/RN3F01A Forward Clutch Return	1	
43975	Spring, RL3F01A/RN3F01A Direct Clutch Return	1	
43977	Retainer, RL3F01A/RN3F01A With Springs Low/Reverse Clutch	1	
43984	Retainer, RL3F01A/RN3F01A Forward Clutch Spring	1	
43985	Retainer, RL3F01A/RN3F01A Direct Clutch Spring	1	
43991	Linkage Assembly, RL3F01A/RN3F01A Internal	1	
43992	Linkage, RL3F01A/RN3F01A External	1	
43995	Park Pawl Assembly, RL3F01A/RN3F01A	1	

© Whatever It Takes Transmission Parts. Inc.

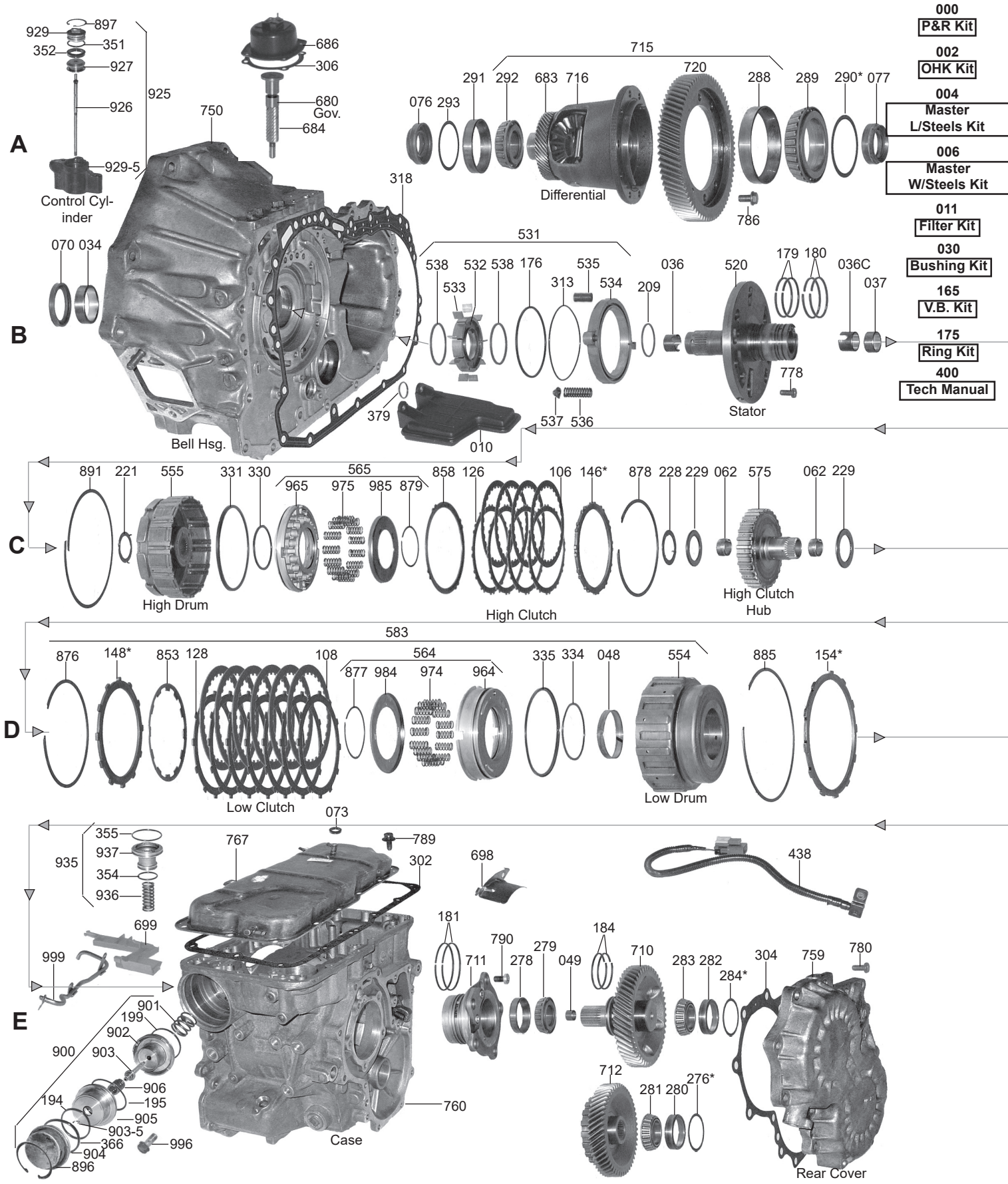

© Whatever It Takes Transmission Parts. Inc.

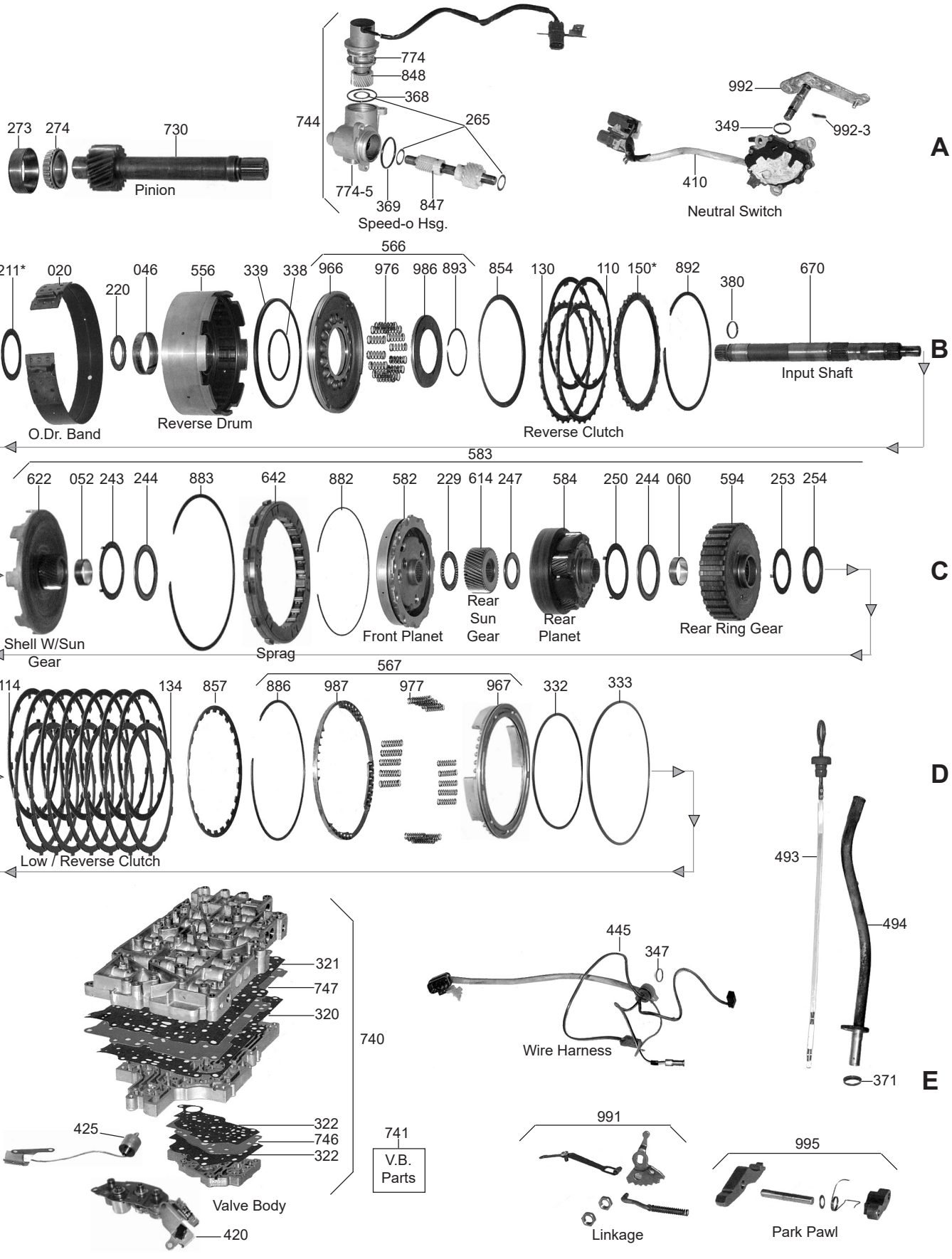

1-800-940-0197

© Whatever It Takes Transmission Parts. Inc.

PART #	PAPER & RUBBER KIT	QTY.	REFERENCE #
93000C	Paper & Rubber Kit, RL4F02A/RE4F02A 1985-Up	1	
93000H	Paper & Rubber Kit, RE4F02A (Axxess, Pintara) 1/1989-93	1	

PART #	OVERHAUL KITS	QTY.	REFERENCE #
93002C	Overhaul Kit, RL4F02A/RE4F02A Combo 1985-Up	1	
93002H	Overhaul Kit, RE4F02A (Axxess, Pintara) 1/1989-93	1	

PART #	MASTER L/STEEL KIT	QTY.	REFERENCE #
93004	Master L/Steels Kit, RL4F02A Maxima 1985-E88	1	
93004A	Master L/Steels Kit, RL4F02A 1985-6/1989	1	
93004B	Master L/Steels Kit, RL4F02A/RE4F02A Pulsar 1987-91	1	
93004C	Master L/Steels Kit, RE4F02A Maxima V-6 L1988-Up	1	
93004D	Master L/Steels Kit, RE4F02A Maxima 4 Cylinder L1988-91	1	
93004E	Master L/Steels Kit, RE4F02A Stanza 7/1989-Up	1	
93004G	Master L/Steels Kit, RL4F02A 7/1984-7/1985	1	
93004H	Master L/Steels Kit, RE4F02A (Axxess, Pintara) 1/1989-1993	1	

PART #	MASTER W/STEEL KIT	QTY.	REFERENCE #
93006	Master W/Steels Kit, RL4F02A Maxima 1985-E88	1	31548-21X01
93006A	Master W/Steels Kit, RL4F02A Stanza 1985-6/1989	1	
93006B	Master W/Steels Kit, RL4F02A/RE4F02A Pulsar 1987-91	1	
93006C	Master W/Steels Kit, RE4F02A Maxima V-6 L1988-Up	1	
93006D	Master W/Steels Kit, RE4F02A Maxima 4 Cylinder L1988-91	1	
93006E	Master W/Steels Kit, RE4F02A Stanza 7/1989-Up	1	
93006G	Master W/Steels Kit, RL4F02A 7/1984-7/85	1	
93006H	Master W/Steels Kit, RE4F02A (Axxess, Pintara) 1/1989-1993	1	

PART #	FILTER	QTY.	REFERENCE #
93010	Filter, RL4F02A/RE4F02A	1	31728-2X00

PART #	FILTER KIT	QTY.	REFERENCE #
93011	Filter Kit, RL4F02A/RE4F02A	1	

PART #	BANDS	QTY.	REFERENCE #
93020	Band, RL4F02A/RE4F02A Overdrive (1 1/2” Wide) (1 Groove Lining) 1985-Up	1	31630-21X00

PART #	BUSHINGS	QTY.	REFERENCE #
93030	Bushing Kit, RL4F02A/RE4F02A 12 Piece Kit 1984-94	1	
93030A	Bushing Kit, RL4F02A/RE4F02A 7 Piece	1	
93034	Bushing, RL4F02A/RE4F02A Bell Housing	1	31343-21X01
93036	Bushing, RN4F02A Stator (Front) Non Lock-up (2 Slots) .948”OD	1	31354-21X01
93036A	Bushing, RL4F02A/RE4F02A Stator (Front) Lock-up (1.030”OD)	1	
93036B	Bushing, RL4F02A/RE4F02A Stator (Front) (Pulsar)	1	
93036C	Bushing, RL4F02A/RE4F02A Stator (Center) (1 Slot)	1	31352-21X00
93037	Bushing, RL4F02A/RE4F02A Stator (Rear) (No Slots)	1	31363-21X01
93046	Bushing, RL4F02A/RE4F02A Reverse Drum (2 Slots)(Can Use 32046)	1	31513-21X00
32046	Bushing, RL4F02A/RE4F02A Reverse Drum	1	
93048	Bushing, RL4F02A/RE4F02A Low Clutch Drum	1	31579-21X00
93049	Bushing, RL4F02A/RE4F02A Output Shaft	1	31483-21X01
93052	Bushing, RL4F02A/RE4F02A Sun Gear	1	31462-21X04
93060	Bushing, RL4F02A/RE4F02A Rear Ring Gear	1	31453-21X00
93062	Bushing, RL4F02A/RE4F02A High Clutch Hub	2	31548-21X01

PART #	METAL CLAD SEALS	QTY.	REFERENCE #
93070	Seal, RL4F02A/RE4F02A Pump (Converter Housing)(No Notch) 1985-Up	1	31344-21X00
93070A	Seal, RL4F02A/RE4F02A Pump (Converter Housing) (With Notch) 1985-Up	1	
93073	Seal, RL4F02A/RE4F02A Throttle Shaft	1	31908-21X00
93076	Seal, RL4F02A/RE4F02A Right Axle (33 x 59 x 17mm)	1	38342-03E01
93076A	Seal, RL4F02A Right Axle (52 x 72 x 9mm) Stanza SW 2WD 1985-E89	1	38342-06R00
93076B	Seal, RL4F02A/RE4F02A Right Axle (60 x 78 x 9mm) Axxess 4x4 1989-Up	1	33111-56E00

© Whatever It Takes Transmission Parts. Inc.

93077	Seal, RL4F02A/RE4F02A Left Axle (39 x 57 x 17mm) All Maxima & Stanza 2WD 1985-E89	1	38342-21X01
93077A	Seal, RL4F02A/RE4F02A Left Axle (39 x 57 x 21.5mm) Axxess 2WD, Pulsar, Stanza Station Wagon 2WD & 4x4, & 2WD 1989-Up	1	38342-21X00
93077B	Seal, RE4F02A Left Axle (46 x 90 x 11mm) Stanza 2WD With Viscous Coupling 1989-Up	1	38342-21X03
93077C	Seal, RL4F02A/RE4F02A Left Axle (42 x 90 x 11.9mm) Axxess 4x4 1989-Up	1	38342-56E00
93078	Seal, RL4F02A/RE4F02A Speed-O Shaft	1	32709-58500

PART #	FRICTION CLUTCH	QTY.	REFERENCE #
93106	Friction, RL4F02A High Clutch (.077") 30 Wide Teeth (5.045"OD) 1985-88	3	31562-21X03
93106A	Friction, RL4F02A/RE4F02A High Clutch (.062") 30 Wide Teeth (5.045"OD) 1985-Up	4	31562-21X02
93106B	Friction, RL4F02A/RE4F02A High Clutch (.063") 30 Wide Teeth (5.235"OD) 1987-UP	4	31532-21X05
93106C	Friction, RL4F02A High Clutch (.075") 30 Narrow Teeth (5.045"OD) Stanza E1985	3	31562-21X00
93106D	Friction, RL4F02A High Clutch (.062") 30 Narrow Teeth (5.045"OD) E1985	4	31562-21X01
93108	Friction, RL4F02A/RE4F02A Low Clutch (.079") 30 Teeth (5.700"OD)	4-6	31592-21X00
93110	Friction, RL4F02A Reverse Clutch (.079") 8 Teeth 1985-89	2	31532-21X00
93110A	Friction, RL4F02A/RE4F02A Reverse Clutch (.079") 34 Teeth 1987-Up	2	31532-21X07
93110PK	Friction/Steel Kit, RE4F02A Reverse Clutch (.079") 8 Teeth 1985-89	1	
93114	Friction, RL4F02A/RE4F02A Low/Reverse Clutch (.079") 12 Teeth 1985-Up	5-7	31662-21X00

PART #	STEEL CLUTCH	QTY.	REFERENCE #
93126	Steel, RL4F02A/RE4F02A High Clutch (.055") 24 Narrow Teeth	7	31536-21X03
93126A	Steel, RL4F02A/RE4F02A High Clutch (.067") 24 Narrow Teeth	7	31536-21X02
93126AA	Steel, RL4F02A/RE4F02A High Clutch (.079") 24 Narrow Teeth	5	31566-21X00
93126AB	Steel, RL4F02A/RE4F02A High Clutch (.108") 24 Narrow Teeth	3	31566-21X02
93126AC	Steel, RL4F02A/RE4F02A High Clutch (.118") 24 Narrow Teeth	3	31566-21X01
93126B	Steel, RL4F02A/RE4F02A High Clutch (.118") 27 Teeth 1987-Up	3	31536-41X02
93126BA	Steel, RL4F02A/RE4F02A High Clutch (.079") 27 Teeth 1987-Up	5	31536-41X03
93126BB	Steel, RL4F02A/RE4F02A High Clutch (.108") 27 Teeth 1987-Up	3	
93126C	Steel, RE4F02A High Clutch (.095") 27 Teeth 1990-Up	4	31536-21X04
93128	Steel, RL4F02A/RE4F02A Low Clutch (.079") 12 Teeth 1985-Up	5-7	31596-21X01
93130	Steel, RL4F02A/RE4F02A Reverse Clutch (.079") 30 Round Teeth 1985-Up (For Cast Iron Drum)	2	31536-21X01
93130A	Steel, RL4F02A Reverse Clutch (.079") 30 Square Teeth 1986-89 (For Stamped Steel Drum)	2	31536-21X00
93134	Steel, RL4F02A/RE4F02A Low/Reverse Clutch (.079") 12 Teeth 1985-Up	5-7	31666-23X00

PART #	CLUTCH PRESSURE PLATES	QTY.	REFERENCE #
93146A	Pressure Plate, RL4F02A/RE4F02A High Clutch (.142") 24 Narrow Teeth	1	31567-21X00
93146AA	Pressure Plate, RL4F02A/RE4F02A High Clutch (.150") 24 Narrow Teeth	1	31567-21X01
93146AB	Pressure Plate, RL4F02A/RE4F02A High Clutch (.157") 24 Narrow Teeth	1	31567-21X02
93146B	Pressure Plate, RL4F02A/RE4F02A High Clutch (.165") 24 Narrow Teeth	1	31567-21X03
93146C	Pressure Plate, RL4F02A/RE4F02A High Clutch (.173") 24 Narrow Teeth	1	31567-21X04
93146D	Pressure Plate, RL4F02A/RE4F02A High Clutch (.181") 24 Narrow Teeth	1	31567-21X05
93146E	Pressure Plate, RL4F02A/RE4F02A High Clutch (.189") 24 Narrow Teeth	1	31567-21X06
93146F	Pressure Plate, RL4F02A/RE4F02A High Clutch (.197") 24 Narrow Teeth	1	31567-21X10
93146GA	Pressure Plate, RE4F02A High Clutch (.149") 24 Wide Teeth	1	
93148	Pressure Plate, RL4F02A/RE4F02A Low Clutch (.126")	1	31597-21X10
93148A	Pressure Plate, RL4F02A/RE4F02A Low Clutch (.134")	1	31597-21X11
93148B	Pressure Plate, RL4F02A/RE4F02A Low Clutch (.142")	1	31597-21X12
93148C	Pressure Plate, RL4F02A/RE4F02A Low Clutch (.150")	1	31597-21X13
93148D	Pressure Plate, RL4F02A/RE4F02A Low Clutch (.157")	1	31597-21X14
93148E	Pressure Plate, RL4F02A/RE4F02A Low Clutch (.165")	1	31597-21X15
93148M	Pressure Plate, RL4F02A/RE4F02A Low Clutch (.202")	1	
93148N	Pressure Plate, RL4F02A/RE4F02A Low Clutch (.210")	1	
93150	Pressure Plate, RL4F02A/RE4F02A Reverse Clutch (4.6mm) 30 Square Teeth (5.345"ID) (For Stamped Steel Drum) 1986-89	1	31537-21X10
93150A	Pressure Plate, RL4F02A/RE4F02A Reverse Clutch (4.8mm) 30 Square Teeth (5.345"ID) (For Stamped Steel Drum) 1986-89	1	31537-21X11
93150B	Pressure Plate, RL4F02A/RE4F02A Reverse Clutch (5.0mm) 30 Square Teeth (5.345"ID) (For Stamped Steel Drum) 1986-89	1	31537-21X12
93150C	Pressure Plate, RL4F02A/RE4F02A Reverse Clutch (5.2mm) 30 Square Teeth (5.345"ID) (For Stamped Steel Drum) 1986-89	1	31537-21X13
93150D	Pressure Plate, RL4F02A/RE4F02A Reverse Clutch (5.4mm) 30 Square Teeth (5.345"ID) For Stamped Steel Drum) 1986-89	1	31537-21X14
93150EA	Pressure Plate, RL4F02A/RE4F02A Reverse Clutch (4.6mm) 30 Round Teeth (5.345"ID) (For Cast Iron Drum) 1985-Up	1	
93150EB	Pressure Plate, RL4F02A/RE4F02A Reverse Clutch (4.8mm) 30 Round Teeth (5.345"ID) (For Cast Iron Drum) 1985-Up	1	
93150EC	Pressure Plate, RL4F02A/RE4F02A Reverse Clutch (5.0mm) 30 Round Teeth (5.345"ID) (For Cast Iron Drum) 1985-Up	1	

© Whatever It Takes Transmission Parts. Inc.

PART #	CLUTCH PRESSURE PLATES (Continued)	QTY.	REFERENCE #
93150ED	Pressure Plate, RL4F02A/RE4F02A Reverse Clutch (5.2mm) 30 Round Teeth (5.345"ID) (For Cast Iron Drum) 1985-Up	1	
93150EE	Pressure Plate, RL4F02A/RE4F02A Reverse Clutch (5.4mm) 30 Round Teeth (5.345"ID) (For Cast Iron Drum) 1985-Up	1	
93154	Pressure Plate, RL4F02A/RE4F02A Low/Reverse Clutch (.134")	1	31667-21X00
93154A	Pressure Plate, RL4F02A/RE4F02A Low/Reverse Clutch (.142")	1	31667-21X01
93154B	Pressure Plate, RL4F02A/RE4F02A Low/Reverse Clutch (.150")	1	31667-21X02
93154C	Pressure Plate, RL4F02A/RE4F02A Low/Reverse Clutch (.157")	1	31667-21X03
93154D	Pressure Plate, RL4F02A/RE4F02A Low/Reverse Clutch (.165")	1	31667-21X04
93154E	Pressure Plate, RL4F02A/RE4F02A Low/Reverse Clutch (.173")	1	31667-21X05
93154G	Pressure Plate, RL4F02A/RE4F02A Low/Reverse Clutch (.181")	1	31667-21X06
93154H	Pressure Plate, RL4F02A/RE4F02A Low/Reverse Clutch (.189")	1	31667-21X07
93154J	Pressure Plate, RL4F02A/RE4F02A Low/Reverse Clutch (.197")	1	31667-21X08
93154MC	Pressure Plate, RL4F02A/RE4F02A Low/Reverse Clutch (.464")	1	
93154MD	Pressure Plate, RL4F02A/RE4F02A Low/Reverse Clutch (.472")	1	
93154MG	Pressure Plate, RL4F02A/RE4F02A Low/Reverse Clutch (.494")	1	

PART #	VALVE BODY KITS	QTY.	REFERENCE #
T93165	Shift Kit, RL4F02A/RE4F02A 1986-90	1	SK® RE4F02A

PART #	OIL SEALING RINGS	QTY.	REFERENCE #
93175	Ring Kit, RL4F02A/RE4F02A	1	
73176	Ring, RL4F02A/RE4F02A Pump Slide (Metal)	1	
73179T	Ring, RL4F02A/RE4F02A Reverse Clutch (Teflon) (Also Fits Output Shaft)	2-4	
93180T	Ring, RL4F02A/RE4F02A High Drum (Teflon)	2	31558-21X00
73181T	Ring, RL4F02A/RE4F02A Low/Drum (Teflon)	2	
93184T	Ring, RL4F02A/RE4F02A Output Shaft (Teflon) (Use 73179T)	2	31487-21X00

PART #	WASHERS & BEARINGS	QTY.	REFERENCE #
93209	Spacer, RE4F02A Pump Stator Tube To Rotor (Plastic)	1	
93211	Washer, RL4F02A/RE4F02A Stator To Reverse Drum (.028") Plastic	1	31528-21X00
93211A	Washer, RL4F02A/RE4F02A Stator To Reverse Drum (.035") Plastic	1	31528-21X01
93211B	Washer, RL4F02A/RE4F02A Stator To Reverse Drum (.043") Plastic	1	31528-21X02
93211C	Washer, RL4F02A/RE4F02A Stator To Reverse Drum (.051") Plastic	1	31528-21X03
93211D	Washer, RL4F02A/RE4F02A Stator To Reverse Drum (.059") Plastic	1	31528-21X04
93211E	Washer, RL4F02A/RE4F02A Stator To Reverse Drum (.067") Plastic	1	31528-21X05
93211F	Washer, RL4F02A/RE4F02A Stator To Reverse Drum (.075") Plastic	1	31528-21X06
93220	(Use 73220)	1	
73220	Bearing W/Race, RL4F02A/RE4F02A Stator Support To High Drum	1	
93221	Race, RL4F02A/RE4F02A Stator To High Drum (.031") 3 Tab (Metal)	1	31429-21X00
93221A	Race, RL4F02A/RE4F02A Stator To High Drum (.039") 3 Tab (Metal)	1	31429-21X01
93221AA	Race, RL4F02A/RE4F02A Stator To High Drum (.047") 3 Tab (Metal)	1	31429-21X02
93221AB	Race, RL4F02A/RE4F02A Stator To High Drum (.055") 3 Tab (Metal)	1	31429-21X03
93221AC	Race, RL4F02A/RE4F02A Stator To High Drum (.063") 3 Tab (Metal)	1	31429-21X04
93221AD	Race, RL4F02A/RE4F02A Stator To High Drum (.071") 3 Tab (Metal)	1	31429-21X05
93221AE	Race, RL4F02A/RE4F02A Stator To High Drum (.079") 3 Tab (Metal)	1	31429-21X06
73228	Race, RL4F02A/RE4F02A High Drum To Hub (3 Inner Tabs) (Metal)	1	31439-21X00
93229	Bearing W/Race, RL4F02A/RE4F02A High Drum To Hub (Both Sides) & Front Planet (Rear) (Use 53232)	1-3	31436-X0100
53232	Bearing W/Race, RL4F02A/RE4F02A High Drum To Hub (Both Sides) & Front Planet (Rear) (.110" Thick)	1-3	31438-X0100
73243	Race, RL4F02A/RE4F02A Shell To Front Planet (Also Fits Rear Planet To Rear Ring Gear)	1-2	31464-21X00
73244	Bearing W/Race, RL4F02A/RE4F02A Shell To Front Planet & Rear Planet To Rear Ring Gear	1-2	31435-21X00
93247	Bearing W/Race, RL4F02A/RE4F02A Rear Sun Gear To Rear Planet	1	31428-X0100
93250	Race, RL4F02A/RE4F02A Rear Planet To Rear Ring Gear (Use 73243)	1	31464-21X00
93253	Race, RL4F02A/RE4F02A Rear Ring Gear To Rear Support	1	31456-21X00
93254	Bearing, RL4F02A/RE4F02A Rear Ring Gear To Rear Support	1	31455-21X00
93265	Washer, RL4F02A/RE4F02A (.477"ID) Speed-O Shaft To Adapter Housing	1	
93265B	Washer, RL4F02A/RE4F02A (.400") Speed-O Gear To Speed-O Housing	1	

PART #	GASKETS & RUBBER COMPONENTS	QTY.	REFERENCE #
93302	Gasket, RL4F02A/RE4F02A Top Pan Gasket	1	31396-21X01
93304	Gasket, RL4F02A/RE4F02A Transfer Gear Cover	1	31398-21X03
93308	Gasket, RE4F02A Pump Slide Control Cover (Accumulator Cover)	1	

© Whatever It Takes Transmission Parts. Inc.

93318	Gasket, RL4F02A/RE4F02A Bell Housing To Case	1	31309-21X04
93320C	Gasket, RL4F02A Valve Body To Case (Upper) 8/1985-94	1	
93320D	Gasket, RE4F02A Valve Body To Case (Upper) 8/1988-94	1	
93320K	Gasket Set, RE4F02A (Axxess/Pintara) (Valve Body & Auxillary) 1989-94	1	
93321C	Gasket, RL4F02A Valve Body To Spacer Plate (Lower) 8/1985-94	1	
93321D	Gasket, RE4F02A Valve Body To Spacer Plate (Lower) 8/1988-94	1	
93322CA	Gasket, RL4F02A/RE4F02A Lock-Up Valve Body (Upper)	1	
93322CB	Gasket, RL4F02A/RE4F02A Lock-Up Valve Body (Lower)	1	
93362	O-Ring, RL4F02A/RE4F02A Servo Cover	1	
93371	O-Ring, RL4F02A/RE4F02A Filler Tube	1	31084-21X01
93376A	O-Ring, RE4F02A Solenoid (Small) Takes 3	3	
93376B	O-Ring, RE4F02A Solenoid (Large) Takes 1	1	
93379	O-Ring, RL4F02A/RE4F02A Filter Screen	1	31729-21X01

PART #	TECHNICAL MANUALS	QTY.	REFERENCE #
93400A	Technical Manual, RL4F02A	1	83-FL4F02ATM
93400B	Technical Manual, RE4F02A	1	

PART #	ELECTRICAL COMPONENTS	QTY.	REFERENCE #
93410	Switch, RL4F02A/RE4F02A Neutral Safety (4 Prong Connector) With 16” Long Wire Harness	1	
93410A	Switch, RE4F02A Neutral Safety (1 - 6 Prong & 1 - 3 Prong Connector) With 12” Long Wire Harness	1	
93410B	Switch, RE4F02A Neutral Safety (1 - 7 Prong & 1 - 2 Prong Connector) With 13” Long Wire Harness	1	
93410C	Switch, RE4F02A Neutral Safety (4 Prong Connector) With 36” Long Wire Harness	1	
93420	Solenoid Assembly, RE4F02A (With Mounting Plate)	1	31940-27X66
93425A	Solenoid, RL4F02A Lock-Up	1	31940-21X04
93425B	Solenoid, RE4F02A Lock-Up	1	31940-27X63
93427A	Solenoid, RL4F02A/RE4F02A Overdrive	1	
93445	Wire Harness, RE4F02A (3 Prong Connector) 14” Long External Wire Harness From Connector To Case Plug	1	
93445A	Wire Harness, RE4F02A (3 Prong Connector) 7” Long External Wire Harness From Connector To Case Plug	1	
93445B	Wire Harness, RE4F02A (3 Prong Connector) 33 1/2” Long External Wire Harness From Connector To Case Plug	1	
93445C	Wire Harness, RE4F02A (7 Prong Connector) 15” Long External Wire Harness From Connector To Case Plug	1	

PART #	HARD PARTS	QTY.	REFERENCE #
93520B	Stator, RL4F02A/RE4F02A (3” Shaft With Step At Base) (Does Not Use A Plastic Spacer # 93209)	1	
93520BA	Stator, RL4F02A/RE4F02A(3” Shaft No Step) Uses A Plastic Spacer # 93209)	1	
93520C	Stator, RL4F02A/RE4F02A (3 1/4” Shaft With Step At Base) .850”ID Bushing (Does Not Use A Plastic Spacer # 93209)	1	
93520CA	Stator, RL4F02A/RE4F02A (3 1/4” Shaft With Step At Base) .945”ID Bushing (Does Not Use A Plastic Spacer # 93209) (Can Use 93520CC)	1	
93520CB	Stator, RL4F02A/RE4F02A (3 1/4” Shaft No Step) .850”ID Bushing (Uses A Plastic Spacer # 93209)	1	
93520CC	Stator, RL4F02A/RE4F02A (3 1/4” Shaft No Step) .945”ID Bushing (Uses A Plastic Spacer # 93209) (Can Use 93520CA)	1	

PART #	PUMP COMPONENTS	QTY.	REFERENCE #
93531	Rotor Kit, RL4F02A/RE4F02A Pump (With Vanes, Slide & Rotor)	1	
93532	Rotor, RL4F02A/RE4F02A Pump	1	
93533	Vane, RL4F02A/RE4F02A Pump	9	
93534	Slide, RL4F02A/RE4F02A Pump	1	
93535	Pin, RL4F02A/RE4F02A Pump Slide Pivot Pin	1	
93536	Spring, RL4F02A/RE4F02A Pump Slide	1	
93538	Ring, RL4F02A/RE4F02A Pump Vane	2	

© Whatever It Takes Transmission Parts. Inc.

PART #	HARD PARTS (Continued)	QTY.	REFERENCE #
93554	Drum, RL4F02A/RE4F02A Low Clutch (6 Clutch)(Use 93554C)	1	
93554A	Drum, RL4F02A/RE4F02A Low Clutch (4 Clutch) (Fits Front Planet With Half Moon Cuts Where The Drum Sits)	1	
93554AA	Drum, RL4F02A/RE4F02A Low Clutch (4 Clutch) (Fits Front Planet That Is Flat Where The Drum Sits) (No Half Moon Cuts)	1	
93554B	Drum, RL4F02A/RE4F02A Low Clutch (5 Clutch) (Fits Front Planet With Half Moon Cuts Where Drum Sits)	1	
93554BA	Drum, RL4F02E/RE4F02A Low Clutch (5 Clutch) (Fits Front Planet That Is Flat Where The Drum Sits) (No Half Moon Cuts)	1	
93554C	Drum, RL4F02A/RE4F02A Low Clutch (6 Clutch) (Fits Front Planet With Half Moon Cuts Where The Drum Sits)	1	
93554CA	Drum, RL4F02A/RE4F02A Low Clutch (6 Clutch) (Fits Front Planet That Is Flat Where The Drum Sits) (No Half Moon Cuts)	1	
93555	Drum, RL4F02A/RE4F02A High Clutch (27 Teeth Steels) 34 Teeth Reverse Clutch Hub	1	
93555A	Drum, RL4F02A/RE4F02A High Clutch (24 Teeth Steels) 38 Teeth Reverse Clutch Hub	1	
93555B	Drum, RE4F02A High Clutch (24 Teeth Steels) 38 Teeth Reverse Clutch Hub	1	
93556	Drum, RL4F02A/RE4F02A Reverse (Cast Iron) Most Maxima's	1	
93556A	Drum, RL4F02A/RE4F02A Reverse (Steel) Most Stanza's	1	
93564	Piston Kit, RL4F02A/RE4F02A Low Clutch (Uses D-Ring On Outer Seal)	1	
93564A	Piston Kit, RL4F02A/RE4F02A Low Clutch (Uses Lip Seal On Outer Seal)	1	
73565	Piston Kit, RL4F02A/RE4F02A High Drum (Fits 93555 Drum)	1	
93565	Piston Kit, RL4F02A/RE4F02A High Drum (Uses A D-Ring Outer Seal) (Fits 93555A Drum)	1	
93565A	Piston Kit, RL4F02A/RE4F02A High Drum (Uses A Lip Seal Outer Seal) (Fits 93555A Drum)	1	
73565A	PistonKit, RL4F02A/RE4F02A High Drum (W/10 Springs) (Fits 93555)	1	
93565B	Piston Kit, RE4F02A High Drum (Fits 93555B Drum)	1	
93566	Piston Kit, RL4F02A/RE4F02A Reverse (With 16 Spring Pockets)	1	
93566A	Piston Kit, RL4F02A/RE4F02A Reverse (With 20 Spring Pockets)	1	
93567	Piston Kit, RL4F02A/RE4F02A Low/Reverse Clutch	1	
93575	Clutch Hub, RL4F02A High Clutch (Stamped Steel) Uses Narrow Teeth Frictions E1985	1	
93575A	Clutch Hub, RL4F02A/RE4F02A High Clutch (Cast Iron) Uses Wide Teeth Frictions 1985-Up	1	
93582	Planet, RL4F02A/RE4F02A Front (No Groove) Half Moon Cuts Where #554 Sets (Use 93583)	1	
93582A	Planet, RL4F02A/RE4F02A Front (No Groove) Flat Where Low Drum #554 Sets (Use 93583A)	1	
93582B	Planet, RL4F02A/RE4F02A Front (1 Groove) With Half Moon Cuts Where #554 Sets (Use 93583)	1	
93582C	Planet, RL4F02A/RE4F02A Front (1 Groove) Flat Where Low Drum #554 Sets (Use 93583A)	1	
S93582FIX	Planet Fix, RE4F02A Front Planet Carrier Splined Repair Insert (Sonnax) With Hardened Splines	1	93897S
93583	Planet Kit, RL4F02A/RE4F02A Front Planet (With Half Moon Cuts Where #554 Sets) (Includes All Pieces From #622 To #876 & #554 Also) (We Leave Out Bushing #052 For Added Lube Per ATRA)	1	
93583A	Planet Kit, RL4F02A/RE4F02A Front Planet (Flat Where Low Drum #554 Sets) (Includes All Pieces From #622 To #876 & #554 Also) (We Leave Out Bushing #052 For Added Lube Per ATRA)	1	
93584A	Planet Kit, RL4F02A/RE4F02A Front Planet (1.315"OD Hub) No Groove On Outside Of Ring Gear (Fits A No Groove Front Planet)	1	
93584AA	Planet Kit, RL4F02A/RE4F02A (1.340"OD Hub) No Groove On Outside Of Ring Gear (Fits A No Groove Front Planet)	1	
93584B	Planet, RL4F02A/RE4F02A (1.340"OD Hub) 1 Groove On Outside Of Ring Gear (Fits A 1 Groove Front Planet) Has No Groove On Rear Sun Gear	1	
93594	Ring Gear, RL4F02A/RE4F02A Internal (Rear Planet) 1.315"ID Bushing	1	
93594A	Ring Gear, RL4F02A/RE4F02A Internal (Rear Planet) 1.340"ID Bushing	1	
93594B	Ring Gear, RL4F02A/RE4F02A Internal (Rear Planet) 1.415"ID No Bushing (No Groove On Outside Of Ring Gear)	1	
93594C	Ring Gear, RL4F02A/RE4F02A Internal (Rear Planet) 1.415"ID No Bushing (1 Groove On Outside Of Ring Gear)	1	
93614	Sun Gear, RL4F02A/RE4F02A Rear (No Groove)	1	
93614A	Sun Gear, RL4F02A/RE4F02A Rear (1 Groove)	1	
93622	Shell, RL4F02A/RE4F02A With Sun Gear (No Groove)	1	
93622A	Shell, RL4F02A/RE4F02A With Sun Gear (1 Groove)	1	

PART #	SPRAGS & ONE WAY CLUTCHES	QTY.	REFERENCE #
93642	Sprag Assembly, RL4F02A/RE4F02A One Way Clutch With Races	1	

© Whatever It Takes Transmission Parts. Inc.

PART #	HARD PARTS (Continued)	QTY.	REFERENCE #
93670	Input Shaft, RL4F02A/RE4F02A (11 5/16” Long) .848”OD Bushing Land At Front Stator Bushing	1	
93670A	Input Shaft, RL4F02A/RE4F02A (10 13/16” Long) .848”OD Bushing Land At Front Stator Bushing	1	
93670B	Input Shaft, RL4F02A/RE4F02A (11 5/16” Long) .940”OD Bushing Land At Front Stator Bushing	1	
93680A	Gear, RE4F02A Speed-O Transfer (Governor Shaft Without Governor Body)	1	
93680B	Governor, RL4F02A Assembly (With Aluminum Body)	1	
93680BA	Governor, RL4F02A Assembly (With Cast Iron Body)	1	
93680BB	Governor, RL4F02A Assembly (With Cast Iron Body With Butterfly Type Weights)	1	
93686	Cover, RL4F02A Governor (With Wide C Shaped Bracket)	1	
93686A	Cover, RL4F02A Governor (With Narrow C Shaped Bracket)	1	
93686B	Cover, RL4F02A Governor (With Wide 2 Threaded Hole Bracket)	1	
93686C	Cover, RL4F02A Governor (With Narrow 4 Hole Bracket)	1	
93686E	Cover, RE4F02A Speed-O (Flat)	1	
93698	Oil Shield, RL4F02A/RE4F02A For Pinion	1	
93699	Lube Gutter, RL4F02A/RE4F02A Differential	1	
93710	Gear, RL4F02A/RE4F02A Transfer Drive With Output Shaft (50 Teeth) Except Limited Slip Differential	1	
93710A	Gear, RL4F02A/RE4F02A Transfer Drive With Output Shaft (50 Teeth) With Limited Slip Differential	1	
93711	Support, RL4F02A/RE4F02A Low Drum	1	
93712	Gear, RL4F02A/RE4F02A Transfer Driven (51 Teeth) Except Limited Slip Differential	1	
93712A	Gear, RL4F02A/RE4F02A Transfer Driven (51 Teeth) With Limited Slip Differential	1	
93715	Differential, RL4F02A/RE4F02A (74 Teeth) 8 3/16”OD Gear (With 1 Bearing)	1	
93715A	Differential, RL4F02A/RE4F02A (74 Teeth) 8 5/16”OD Gear (With 1 Bearing)	1	
93715B	Differential, RL4F02A/RE4F02A (77 Teeth) 8 5/8”OD Gear (With 1 Bearing)	1	
93715C	Differential, RL4F02A/RE4F02A AWD (78 Teeth) No Groove (With 1 Bearing)	1	
93715D	Differential, RL4F02A/RE4F02A (77 Teeth) 2 Groove (With 2 Bearings) Limited Slip	1	
93715DA	Differential, RL4F02A/RE4F02A (76 Teeth) 1 Groove (With 2 Bearings) Limited Slip	1	
93715DB	Differential, RL4F02A/RE4F02A (76 Teeth) 3 Groove (With 2 Bearings) Limited Slip	1	
93715DC	Differential, RL4F02A/RE4F02A (76 Teeth) 2 Groove (With 1 Bearing)	1	
93715EA	Differential, RL4F02A/RE4F02A (75 Teeth) 1 Groove (With 1 Bearing)	1	
93716	Housing, RL4F02A/RE4F02A Differential (With 1 Bearing) Except Limited Slip	1	
93716D	Housing, RL4F02A/RE4F02A Differential (With 2 Bearings) With Limited Slip	1	
93720	Ring Gear, RL4F02A/RE4F02A (74 Teeth) 8 3/16”OD (Except Limited Slip)	1	
93720A	Ring Gear, RL4F02A/RE4F02A (74 Teeth) 8 5/16”OD (Except Limited Slip)	1	
93720B	Ring Gear, RL4F02A/RE4F02A (77 Teeth) 8 5/8”OD (Except Limited Slip)	1	
93720D	Ring Gear, RL4F02A/RE4F02A (77 Teeth) 2 Groove (With Limited Slip)	1	
93720DA	Ring Gear, RL4F02A/RE4F02A (76 Teeth) 1 Groove (With Limited Slip)	1	
93720DB	Ring Gear, RL4F02A/RE4F02A (76 Teeth) 3 Groove (With Limited Slip)	1	
93730	Pinion, RL4F02A/RE4F02A (22 Teeth)	1	
93730A	Pinion, RL4F02A/RE4F02A (19 Teeth)	1	
93730B	Pinion, RL4F02A/RE4F02A (21 Teeth) 3 Groove	1	
93730BA	Pinion, RL4F02A/RE4F02A (21 Teeth) No Groove	1	
93730C	Pinion, RL4F02A/RE4F02A (20 Teeth) No Groove	1	
93730CA	Pinion, RL4F02A/RE4F02A (20 Teeth) 2 Groove	1	
93730D	Pinion, RL4F02A/RE4F02A AWD (18 Teeth) 2 Groove	1	
93740	Valve Body, RL4F02A (Cast # 1A Or 2A) With 2 Solenoids	1	
93740A	Valve Body, RL4F02A (Cast # 1B, 2B Or 3B) With 2 Solenoids	1	
93740B	Valve Body, RE4F02A (Square Connector) With 5 Solenoids	1	
93740BA	Valve Body, RE4F02A (Round Connector) With 5 Solenoids	1	

PART #	VALVE BODY COMPONENTS	QTY.	REFERENCE #
S93741P-2	Sleeve, RE4F02A Boost Valve (Pressure Regulator) (Sonnax)	1	93990
S93741P-3	Spring Package, RE4F02A Main Pressure Regulator (For Elevated Pressure)(Sonnax) (Contains 20 Springs Per Pack)	1	

PART #	HARD PARTS (Continued)	QTY.	REFERENCE #
93750A	Bell Housing, RL4F02A (12 1/2” Dowels) 10:00 Starter (Bolts Are 2 Sizes)	1	
93750AA	Bell Housing, RL4F02A (12 1/2” Dowels) 10:00 Starter (Bolts Are 1 Size) Top Bolts Are 4 5/8” Center To Center	1	
93750AB	Bell Housing, RE4F02A (11 1/2” Dowels) 10:00 Starter (CASt # LD TA) Cast # Below Pump Except Limited Slip Differential	1	
93750AC	Bell Housing, RE4F02A (12 1/2” Dowels) 10:00 Starter (Bolts Are 1 Size (Top Bolts Are 6 1/16” .. Center To Center) Cast # CB)	1	

© Whatever It Takes Transmission Parts. Inc.

PART #	HARD PARTS (Continued)	QTY.	REFERENCE #
93750AD	Bell Housing, RE4F02A (11 1/2” Dowels) 10:00 Starter (Cast # TAV) Cast # Below Pump With Limited Slip Differential	1	
93750AE	Bell Housing, RL4F02A (11” Dowels) 10:00 Starter (Cast # FA2-F02A) Bell To Case Bolts Are 2 Different Sizes	1	
93750B	Bell Housing, RL4F02A (14” Dowels) Square Starter Hole (Bolts Are 2 Different Sizes)	1	
93750BB	Bell Housing, RE4F02A (14” Dowels) Square Starter Hole (Bolts Are 1 Size)	1	
93750C	Bell Housing, RL4F02A 4x4 (All Wheel Drive) Cast # AWD	1	
93759	Cover, RL4F02A/RE4F02A Transfer Gear	1	
93759B	Cover, RL4F02A/RE4F02A Transfer Gear (With Speed Sensor Hole)	1	
93760	Case, RL4F02A (3/4” Connector Hole) With Differential Bearing (The Bell To Case Bolts Are All The Same Size)	1	
93760A	Case, RE4F02A (7/8” Connector Hole) With Differential Bearing (The Bell To Case Bolts Are All The Same Size)	1	
93760AA	Case, RE4F02A (7/8” Connector Hole) With Differential Bearing (The Bell To Case Bolts Are 2 Different Sizes)	1	
93760B	Case, RL4F02A (3/4” Connector Hole) With Differential Bearing (The Bell To Case Bolts Are 2 Different Sizes)	1	
93760C	Case, RL4F02A 4x4 (AWD) With Differential Bearing Race	1	
93767	Pan, RL4F02A/RE4F02A Top (With 2 Brackets On The Side)	1	
93767A	Pan, RE4F02A Top (With 1 Bracket On Top)	1	
93774	Speed-O Housing, RL4F02A/RE4F02A Aluminum (Cable Type)	1	
93774-5	Adapter, RL4F02A/RE4F02A Speed-O Housing (Aluminum Elbow)	1	
93774B	Speed-O Housing, RL4F02A/RE4F02A (2 Wire Electric Type)	1	
93776K	Bolt Set, RL4F02A Bell Housing To Case (With The Same Diameter)	1	
93776AK	Bolt Set, RL4F02A Bell Housing To Case (With 2 Different Diameter)	1	
93778K	Bolt Set, RL4F02A/RE4F02A Stator To Bell Housing	1	
93780K	Bolt Set, RL4F02A/RE4F02A Rear Cover To Case	1	
93782K	Bolt Set, RL4F02A/RE4F02A Valve Body To Case	1	
93789K	Bolt Set, RL4F02A/RE4F02A Pan To Case	1	
93790K	Bolt Set, RL4F02A/RE4F02A Support (Low Drum) To Case (Use 93778K)	1	
93847	Speed-O Gear And Shaft, Rl4F02A/RE4F02A (15 Teeth Drive / 11 Teeth Driven Gear) Has 2 Gears On A Shaft (Between Governor Gear & Speed-O Gear)	1	
93848	Gear, RL4F02A/RE4F02A Driven Speed-O With Shaft (30 Teeth) Green (Cable Type)	1	
93848B	Gear, RL4F02A/RE4F02A Speed-O Driven (29 Teeth) Yellow (Fits The 2 Wire Electric Type Housing)	1	
93853	Cushion Spring, RL4F02A/RE4F02A Low Clutch (Between Pressure Plate & 1st Steel)	1	
93854	Cushion, RL4F02A/RE4F02A Reverse Clutch (No Teeth)	1	
93854A	Cushion, RL4F02A/RE4F02A Reverse Clutch (15 Teeth)	1	
93857	Beveled Spring, RL4F02A/RE4F02A Low/Reverse Clutch (.078”) 24 Teeth	1	
93857A	Beveled Spring, RL4F02A/RE4F02A Low/Reverse Clutch (.092”) No Teeth	1	
93858	Cushion, RL4F02A/RE4F02A High Clutch (8 Teeth) .062”	1	
93876	Snap Ring, RL4F02A/RE4F02A Holds Pressure Plate In Drum	1	
93877	Snap Ring, RL4F02A/RE4F02A Holds Low Clutch Retainer In Low Drum	1	
93878	Snap Ring, RL4F02A/RE4F02A High Drum (.078” Thick) Flat (5 9/16”OD) For Drum With 27 Teeth Steels	1	31541-21X01
93878A	Snap Ring, RL4F02A/RE4F02A High Drum (.098” Thick) Wavy (5 3/8”OD) For Drum With 24 Teeth Steels	1	
93878AA	Snap Ring, RL4F02A/RE4F02A High Drum (.078” Thick) Flat (5 3/8”OD) For Drum With 24 Teeth Steels	1	
93879	Snap Ring, RL4F02A/RE4F02A Holds High Clutch Retainer In High Drum	1	
93882	Snap Ring, RL4F02A/RE4F02A Holds Front Planet In Low Drum	1	
93883	Snap Ring, RL4F02A/RE4F02A Holds Outer Sprag Race In Case	1	
93885	Snap Ring, RL4F02A/RE4F02A Holds Low/Reverse Clutch Pressure Plate In Case	1	
93886	Snap Ring, RL4F02A/RE4F02A Holds Low/Reverse Clutch Retainer In Case	1	
93892	Snap Ring, RL4F02A/RE4F02A Holds Pressure Plate In Reverse Drum	1	
93892L	Snap Ring, RL4F02A/RE4F02A (Sets Above The 93598) Ends Lap Each Other (Cast Iron Drum Only) This Ring Doesn’t Hold Anything	1	
93893	Snap Ring, RL4F02A/RE4F02A Holds Reverse Clutch Retainer In Reverse Drum	1	
93896	Snap Ring, RL4F02A/RE4F02A Servo	1	
93897	Snap Ring, RL4F02A/RE4F02A Holds Control Cylinder In Housing	1	
93900	Servo Assembly, RL4F02A/RE4F02A (1.355”OD Piston)	1	
93900A	Servo Assembly, RL4F02A/RE4F02A (1.400”OD Piston)	1	
93900B	Servo Assembly, RL4F02A/RE4F02A (1.680”OD Piston)	1	
93901	Spring, RL4F02A/RE4F02A Servo	1	
93902	Housing, RL4F02A/RE4F02A Servo Piston Outer Ring	1	
93903	Piston, RL4F02A/RE4F02A Servo (1.355”OD)	1	
93903A	Piston, RL4F02A/RE4F02A Servo (1.400”OD)	1	

© Whatever It Takes Transmission Parts. Inc.

S93903BK	Pin & O-Ring Set, RL4F02A/RE4F02A Servo (Sonnax)	1	
93904	Cover, RL4F02A/RE4F02A Servo Piston (1.355”OD Piston)	1	
93904A	Cover, RL4F02A/RE4F02A Servo Piston (1.400”OD Piston)	1	
93925	Control Cylinder Assembly, RL4F02A/RE4F02A	1	
93926	Spring, RL4F02A/RE4F02A Control Cylinder	1	
93927	Piston, RL4F02A/RE4F02A Control Cylinder	1	
93929	Cover, RL4F02A/RE4F02A Control Cylinder	1	
93935	Accumulator Assembly, RL4F02A/RE4F02A (With Spring In Small End Of Piston)	1	
93935A	Accumulator Assembly, RL4F02A/RE4F02A (With Spring In Large End Of Piston)	1	
93936	Spring, RL4F02A/RE4F02A Accumulator	1	
93937	Piston, RL4F02A/RE4F02A Accumulator	1	
93964	Piston, RL4F02A/RE4F02A Low (Uses D-Ring On Outer Seal)	1	
93964A	Piston, RL4F02A/RE4F02A Low (Uses Lip Seal On Outer Seal)	1	
93965	Piston, RL4F02A/RE4F02A High (D-Ring Type Outer Seal)	1	
93965A	Piston, RL4F02A/RE4F02A High (Lip Seal Type Outer Seal)	1	
93966	Piston, RL4F02A/RE4F02A Reverse Clutch (With 16 Spring Pockets)	1	
93966A	Piston, RL4F02A/RE4F02A Reverse Clutch (With 20 Spring Pockets)	1	
93967	Piston, RL4F02A/RE4F02A Low/Reverse Clutch	1	
93974	Spring, RL4F02A/RE4F02A Low Clutch Return	1	
93975	Spring, RL4F02A/RE4F02A High Clutch Return	1	
93976	Spring, RL4F02A/RE4F02A Reverse Clutch Return	1	
93977	Spring, RL4F02A/RE4F02A Low/Reverse Clutch Return	1	
93984	Retainer, RL4F02A/RE4F02A Low Clutch Spring	1	
93985	Retainer, RL4F02A/RE4F02A High Clutch Spring	1	
93986	Retainer, RL4F02A/RE4F02A Reverse Clutch Spring (3.815”OD) Fits The Spring With 16 Spring Pockets	1	
93986A	Retainer, RL4F02A/RE4F02A Reverse Clutch Spring (3.575”OD) Fits The Spring With 20 Spring Pockets	1	
93987	Retainer, RL4F02A/RE4F02A Low/Reverse Clutch Spring	1	
93991	Linkage, RL4F02A/RE4F02A Internal With Park Rod	1	
93992	Shift Lever, RL4F02A/RE4F02A External (1 Pin, 1 Hole) Maxima	1	
93992-3	Roll Pin, RL4F02A/RE4F02A Holds External Shift Lever To Case	1	
93992A	Shift Lever, RL4F02A/RE4F02A External (1 Pin On Each End) Maxima	1	
93995	Park Pawl Assembly, RL4F02A/RE4F02A	1	31898-21X00
93996	Cooler Line Fitting, RL4F02A/RE4F02A	1	31502-21X04
93999	Lube Tube, RL4F02A/RE4F02A For Differential	1	

© Whatever It Takes Transmission Parts. Inc.

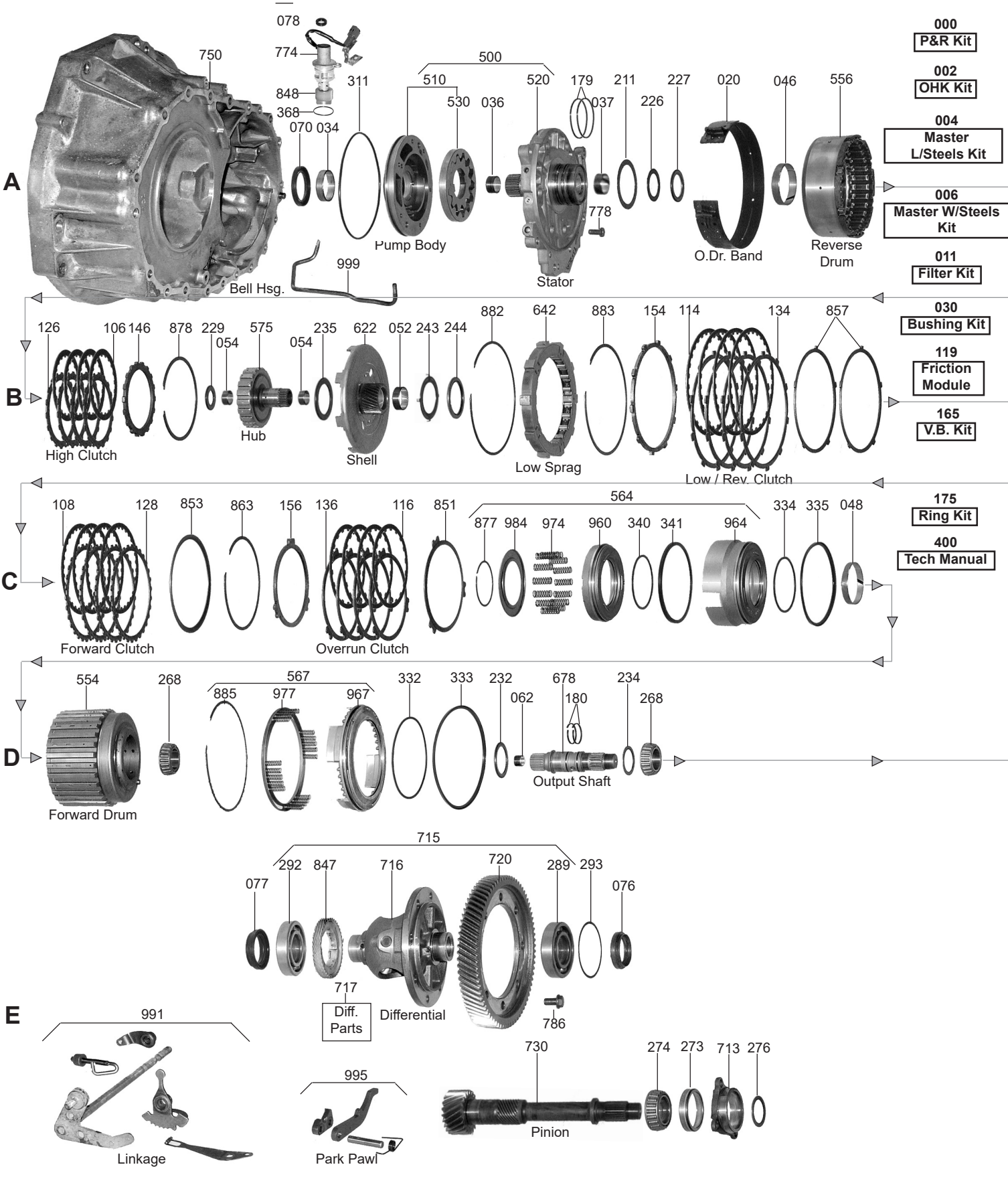

© Whatever It Takes Transmission Parts. Inc.

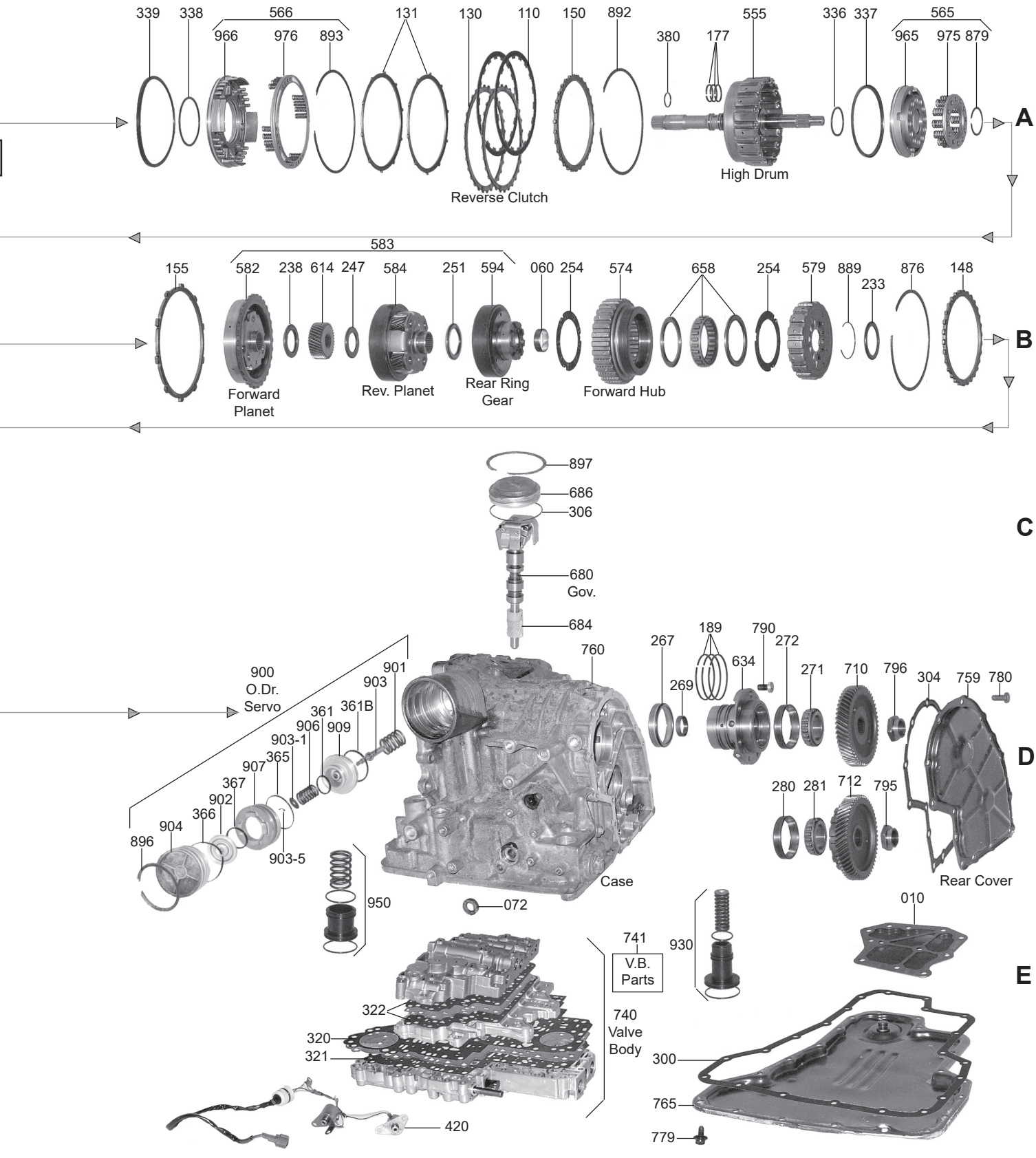

1-800-940-0197

© Whatever It Takes Transmission Parts. Inc.

NISSAN

RE4F03V / RE4F04V / 4F20E / JF403E

FWD 4 Speed

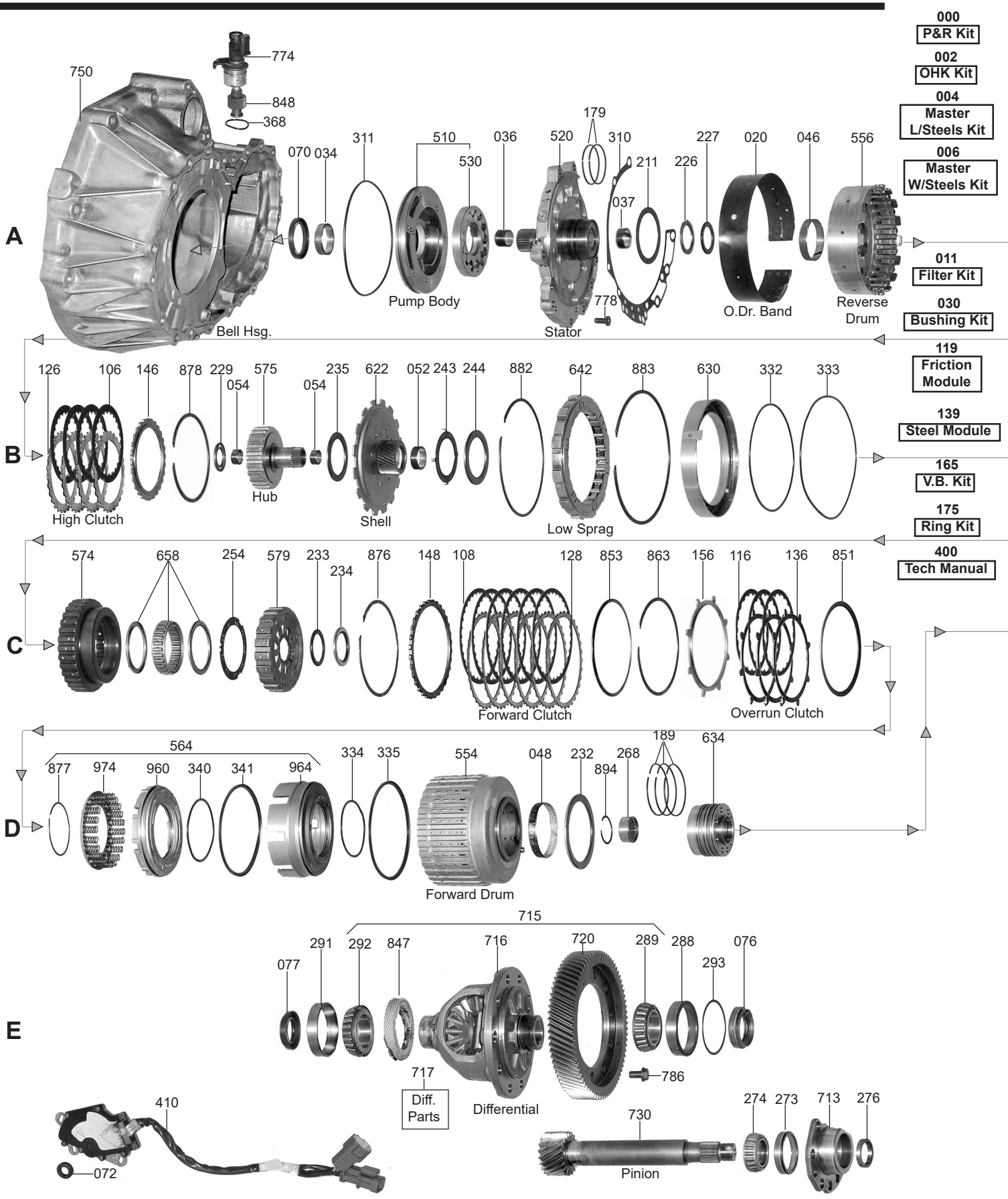

000 P&R Kit
002 OHK Kit
004 Master L/Steels Kit
006 Master W/Steels Kit
011 Filter Kit
030 Bushing Kit
119 Friction Module
139 Steel Module
165 V.B. Kit
175 Ring Kit
400 Tech Manual

NISSAN

© Whatever It Takes Transmission Parts. Inc.

RE4F03V / RE4F04V / 4F20E / JF403E

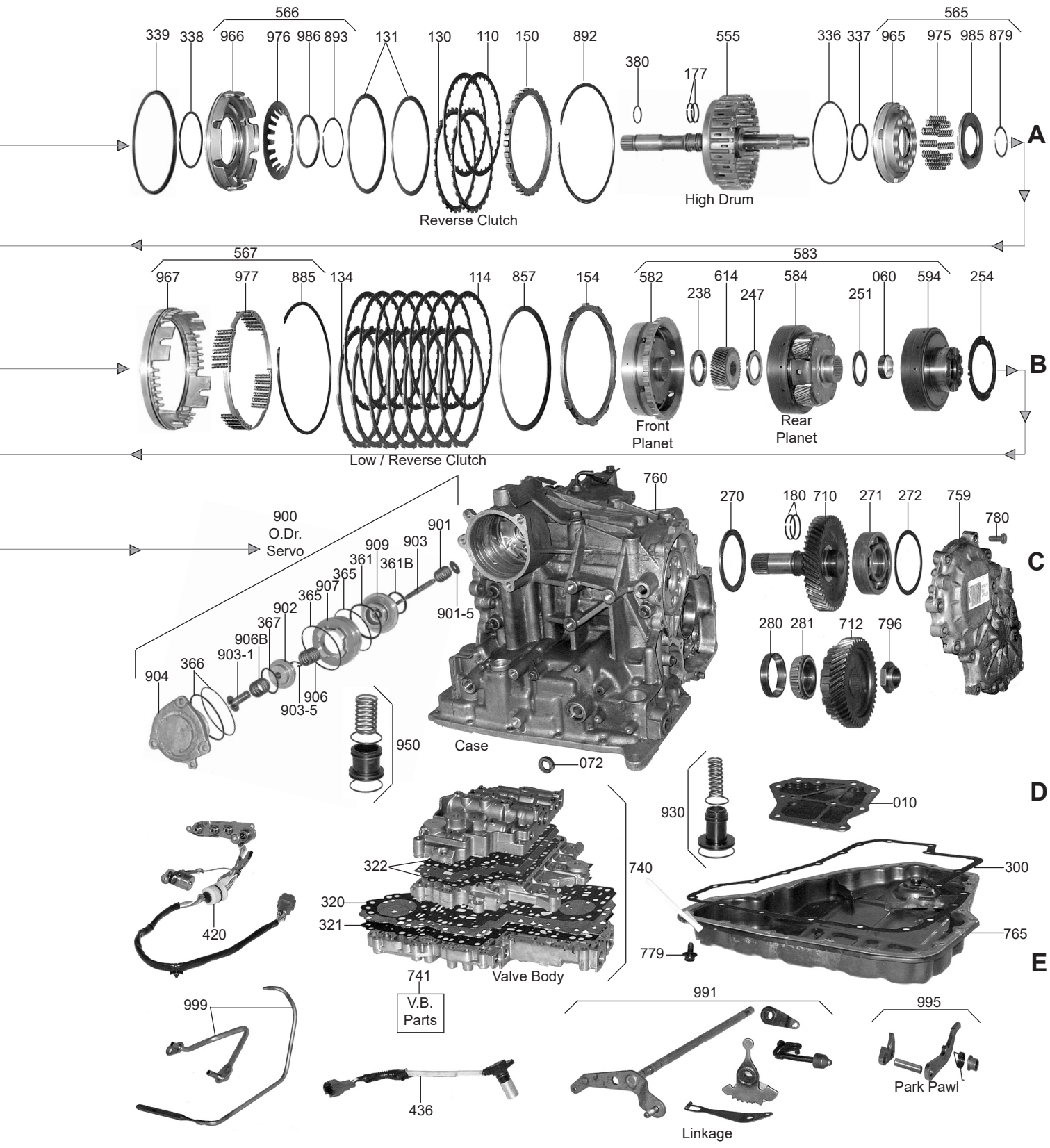

1-800-940-0197

© Whatever It Takes Transmission Parts. Inc.

PART #	PAPER & RUBBER KIT	QTY.	REFERENCE #
83000A	Paper & Rubber Kit, RL4F03A/RE4F03A/RE4F03V (Sentra, Infinity G20) 1991-Up	1	
83000AA	Paper & Rubber Kit, JF403E (LJ4-EL) (Mazda, GEO, Isuzu) 1990-Up	1	
83000B	Paper & Rubber Kit, RE4F04A/RE4F04V/4F20E (Altima, Maxima With DOHC, Quest, Villager) 1992-Up	1	

PART #	OVERHAUL KITS	QTY.	REFERENCE #
83002A	Overhaul Kit, RL4F03A/RE4F03A/RE4F03V (Sentra, Infinity G20) 1991-Up	1	
83002AA	Overhaul Kit, JF403E (LJ4A-EL, Mazda, Geo, Isuzu) 1990-Up	1	
83002B	Overhaul Kit, RE4F04A/RE4F04V/4F20E (Altima, Maxima With DOHC, Quest, Villager) 1992-Up	1	
83002C	Overhaul Kit, RE4F04B (Maxima) 2000-05	1	

PART #	MASTER L/STEEL KIT	QTY.	REFERENCE #
83004A	Master L/Steels Kit, RL4F03A/RE4F03A/RE4F03V (Sentra 1990-94) (Infinity G20 1991-02) (For 1995-Up Sentra Sell 5 - 83114AA Also)	1	
83004AA	Master L/Steels Kit, JF403E (Mazda, Geo, Isuzu) 1990-Up	1	
83004AB	Master L/Steels Kit, LJ4A-EL (Millenia 2.3L Supercharged) 1995-Up	1	
83004B	Master L/Steels Kit, RE4F04A/RE4F04V/4F20E (Altima, Maxima With DOHC, Quest, Villager & Infinity I30) 1992-Up	1	
83004C	Master L/Steels Kit, RE4F04B (Maxima) 2000-05 (For Bonded Pistons Sell 83960CK)	1	

PART #	MASTER W/STEEL KIT	QTY.	REFERENCE #
83006A	Master W/Steels Kit, RL4F03A/RE4F03A/RE4F03V (Sentra 1990-94) (Infinity 1991-02) (For 1995-Up Sentra Sell 5 - 83114AA Also)	1	
83006AA	Master W/Steels Kit, JF403E (Mazda, GEO, Isuzu) 1990-Up	1	
83006AB	Master W/Steels Kit, LJ4A-EL (Millenia 2.3L Supercharged) 1995-Up	1	
83006B	Master W/Steels Kit, RE4F04A/RE4F04V/4F20E (Altima, Maxima With DOHC, Quest, Villager & Infinity I30) 1992-Up	1	
83006C	Master W/Steels Kit, RE4F04B (Maxima) 2000-05 (For Bonded Pistons Sell 83960CK)	1	

PART #	FILTER	QTY.	REFERENCE #
83010AA	Filter, RL4F03A/RE4F03A/RL4F03V 1990-Up	1	31728-31X01
83010AE	Filter, JF403E (Isuzu, Impulse, Stylus) 1990-94	1	94385937
83010AG	Filter, LJ4A-EL (Mazda, Millenia 2.3L) 1995-Up	1	FX01-19-815
83010BA	Filter, RE4F04A/RE4F04B/RE4F04V/4F20E 1992-Up	1	31728-80X03
83010BC	Filter, RE4F04A/RE4F04B/RE4F04V (1 3/8” Pick-Up Tube) 2002-Up	1	31728-85X01

PART #	FILTER KIT	QTY.	REFERENCE #
83011AA	Filter Kit, RL4F03A/RL4F03V (Nissan Sentra, Infinity G20) (21 Bolt Shallow) 1990-Up	1	
83011AE	Filter Kit, JF403E (Isuzu, Impulse, Stylus) (21 Bolt Pan) 1990-94	1	
83011AG	Filter Kit, JF403E (Mazda, Millenia 2.3L) (22 Bolt Pan) 1995-Up	1	
83011BA	Filter Kit, RE4F04A/RE4F04V/4F20E (Nissan, Mercury Villager) (21 Bolt Deep) 1992-Up	1	

PART #	BANDS	QTY.	REFERENCE #
83020A	Band, RL4F03A/RE4F03A/RE4F03V Overdrive (1 5/16” Wide)	1	
83020AA	Band, RE4F03A/RE4F03V Overdrive (1 5/16” Wide) With Tab 2000-Up	1	
83020B	Band, RE4F04A/RE4F04B/4F20E Overdrive (1 5/8” Wide)	1	
83020C	Band, JF403E/LJ4A-EL Overdrive (1 9/16” Wide)	1	

PART #	BUSHINGS	QTY.	REFERENCE #
83030A	Bushing Kit, RL4F03A/RE4F03A/RE4F03V	1	
83030B	Bushing Kit, RE4F04A/RE4F04V	1	
83034A	Bushing, RL4F03A/RE4F03A Pump Body (1.775”OD)(1.654”ID)	1	
83034B	Bushing, RE4F04A Pump Body	1	
83036B	Bushing, RE4F04A Stator (Front)	1	
83037A	Bushing, RL4F03A/RE4F03A Stator (Rear)	1	
83037B	Bushing, RE4F04A Stator (Rear)	1	
83046B	Bushing, RE4F04A/4V/4B/LJ4A-EL Reverse Drum (2.320”OD) (2.215”ID)(.480”Wide) 1992-Up	1	

© Whatever It Takes Transmission Parts. Inc.

PART #	METAL CLAD SEALS	QTY.	REFERENCE #
83070A	Seal, RL4F03A/RL4F03V/RE4F03A/JF403E Front (.300" Thick)(2.332"OD)(1.680"ID) 1990-Up	1	
83070B	Seal, RE4F04A/4F20E Front 1992-Up	1	
83072A	Seal, RL4F03A/RE4F03A/RE4F03V Manual Lever 1990-Up	1	
83072B	Seal, RE4F04A/RE4FO4V/4F20E Manual Lever 1992-Up	1	
83076A	Seal, RL4F03A/RL4F03V/RE4F03A Axle (Both Side) (2.0L) 1990-Up	2	
42076A	Seal, JF403E/LJ4A-EL Axle Both Sides 1994-Up (.395" Thick)(2.205"OD)	2	
83076AA	Seal, RL4F03A/RL4F03V/RE4F03A Axle (Both Sides) (1.6L) 1990-Up	2	
83076B	Seal, RE4FO4A/RE4FO4V/4F20E Axle (Case Side) (Use 93076)	1	
84076	Seal, JF403E Axle Both Sides (2.155"OD) 1990-93	2	
93076	Seal, RE4FO4A/RE4FO4V/4F20E Axle (Case Side)	1	
83076C	Seal, RE4F04B Axle (Right Side Or Bell Housing Side) 2002-Up	2	
83077A	Use 83076A	1	
83077AA	Seal, RE4F03V Axle (Bell Housing Side) (With Viscous Coupling) 1990-Up	1	
83077B	Seal, RE4F04A/4F20E Axle (Bell Housing Side)(Without Viscous Coupling)(2.335"OD) 1992-Up	1	
83077BA	Seal, RE4F04V Axle (Bell Housing Side)(With Viscous Coupling)(3.550"OD) 1992-Up	1	
83077C	Seal, RE4F04B Axle (Left Side Or Case Side) 2002-Up	1	

PART #	FRICTION CLUTCH	QTY.	REFERENCE #
83106AA	Friction, RL4F03A/RL4F03V High Clutch (.079") 20 Teeth (4.190"OD) (.170" Wide Teeth) (1.6L) 1991-Up	4	
83106AB	Friction, RL4F03A/RL4F03V High Clutch (.063") 20 Teeth (4.090"OD) (.265" Wide Teeth) (Except 1.6L) 1991-Up	4	
83106B	Friction, RE4F04A/4F20E High Clutch (.063") 21 Teeth (4.400"OD) 1991-5/1994	4	
83106BA	Friction, RE4F04A/RE4F04B/4F20E High Clutch (.059") 24 Teeth (4.400"OD) 6/1994-Up	4	
83106BB	Friction, JF403E High Clutch (.063") 20 Teeth (4.400"OD)	3-4	
83108A	Friction, RE4F03A/RE4F03V Forward Clutch (.071") 30 Teeth (4.970"OD) 1991-Up	5	
83108B	Friction, RE4F04A/4F20E/JF403E Forward Clutch (.063") 32 Teeth (5.416"OD)	4-5	
83108BB	Friction, LJ4A-EL Forward Clutch (.055") 32 Teeth (Millenia) 1995-Up	6	
83110A	Friction, RL4F03A/RL4F03V Reverse Clutch (.077") 18 Teeth (5.140"OD) 1991-Up	2	
83110B	Friction, RE4F04A/4F20E/JF403E Reverse Clutch (.063") 28 Teeth (5.500"OD)	2	
83114A	Friction, RL4F03A/RL4F03V Low/Reverse Clutch (.077") 30 Teeth (5.895"OD) 1991-Up	5	
83114AA	Friction, RE4F03A/RE4F03V Low Reverse Clutch (.077") 30 Teeth (5.940"OD) (Kevlar) 1995-Up	5	
83114AB	Friction, RE4F03A/RE4F03V Low/Reverse Clutch (.077") 30 Teeth (5.940"OD) (Kevlar) 1995-Up (For Sentra Only, Has A Different Pitch On Teeth)	5	
83114B	Friction, JF403E Low/Reverse Clutch (.063") 32 Teeth (6.500"OD) 1990-Up	6-7	
83114BA	Friction, RE4F04A/4R20E Low/Reverse Clutch (.071") 32 Teeth (6.500"OD) 1990-Up	6-7	
83116A	Friction, RL4F03A/RL4F03V Overrun Clutch (.063") 18 Teeth (4.610"OD)	3	
83116B	Friction, RE4F04A/4F20E/JF403E Overrun Clutch (.063") 20 Teeth (5.00"OD) 1990-Up	3	
83119A	Friction Module, RL4F03A/RE4F03A/RE4F03V 1990-Up (Contains: Both 83106AA & 83106AB) (For 1995-Up Sentra Sell Five 83114AB Also)	1	
83119AE	Friction Module, JF403E 1990-Up	1	
83119B	Friction Module, RE4F04A/RE4F04V/4F20E 1992-Up	1	
83119C	Friction Module, RE4F04B 2000-06	1	

PART #	STEEL CLUTCH	QTY.	REFERENCE #
83126A	Steel, RL4F03A/RL4F03V High Clutch (.079") 18 Teeth (3.420"ID) 1991-Up	5	
83126AA	Steel, RE4F03A High Clutch (.059") 18 Teeth (3.420"ID) 1993-Up	6	
83126BA	Steel, RE4F04A/RE4F04V High Clutch (.059") 28 Teeth (3.615"ID) 1992-Up	6	
83126BB	Steel, RE4F04A/4F20E High Clutch (.079") 28 Teeth (3.615"ID) 1992-Up	1	
83126BC	Steel, JF403E High Clutch (.087") 28 Teeth (3.700"ID) 1990-92 (Uses 1 In 1993-Up)	5	
83126BD	Steel, JF403E High Clutch (.079") 28 Teeth (3.700"ID) 1993-Up	6	
83128A	Steel, RL4F03A/RL4F03V Forward Clutch (.079") 30 Teeth (4.525"ID) 1991-Up	5	
83128B	Steel, RE4F04A/4F20E/JF403E Forward Clutch (.071") 32 Teeth (4.930"ID) 1990-UP	5-6	
83128BB	Steel, LJ4A-EL Forward Clutch (.055") 32 Teeth (Millenia) 1995-Up	6	
83130A	Steel, RL4F03A/RL4F03V Reverse Clutch (.079") 30 Teeth (4.650"ID) 1991-Up	2	
83130B	Steel, RE4F04A/4F20E/JF403E Reverse Clutch (.071") 30 Teeth (5.000"ID) 1990-Up	2	
83130C	Steel, RE4F04B Reverse Clutch (.070")(32 Teeth)(4.955"ID) 2000-Up	2	
83131A	Steel, RE4F03A/RE4F03V Reverse Clutch (Dished) 10 Teeth (4.650"ID) 1991-Up	2	
83131B	Steel, RE4F04A/4F20E Reverse (Dished) 10 Teeth Or 15 Teeth (4.985"ID) (Takes 2 Per Trans)	2	
83131BA	Steel, RE4F04A/4F20E Reverse (Dished) No Teeth (4.985"ID) (Takes 2 Per Trans)	2	
83134A	Steel, RL4F03A/RL4F03V Low/Reverse Clutch (.079") 10 Teeth (5.470"ID) 1991-Up	5	
83134B	Steel, RE4F04A/RE4F04V/RE4F04B/4F20E Low/Reverse Clutch (.071") 10 Narrow .550" Wide Teeth (5.910"ID) 1992-Up	6-8	
83134C	Steel, JF403E/LJ4A-EL Low/Reverse Clutch (.071") 10 Wide .580" Wide Teeth (4.910"ID) 1991-Up	6	

© Whatever It Takes Transmission Parts. Inc.

PART #	STEEL CLUTCH (Continued)	QTY.	REFERENCE #
83136A	Steel, RL4F03A/RL4F03V Overrun Clutch (.079") 6 Teeth (4.130"ID) 1991-Up	5	
83136B	Steel, RE4F04A/4F20E/JF403E Overrun Clutch (.063") 8 Teeth (4.500"ID) 1992-Up	3-5	

PART #	CLUTCH PRESSURE PLATES	QTY.	REFERENCE #
83139B	Steel Module, RE4F04A/RE4F04V/4F20E 1992-Up	1	
83139BB	Steel Module, JF403E 1990-Up	1	
83146AA	Pressure Plate, RL4F03A High (3.430"ID) (.142")	1	
83146AB	Pressure Plate, RL4F03A High (3.430"ID) (.150")	1	
83146AC	Pressure Plate, RL4F03A High (3.430"ID) (.157")	1	
83146AD	Pressure Plate, RL4F03A High (3.430"ID) (.165")	1	
83146AE	Pressure Plate, RL4F03A High (3.430"ID) (.173")	1	
83146AF	Pressure Plate, RL4F03A High (3.430"ID) (.181")	1	
83146AG	Pressure Plate, RL4F03A High (3.430"ID) (.189")	1	
83146BA	Pressure Plate, RE4F04A/4F20E High (3.615"ID) (.118") Top	1	31537-81X10
83146BB	Pressure Plate, RE4F04A/4F20E High (3.615"ID) (.126") Top	1	31537-81X11
83146BC	Pressure Plate, RE4F04A/4F20E High (3.615"ID) (.134") Top	1	31537-81X12
83146BD	Pressure Plate, RE4F04A/4F20E High (3.615"ID) (.142") Top	1	31537-81X13
83146BE	Pressure Plate, RE4F04A/4F20E High (3.615"ID) (.150") Top	1	31537-81X14
83146BF	Pressure Plate, RE4F04A/4F20E High (3.615"ID) (.157") Top	1	31537-81X15
83146BG	Pressure Plate, RE4F04A/4F20E High (3.615"ID) (.165") Top	1	31537-81X16
83146BH	Pressure Plate, RE4F04A/4F20E High (3.615"ID) (.173") Top	1	31537-81X17
83148AA	Pressure Plate, RL4F03A Forward (4.525"ID) (.142")	1	
83148AB	Pressure Plate, RL4F03A Forward (4.525"ID) (.150")	1	
83148AC	Pressure Plate, RL4F03A Forward (4.525"ID) (.157")	1	
83148AD	Pressure Plate, RL4F03A Forward (4.525"ID) (.165")	1	
83148AE	Pressure Plate, RL4F03A Forward (4.525"ID) (.173")	1	
83148AF	Pressure Plate, RL4F03A Forward (4.525"ID) (.181")	1	
83148BA	Pressure Plate, RE4F04A/4F20E/JF403E Forward (4.930"ID) (.126")	1	
83148BB	Pressure Plate, RE4F04A/4F20E/JF403E Forward (4.930"ID) (.134")	1	
83148BC	Pressure Plate, RE4F04A/4F20E/JF403E Forward (4.930"ID) (.142")	1	
83148BD	Pressure Plate, RE4F04A/4F20E/JF403E Forward (4.930"ID) (.150")	1	
83148BE	Pressure Plate, RE4F04A/4F20E/JF403E Forward (4.930"ID) (.157")	1	
83148BF	Pressure Plate, RE4F04A/4F20E/JF403E Forward (4.930"ID) (.165")	1	
83148BG	Pressure Plate, RE4F04A/4F20E/JF403E Forward (4.930"ID) (.173")	1	
83150AA	Pressure Plate, RL4F03A Reverse (4.660"ID) (.142")	1	
83150AB	Pressure Plate, RL4F03A Reverse (4.660"ID) (.150")	1	
83150AC	Pressure Plate, RL4F03A Reverse (4.660"ID) (.157")	1	
83150AD	Pressure Plate, RL4F03A Reverse (4.660"ID) (.165")	1	
83150AE	Pressure Plate, RL4F03A Reverse (4.660"ID) (.173")	1	
83150AF	Pressure Plate, RL4F03A Reverse (4.660"ID) (.181")	1	
83150AG	Pressure Plate, RL4F03A Reverse (4.660"ID) (.189")	1	
83150BA	Pressure Plate, RE4F04A/4F20E/JF403E Reverse (4.960"ID) (.189")	1	
83150BB	Pressure Plate, RE4F04A/4F20E/JF403E Reverse (4.960"ID) (.197")	1	
83150BC	Pressure Plate, RE4F04A/4F20E/JF403E Reverse (4.960"ID) (.205")	1	
83150BD	Pressure Plate, RE4F04A/4F20E/JF403E Reverse (4.960"ID) (.213")	1	
83150BE	Pressure Plate, RE4F04A/4F20E/JF403E Reverse (4.960"ID) (.220")	1	
83150BF	Pressure Plate, RE4F04A/4F20E/JF403E Reverse (4.960"ID) (.260")	1	
83150BG	Pressure Plate, RE4F04A/4F20E/JF403E Reverse (4.960"ID) (.268")	1	
83150BH	Pressure Plate, RE4F04A/4F20E/JF403E Reverse (4.960"ID) (.276")	1	
83150BJ	Pressure Plate, RE4F04A/4F20E/JF403E Reverse (4.960"ID) (.283")	1	
83150BK	Pressure Plate, RE4F04A/4F20E/JF403E Reverse (4.960"ID) (.291")	1	
83150BL	Pressure Plate, RE4F04A/4F20E/JF403E Reverse (4.960"ID) (.299")	1	
83150BM	Pressure Plate, RE4F04A/4F20E/JF403E Reverse (4.960"ID) (.307")	1	
83154AA	Pressure Plate, RL4F03A Low/Reverse (5.475"ID) (.142")	1	
83154AB	Pressure Plate, RL4F03A Low/Reverse (5.475"ID) (.150")	1	
83154AC	Pressure Plate, RL4F03A Low/Reverse (5.475"ID) (.157")	1	
83154AD	Pressure Plate, RL4F03A Low/Reverse (5.475"ID) (.165")	1	
83154AE	Pressure Plate, RL4F03A Low/Reverse (5.475"ID) (.173")	1	
83154AF	Pressure Plate, RL4F03A Low/Reverse (5.475"ID) (.181")	1	
83154BA	Pressure Plate, RE4F04A/4F20E/JF403E Low/Reverse (5.910"ID) (.079")	1	
83154BB	Pressure Plate, RE4F04A/4F20E/JF403E Low/Reverse (5.910"ID) (.087")	1	
83154BC	Pressure Plate, RE4F04A/4F20E/JF403E Low/Reverse (5.910"ID) (.094")	1	
83154BD	Pressure Plate, RE4F04A/4F20E/JF403E Low/Reverse (5.910"ID) (.102")	1	
83154BE	Pressure Plate, RE4F04A/4F20E/JF403E Low/Reverse (5.910"ID) (.110")	1	
83154BF	Pressure Plate, RE4F04A/4F20E/JF403E Low/Reverse (5.910"ID) (.118")	1	
83154BG	Pressure Plate, RE4F04A/4F20E/JF403E Low/Reverse (5.910"ID) (.126")	1	
83154BH	Pressure Plate, RE4F04A/4F20E/JF403E Low/Reverse (5.910"ID) (.134")	1	

© Whatever It Takes Transmission Parts. Inc.

83155BA	Pressure Plate, RE4F04A Low/Reverse (5.910"ID) (.354") Bottom	1	
83156AA	Pressure Plate, RL4F03A Overrun (3 Lug) (.142")	1	
83156AB	Pressure Plate, RL4F03A Overrun (3 Lug) (.150")	1	
83156AC	Pressure Plate, RL4F03A Overrun (3 Lug) (.157")	1	
83156AD	Pressure Plate, RL4F03A Overrun (3 Lug) (.165")	1	
83156AE	Pressure Plate, RL4F03A Overrun (3 Lug) (.173")	1	
83156BA	Pressure Plate, RE4F04A/4F20E/JF403E Overrun (8 Lug) (.118")	1	
83156BB	Pressure Plate, RE4F04A/4F20E/JF403E Overrun (8 Lug) (.126")	1	
83156BC	Pressure Plate, RE4F04A/4F20E/JF403E Overrun (8 Lug) (.134")	1	
83156BD	Pressure Plate, RE4F04A/4F20E/JF403E Overrun (8 Lug) (.142")	1	
83156BE	Pressure Plate, RE4F04A/4F20E/JF403E Overrun (8 Lug) (.150")	1	

PART #	VALVE BODY KITS	QTY.	REFERENCE #
T83165A	Shift Kit, RL4F03A (With TV Cable) (Sentra 1991-99) (NX 1992-93) (200SX 1995-98) (Infinity G20 1991-93)	1	SK® RL4F03A
T83165B	Shift Kit, RE4F04A/4F20E (Maxima/Altima 1993-99) (Quest/Villager 1993-02) (Infinity I30 1993-99)	1	SK® RE4F04A
T83165BA	Shift Kit, RE4F03A (Without TV Cables) (Sentra GXE 1993-99) (200SX 1995-98) (Infinity G20 1994-99)	1	
T83165C	Shift Kit, LJ4AEL/JF403E (Mazda Millenia "S" 2.3L Super Charged 1995-03) (Geo Storm 1990-Up) (Isuzu Impulse/Gemini 1990-Up)	1	
T83165D	Shift Kit, RE4F03B 2000-Up (Transgo)	1	
T83165DA	Shift Kit, RE4F04B 2000-Up (Transgo)	1	
T83171A	Reprogramming Kit, RL4F03A (With TV Cable) (Hot Rod/Street Show Off) (Sentra XE & SE 1991-99) (Sentra NX 1992-93)	1	
T83171B	Reprogramming Kit, RE4F04A/4F20E (Trick Valve/Hot Rod/Street Show Off) (Maxima/Altima 1992-99) (Guest 1992-02) (Mercury Villager 1992-02) (Infinity I30 1995-99)	1	
T83171BA	Reprogramming Kit, RE4F03A (Without TV Cable) (Trick Valve/Hot Rod/Street Show Off) (Sentra GXE 1993-99) (200SZ 1995-98) (Infinity G20 1994-99)	1	
T83171C	Reprogramming Kit, LJ4AEL/JF403E (Trick Valve/Hot Rod/Street Show Off) (Mazda Millenia "S" 1995-03) (GeoStorm 1990-Up) (Isuzu Impulse & Gemini 1990-Up)	1	
T83171D	Reprogramming Kit, RE4F03A (Trick Valve/Hot Rod/Street Show Off) (Sentra 2000-04) (Infinity G20 2000-04)	1	
T83171DA	Reprogramming Kit, RE4F04A (Trick Valve/Hot Rod/Street Show Off) (Maxima/Altima 2000-04) (Infinity I30 2000-04)	1	

PART #	OIL SEALING RINGS	QTY.	REFERENCE #
83175A	Ring Kit, RL4F03A/RL4F03V/RE4F03A 1992-Up	1	
83175B	Ring Kit, RE4F04A/4F20E 1992-03	1	
83175C	Ring Kit, JF403E 1990-Up	1	
83177A	Ring, RL4F03A/RL4F03V/RE4F03A Input Shaft (Metal) 1990-Up	2	
83177B	Ring, RE4F04A/4F20E Input Shaft (Metal) 1992-Up	3	
83179A	Ring, RL4F03A/RL4F03V/RE4F03A Stator Support (Reverse Clutch) (Metal) 1990-91	2	
83179AT	Ring, RL4F03A/RL4F03V/RE4F03A Stator Support (Reverse Clutch) (Teflon) 1990-91	2	
83179B	Ring, RE4F04A/4F20E Stator Support (Reverse Clutch) (Metal) 1992-Up	2	
83179C	Ring, JF403E Stator Support (Reverse Clutch) (Metal) 1990-Up	3	
83180A	Ring, RL4F03A/RL4F03V/RE4F03A Output Shaft (1.6L Engine) (Metal) 1990-Up	2	
83180AA	Ring, RL4F03A/RL4F03V/RE4F03A Output Shaft (2.0L Engine) (Metal) 1990-Up	2	
83180B	Ring, RE4F04A/4F20E Output Shaft (Metal) 1992-Up	2	
83189A	Ring, RL4F03A/RL4F03V/RE4F03A Rear Support (Forward & Overrun Clutch) (Metal) 1990-Up	3	
83189B	Ring, RE4F04A/4F20E Rear Support (Forward & Overrun Clutch) (Metal) 1992-Up	3	

PART #	WASHERS & BEARINGS	QTY.	REFERENCE #
83211AA	Washer, RL4F03A Stator (2 13/16"OD) .025" (Plastic)	1	
83211AB	Washer, RL4F03A Stator (2 13/16"OD) .031" (Plastic)	1	
83211AC	Washer, RL4F03A Stator (2 13/16"OD) .037" (Plastic)	1	
83211AD	Washer, RL4F03A Stator (2 13/16"OD) .043" (Plastic)	1	
83211AE	Washer, RL4F03A Stator (2 13/16"OD) .049" (Plastic)	1	
83211AF	Washer, RL4F03A Stator (2 13/16"OD) .055" (Plastic)	1	
83211AG	Washer, RL4F03A Stator (2 13/16"OD) .061" (Plastic)	1	
83211BA	Washer, RE4F04A/4F20E/JF403E Stator (3"OD) .031" (Plastic)	1	
83211BB	Washer, RE4F04A/4F20E/JF403E Stator (3"OD) .037" (Plastic)	1	
83211BC	Washer, RE4F04A/4F20E/JF403E Stator (3"OD) .043" (Plastic)	1	
83211BD	Washer, RE4F04A/4F20E/JF403E Stator (3"OD) .049" (Plastic)	1	
83211BE	Washer, RE4F04A/4F20E/JF403E Stator (3"OD) .055" (Plastic)	1	
83211BF	Washer, RE4F04A/4F20E/JF403E Stator (3"OD) .061" (Plastic)	1	
83211BG	Washer, RE4F04A/4F20E/JF403E Stator (3"OD) .067" (Plastic)	1	
83211BH	Washer, RE4F04A/4F20E/JF403E Stator (3"OD) .073" (Plastic)	1	

© Whatever It Takes Transmission Parts. Inc.

PART #	WASHERS & BEARINGS (Continued)	QTY.	REFERENCE #
83226AA	Race, RL4F03A Stator To High Drum (1 7/8"OD) (.024")	1	
83226AB	Race, RL4F03A Stator To High Drum (1 7/8"OD) (.031")	1	
83226AC	Race, RL4F03A Stator To High Drum (1 7/8"OD) (.039")	1	
83226AD	Race, RL4F03A Stator To High Drum (1 7/8"OD) (.047")	1	
83226AE	Race, RL4F03A Stator To High Drum (1 7/8"OD) (.055")	1	
83226AF	Race, RL4F03A Stator To High Drum (1 7/8"OD) (.063")	1	
83226AG	Race, RL4F03A Stator To High Drum (1 7/8"OD) (.071")	1	
83226AH	Race, RL4F03A Stator To High Drum (1 7/8"OD) (.079")	1	
83226AJ	Race, RL4F03A Stator To High Drum (1 7/8"OD) (.087")	1	
83226BA	Race, RE4F04A/4F20E/JF403E Stator (2"OD) (.031")	1	
83226BB	Race, RE4F04A/4F20E/JF403E Stator (2"OD) (.035")	1	
83226BC	Race, RE4F04A/4F20E/JF403E Stator (2"OD) (.039")	1	
83226BD	Race, RE4F04A/4F20E/JF403E Stator (2"OD) (.043")	1	
83226BE	Race, RE4F04A/4F20E/JF403E Stator (2"OD) (.047")	1	
83226BF	Race, RE4F04A/4F20E/JF403E Stator (2"OD) (.051")	1	
83226BG	Race, RE4F04A/4F20E/JF403E Stator (2"OD) (.055")	1	
83226BH	Race, RE4F04A/4F20E/JF403E Stator (2"OD) (.059")	1	
83226BJ	Race, RE4F04A/4F20E/JF403E Stator (2"OD) (.063")	1	
83226BK	Race, RE4F04A/4F20E/JF403E Stator (2"OD) (.067")	1	
83226BL	Race, RE4F04A/4F20E/JF403E Stator (2"OD) (.071")	1	
83226BM	Race, RE4F04A/4F20E/JF403E Stator (2"OD) (.075")	1	
83226BN	Race, RE4F04A/4F20E/JF403E Stator (2"OD) (.079")	1	
83227A	Bearing W/Race, RL4F03A Stator To High Drum (1.845"OD)	1	
83227B	Bearing W/Race, RE4F04A/4F20E/JF403E Stator (1.980"OD)	1	
83229A	Bearing W/Race, RL4F03A High Drum To Hub (1.370"OD)	1	31407-31X11
83229B	Bearing W/Race, RE4F04A/4F20E/JF403E High Drum (1.640"OD)	1	
83232A	Washer, RL4F03A Forward Drum To Rear Support	1	
83232B	Bearing W/Race, RE4F04A/4F20E/JF403E Forward Drum To Case (Does Not Fit 4F20E In A Millenia With Super Charged V6)	1	
83233A	Bearing W/Race, RL4F03A Overrun Hub To Rear Support	1	31407-31X12
83233AB	Bearing W/Race, RL4F03A Overrun Hub To Rear Support	1	31407-31X07
83233AF	Bearing W/Race, JF403E Overrun Hub To Rear Support	1	
83233BA	Bearing W/Race, RE4F04A/4F20E Overrun Hub To Rear Support	1	
83234AA	Race, RL4F03A Overrun Hub Bearing To Rear Support	1	
83234AE	Race, JF403E Overrun Hub Bearing To Rear Support	1	
83235A	Bearing W/Race, RL4F03A High Hub To Sun Shell (2.355"OD)	1	31407-31X01
83235B	Bearing W/Race, RE4F04A/4F20E/JF403E High Hub To Sun Shell (2.745"OD)	1	
83236A	Cup Washer, RL4F03A Sprag (2.810"OD) Bronze	1	
83236B	Cup Washer, RE4F04A/4F20E/JF403E Sprag (3.030"OD) Bronze	1	
83238A	Bearing W/Race, RL4F03A Front Planet To Rear Sun Gear (1.840"OD)	1	31407-31X03
83238B	Bearing W/Race, RE4F04A/4F20E/JF403E Front Planet To Rear Sun Gear (2.00"OD)	1	
83243B	Race, RE4F04A/4F20E/JF403E Shell To Front Planet (4 Tab)	1	
83244A	Bearing W/Race, RL4F03A Sun Shell To Planet (2 5/16"OD)	1	31407-31X02
83244AA	Bearing W/Race, RL4F03V Sunshell To Planet (2.746"OD)	1	
83247A	Bearing W/Race, RL4F03A Rear Sun Gear To Rear Planet (1.675"OD)	1	31407-31X04
83247AE	Bearing W/Race, JF403E (Stays In Planet)	1	
83247B	Bearing W/Race, RE4F04A/4F20E Sun Gear To Planet (1.882"OD)	1	
83251A	Bearing W/Race, RL4F03A Rear Planet To Rear Ring Gear (1.877"OD)	1	31407-31X05
83251AA	Bearing W/Race, RL4F03V Rear Planet To Rear Ring Gear (1.955"OD)	1	
83251BA	Bearing W/Race, RE4F04A/4F20E Rear Planet To Rear Ring Gear (.110" Thick)(1.960"OD) (1.380"ID)(Fits A 4 Gear Rear Planet)	1	
83251BB	Bearing W/Race, RE4F04A/4F20E Rear Planet To Rear Ring Gear (.110"Thick)(2.035"OD) (1.460"ID)(Fits A 5 Gear Rear Planet)	1	
83254A	Washer, RL4F03A Rear Ring Gear To Sprag (3 Tab) (2.335"ID)	1	31508-31X07
83254B	Washer, RE4F04A/4F20E/JF403E Rear Ring Gear To Sprag (3 Tab) (2.530"ID)	1	
83267A	Cup Race, RL4F03A Output Shaft To Rear Support	1	
83268A	Tapered Bearing, RL4F03A Output Shaft To Rear Support	1	
83268AB	Caged Needle Bearing, RL4F03V Output Shaft To Rear Support	1	
83268BB	Caged Needle Bearing, RL4F04A/JF403E/4F20E Output Shaft To Rear Support	1	
83269A	Spacer, RL4F03A Output Shaft To Drive Gear	1	
83270AB	Bearing W/Race, RL4F03V Support To Drive Gear (2.350"OD)	1	
83270AE	Bearing W/Race, JF403E Support To Gear (3.410"OD) (.112")	1	
83270BA	Bearing W/Race, RE4F04A/4F20E Support To Gear (3.410"OD) (.135")	1	
83272BA	Shim, RE4F04A/4F20E Drive Gear Bearing To Case	1	
83276A	Shim, RL4F03A Driven Transfer Gear	1	
83276B	Shim, RE4F04A/4F20E Driven Transfer Gear	1	

© Whatever It Takes Transmission Parts. Inc.

PART #	GASKETS & RUBBER COMPONENTS	QTY.	REFERENCE #
83300A	Gasket, RL4F03A/RL4F03V Bottom Pan (21 Bolt) 1990-Up	1	31397-21X26
83300AAF	Gasket, RE4F03A Bottom Pan (21 Bolt) 2007-Up (Duraprene)	1	
83300B	Gasket, RE4F04A/RE4F04V/4F20E Bottom Pan (21 Bolt) 1992-Up	1	
83300C	Gasket, JF403E Bottom Pan (21 Bolt) 1990-Up	1	
83300D	Gasket, LJ4A-EL Bottom Pan (22 Bolt) (2.3L Millenia) 1995-Up	1	
83304A	Gasket, RL4F03A Side Cover 1990-Up	1	31398-31X02
83311A	O-Ring, RL4F03A/RE4F03A/RE4F03B Pump Body 1990-2013	1	
183311A	O-Ring, RE4F04A/RE4F04B Front Pump 1990-Up	1	31526-31X02
83320B	Gasket, RE4F04A/RE4F04V/4F20E Valve Body (Lower Section Of The Valve Body Assembly) Upper Gasket	1	
83320BK	Gasket Set, RE4F04A/RE4F04V/4F20E Valve Body (4 Gaskets)	1	
83321B	Gasket, RE4F04A/RE4F04V/4F20E Valve Body (Lower Section oOf The Valve Body Assembly) Lower Gasket	1	
83322BA	Gasket, RE4F04A/RE4F04V/4F20E Accumulator Body (Upper Section Of The Valve Body Assembly) Upper Gasket	1	
83322BB	Gasket, RE4F04A/RE4F04V/4F20E Accumulator Body (Upper Section Of The Valve Body Assembly) Lower Gasket	1	
83345A	O-Ring, RL4F03A Governor Cover 1990-Up	1	31526-31X10
83368A	O-Ring, RL4F03A Speed-O Sleeve 1990-Up	1	32710-M8000
83371A	O-Ring, RL4F03A Filler Tube 1990-Up	1	31804-M7500
83373A	O-Ring, RL4F03A T.V. Cable 1990-Up	1	31052-01X00
83379A	O-Ring, RL4F03A Filter 1990-Up	1	31729-21X01

PART #	TECHNICAL MANUALS	QTY.	REFERENCE #
83400A	Technical Manual, RL4F03A/RE4F03A	1	
83400B	Technical Manual, RE4F04A	1	RE4F04A
83400C	Technical Manual, JR403E (GEO Storm, Prism)	1	83-J403ETM
83400D	Technical Manual, 4F20E (Ford Villager)	1	4F20E

PART #	ELECTRICAL COMPONENTS	QTY.	REFERENCE #
83410AA	Neutral Switch, RL4F03A (With 4 Prong Connector)	1	
83410AE	Neutral Switch, JF403E (With Wire Harness) Has A Wire Harness With 2 Connectors (1 Has 8 Prongs And 1 Has 2 Prongs)	1	
83410BA	Neutral Switch, RE4F04A/4F20E (With Wire Harness) Has A Wire Harness With 2 Connectors (1 Has 7 Prongs And 1 Has 2 Prongs)	1	
83420AE	Solenoid Assembly, RL4F03A (Lock-Up & 3-4 Shigt) 1991-92 (Fits 1.6L & 2.0L Sentra 200SX) (Also Infinity G20)	1	
83420AG	Solenoid Assembly, RL4F03A (Lock-Up & 3-4 Shift)(1.6L 1991-94 & 2.0L 1991-92)(2 Solenoids With 20” External Wire Harness)	1	
83420AH	Solenoid Assembly, RL4F03A/RE4F03A (Lock-Up & 3-4 Shift)(1.6L 1995-98) (2 Solenoids No External Wire Harness)	1	
83420AJ	Solenoid Assembly, RE4F03A (2.0L 1993-98) (5 Solenoids With 20” External Wire Harness) (1 O-Ring Per Solenoid)	1	
83420AL	Solenoid Assembly, RE4F03A (1.8L & 2.0L 1999-Up) (5 Solenoids No External Wire Harness) (1 Solenoid Has A Red & White Wire)(2 Solenoids Have 2 O-Rings Each)	1	
83420B	Solenoid Assembly, RE4F04A/4F20E 1992-Up (5 Solenoids With 22” External Wire Harness)(1 O-Ring Per Solenoid)	1	31940-80X005
83420BA	Solenoid Assembly, RE4F04A/RE4F04B/4F20E 2000-Up (5 Solenoids No External Wire Harness, With 7 Prong Case Connector)(1 Solenoid Has 2 Red Wires)(2 Solenoids Have 2 O-Rings Each)	1	
83420G	Solenoid Assembly, LJ4A-EL (5 Solenoids With 7 Wire External Wire Harness)	1	
83436AE	Speed Sensor, JF403E (2 Prong)	1	
83436BA	Speed Sensor, RE4F04A/4F20E (3 Prong)	1	

PART #	HARD PARTS	QTY.	REFERENCE #
83500A	Pump Complete, RL4F03A (11 Teeth On Inner Gear) Aluminum Stator (6 Bolts To Body)	1	
83500AE	Pump Complete, JF403E (9 Teeth On Inner Gear) Cast Iron Stator (8 Bolts To Body) (Stator Shaft Is 2 1/4” Long From Flat Surface To End Of Shaft) (.850”ID Front Bushing)	1	
83500AF	Pump Complete, JF403E (9 Teeth On Inner Gear) Cast Iron Stator (8 Bolts To Body) (Stator Shaft Is 2 3/4” Long From Flat Surface To End Of Shaft) (.925”ID Front Bushing)	1	
83500BA	Pump Complete, RE4F04A/4F20E (11 Teeth On Inner Gear) Aluminum Stator (8 Bolts To Body).	1	
83510A	Pump Body W/Gears, RL4F03A (11 Teeth On Inner Gear) 6 Bolt	1	
83510AE	Pump Body W/Gears, JF403E (9 Teeth On Inner Gear) 8 Bolt (Outer Gear Is 4.125”OD)	1	
83510AF	Pump Body W/Gears, JF403E (9 Teeth On Inner Gear) 8 Bolt (Outer Gear Is 3.570”OD)	1	
83510BA	Pump Body W/Gears, RE4F04A/4F20E (11 Teeth On Inner Gear) 8 Bolt	1	
83520A	Stator, RL4F03A Pump Cover (Aluminum) 6 Bolts To Body	1	

© Whatever It Takes Transmission Parts. Inc.

PART #	HARD PARTS (Continued)	QTY.	REFERENCE #
83520AE	Stator, JF403E Pump Cover (Cast Iron) (Shaft Is 2 1/4” Long From SurfaceTo End Of Shaft) (.850”ID Front Bushing)	1	
83520AF	Stator, JF403E Pump Cover (Cast Iron) (Shaft Is 2 3/4” Long From Surface To End Of Shaft) (.925”ID Front Bushing)	1	
83520BA	Stator, RE4F04A/4F20E Pump Cover (Aluminum) 8 Bolts To Body	1	
83520C	Stator, RE4F04B (Aluminum, 8 Bolts To Body) 2000-Up	1	
83554A	Drum, RL4F03A Forward (30 Teeth Forward Steels) (5 Forward & 3 Overrun Frictions)	1	
83554AE	Drum, RE4F04A/4F20E/JF403E Forward (32 Teeth Forward Steels) (4-5 Forward Frictions & 3 Overrun Frictions)(.510” From Top Of Drum To Top Of Snap Ring Groove)	1	
83554BA	Drum, RE4F04A/4F20E/JF403E Forward (32 Teeth Steels) (5-6 Forward Frictions & 3-4 Overrun Frictions)(.375” From Top Of Drum To Top Of Snap Ring Groove)	1	
83555AA	Drum, RL4F03A High With Shaft (18 Teeth Steels) Converter Splines Are 16mm Long	1	
83555AB	Drum, RL3F03A High With Shaft (18 Teeth Steels) Converter Splines Are 20mm Long	1	
83555AE	Drum, JF403E High With Shaft (28 Teeth Steels) Shaft Is 5 3/8” From Drum To Converter End	1	
83555B	Drum, RE4F04A/4F20E High With Shaft (28 Teeth Steels) (Shaft Is 5 5/8” From Drum To Converter End) (Drum Is 1 7/8” Thick Front To Back)(Uses An Aluminum Piston)	1	
83555BA	Drum, RE4F04A/4F20E High With Shaft (28 Teeth Steels) (Shaft Is 5 5/8” From Drum To Converter End)(Drum Is 1 11/16” Thick Front To Back)(Uses An Aluminum Piston)	1	
83555BB	Drum, RE4F04A/4F20E High With Shaft (28 Teeth Steels) (Shaft Is 5 7/8” From Drum To Converter End)(Drum Is 1 11/16” Thick Front To Back)(Uses An Aluminum Piston)	1	
83555C	Drum, RE4F04B High With Shaft (28 Teeth Steels) Shaft Is 5 5/8” From Drum To Converter End (Drum Is 1 7/8” Thick Front To Back)(Uses Bonded Piston)(Has 3 ID Lands On Shaft Between Bushing Land And Rings) 2000-Up	1	
83556A	Drum, RL4F03A Reverse (2 Clutch) 8 Drive Lugs (1 3/8” Band Surface)	1	
83556AE	Drum, JF403E Reverse (2 Clutch) 30 Drive Lugs (1 9/16” Band Surface)	1	
83556BA	Drum, RE4F04A/4F20E Reverse (2 Clutch) 16 Drive Lugs (1 5/8” Band Surface)(Uses 30 Teeth Steels # 130) 1990-Up	1	
83556BB	Drum, RE4F04B/4F20E Reverse (2 Clutch)(16 Drive Lugs)(1 5/8” Wide Band Surface)(Uses 32 Teeth Steels # 130) 2000-Up	1	
83564A	Piston Kit, RL4F03A Forward & Overrun Clutch	1	
83564AE	Piston Kit, RE4F04A/4F20E/JF403E Forward & Overrun Clutch (Overrun Piston Is .950” Thick)	1	
83564B	Piston Kit, RE4F04A/4F20E/JF403E Forward & Overrun Clutch	1	
83564BA	Piston Kit, RE4F04A/4F20E/JF403E Forward & Overrun Clutch (Overrun Piston Is .900” Thick)	1	
83565AA	Piston Kit, RL4F03A High Clutch (Piston Is 3.992”OD)	1	
83565BA	Piston Kit, RE4F04A/4F20E/JF403E High Clutch (Piston Is 4.150”OD)	1	
83565C	Piston Kit, RE4F04B High Clutch (Piston Is 3.900”OD With Bonded Rubber) 2000-Up	1	
83566A	Piston Kit, RL4F03A Reverse Clutch (16 Springs)	1	
83566BA	Piston Kit, RE4F04A/4F20E/JF403E Reverse Clutch	1	
83567A	Piston Kit, RL4F03A Low/Reverse Clutch	1	
83567B	Piston Kit, RE4F04A/4F20E/JF403E Low/Reverse Clutch	1	
83574AA	Clutch Hub, RL4F03A Forward Clutch (With .685” Thick Outer Race) 2.810”ID	1	
83574AB	Clutch Hub, RL4F03A Forward Clutch (With .755” Thick Outer Race) 2.810”OD	1	
83574AE	Clutch Hub, JF403E Forward Clutch (With .725” Thick Outer Race) 3.032”ID	1	
83574BA	Clutch Hub, RE4F04A/4F20E Forward Clutch (With .847” Thick Outer Race)(3.032”ID) (1.646” Tall)	1	
83574BB	Clutch Hub, RE4F04A/4F20E Forward Clutch (With .847” Thick Outer Race)(3.032”ID) (1.871” Tall)	1	
83575AA	Clutch Hub, RL4F03A High Clutch (20 Teeth) 3 3/8”OD (.170” Wide Teeth On Frictions)	1	
83575AB	Clutch Hub, RL4F03A High Clutch (20 Teeth) 3 3/8”OD (.265” Wide Teeth On Frictions)	1	
83575AE	Clutch Hub, JF403E High Clutch (20 Teeth) 3 5/8”OD	1	
83575BA	Clutch Hub, RE4F04A High Clutch (24 Teeth) (2.720” Tall) (3 1/2”OD)	1	
83575BB	Clutch Hub, RE4F04A High Clutch (24 Teeth) (2.865” Tall) (3 1/2”OD)	1	
83575D	Clutch Hub, 4F20E High Clutch (21 Teeth) 3 1/2”OD	1	
83579AA	Clutch Hub, RL4F03A Overrun (18 Lug) With 5 Humps On Back For Bearing	1	
83579AB	Clutch Hub, RL4F03A Overrun (18 Lug) (Takes A 1 Piece Bearing #233)	1	
83579BA	Clutch Hub, RE4F04A/4F20E/JF403E Overrun (20 Lug)	1	
83582A	Planet, RL4F03A Front (29 Teeth Sun Gear)	1	
83582BA	Planet, RE4F04A/4F20E/JF403E Front (33 Teeth Sun Gear)(3 Gear)(Use 83583AA)	1	
83582BB	Planet, RE4F04A/4F20E Front (33 Teeth Sun Gear)(4 Gear)(Use 83583AB)	1	
83583A	Planet Kit, RL4F03A (With 36 Teeth Sun Gear) (Contains: #622 & From # 582 to # 594) (Uses A 83594AA With .840” Tall Sprag Race)(We Leave Out Bushing #052 For Added Lube Per ATRA)	1	
83583AA	Planet Kit, RE4F04A/RE4F04V/4F20E/JF403E/LJ4A-EL (42 Teeth Sun Gear) (Contains: #622 & From #582 to #595)(With 3 Gear Front & 4 Gear Rear Planet) (We Leave Out Bushing #052 For Added Lube Per ATRA)(Uses 84594BA)	1	
83583AB	Planet Kit, RE4F04A/RE4F04B/4F20E (42 Teeth Sun Gear)(Contains: #622 & From #582 to # 594) (With 4 Gear Front & 5 Gear Rear Planet)(We Leave Out Bushing #052 For Added Lube Per ATRA)(Uses 83594BB)	1	

© Whatever It Takes Transmission Parts. Inc.

83583AC.....Planet Kit, RE4F04A/4F20E (42 Teeth Sun Gear)(Contains: #622 & From #582 to #594) .....(With 4 Gear Front & 4 Gear Rear Planet)(We Leave Out Bushing #052 For Added Lube .....Per ATRA)(Uses 83594BA).....1 .....
83583AE.....Sprag Kit, JF403E (With 37 Teeth Sun Gear) (Contains: #622 & From #582 to #594) (We Leave .....Out Bushing #052 For Added Lube Per ATRA).....1 .....
83583AF.....Planet Kit, JF403E/LJ4AEL (42 Teeth Sun Gear)(Contains: #622 And From #582 To #594) .....(With 3 Gear Front & 4 Gear Rear Planet)(We Leave Out Bushing #052 For Added Lube .....“Per ATRA”)(Uses 83594AE).....1 .....
83584A.....Planet, RL4F03A Rear With Ring Gear (36 Teeth Sun Gear).....1 .....
83584AE.....Planet, JF403E Rear With Ring Gear (37 Teeth Sun Gear).....1 .....
83584BA.....Planet, RE4F04A/4F20E Rear With Ring Gear (42 Teeth Sun Gear)(4 Gear)(1.355”OD Where .....Bushing #060 Rides)(Use 83583AA).....1 .....
83584BB.....Planet, RE4F04A/4F20E Rear With Ring Gear (42 Teeth Sun Gear)(5 Gear)(1.435”OD Where .....Bushing #060 Rides)(Use 83583AB).....1 .....
83594AA.....Ring Gear, RL4F03A Rear (2.155”OD) .840” Tall Sprag Race.....1 .....
83594AB.....Ring Gear, RL4F03A Rear (2.155”OD) .905” Tall Sprag Race.....1 .....
83594AE.....Ring Gear, JF403E Rear (2.375”OD) .870” Tall Sprag Race.....1 .....
83594BA.....Ring Gear, RE4F04A/4F20E Rear (2.375”OD)(.980” Tall Sprag Race)(Bushing #060 Is 1.355”ID)1 .....
83594BB.....Ring Gear, RE4F04A/4F20E Rear (2.375”OD)(.980” Tall Sprag Race)(Bushing #060 Is 1.435”ID)1 .....
83614A.....Sun Gear, RL4F03A Rear (36 Teeth).....1 .....
83614AE.....Sun Gear, JF403E Rear (37 Teeth).....1 .....
83614BA.....Sun Gear, RE4F04A/4F20E Rear 42 Teeth).....1 .....
83622A.....Shell, RL4F03A Sun Gear (29 Teeth) 8 Drive Lugs.....1 .....
83622AE.....Shell, JF403E Sun Gear (33 Teeth) 30 Drive Lugs.....1 .....
83622BA.....Shell, RE4F04A/4F20E Sun Gear (33 Teeth) 16 Drive Lugs.....1 .....
83630AE.....Housing, JF403E Low/Reverse Piston.....1 .....
83630BA.....Housing, RE4F04A/4F20E Low/Reverse Piston.....1 .....
83634AA.....Support, RL4F03A Rear (Tapered Bearing Type #268) 5 Bolt.....1 .....
83634AB.....Support, RL4F03A Rear (Caged Needle Bearing Type #268) 5 Bolt.....1 .....
83634AE.....Support, JF403E Rear (Caged Needle Bearing Type #268) 6 Bolt (Has 23 Needles In .....Bearing).....1 .....
83634BA.....Support, RE4F04A/4F20E Rear (Caged Bearing Type # 268) 6 Bolt (Has 17 Needles .....In Bearing).....1 .....

PART #	SPRAGS & ONE WAY CLUTCHES	QTY.	REFERENCE #
83642A	Sprag Assembly, RL4F03A Low With Outer Race (15 Rollers) .605” Overall Thickness	1	31473-31X00
83642AA	Sprag Assembly, RL4F03A Low With Outer Race (15 Rollers) .690” Overall Thickness	1	
83642AB	Sprag Assembly, RL4F03A Low With Outer Race (19 Rollers)	1	31473-31X03
83642B	Sprag Assembly, RE4F04A/4F20E/JF402E Low With Outer Race (18 Roller)	1	
83658AA	Sprag, RL4F03A Forward (24 Lug) .387” Wide Lugs	1	31484-31X00
83658AB	Sprag, RL4F03A Forward (24 Lug) .465” Wide Lugs	1	31484-31X01
83658AE	Sprag, JF403E Forward (27 Lug) .410” Wide Lugs	1	
83658BA	Sprag, RE4F04A/4F20E Forward (27 Lug) .530” Wide Lugs	1	31484-80X00

PART #	HARD PARTS (Continued)	QTY.	REFERENCE #
83678A	Output Shaft With Bearing, RL4F03A (less Drive Gears)	1	
83680A	Governor, RL4F03A Assembly (16 Teeth)	1	
83684A	Governor Gear, RL4F03A (16 Teeth)	1	
83686A	Cover, RL4F03A Governor (Tin)	1	
83688A	Spacer, RL4F03A Under Governor Cover Snap Ring	1	
83710AA	Gear, RL4F03A Drive Transfer (52 Teeth) With Bearing Less Output Shaft	1	
83710AB	Gear, RL4F03A Drive Transfer (52 Teeth) With Bearing & Output Shaft	1	
83710AE	Gear, JF403E Drive Transfer (59 Teeth) With Bearing & Output Shaft	1	
83710BA	Gear, RE4F04A/4F20E Drive Transfer (46 Teeth)(With Bearing & Output Shaft)	1	
83710BB	Gear, RE4F04A/4F20E Drive Transfer (42 Teeth)(With Bearing & Output Shaft)	1	
83712A	Gear, RL4F03A Driven Transfer (55 Teeth) With Bearing	1	
83712AE	Gear, JF403E Driven Transfer (53 Teeth) With Bearing	1	
83712BA	Gear, RE4F04A//4F20E Driven Transfer (45 Teeth) With Bearing	1	
83713A	Retainer, RL4F03A (Pinion Bearing) 4 Bolt Cast Iron	1	
83713AE	Retainer, JF403E (Pinion Bearing) 8 Bolt Cast Iron	1	
83713B	Retainer, RE4F04A/4F20E (Pinion Bearing) 8 Bolt Cast Iron	1	
83715A	Differential, RL4F03A (76 Teeth) 3 Groove (Tapered Bearings) 41 Teeth Speed-O	1	
83715AA	Differential, RL4F03A (76 Teeth) 3 Groove (With Ball Bearings) 41 Teeth Speed-O	1	
83715AAB	Differential, RL4F03A (76 Teeth) 1 Groove (With Ball Bearings) 41 Teeth Speed-O	1	
83715AAC	Differential, RL4F03A (76 Teeth) No Groove (Tapered Bearings) 41 Teeth Speed-O	1	
83715AB	Differential, RL4F03A (77 Teeth) 1 Groove (With Tapered Bearings) 41 Teeth Speed-O	1	
83715ABC	Differential, RE4F03V/RE4F04V (77 Teeth) 1 Groove (With viscous) 14 Bolt Ring Gear (21 Rollers On Bearing On Housing Side / 40 Rollers On Ring Gear Side)	1	

© Whatever It Takes Transmission Parts. Inc.

PART #	HARD PARTS (Continued)	QTY.	REFERENCE #
83715AC	Differential, RL4F03A (74 Teeth) No Groove (With Ball Bearings) 41 Teeth Speed-O	1	
83715AE	Differential, JF403E (76 Teeth) 2 Groove (With Tapered Bearings) 35 Teeth Speed-O	1	
83715AM	Differential, RE4F03V/ RE4F04V (76 Teeth) 3 Groove (With Viscous) 14 Bolt Ring Gear (21 Rollers On Bearing On Housing Side) 40 Rollers On Ring Gear Side	1	
83715AV	Differential, RE4F03V/RE4F04V (74 Teeth) 1 Groove (With Viscous) 16 Bolt Ring Gear	1	
83715BA	Differential, RE4F04A (74 Teeth) No Groove (With Tapered Bearings) 41 Teeth Speed-O	1	
83715BF	Differential, 4F20E (75 Teeth) 1 Groove (With Tapered Bearings) 41 Teeth Speed-O	1	
83715CA	Differential, RL4F03A (66 Teeth) 2 Groove (With Tapered Bearings) 41 Teeth Speed-O	1	
83715CB	Differential, RL4F03A (66 Teeth) 3 Grooves (With Ball Bearings) 41 Teeth Speed-O	1	
83715DA	Differential, RL4F03A (67 Teeth) 2 Grooves (With Tapered Bearings) 41 Teeth Speed-O	1	
83715EA	Differential, 4F20E (72 Teeth) No Groove (With Tapered Bearings) 25 Teeth Speed-O	1	
83730AA	Pinion, RL4F03A (21 Teeth) 3 Groove (With 17 Teeth Governor Drive Gear)	1	
83730AB	Pinion, RL4F03A (20 Teeth) 3 Groove (With 17 Teeth Governor Drive Gear)	1	
83730AE	Pinion, JF403E (17 Teeth) No Groove	1	
83730BA	Pinion, RE4F04A (20 Teeth) No Groove	1	
83730BB	Pinion, RE4F04A (20 Teeth) 3 Groove (12 Teeth Electric Pick-Up)	1	
83730BF	Pinion, 4F20E (19 Teeth) 1 Groove	1	
83740AA	Valve Body, RL4F03A (2 Solenoids) With 11” Wire Harness	1	38440-M3000
83740AB	Valve Body, RL4F03A (2 Solenoids) With 31” Wire Harness	1	
83740AC	Valve Body, RE4F03A (5 Solenoid, 1 On Opposite End)(The 7 Wire Harness Is Made Into The Grommet That Seals Into The Case, It Passes Through Connector)(Fits Sentra 1993-99, 200SX 1995-98, And Infinity G20 1994-99)	1	
83740AD	Valve Body, RE4F03B (5 Solenoids, 1 On Opposite End)(The 7 Wore Harness Unplugs From The Case Connector)(Fits Sentra 2000-06, Infinity G20 2000-02)	1	
83740AE	Valve Body, JF403E (5 Solenoids On 1 Corner) With 19” Wire Harness	1	
83740AF	Valve Body, JF403E (5 Solenoids On 1 Corner) With 34” Wire Harness	1	
83740BA	Valve Body, RE4F04A/RE4F04V/4F20E (5 Solenoids, 1 On Opposite End) The 7 Wire Harness Is Made Into The Grommet That Seals Into Case, It Is A Pass Thru Wire Harness (Fits Altima 1993-99, Maxima 1992-99, Maxima SL 2004, Quest 1993-02, Quest S 2004-06, Quest SL 204, Infinity i30 1993-99, And Mercury Villager 1993-02)	1	
83740BC	Valve Body, RE4F04B (5 Solenoids, 1 On Opposite End) The 7 Wire Harness Unplugs From The Case Connector (Fits Altima 2000-06, Maxima 2000-03, Sentra SE-R 2.5L 2000-06, Infinity i30 2000-01, And Infinity i35 2002)	1	

PART #	VALVE BODY COMPONENTS	QTY.	REFERENCE #
S83741AS-1K	Valve Kit, RE4F04A/4F20E 1-2 Accumulator Shift (Valve, O-Ring, End Plug & 2 Springs) (Sonnax)(Must Use T-63940-BST)(Does Not Fit 2000-Up Maxima Or Any 2002-Up)	1	
T-63940-BST	Bore Sizing Tool, For S83741AS-1K (Sonnax)	1	
S83741BS-1K	Valve Kit, RE4F04A/4F20E Accumulator Shift (Valve, O-Ring & Spring) (Sonnax)	1	63940-03K

PART #	HARD PARTS (Continued)	QTY.	REFERENCE #
83750A	Bell Housing, RL4F03A (Cast # MC2)	1	
83750AA	Bell Housing, RL4F03A (Cast # MCV) Top Bolts 4 3/8”	1	
83750AB	Bell Housing, RL4F03A (Cast # CB2) Top Bolts 6”	1	
83750AE	Bell Housing, JF403E (Top Bolts Are 5”)	1	
83750BA	Bell Housing, RE4F04A (Cast # ZY-TA) Top Bolts 4 1/2”	1	
83750BC	Bell Housing, RE4F04A (Cast # ZY-ZV) Top Bolts 3”	1	
83750BF	Bell Housing, 4F20E (Cast # ZY-VG #1) Top Bolts Are 4 3/8” (Has No Crank Sensor)	1	
83750BG	Bell Housing, 4F20E (Cast # ZY-VG #2 or #3) Top Bolts Are 4 3/8” (With Crank Sensor At 2:00)	1	
83750BH	Bell Housing, 4F20E (Cast # Z-TR2)(Top Boolts 6 3/8”)(STarter At 11:00)	1	
83759AA	Rear Cover, RL4F03A (Tin)	1	
83759AB	Rear Cover, RL4F03A (Aluminum) Cast # AY2 #2-A	1	
83759AE	Rear Cover, JF403E (Aluminum) Cast # AK #1	1	
83759AF	Rear Cover, JF403E (Aluminum) Cast # 214056	1	
83759BA	Rear Cover, RE4F04A/4F20E (Aluminum) Cast # ZY #1-A (Also Cast # ZY #7)	1	
83759BB	Rear Cover, RE4F04A/4F20E (Aluminum) Cast # ZY #2-A	1	
83760	Case, RL4F03A (Cast # AY-1 #2) Takes A Tin Rear Cover	1	
83760A	Case, RL4F03A (Cast # AY-1 #4) Takes A Tin Rear Cover	1	
83760AA	Case, RL4F03A (Cast # AY-1 #9) Takes A Tin Rear Cover	1	
83760AB	Case, RL4F03A (Cast # AY-2 #5) Takes An Aluminum Rear Cover	1	
83760AE	Case, JF403E (Takes Aluminum Rear Cover) Shift Lever On Top	1	
83760BA	Case, RE4F04A/RE4F04V (Takes Aluminum Rear Cover) Has 2 Bolt Holes For Low/Reverse Clutch Apply Tube (Has No Sensor On The Servo Side Of The Case By The Rear Cover) (Servo Bore Is 3.150”ID)	1	
83760BB	Case RE4F04A/RE4F04V (Takes Aluminum Rear Cover)(Has 2 Bolt Holes For Low/Reverse Clutch Apply Tube)(Has A Sensor On The Servo Side Of The Case By The Rear Cover)		

© Whatever It Takes Transmission Parts. Inc.

	(Servo Bore Is 3.150”ID)	1	
83760BC	Case, RE4F04A/RE4F04V (Takes Aluminum Rear Cover)(Has 2 Bolt Holes For Low/Reverse		
	Clutch Apply Tube)(Has a Sensor On The Servo Side Of The Case By The Rear Cover)		
	(Servo Bore Is 2.993”ID)	1	
83760BF	Case, 4F20E (Takes Aluminum Rear Cover) Has 3 Bolt Holes For Low/Reverse Clutch		
	Apply Tube (But Only Uses 2 Holes)	1	
83765AA	Pan, RL4F03A Bottom (Shallow)	1	
83765AE	Pan, JF403E Bottom (12 Bolt Holes) 1990-95	1	
83765AF	Pan, JF403E Bottom (22 Bolt Holes) 1995-Up	1	
83765BA	Pan, RE4F04A/4F20E Bottom (1.980” Deep At 1 End)	1	
83765BB	Pan, RE4F04A/RE4F04V/4F20E Bottom (1.550” Deep In Center)(21 Bolts)	1	
83765BC	Pan, RE4F04A/4F20E Bottom (2.385” Deep In Center)	1	
83790AK	Bolt Set, RL4F03A/RE4F03A/4F20E Rear Support To Case	1	
83796AA	Nut, RL4F03A Holds Driven GearTo Pinion	1	
83796AE	Nut, JF403E Holds Driven Gear To Pinion	1	
83796BA	Nut, RE4F04A/4F20E holds Driven Gar To Pinion	1	
83847A	Gear, RL4F03A Speed-O Drive (41 Teeth) 5/8” Thick	1	32701-31X00
83847B	Gear, RL4F03A Speed-O Drive (41 Teeth) 1/2” Thick	1	32701-80X00
83851A	Steel, RL4F03A Dished Overrun Clutch (3 Lug)	1	
83851AE	Cushion, RE4F04A/4F20E/JF403E Overrun (Dished)(No Lugs)(5.025”OD)(4.510”ID)	1	
83851B	Steel, RE4F04A/4F20E/JF403E Overrun (Dished)(4 Lugs)(2 Per Set)(5.450”OD At Lugs)		
	(4.500”ID)	1	
83853A	Cushion Spring, RL4F03A Forward Clutch (5”OD)	1	
83853B	Cushion Spring, RE4F04A/4F20E/JF403E Forward (5 1/2”OD)	1	
83857A	Cushion Spring, RL4F03A Low/Reverse Clutch (4 Lug) (5.500”ID)	1	
83857AA	Cushion Spring, RL4F03A Low/Reverse Clutch (5 Lug) (5.965”ID)	1	
83857B	Cushion Spring, RE4F04A/4F20E/JF403E Low/Reverse Clutch (No Lug) (5.965”ID)	1	
83863A	Snap Ring, RL4F03A Holds Overrun Pressure Plate In	1	
83863B	Snap Ring, RE4F04A/4F20E/JF403E Holds Overrun Pressure Plate In	1	
83876A	Snap Ring, RL4F03A Holds Forward Pressure Plate In	1	
83876B	Snap Ring, RE4F04A/4F20E/JFR403E Holds Forward Pressure Plate In	1	
83877A	Snap Ring, RL4F03A/RE4F04A/4F20E/JF403E Holds Front Clutch Retainer In	1	
83878A	Snap Ring, RL4F03A Holds High Clutch Pressure Plate In	1	
83878B	Snap Ring, RE4F04A/4F20E/JF403E Holds High Pressure Plate In	1	
83879A	Snap Ring, RL4F03A/RL4F04A/JF403E/4F20E holds High Clutch Retainer In	1	
83882A	Snap Ring, RL4F03A Holds Low Sprag In Case	1	
83882B	Snap Ring, RE4F04A/4F20E/JF403E Holds Low Sprag In Case	1	
83883A	Snap Ring, RL4F03A Holds Low/Reverse Pressure Plate In	1	
83883B	Snap Ring, RE4F04A/4F20E/JF403E Holds Low/Reverse Pressure Plate In	1	
83885A	Snap Ring, RL4F03A Holds Low/Reverse Clutch Retainer In	1	
83885B	Snap Ring, RL4F04A/JF403E/4F20E Holds Low/Reverse Clutch Retainer In	1	
83889A	Snap Ring, RL4F03A Holds Overrun Hub To Rear Ring Gear	1	
83892A	Snap Ring, RL4F03A holds Reverse Pressure Plate In	1	
83892B	Snap Ring, RE4F04A/4F20E/JF403E Holds Reverse Pressure Plate In	1	
83893A	Snap Ring, RL4F03A Holds Reverse Clutch Retainer In	1	
83893BA	Snap Ring, RL4F04A/JF403E/4F20E Holds Reverse Clutch Retainer In	1	
83894B	Snap Ring, RL4F04A/JF403E/4F20E Holds Bearing In Rear Support	1	
83896A	Snap Ring, RL4F03A Holds Servo Cover In	1	
83897A	Snap Ring, RL4F03A Holds Governor Cover On	1	
83900AA	Servo Assembly, RL4F03A (2.505”OD Piston)	1	
83900AB	Servo Assembly, RL4F03A (2.425”OD Piston)	1	
83900AE	Servo Assembly, JF403E (2.505”OD Piston) 3.390”OD Cover	1	
83900BA	Servo Assembly, RE4F04A (2.510”OD Piston) With Bolt On Cover	1	
83900BB	Servo Assembly, RE4F04A (2.665”OD Piston) With Bolt On Cover	1	
83900BF	Servo Assembly, 4F20E (2.585”OD Piston) With Bolt On Cover	1	
83901AA	Spring, RL4F03A Servo	1	
83901AE	Spring, JF403E Servo	1	
83901BA	Spring, RE4F04A Servo	1	
83901BF	Spring, 4F20E Servo	1	
83902AA	Sleeve, RL4F03A Servo	1	
83902AE	Sleeve, JF403E Servo	1	
83902BA	Sleeve, RE4F04A Servo	1	
83902BF	Sleeve, 4F20E Servo	1	
83903AA	Piston, RL4F03A Servo (2.505”OD)	1	
83903AB	Piston, RL4F03A Servo (2.425”OD)	1	
83903AE	Piston, JF403E Servo (2.505”OD)	1	
83903BA	Piston, RE4F04A Servo (2.510”OD)	1	
83903BF	Piston, 4F20E Servo (2.585”OD)	1	
83904AA	Cover, RL4F03A Servo (2.505”OD Piston)	1	
83904AB	Cover, RL4F03A Servo (2.425”OD Piston)	1	

© Whatever It Takes Transmission Parts. Inc.

PART #	HARD PARTS (Continued)	QTY.	REFERENCE #
83904AE	Cover, JF403E Servo	1	
83904BA	Cover, RE4F04A Servo	1	
83904BF	Cover, 4F20E Servo	1	
83930AA	3rd Accumulator Assembly, RL4F03A (Plastic Piston)	1	
83930AE	3rd Accumulator Assembly, JF403E (Plastic Piston)	1	
83930BA	3rd Accumulator Assembly, RE4F04A/4F20E (Plastic Piston)	1	
83950AA	Neutral Drive Accumulator Assembly, RL4F03A (Plastic Piston)	1	
83950AE	Neutral Drive Accumulator Assembly, JF403E (Aluminum Piston)	1	
83950BA	Neutral Drive Accumulator Assembly, RE4F04A/4F20E (Plastic Piston)	1	
83960A	Piston, RL4F03A Overrun Clutch	1	
83960B	Piston, RL4F04A/JF403E/4F20E Overrun Clutch	1	
83960CK	Piston Kit, RE4F04B (Bonded) 2000-Up	1	
83964A	Piston, RL4F03A Forward Clutch	1	
83964B	Piston, RL4F04A/JF403E/4F20E Forward Clutch	1	
83965A	Piston, RL4F03A High Clutch	1	
83965B	Piston, RL4F04A/JF403E/4F20E High Clutch	1	
83965C	Piston, RE4F04B High Clutch (3.900”OD)(Bonded) 2000-Up	1	
83966A	Piston, RL4F03A Reverse Clutch	1	
83966BA	Piston, RL4F04A/JF403E/4F20E Reverse Clutch	1	
83967A	Piston, RL4F03A Low/Reverse Clutch	1	
83967B	Piston, RL4F04A/JF403E/4F20E Low/Reverse Clutch	1	
83974A	Retainer, RL4F03A Forward Clutch Return Spring	1	
83974B	Retainer, RL4F04A/JF403E/4F20E Forward Clutch Return Spring	1	
83975A	Spring, RL4F03A High Clutch Return	10	
83975B	Spring, RL4F04A/JF403E/4F20E High Clutch Return	10	
83975C	Springs/Retainer, RE4F04B High Clutch Return (18 Springs) 2000-Up	1	
83976A	Springs W/Retainer, RL4F03A Reverse Clutch Return	1	
83976BA	Spring, RL4F04A/JF403E/4F20E Reverse Clutch Return	1	
83977A	Springs W/Retainer, RL4F03A Low/Reverse Clutch Return	1	
83977B	Springs W/Retainer, RL4F04A/JF403E/4F20E Low/Reverse Clutch Return	1	
83985A	Retainer, RL4F03A High Clutch Return Spring	1	
83985B	Retainer, RL4F04A/JF403E/4F20E High Clutch Return Spring	1	
83985C	Retainer/Piston, RE4F04B High Clutch Spring (Bonded) 2000-Up	1	
83986BA	Retainer, RL4F04A/JF403E/4F20E Reverse Clutch Return Spring	1	
83995AA	Park Pawl Assembly, RL4F03A	1	
83995AE	Park Pawl Assembly, JF403E	1	
83995BA	Park Pawl Assembly, RE4F04A/4F20E	1	
83999AA	Oil Tube Assembly, RL4F03A	1	
83999AE	Oil Tube Assembly, JF403E	1	
83999BA	Oil Tube Assembly, RE4F04A/4F20E	1	

© Whatever It Takes Transmission Parts. Inc.

© Whatever It Takes Transmission Parts. Inc.

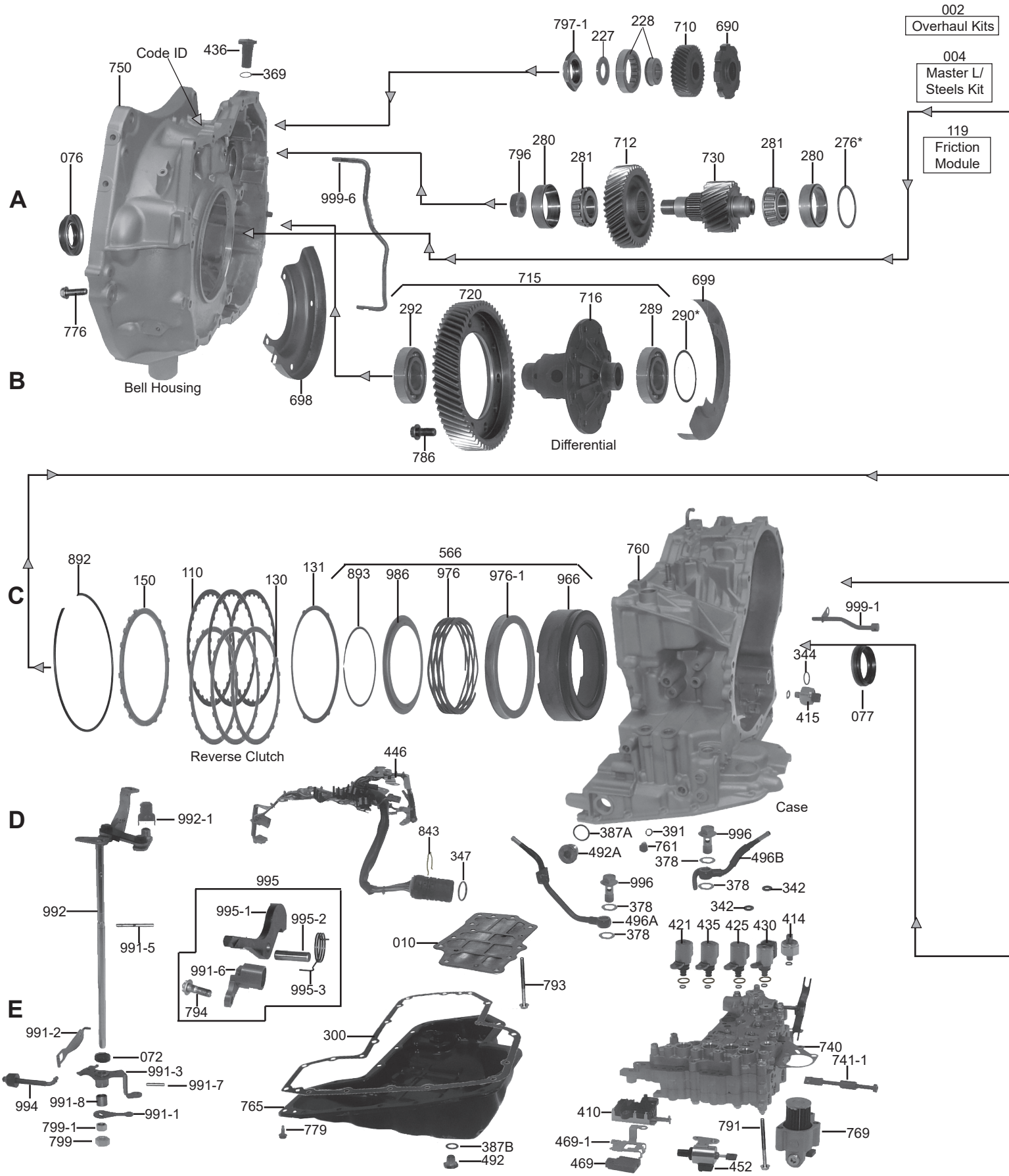

© Whatever It Takes Transmission Parts. Inc.

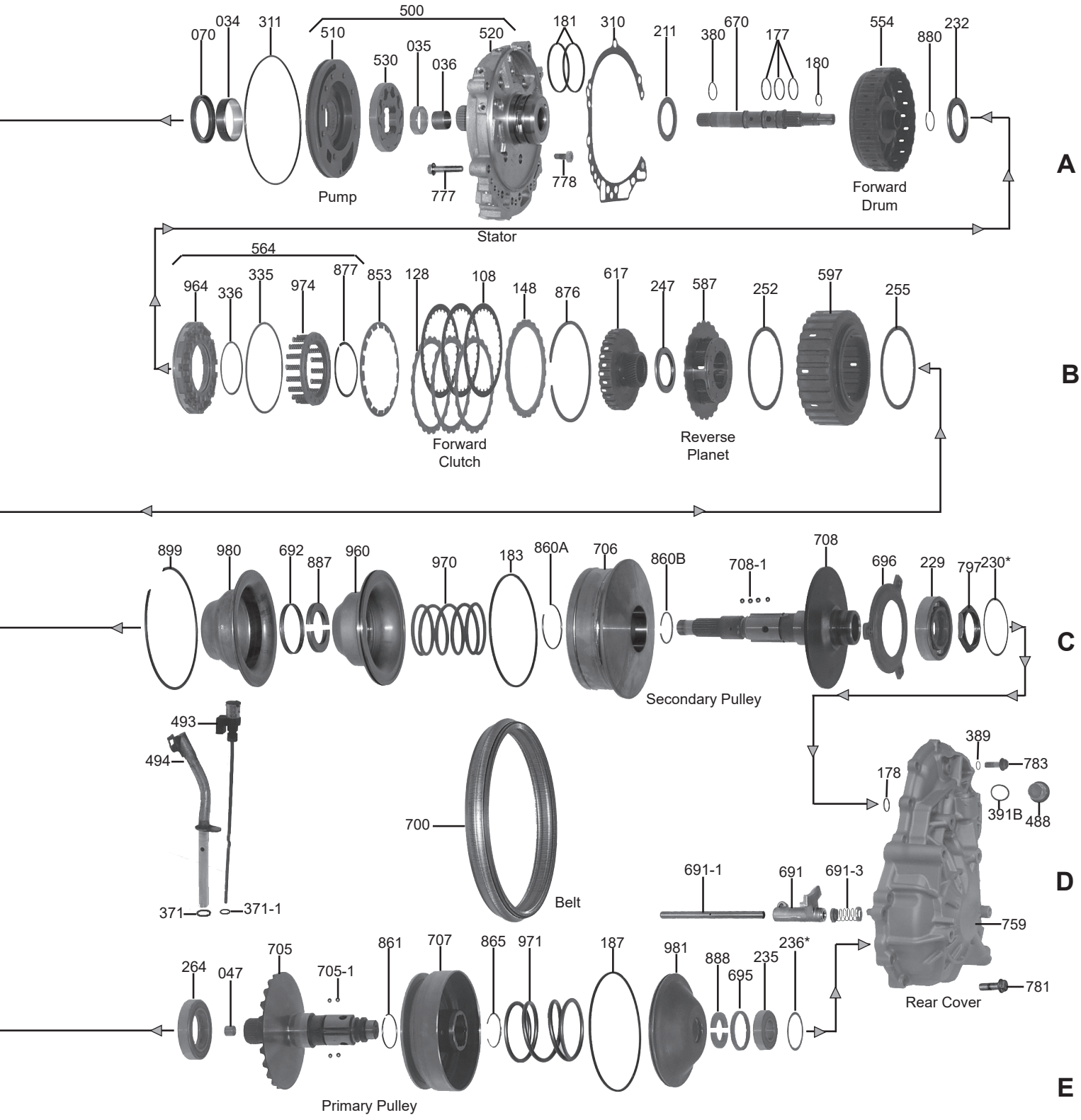

© Whatever It Takes Transmission Parts. Inc.

RE0F08B (JF009E)(1XC6B / 1XC6C)

FWD CVT

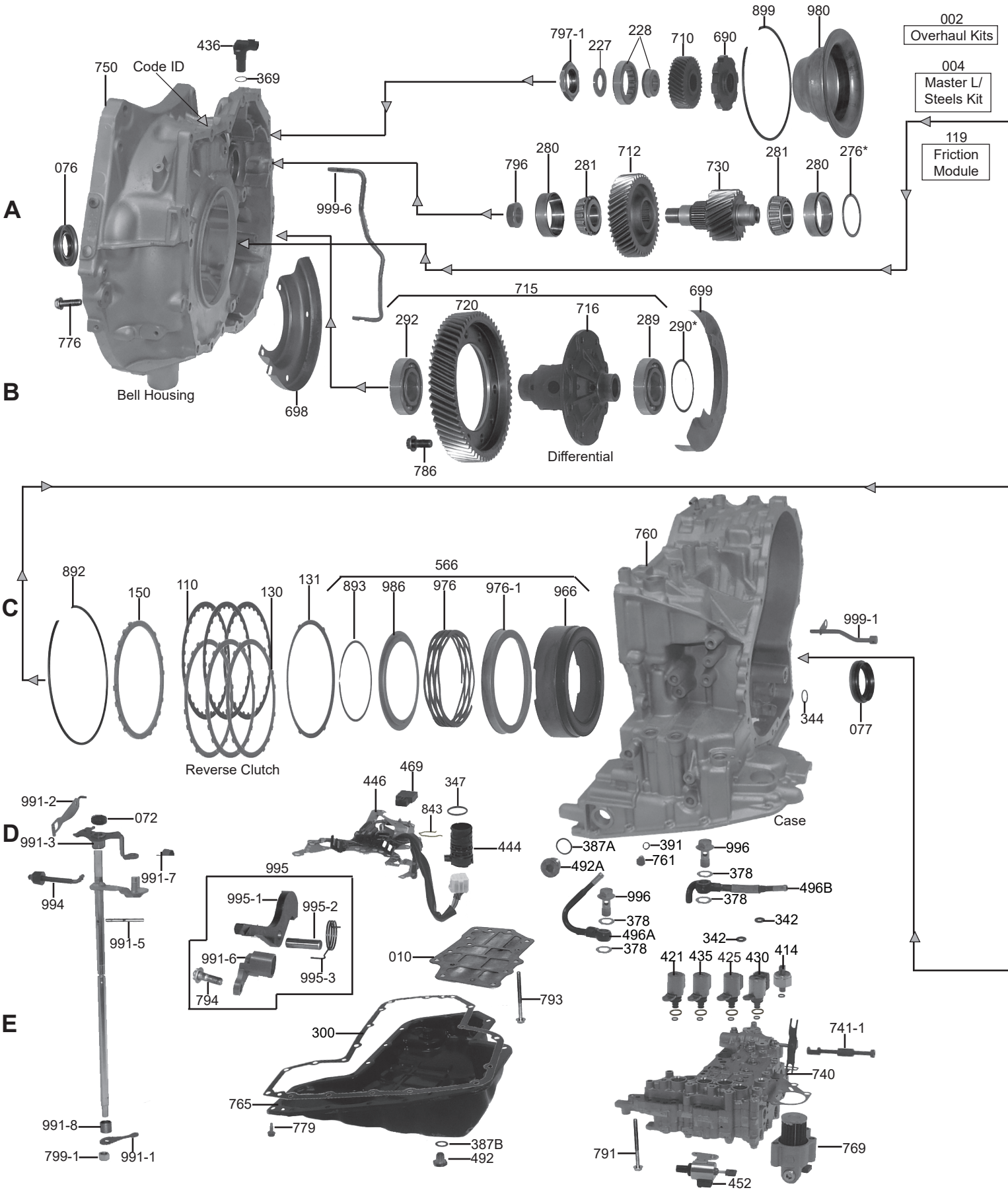

NISSAN

© Whatever It Takes Transmission Parts. Inc.

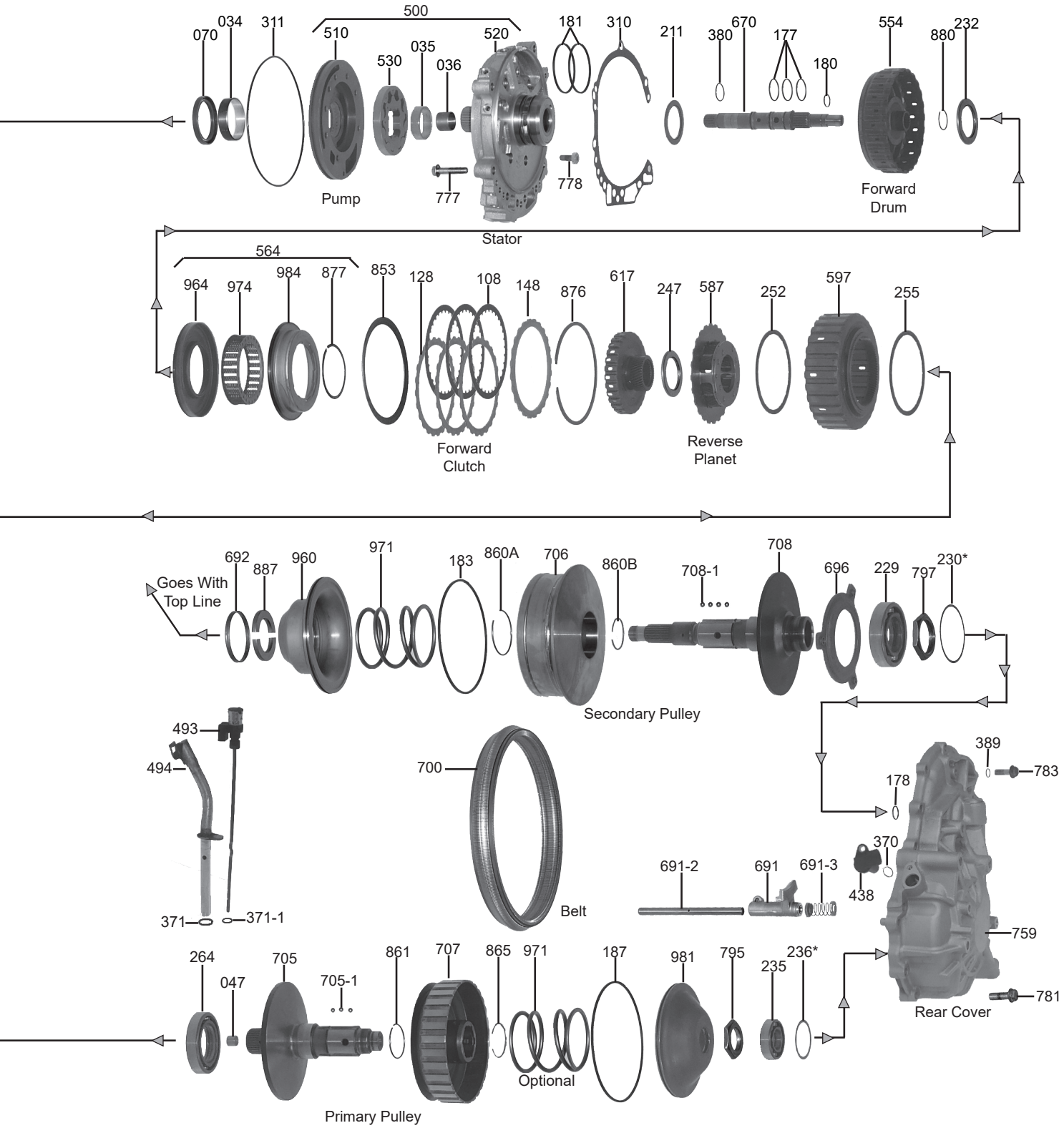

NISSAN

© Whatever It Takes Transmission Parts. Inc.

PART #	OVERHAUL KITS	QTY	REFERENCE #
243002AF	Overhaul Kit, RE0F08A/F08B (JF009E) 2002-Up	1	

PART #	MASTER L/STEELS KITS	QTY	REFERENCE #
243004AF	Master L/Steels Kit, RE0F08A (JF009E) 2002-Up	1	

PART #	FILTERS	QTY	REFERENCE #
243010A	Filter, RE0F08A/RE0F08B (JF009E) (Rectangular Pick Up) 2007-Up	1	

PART #	BUSHINGS	QTY	REFERENCE #
343030A	Bushing Kit, RE0F08A/F08B (JF009E) 2002-Up	1	
243034A	Bushing, RE0F08A/F08B (JF009E) (Babbitt)(Oil Pockets)(1.805”ID) (.415”Wide) 2007-Up	1	
243035A	Bushing, RE0F08A/F08B (JF009E) (Inner Gear)(1.420”OD)(.395”Wide) (1.240”ID)(Babbitt) 2007-Up	1	
243036A	Bushing, RE0F08A/F08B (JF009E) Stator (Front)(.815”ID)(.940”OD) (.415”Wide) 2007-Up	1	
333047A	Bushing, RE0F08A/F08B (JF009E) Priamry Pulley To Input Shaft (Bronze)(.550”ID)(.540”Long) 2007-Up	1	

PART #	METAL CLAD SEALS	QTY	REFERENCE #
243070A	Seal, RE0F08A/RE0F08B (JF009E) Pump 2007-Up	1	
60072	Seal, RE0F08A/F08B Manual Shaft (.275”Thick)(.875”OD)(In Bell Housing)	1	
243076A	Use 83076A	1	
83076A	Seal, RE0F08A (JF009E) Bell Housing Side 2007-Up	1	
243077A	Use 83076AA	1	
83076AA	Seal, RE0F08A (JF009E) Axle Case Side 2002-Up	1	

PART #	FRICTIONS	QTY	REFERENCE #
243108A	Friction, RE0F08A/F08B (JF009E) Forward Clutch (30 Teeth)(4.895”OD)(.065”Thick) 2007-Up	3	
243110A	Friction, RE0F08A/F08B (JF009E) Reverse Clutch (.065”Thick)(30 Teeth)(6.520”ID) 2007-Up	3	
243119A	Friction Module, RE0F08A/F08B (JF009E/JF012E) 2007-Up	1	

PART #	STEELS	QTY	REFERENCE #
243128A	Steel, RE0F08A/F08B (JF009E) Forward Clutch (24 Teeth)(.062”Thick) (4.260”ID)(5.140”OD) 2007-Up	3	
243130A	Steel, RE0F08A/F08B (JF009E) Reverse Clutch (16 Teeth)(.062”Thick) (5.970”ID) 2007-Up	3	
243131A	Cushion, RE0F08A/F08B (JF009E) Reverse Clutch (Dished)(4 Teeth) (.059”Thick)(6.020”ID) 2007-Up	1	

PART #	PRESSURE PLATES	QTY	REFERENCE #
243148A	Pressure Plate, RE0F08A/F08B (JF009E) (24 Teeth)(.135”Thick)(4.265”ID) 2007-Up	1	
243150A	Pressure Plate, RE0F08A/F08B (JF009E) (16 Teeth)(.135”Thick)(5.970”ID) 2007-Up	1	

PART #	SEALING RINGS	QTY	REFERENCE #
243175A	Ring Kit, RE0F08A/F08B (JF009E) 2002-Up	1	
243177AT	Ring, RE0F08A/F08B (JF009E) Input Shaft To Pump (.960”OD)(.070”Thick)(Teflon) 2007-Up	3	
323178A	Ring, RE0F08A/F08B (JF009E) Secondary Pulley To Rear Cover (.660”OD)(.065”Thick)(Double Lap Joint) 2009-Up	1	
243180AT	Ring, RE0F08A/F08B (JF009E) Shaft (Rear)(.660”OD)(.065”Thick)(Double Lapped Joint) 2007-Up	1	
243181AT	Ring, RE0F08A/F08B (JF009E) Pump Stator (2.305”OD)(.075”Thick)(Teflon)(Double Lap Joint) 2007-Up	2	
243183AT	Sealing Ring, RE0F08A/F08B (JF009E) Secondary Pulley Piston (.103”Thick)(5.510”OD) (.120”Wide)(Teflon) 2007-Up	1	
243187AT	Sealing Ring, RE0F08A/F08B (JF009E) Primary Pulley Piston (5.940”OD)(.110”Thick)(Teflon) 2007-Up	1	

PART #	WASHERS & BEARINGS	QTY	REFERENCE #
243211A	Bearing W/Races, RE0F08A/F08B (JF009E) Pump To Drum (2.315”OD)(1.635”ID)(.140”Thick) 2007-Up	1	

© Whatever It Takes Transmission Parts. Inc.

243227A ..... Washer, RE0F08A/F08B (JF009E) Secondary Pulley Nut To Bearing (Front)(.125"Thick)
..... (1.622"OD)(.865"ID)(Cast KOYO RNU040614) 2007-Up ..... 1 .....
243228A ..... Roller Bearing W/Inner Race, RE0F08A/F08B (JF009E) Secondary Pulley (Front)(14 Rollers)
..... (2.440"OD)(.545"Thick)(Cast KOYO RNU040614) 2007-Up ..... 1 .....
243229A ..... Ball Bearing, RE0F08A/F08B (JF009E) Secondary Pulley (Rear)(3.345"OD) (9 Balls)(.745"Thick)
..... (Cast KOYO 6209-6SH) 2007-Up ..... 1 .....
243230A ..... Shim, RE0F08A/F08B (JF009E) Secondary Pulley (3.320"OD) (Selective) 2009-Up ..... 1 .....
243232A ..... Bearing W/Race, RE0F08A/F08B (JF009E) Drum To Hub (2.550"OD)(1.935"ID)(.150"Thick)
..... 2007-Up (Also Fits RE0F08A/F08B Sungear To Planet 2007-Up) ..... 2 .....
243235A ..... Ball Bearing, RE0F08B (JF009E) Primary Pulley (8 Balls)(2.045"OD)(.985"ID)(.547'Thick)
..... (Cast KOYO 6205R-4/185H) 2009-Up ..... 1 .....
243235B ..... Ball Bearing, RE0F08A(JF009E) Primary Pulley (Sealed) (2.040"OD)(.980"ID)(.545"Thk)
..... (Cast # KOYO 6205-3617B) 2007-Up ..... 1 .....
243236A ..... Shim, RE0F08A/F08B (JF009E) Primary Pulley (2.025"OD) 2007-Up (Selective) ..... 1 .....
243247A ..... Use 243232A ..... 1 .....
243252A ..... Washer, RE0F08A/F08B (JF009E) Reverse Planet To Ring Gear (4.330"OD)(3.880"ID)(Plastic)
..... (10 Inner Notches) 2007-Up (Also Fits RE0F08A/F08B Reverse Ring Gear To Case 2007-Up) .. 2 .....
243255A ..... Use 243252A ..... 1 .....
243264A ..... Ball Bearing, RE0F08B (JF009E) Primary Pulley To Case (13 Balls) (3.145"OD)(.625"Thick)
..... (Cast NTN A-N2-6010V31) 2009-Up ..... 1 .....
243264B ..... Ball Bearing, RE0F08A(JF009E) Primary Pulley To Case (Sealed)(3.145"OD)(1.975"ID)
..... (.625"Thick) 2007-Up ..... 1 .....
243276A ..... Shim, RE0F08B (JF009E) Race To Case (.040"Thick)(2.068"OD) (1.770"ID) 2009-Up ..... 1 .....
243276B ..... Shim, RE0F08A(JF009E) Race To Case (.050"Thick)(2.068"OD) (1.770"ID) 2007-Up (Selective) 1 .....
243280A ..... Race, RE0F08A/F08B (JF009E) Pinion To Bell (Front & Rear) (2.085"OD)(.510"Thick)
..... (KOYO STA 3053) 2007-Up ..... 1 .....
243281A ..... Roller Bearing, RE0F08A/F08B (JF009E) Pinion (Front & Rear)(1.180"ID) (21 Rollers)
..... (Cast KOYO STA3053) 2007-Up ..... 1 .....
243289A ..... Use U243292A ..... 1 .....
243290A ..... Shim, RE0F08A/F08B (JF009E) Differential To Case (3.130"OD)(Selective) 2007-Up ..... 1 .....
243292A ..... Ball Bearing, RE0F08A/F08B (JF009E) Differential To Bell (9 Balls)(3.150"OD)(1.570"ID)
..... (.705"Thick)(Cast # NSK 6208A11) 2007-Up ..... 1 .....

PART #	GASKETS & RUBBER COMPONENTS	QTY	REFERENCE #

243300AF ..... Gasket, RE0F08A/RE0F08B (JF009E) Pan (Duraprene) (21 Holes) (19 Bolt Holes)(2 Dial
..... Pin Hole) 2007-Up ..... 1 .....
243310A ..... Gasket, RE0F08A/F08B (JF009E) Pump Stator To Case (Metal Bonded) (.015"Thick)(16 Round
..... Holes)(Horse Shoe Shape) 2007-Up ..... 1 .....
243311A ..... O-Ring, RE0F08A/F08B (JF009E) Pump Body To Bell (6 1/8"OD) (.120"Thick) 2007-Up ..... 1 .....
243335B ..... D-Ring, RE0F08A(JF009E) Forward Clutch Piston (Outer) (4.775"OD)(.070"Thick) 2007-Up ..... 1 .....
243336B ..... Lathe Cut Seal, RE0F08A(JF009E) Forward Clucth Piston (Inner)(2.805"OD)(.070"Thick)
..... 2007-Up ..... 1 .....
212342A ..... Transfer Seal, RE0F08A/F08B (JF009E) Valve Body To Case (Rubber)(.125"Thick)(.630"OD)
..... (.330"ID) 2007-Up ..... 2 .....
212344A ..... O-Ring, RE0F08B (JF009E) Rear Cover To Case Transfer (.065"Thick)(.860"OD) 2009-Up ..... 1 .....
212347A ..... O-Ring, RE0F08B (JF009E) Case Connector To Case (1.320"OD)(.140"Thick) 2009-Up ..... 1 .....
243369A ..... O-Ring, RE0F08B (JF009E) Output Sensor To Bell Housing (.690"OD)(.080"Thick) 2009-Up ..... 1 .....
243369B ..... O-Ring, RE0F08A(JF009E) Sensor To Bell Housing (.690"OD) 2007-Up ..... 1 .....
243370A ..... O-Ring, RE0F08B (JF009E) Sensor To Rear Cover (.695"OD) (.080"Thick) 2009-Up ..... 1 .....
323371-1A ..... O-Ring, RE0F08A/F08B (JF009E) Dipstick To Tube (.570"OD)(.100"Thick) 2007-Up ..... 1 .....
212371A ..... O-Ring, RE0F08A/F08B (JF009E) Dipstick Tube To Case (.745"OD)(.100"Thick) 2007-Up ..... 1 .....
212378A ..... Washers, RE0F08A/F08B (JF009E) Oil Cooler Fitting To Case (Brass)(.035"Thick)(.875"OD)
..... 2007-Up ..... 2 .....
243380A ..... O-Ring, RE0F08A/F08B (JF009E) Input Shaft To Converter (.845"OD) (.070"Thick) 2007-Up ..... 1 .....
243387B ..... Gasket, RE0F08A/F08B (JF009E) Drain Plug To Pan (Metal Bonded)(.715"OD)(.470"ID)
..... (.048"Thick) 2009-Up ..... 1 .....
323387A ..... O-Ring, RE0F08A/F08B (JF009E) Partial Drain Plug To Case (.100"Thick) 2007-Up ..... 1 .....
212389A ..... O-Ring, RE0F08A/F08B (JF009E) Rear Cover To Bearing Retainer (.455"OD) 2007-Up ..... 1 .....
212391A ..... O-Ring, RE0F08A/F08B (JF009E) Pressure Tap (.465"OD)(.085"Thick) 2007-Up ..... 5 .....
212391B ..... O-Ring, RE0F08A (Nissan/Dodge) Pressure Plug To Rear Cover (.940"OD)(.080"Thk)
..... 2007-Up .....

PART #	ELECTRICAL COMPONENTS	QTY	REFERENCE #

203410A ..... Park/Neutral Switch, REOFO9A (W/TFT)(Cast # PA66-GF30)(7 Prong Connector)2003-Up
..... (Also Fits RE0F08A(JF009E) 2007-Up) ..... 1 .....
243414A ..... Switch, RE0F08B (JF009E) Pressure Control A (3 Pin Rectangle Connector)
..... (CP5-15 R9CZ12 C24)(1 O-Ring) 2009-Up ..... 1 .....

© Whatever It Takes Transmission Parts. Inc.

PART #	ELECTRICAL COMPONENTS (Continued)	QTY	REFERENCE #
243414B	Sensor, RE0F08A(JF009E) Secondary Fluid Pressure A (3 Rectangle Connetor) (CP5-10 T7CZ24 C23 Cast)(Black Connector) (1.480"Long) 2007-Up	1	
243415B	Sensor, RE0F08A(JF009E) Primary Fluid B (3 Pin Rectangle Connector)(CP5-11 P7R14 MX8 Cast)(Screw In)(1.480"Long) 2007-Up	1	
243421A	Solenoid, RE0F08B (JF009E) Pressure Control A (2-Blade Rectangle Connector)(2 O-Ring Snout)(09716 2 M On Top With Hole) 2009-Up	2	
243421B	Solenoid, RE0F08A(JF009E) Pressure Control A (2 Blade Retangle Connector)(7904 On Top) (2 O-Rings On Brown Snout) 2007-Up	1	
243425A	Solenoid, RE0F08B (JF009E) TCC Control (2 Blade Rectangle Connector)(09716 3 On Top No Hole)(2 O-Ring On Snout) 2009-Up	1	
243425B	Solenoid, RE0F08A(JF009E) TCC Control (2 Blade Rectangle Connector)(07X17-3 On Top) (2 O-Ring On Black Snout) 2007-Up	1	
243430A	Solenoid, RE0F08B (JF009E) TCC Select (2 Blade Rectangle Connector)(9918 On Top W/ Hole) (2 O-Ring Brown Snout) 2009-Up	1	
243430B	Solenoid, RE0F08A(JF009E) TCC Select (2 Black Rectangle Connector)(07X17-3 On Top) (2 O-Rings On Black Snout) 2007-Up	1	
243435A	Solenoid, RE0F08B (JF009E) Pressure Control B (Same As Pressure Control A) 2009-Up	1	
243435B	Solenoid, RE0F08A(JF009E) Pressure Control B (2 Blade Rectangle Conn.)(07X17-3 On Top) (2 O-Ring On Black Snout) 2007-Up	1	
212438A	Sensor, RE0F08A/F08B(JF009E) On Top Of Bell Housing (90 Degrees)(.665"OD O-Ring) (1.920"Long) 2009-Up (Also Fits RE0F08B Rear Cover)(Reads Of The Primary Pulley)	1	
243438A	Use 212438A	1	
243446A	Wire Harness, RE0F08B (JF009E) (22 Pin Main Connector) 2009-Up	1	
243446B	Wire Harness, RE0F08A(JF009E) (22 Pin Connector) 2007-Up	1	
243452A	Ratio Control Motor, RE0F08B (JF009E) (Stepper)(6 Blade Rectangle Connector)(2 Hole Bracket)(SMO1 9915) 2009-Up	1	
243452B	Ratio Control Motor, RE0F08A(JF009E) (Stepper)(6 Blade Rectangle Connector)(2 Hole Bracket)(SM01 7919 Cast) (.630"Brass End)(.898"Wide Conn.)(.875"Between Holes On Bracket) 2007-Up	1	
243469A	ROM Assembly, RE0F08B (JF009E) Read Only Memory (5 Pin Rectangle Connector) (1.480"Long x .970"Wide) 2009-Up	1	
243469B	ROM Assembly, RE0F08A(JF009E) Read Only Memory (1.935"Long) (1.340"Wide)(5 Pin Rectangle Connector) 2007-Up	1	
243469B-1	Bracket, RE0F08A(JF009E) For ROM Assembly (2 Bolt)(2.720"Wide)(.750"Tall Legs) 2007-Up	1	

PART #	MISCELLANEOUS COMPONENTS	QTY	REFERENCE #
212488A	Plug, RE0F08A (JF009E) Pressure In Rear Cover (10mm Allen Head)(.755"Long)(1.095"/ .860"OD) 2007-Up		
243492	Drain Plug, RE0F08A/F08B (JF009E) Bottom Pan (19mm Hex x .645"Long) 2007-Up		
323492A	Drain Plug, RE0F08A/F08B (JF009E) Partial (10mm Allen Head)(1.095" / .860"OD)(.750"Long) (In Case Below Filler Tube) 2007-Up		
243493A	Dipstick W/O-Ring, RE0F08A/F08B (JF009E)(10 5/8"Long) 2007-Up	1	
243494A	Dipstick Tube, RE0F08A/F08B (JF009E) (1 Bolt Flange)(9 1/2"Long) 2007-Up	1	
243496A	Cooler Line, RE0F08B (JF009E) (Front)(Banjo Fitting) (C Shape With Alignment Bracket) 2009-Up	1	
243496AB	Cooler Line, RE0F08A(JF009E) (Front)(Banjo Fitting) (3 Bends)(9 1/4"Long) 2007-Up	1	
243496B	Cooler Line, RE0F08B (JF009E) (Rear)(Banjo Fitting)(Slight Bend)(Alignment Bracket) 2009-Up	1	
243496BB	Cooler Line, RE0F08A(JF009E) (Rear)(Banjo Fitting) (6"Long)(2 Bends)(No Bracket) 2007-Up	1	

PART #	HARDPARTS	QTY	REFERENCE #
243500A	Pump Assembly, RE0F08A/F08B (JF009E) (9 Bolts To Case)(Aluminum) 2009-Up	1	
243510A	Pump Body, RE0F08A/F08B (JF009E) With Gears (6.100"OD) (2.400"Seal Pocket)(3.575" Geo-Pocket)(8 Threaded Holes) 2007-Up	1	
243520A	Stator, RE0F08A/F08B (JF009E) Pump (9 Bolts To Case)(Aluminum)(8 Bolts To Body)(3.600"Tall Through Tube) 2007-Up	1	
243530A	Pump Gear Set, RE0F08A/F08B (JF009E) (9 Teeth Inner)(10 Teeth Outer) (.414"Thick) (3.575"OD)(4 Slots For Converter) 2007-Up	1	
243554A	Drum, RE0F08B (JF009E) Forward Clutch (Stamped Steel)(3 Clutch) (24 Teeth Steels)(2.280"ID Bore)(1.645"Tall)(5.360"OD) 2009-Up	1	
243554B	Drum, RE0F08A(JF009E) Forward Clutch (Stamped Steel)(3 Clutch)(24 Teeth Steels)(2.320"ID Bore)(1.645"Tall) 2007-Up	1	
243564A	Piston Kit, RE0F08B(JF009E) Forward Clutch (Contains; # 964, 974, 984, & 877) 2009-Up	1	
243566A	Piston Kit, RE0F08B(JF009E) Reverse Clutch (Contains: # 893, 986, 976, 976-1 & 966) 2009-Up	1	

© Whatever It Takes Transmission Parts. Inc.

243587A ..... Planet, RE0F08A/F08B (JF009E) Reverse Clutch (8 Gears)(Steel) (24 Outer Lugs)(17 Teeth Left Angle)(18 Teeth Right Angle For Sungear) 2007-Up 1

243597A ..... Ring Gear, RE0F08A/F08B (JF009E) Reverse Hub (82 Teeth Right Angle) (30 Outer Clutch Splines)(1.975" Tall)(5.980"OD) 2007-Up 1

243617A ..... Clutch Hub, RE0F08A/F08B (JF009E) Foward Clutch (W/42 Teeth) (Left Angle Sun Gear) (30 Clutch Splines)(34 Inner Splines) (4.185"OD) 2007-Up 1

243670A ..... Input Shaft, RE0F08A/F08B (JF009E) (7 5/8"Long)(.550"OD Pilot) (4 Teflon Rings) 2007-Up 1

243690A ..... Park Gear, RE0F08A/F08B (JF009E) Secondary Pulley (8 Notches) (24 Splines)(.655"Thick) (3.110"OD) 2007-Up 1

243691-2A ..... Guide Pin, RE0F08B (JF009E) Ratio Control Motor Follower (6.205"Long) 2009-Up 1

212691-3A ..... Return Spring, RE0F08A/F08B Ratio Control Motor Follower (1.645"Long)(.820"OD & .810"OD Retainers On Each End) 2007-Up 1

243691A ..... Ratio Control Motor Follower, RE0F08A/F08B (JF009E) (Aluminum) (2.625"Long)(.170"/375" Thick At Fork) 2007-Up 1

243692A ..... Retainer, RE0F08A/F08B (JF009E) Holds Secondary Pulley To Horseshoe Clips (.200"Thick) (2.055"OD)(1.815"ID) 2007-Up 1

243695B ..... Retainer, RE0F08A(JF009E) Primary Pulley Holds Horese Shoe Clips To Shaft (.195"Thk) (2.050"OD)(1.810"ID) 2007-Up .....

243696A ..... Bracket, RE0F08A/F08B (JF009E) Secondary Pulley Bearing To Rear Cover (3 Bolt)(2.930"ID) (.390"Thick) 2007-Up 1

243698A ..... Oil Deflector RE0F08A/F08B (JF009E) Differential To Bell (1.550"Tall) (4 Bolt)(8"OD) 2007-Up 1

243699A ..... Oil Deflector, RE0F08A/F08B (JF009E) Differential To Case (1.460"Tall) (4 Bolt)(7 3/4"OD) 2007-Up 1

299700A ..... Belt, RE0F08A/RE0F08B 2007-Up .....

205705-1A ..... Steel Ball, RE0F08A/F08B(JF009E) Primary Pulley & Secondary Pulley) 6/12

243705A ..... Pulley Half, RE0F08B (JF009E) Primary (Front)(7"Long) (6 1/32"OD)(1.258"OD) 2009-Up 1

243705B ..... Pulley Half, RE0F08A(JF009E) Primary (Front)(7"Long) (6 1/32"OD)(34 Splines)(.985"Pilot) 2007-Up 1

243706A ..... Pulley Half, RE0F08A/F08B (JF009E) Secondary (Front)(2.875"Thick) (6.195"OD)(5.455"ID Piston Pocket) 2007-Up 1

243707A ..... Pulley Half, RE0F08B (JF009E) Primary (Rear)(2.425"Tall) (6.235"OD At Reluctor With 30 Splines)(5.940"ID Pocket) 2009-Up 1

243707B ..... Pulley Half, RE0F08A(JF009E) Primary (Rear)(2.410"Tall) (6.290"OD)(5.940"ID Pocket) 2007-Up 1

243708A ..... Pulley Half, RE0F08A/F08B (JF009E) Secondary (Rear)(10 1/16"Long) (6.195"OD)(24 Spline) 2007-Up 1

243710A ..... Gear, RE0F08A/F08B (JF009E) Secondary Pulley (Front)(35 Teeth) (No Groove)(.915"Thick) (2.925"OD) 2007-Up 1

243712A ..... Gear, RE0F08A/F08B (JF009E) Driven Transfer (52 Teeth Left Angle) (32 Splines)(.955"Thick) (.880"Thick At Teeth)(4.255"OD) 2007-Up 1

243715A ..... Differential Assembly, RE0F08A/F08B(JF009E) (8 Bolt)(70 Teeth Ring Gear) 2007-Up 1

243716A ..... Differential Housing, RE0F08A/F08B (JF009E) (1.575"OD Nose)(5.665"Tall) (8 Bolt)(2 Windows) (Ribbed On Rear) 2007-Up 1

243720A ..... Ring Gear, RE0F08A/F08B (JF009E) Differential (70 Teeth)(1.390"Thick) (7.750"OD) 2007-Up 1

243730A ..... Pinion, RE0F08A/F08B (19 Teeth Left Angle)(1 Center Groove) (4.615"Long)(.865"OD) 2007-Up 1

243740A ..... Valve Body, RE0F08B (JF009E) (4 Solenoids)(1 Pressure Switch) (Stepper Motor)(1XA02 & 1XC On Filter Side) 2009-Up 1

243740B ..... Valve Body, RE0F08A(JF009E) (4 Solenoids)(1 Pressure Switch W/ Stepper Motor)(1XA02 Upper Half)(FYO On Filter Side) 2007-Up 1

243741-1A ..... Manual Valve, RE0F08B (JF009E) For Valve Body (Aluminum)(3.975"Long) (.470"OD)(3 Lands) 2009-Up 1

243741-1B ..... Manual Valve, RE0F08A(JF009E) For Valve Body (4.320"Long)(.470"OD) (.240"Between Lands) (1/2 Round With .160"hole) 2007-Up 1

243750A ..... Bell Housing, RE0F08B (JF009E) (9 3/8" Top Bolts) (FYD Cast #)(20 Bolts To Case)(2:30 Closed Starter) (2.205"OD Axel Seal) 2009-Up 1

243750B ..... Bell Housing, RE0F08A(JF009E) (9 3/8"Top Bolts)(20 Bolts To Case)(2 Threaded Holes Above Starter)(2.205"OD) 2007-Up 1

243759A ..... Rear Cover, RE0F08B (JF009E) (14 Bolts To Case)(FYB Casting)(No Speed Sensor)(1 Ring For Secondary Lube) 2007-Up 1

243759AK ..... Rear Cover With Pulley Assembly, RE0F08B (JF009E)(14 Bolts To Case)(FYB Casting)(No Speed Sensor)(1 Ring For Secondary Lube) 2007-Up (Includes #700, 705, 706, 707, 708, 710 & 759) 1

243759B ..... Rear Cover, RE0F08A(JF009E)(14 Bolts To Case)(ALO Casting)(With Speed Sensor) 2009-Up 1

243759BK ..... Rear Cover With Pulley Assembly, RE0F08A (JF009E)(14 Bolts To Case)(ALO Cast)(With Speed Sensor) 2009-Up (Includes #700, 705, 706, 707, 708, 710 & 759) 1

243760A ..... Case, RE0F08B (JF009E) (20 Bolts To Bell)(14 To Rear Cover) (ALO Cast)(2.200"Axle Seal OD) (19 Pan Bolts) 2009-Up 1

243760B ..... Case, RE0F08A(JF009E) (20 Bolts To Bell)(14 To Rear Cover) (FYB Cast #)(Stud On Top For Linkage) 2007-Up 1

212761A ..... Plug Pressure Tap, RE0F08A/F08B (14mm Hex x .670"Long) 2007-Up 5

© Whatever It Takes Transmission Parts. Inc.

PART #	HARDPARTS (Continued)	QTY	REFERENCE #
243414B	Sensor, RE0F08A(JF009E) Secondary Fluid Pressure A (3 Rectangle Connetor) (CP5-10 T7CZ24 C23 Cast)(Black Connector) (1.480"Long) 2007-Up	1	
243769A	Housing W/ Filter, RE0F08A/F08B (JF009E) Cooler (4 Bolt Aluminum) (Glued In Filter) (25450-PWR-003 OE Number) 2007-Up	1	
243776AK	Bolt Set, RE0F08A/F08B (JF009E) Bell Housing To Case (20 Pieces) (12mm Hex X 1.705"Long) 2007-Up	1	
243777AK	Bolt Set, RE0F08A/F08B (JF009E) Pump To Case (9 Pieces)(12mm Hex X 1.750"Long) 2007-Up	1	
243778AK	Bolt Set, RE0F08A/F08B (JF009E) Pump Stator To Body (6mm Allen X .950"Long)(8 Pieces) 2007-Up	1	
243779AK	Bolt Set, RE0F08A/F08B (JF009E) Pan To Case (Bottom)(10mm Hex x .880"Long) 2007-Up	1	
243781AK	Bolt Set, RE0F08A/F08B (JF009E) Rear Cover (14 Pieces)(12mm Hex x 1.795"Long) 2007-Up	1	
243783AK	Bolt Set, RE0F08A/F08B (JF009E) Rear Cover To Retainer For Secondary Pulley (12mm Hex x 1.175"Long)(3 Pieces) 2007-Up	1	
243786AK	Bolt Set, RE0F08A/F08B (JF009E) Ring Gear To Differential Housing (8 Pieces) (15mm Head x 1.120 Left Hand Thread) 2007-Up	1	
243791AK	Bolt Set, RE0F08B (JF009E) Valve Body To Case (Four 10mm Hex x 1.385"Long) (Two 10mm Hex x 2.295"Long) 2009-Up	1	
243791BK	Bolt Set, RE0F08A(JF009E) Valve Body To Case (2 10mm Hex X 2.295" Long) (3 10mm Hex X 1.385"Long) 2007-Up (If Out use 243791AK)	1	
243793AK	Bolt Set, RE0F08A/F08B (JF009E) Filter To Valve Body (15 Pieces)(14-10mm Hex x 2.910"Long) (1-10mm Hex x 1.930"Long) 2007-Up	1	
243795A	Nut, RE0F08B (JF009E) Primary Pulley (46mm)(6pt Right Hand Thread) (.305"Thick)(1.222"ID) 2009-Up	1	
243796A	Nut, RE0F08A/F08B (JF009E) Pinion Shaft (32mm)(.475"Thick) (1.430"OD)(8.25"ID) 2007-Up	1	
243797-1A	Nut, RE0F08A/F08B (JF009E) Secondary Pulley (Front)(40mm)(6 Point) (.410"Thick)(.827"ID) 2007-Up	1	
243797A	Nut, RE0F08A/F08B (JF009E) Secondary Pulley (Rear)(55mm)(6 Point) (.280"Thick)(1.735"ID) 2007-Up	1	
323799-1A	Nut, RE0F08A/F08B(JF009E) Holds Internal Lever To End Of Shaft (14mm Hex)(RH Threads) 2007-Up	1	
243799B	Nut, RE0F08A(JF009E) Holds External Linkage (6 Point) (19mm)(RH Threads)(.315"Thick) 2007-Up	1	
212843A	Clip, RE0F08A/F08B Case Connector To Case (1.300"Long)(.050"Wire)(1.080"Wide) 2007-Up		
243853A	Cushion, RE0F08B (JF009E) Foward (Dished)(4.955"OD) (4.255"ID)(.045"Thick) 2009-Up	1	
243853B	Cushion, RE0F08A(JF009E) Foward Clutch (18 Fingers) (4.945"OD)(.110"Tall)(.062"Thk) 2007-Up	1	
243860A	Snap Ring, RE0F08A/F08B (JF009E) Holds Balls To Secondary Pulley (1.805"OD) (.085"Thick Wire) 2007-Up	1	
243860B	Snap Ring, RE0F08A/F08B (JF009E) Holds Balls To Secondary Pulley (Rear)(1.600"OD) (.085"Thick Wire) 2007-Up	1	
243861A	Snap Ring, RE0F08A/F08B (JF009E) Holds Primary Ball Retainer To Pulley (1.535"OD) (.090"Wire OD) 2007-Up	1	
243865A	Snap Ring, RE0F08A/F08B (JF009E) Primary Rear Half (1.795"OD) (.185"Wire) 2007-Up	1	
243876A	Snap Ring, RE0F08B (JF009E) Holds Foward Clutch In Drum (.098"Thick)(5.265"OD) (.195"Wide) 2009-Up	1	
243877A	Snap Ring, RE0F08B (JF009E) Holds Retainer To Drum (2.625"OD)(.035"Thick)(.117"Wide) 2009-Up	1	
243880A	Snap Ring, RE0F08A/F08B (JF009E) Holds Input Shaft To Drum (.960"OD)(.045"Thick) 2007-Up	1	
243887A	Horse Shoe Clips, RE0F08A/F08B (JF009E) Secondary Pulley (.290"Thick)(1.800"Long) (Takes 2 Pieces Per Unit) 2007-Up	2	
243888B	Horse Shoe Clips, RE0F08A (JF009E) Secondary Pulley (.210"Thick)(1.795"Long)(2 Pcs) 2007-Up	1	
243892A	Snap Ring, RE0F08A/F08B (JF009E) Holds Reverse Clutch (.092"Thick) (6.995"OD)(.200"Wide) 2007-Up	1	
243893A	Snap Ring, RE0F08A/F08B (JF009E) Holds Reverse Clutch Retainer To Case (4.450"OD) (.035"Thick)(.140"Wide) 2007-Up	1	
243899A	Snap Ring, RE0F08A/F08B (JF009E) Holds Retainer To Secondary Pulley (Front)(.065"Thick) (5.965"OD)(.160"Wide) 2007-Up	1	
243960A	Piston, RE0F08A/F08B (JF009E) Secondary Pulley (2.063"Thick) (5.465"OD)(1.270"ID) 2007-Up	1	
243964A	Piston, RE0F08B (JF009E) Foward Clutch (Bonded)(4.850"OD) (2.530"ID)(.540"Tall) 2009-Up	1	
243964B	Piston, RE0F08A(JF009E) Foward Clutch (Alum)(4.825"OD) (2.545"ID)(18 Spring Pockets) 2007-Up	1	
243966A	Piston, RE0F08A/F08B (JF009E) Reverse Clutch (Bonded)(1.735"Tall) (6.215"OD)(4.400"ID) 2007-Up	1	

© Whatever It Takes Transmission Parts. Inc.

243970B .....Spring, RE0F08A (JF009E) Secondary Pulley (3.080”Tall) (2.725”OD)(.240”Wire OD) 2007-Up ..1 .....

243971A .....Spring, RE0F08B (JF009E) Primary Pulley Piston Return (2.745”OD)(3.085”Tall)(.240”Wire)
.....2009-Up .....1 .....
243971B .....Spring, RE0F08A (JF009E) Primary Pulley Piston Return (2.685”OD)(3.085”Tall)(.203”Wire Size)
.....2007-Up .....1 .....

243974A .....Return Spring, RE0F08B (JF009E) Foward (27 Springs) (3.650”OD)(1.790”ID)(.845”Tall)
.....2009-Up .....1 .....
243974B .....Return Spring, RE0F08A(JF009E) Foward Clutch (18 Springs) (1.063”Tall)(2.515”ID)(3.802”OD)
.....2007-Up .....1 .....
243976-1A.....Spring Seat, RE0F08A/F08B (JF009E) Reverse Clutch Spring To Piston (Tin)(.550”Tall)
.....(4.795”ID)(5.810”OD) 2007-Up .....1 .....
243976A .....Return Spring, RE0F08/F08B (JF009E) Reverse Clutch (Spiral Type) (5.430”OD)(5.005”ID)
.....(.920”Thick) 2007-Up .....1 .....

243980A .....Retainer, RE0F08A/F08B (JF009E) Secondary Pulley Piston (2.405”Tall)(5.550”OD) 2007-Up ....1 .....
243981A .....Piston/Retainer, RE0F08B (JF009E) Primary Pulley (1.415”Thick) (Steel)(5.935”OD)(1.280”ID)
.....2009-Up .....1 .....
243981B .....Piston, RE0F08A(JF009E) Primary Pulley (1.340”Thick) (5.935”OD)(1.280”ID) 2007-Up .....1 .....
243984A .....Retainer, RE0F08B (JF009E) Foward (Bonded)(4.670”OD) (2.510”ID)(.490”Thick) 2009-Up .....1 .....
243986A .....Retainer, RE0F08A/F08B (JF009E) Reverse Clutch (4.355”ID) (5.550”OD)(Steel)(.195”Thick)
.....2007-Up .....1 .....
323991-1A.....Lever, RE0F08A/F08B(JF009E) (Internal) (2.240”Long)(.125”Thick) 2007-Up .....
243991-2A.....Dentent, RE0F08A/F08B (JF009E) (4.015”Long)(.828”Wide) 2007-Up .....1 .....
243991-3A.....Rooster Comb, RE0F08A/F08B (JF009E) (5 Dentents)(.475”Wide) (1.715”Tall) 2007-Up .....1 .....
203991-5A.....Pin, RE0F08A/F08B (JF009E) Holds Manual Shaft In Place(.156” OD, 1.980” Long) 2007-Up.....
243991-7A.....Roll Pin, RE0F08A/F08B (JF009E) Rooser Comb To Shaft 2007-Up.....1 .....
203991-8A.....Sleeve, RE0F08A/F08B Manual Shaft To Valve Body(.510” Thk, .590” OD, .475” ID) 2007-Up .....
243992-1B.....Dust Cover, RE0F08A(JF009E) Covers Pivot Joint On External Linkage (1.280”Long)(1.075”Tall)
.....(Plastic) 2007-Up .....
243992A .....Linkage Lever, RE0F08B (JF009E) External (W/15 3/4”Rod) (Threaded End & Stud) 2009-Up....1 .....
243992B .....External Linkage, RE0F08A(JF009E) (14”Long Shaft)(4 Piece Pivoting Linkage)(.470”OD)
.....2007-Up .....1 .....
243994A .....Park Rod, RE0F08A/F08B (JF009E) (3.215”Long)(.815”OD Head) 2007-Up .....1 .....
243995A .....Park Pawl Assembly, RE0F08A/F08B (JF009E) (4 Pieces) (Pawl- .390”Thk)(Pin- .430”OD)
.....(Spring- 1.210”OD) (Actulator- 2 15mm Bolts, .1.405”Long) 2007-Up.....1 .....
243996A .....Bolt, RE0F08A/F08B (JF009E) Banjo Fitting To Case (17mm Hex x 1.530”Long) 2007-Up .....2 .....
243999-1A.....Oil Tube, RE0F08A/F08B (JF009E) Case To Lube Belt (4”Long) (2 Bends)(.465”OD Head)
.....2007-Up .....1 .....
243999-6A.....Oil Tube, RE0F08A/F08B (JF009E) On Bell For Lube (7 Bends) (.250”OD)(8 1/2”Long At Tips)
.....2007-Up .....1 .....

© Whatever It Takes Transmission Parts. Inc.

RE0F09A (1XD) / RE0F09B (1XE) (JF010E) FWD CVT

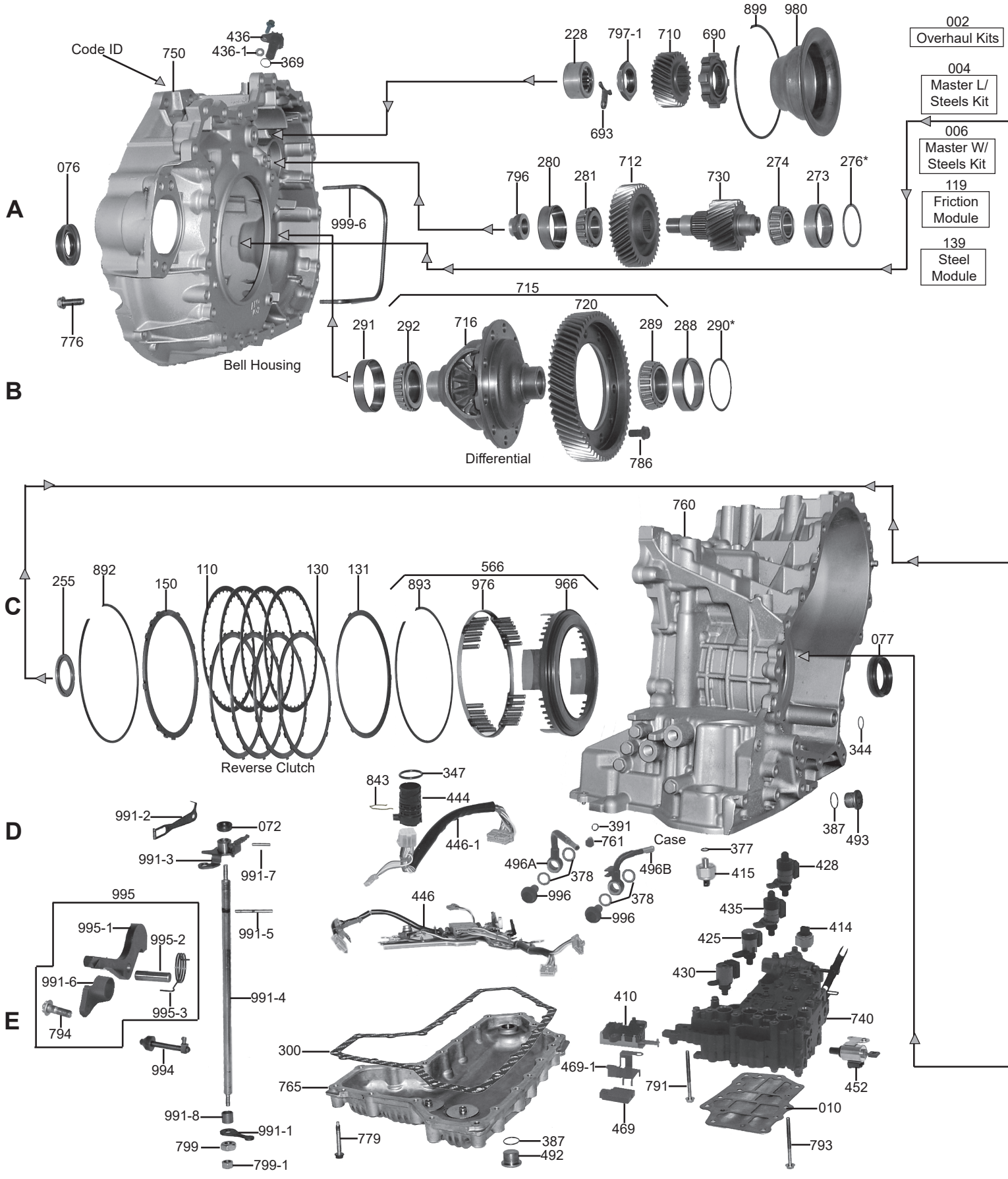

© Whatever It Takes Transmission Parts. Inc.

RE0F09A (1XD) / RE0F09B (1XE) (JF010E)

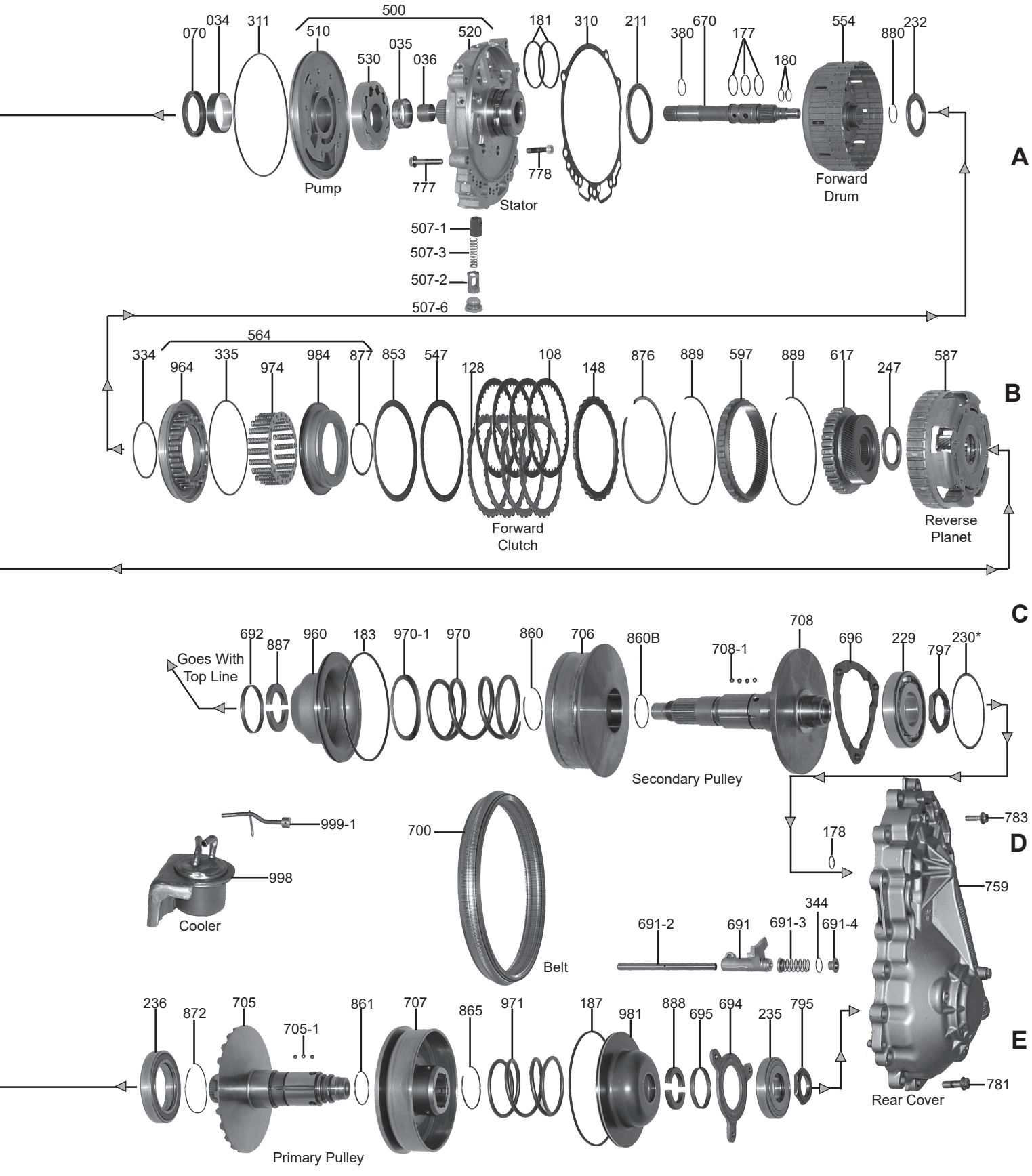

1-800-940-0197

© Whatever It Takes Transmission Parts. Inc.

PART #	OVERHAUL KIT	QTY	REFERENCE #
203002A	Overhaul Kit, RE0F09A/F09B 2003-15 (For Bonded Pistons Sell A203960AK)	1	
203002AFP	Overhaul Kit, RE0F09A/F09B 2003-15 (W/ Pistons)	1	

PART #	MASTER L/STEELS KIT	QTY	REFERENCE #
203004A	Master L/Steels Kit, RE0F09A/F09B 2003-15 (For Bonded Pistons Sell A203960AK)	1	

PART #	MASTER W/STEELS KIT	QTY	REFERENCE #
203006A	Master W/Steels Kit, RE0F09A/09B 2003-15 (For Bonded Pistons Sell A203960AK)	1	

PART #	FILTERS	QTY	REFERENCE #
203010A	Filter, RE0F09A (Fits Most Steel Pans)(1" Round Pick Up) 2003-up	1	
203010B	Filter, RE0F09A/F09B (Fits Most Aluminum Pans) 2007-2014 (1/2" Rectanguler Pick Up) (Can Use A243010A Rectangle if Out)	1	
212013B	Filter, RE0F09A/09B External (Steel)(On Rear Of Case) 2003-Up	1	

PART #	BUSHINGS	QTY	REFERENCE #
203034A	Bushing, RE0F09A/09B Pump Body (1.920"ID)(Babbit) 2003-Up	1	
203035A	Bushing, RE0F09A/09B Inner Pump Gear (.560"Wide)(1.558"OD)(1.360"ID)(Babbit) 2003-Up	1	
203036A	Bushing, RE0F09A/09B Stator (Front) (.675"Wide)(.925"ID)(Babbit) 2003-Up	1	
83036B	Bushing, RE0F09A/09B Stator(Front)(.925" ID)(Babbit)	1	

PART #	METAL CLAD SEALS	QTY	REFERENCE #
203070A	Seal, RE0F09A/F09B Front (Pump) (.315"Thick)(2.530"OD)(1.905"ID) 2003-Up	1	
60072	Seal, RE0F09A/F09B Manual Shaft (.275"Thick)(.875"OD)(In Bell Housing)	1	
203076A	Use 93076	1	
203076AA	Seal, RE0F09A/09B (AWD) Bell Housing Side (3.075"OD)(2.040"ID)(.350"Thick) 2003-Up	1	
203076B	Seal, RE0F09A/09B (JF010E) AWD Right Axle 2003-Up	1	
93076	Seal, RE0F09A/09B Axle (Bell Housing Side)(33mm x 59mm x 17mm) 2003-Up	1	
203077A	Use 83077B	1	
83077B	Seal, RE0F09A/F09B Axle (Case Side) (.535"Thick)(2.323"OD)(1.510"ID) 2003-Up	1	

PART #	FRICTIONS	QTY	REFERENCE #
203108A	Friction, RE0F09A/F09B Forward Clutch (.061")(36 Teeth)(5.430"OD) 2003-Up	4	
203110A	Friction, RE0F09A/F09B Reverse Clutch (.062")(40 Teeth)(7 1/16"OD) 2003-Up	4	
203119A	Friction Module, RE0F09A/F09B 2003-15	1	

PART #	STEELS	QTY	REFERENCE #
203128A	Steel, RE0F09A/F09B Forward Clutch (.055")(30 Teeth)(4.710"ID) 2003-Up	4	
203130A	Steel, RE0F09A/F09B Reverse Clutch (.054")(12 Teeth)(6 7/16"ID) 2003-Up	4	
203131A	Steel, RE0F09A/F09B Reverse Clutch (.073")(3 Teeth)(6 7/16"ID)(Dished) 2003-Up	4	
203139A	Steel Module, RE0F09A/F09B 2003-Up	1	

PART #	PRESSURE PLATES	QTY	REFERENCE #
203148A	Pressure Plate, RE0F09A/F09B Forward Clutch (.140")(30 Teeth)(4.719"ID) 2003-Up	1	
203150A	Pressure Plate, RE0F09A/F09B Reverse Clutch (.140")(12 Teeth)(6 1/2"OD) 2003-Up	1	

PART #	SEALING RINGS	QTY	REFERENCE #
203175A	Ring Kit, RE0F09A/F09B (JF010E) 2003-15	1	
203177AT	Sealing Ring, RE0F09A/F09B Input Shaft (.069"Thick)(1.120"OD)(Teflon) 2003-Up	3	
203178AT	Sealing Ring, RE0F09A/F09B Rear Cover To Secondary Pulley Shaft (.665"OD)(Teflon)03-Up	1	
203180AT	Sealing Ring, RE0F09A/F09B Input Shaft (Rear)(.063"Thick)(.665"OD)(Teflon) 2003-Up	1-2	
203181AT	Sealing Ring, RE0F09A/F09B Stator To Forward Clutch Drum (.084"Thick)(2.510"OD)(Teflon) 2003-Up	2	
203183AT	Sealing Ring, RE0F09A/F09B Secondary Pulley Piston (.103"Thick)(5.865"OD)(Teflon) 2003-Up	1	
203187AT	Sealing Ring, RE0F09A/F09B Primary Pulley Piston (.103"Thick)(6.220"OD)(Teflon) 2003-Up	1	

© Whatever It Takes Transmission Parts. Inc.

PART #	WASHERS & BEARINGS	QTY	REFERENCE #
203211A	Bearing W/Races, RE0F09A/F09B Stator To Forward Clutch Drum (.155"Thick)(3.340"OD)(2.660"ID) 2003-Up	1	
203228A	Caged Needle Bearing, RE0F09A/F09B Secondary Pulley Shaft To Bell Housing (1.020"Thick) (2.050"OD)(Cast # HTFVP26Z-1G NSK)(10 Rollers) 2003-Up	1	
203229A	Ball Bearing, RE0F09A Secondary Pulley (Rear) To Rear Cover (.825"Thick)(4.133"OD) (1.770"ID)(Cast # NSK B45-111E) 2003-Up	1	
203229B	Ball Bearing, RE0F09B Secondary Pulley (Rear) To Rear Cover (.715"Thick)(3.935"OD)(11 Balls) (Cast # NSK B46-SOE)	1	
S203229AK	Pulley Bearing Kit, Pulley Bearing Kit, RE0F09A/F09B (Includes Primary Pulley Bearings (#235 & #236), Secondary Pulley Bearing (#229) & Internal Snap Ring (#862)) 2003-Up	1	
203230A	Shim, RE0F09A/F09B Secondary Pulley Bearing # 229 To Rear Cover (Selective)(4.113"OD) (3.780"ID) 2003-Up	1	
203232A	Bearing W/Races, RE0F09A/F09B Forward Drum To Sun Gear Hub (.149"Thick)(2.390"OD) (1.580"ID)2003-Up (Also Fits RE0F09A/F09B # 247 & # 255)	1-3	
203235A	Ball Bearing, RE0F09A/F09B Primary Pulley (Rear) To Rear Cover (.589"Thick)(3.305"OD) (1.268"ID)(Cast # NSK 32TM12U40AL) 2003-Up	1	
203236A	Ball Bearing, RE0F09A/F09B Primary Pulley (Front) To Case (.667"Thick)(3.942"OD)(2.560"ID) (Cast # 65TM02U40A NSK) 2003-Up	1	
203247A	Use 203232A.	1	
203255A	Use 203232A.	1	
203273A	Use 203280A.	1	
203274A	Use 203281A.	1	
203276A	Shim, RE0F09A/F09B Pinion Cup Race To Case (Selective)(2.422"OD)(2.050"ID) 2003-Up	1	
203280A	Cup Race, RE0F09A/F09B Pinion Shaft (Front)(.665"Thick)(2.440"OD)(Cast # KOYO 32206J Or STJ3062)(Bell Housing Side) 2003-Up (Also Fits RE0F09A/F09B Pinion Shaft (Rear) # 273 2003-Up)	1-2	
203281A	Cone Bearing, RE0F09A/F09B Pinion Shaft (Front)(1.180"ID)(16 Roller)(Cast # KOYO STA3062-1) (Bell Housing Side) 2003-Up (Also Fits RE0F09A/F09B Pinion Shaft (Rear) # 274 2003-Up)	1-2	
203288A	Use 203291A.	1	
203289A	Use 203292A.	1	
203291A	Cup Race, RE0F09A/F09B Differential To Bell Housing (.628"Thick)(2.950"OD)(Cast # KOYO STA4575) 2003-Up (Also Fits RE0F09A/F09B Differential To Case # 288 2003-Up)	1-2	
203291AA	Race, RE0F09A/09B (AWD) Bell Housing To Differential (3.420"OD)(3.010"ID) (.665"Tall) (KOYO STA6087) 2003-Up	1-2	
203292A	Cone Bearing, RE0F09A/F09B Differential To Bell Housing (1.722"ID)(23 Rollers)(Cast # KOYO STA4575-1) 2003-Up (Also Fits RE0F09A/F09B Differential To Case # 289 2003-Up)	1-2	
203292AA	Bearing, RE0F09A/09B (AWD) Roller Differential To Bell Housing (30 Rollers)(2.360"ID) (KOYO STA6087) 2003-Up	1-2	

PART #	GASKETS & RUBBER COMPONENTS	QTY	REFERENCE #
203300A	Gasket, RE0F09A/F09B Bottom Pan (Metal With Bonded Paper)(20 Bolt Holes) 2003-Up	1	
203310A	Gasket, RE0F09A/F09B Pump Stator To Case (Metal) 2003-Up	1	
203311A	O-Ring, RE0F09A/F09B Pump Body (.115"Thick)(6 7/8"OD) 2003-Up	1	
203380A	O-Ring, RE0F09A/F09B Input Shaft (Front)(.070"Thick)(.955"OD) 2003-Up	1	

PART #	ELECTRICAL COMPONENTS	QTY	REFERENCE #
203410A	Park/Neutral Switch, RE0F09A/F09B (With TFT)(Cast # PA66-GF30)(7 Prong Connector) 2003-Up	1	
203414A	Sensor, RE0F09A/F09B Secondary Pressure (A-FPS A)(3 Prong Connector) (Also Fits RE0F09A Primary Pressure (FPS B) #415 Screws Into Case Inside Bottom Pan)(Also Fits RE0F10A (JF011E) Primary & Secondary Switch 2007-09)	1	
203415A	Use 203414A.	1	
203425A	Solenoid, RE0F09A TCC (2 Blade Connector)(1 Bolt Plastic Bracket) 2003-Up	1	
203425AA	Solenoid, RE0F09A TCC (2 Blade Connector)(1 Bolt Metal Bracket) 2003-Up	1	
203428A	Use 203435A.	1	
203428AA	Use 203435AA	1	
203430A	Solenoid, RE0F09A Lock-up Select (1 Bolt Metal Bracket) 2003-Up	1	
203435A	Solenoid, RE0F09A Line Pressure B (Cast # 06Z05-2) 2003-Up (Also Fits REOFO9A Line Pressure A # 428 2003-Up)	1-2	
203435AA	Solenoid, RE0F09A Line Pressure B (Cast # Bosch 0 260 130 030 On Plastic Connector) 2003-Up (Also Fits RE0F09A Line Pressure A # 428 2003-Up)	1-2	
212436A	Sensor, RE0F09A/F09B ISS/OSS/ Primary Pulley (90 Degrees)(3 Pin Oval Connector) (2.220"Tall)(.660"OD On Top Of Bell Over Differential) 2003-Up	1	
203436-1A	Shim, RE0F09A/F09B Sensor To Bell Housing (.039"Thk)(.545"OD) (.260"ID) 2003-Up (Also Fits 20 Series Honda B7XA Only) (Also Fits RE0F10A(JF0111E) 2007-09)(Also Fits RE0F10D (JF016E) 2013-Up)	1	

© Whatever It Takes Transmission Parts. Inc.

PART #	ELECTRICAL COMPONENTS (Continued)	QTY	REFERENCE #
203446-1AA	Wire Harness, RE0F09A/F09B Internal (2 Piece Type)(22 Prong Case Connector, With 1 Twenty Three Wire Connector & 1 Three Wire Connector) 2003-Up (This Goes With 203446AA)	1	

PART #	MISCELLANEOUS COMPONENTS	QTY	REFERENCE #
203446A	Wire Harness, RE0F09A/F09B Internal (1 Piece Type)(22 Prong Case Connector, With 4 Two Prong Connectors, 2 Three Prong Connectors, 1 Five Prong Connector, 1 Six Prong Connector, 1 Seven Prong Connector & Primary Speed Sensor, With 3 Ground Straps) 2003-Up	1	
203446AA	Wire Harness, RE0F09A/F09B Internal (2 Piece Type) 23 Prong HarnessConnector, 4 Two Prong Connectors, 1 Three Prong Connectors, 1 Five Prong Connectors, 1 Six Prong Connectors, 1 Seven Prong Connector, & Primary Speed Sensor, With 3 Ground Straps) 2003-Up (This Goes With 203446-1AA)	1	
203452A	Ratio Control Motor, RE0F09A/F09B (Stepper Motor)(6 Prong Connector)(Cast # SM01 3128) (With 2 Bolt Bracket) 2003-Up	1	
203469A	ROM Assembly, RE0F09A/F09B (5 Prong Connector)(1.335”Wide Plastic Body, With 3 Metal Tabs That Holds Metal Bracket On) 2003-Up	1	
203469AA	ROM Assembly, RE0F09A/F09B (5 Prong Connector)(1.405” Wide Plastic Body, With 4 Metal Tabs That Holds Metal Bracket On) 2003-Up	1	
203492A	Drain Plug, RE0F09A/F09B Bottom Pan (19MM Hex Head)(Fits Steel Pan) 2003-Up	1	
203492AA	Drain Plug, RE0F09A/F09B Bottom Pan (10MM Allen Head)(Fits Aluminum Pan) 2003-Up (Also Fits RE0F09A/F09B Rear Plug # 493 2003-Up)	1-2	

PART #	HARDPARTS	QTY	REFERENCE #
203493A	Use 203492AA	1	
203500A	Pump Assembly, RE0F09A/F09B (Cast # 6Y17 On Cover) 2003-Up	1	
203507PK	Valve Kit, RE0F09A/F09B (JF010E) Pump Flow Control (Fits Altima 3.5L 2007-12, Maxima 3.5L 2007-15, Murano 3.5L 2002-15, Quest 3.5L 2010-16)	1	
203510A	Pump Body, RE0F09A/F09B (Cover)(Cast Iron)(Cast # 6Y17) 2003-Up	1	
203510B	Pump Body, RE0F09A/F09B (Cover)(Cast Iron)(.110” Deep Lip To Center Body) 2003-Up	1	
203520A	Stator W/Gears, RE0F09A/F09B (Aluminum)(7 Bolts To Case) 2003-Up (Comes With Sonnax # S203741P-1 Oversized Pump Flow Control Valve Installed)	1	
203520B	Stator W/Gears, RE0F09A/F09B (Aluminum)(7 Bolts To Case) 2003-Up (Comes With Sonnax #S203741P-1 Oversized Pump Flow Control Valve Installed)(.140” Deep Step To Center Body)	1	
203530A	Pump Gear Set, RE0F09A/F09B (10 Teeth Inner, 11 Teeth Outer Gear)(.620”Thick)(3.760”OD) 2003-Up	1	
203547A	Spacer, RE0F09A/F09B Forward Clutch Cushion (.044”)(5.506”OD)(4.735”ID) 2003-Up (Used With U203853A)	1	
203554A	Drum, RE0F09A Forward Clutch (4 Clutch)(Uses 30 Teeth Steels)(.250” Between Snap Ring Grooves) 2003-Up	1	
203554B	Drum, RE0F09B Forward Clutch (4 Clutch)(Uses 30 Teeth Steels)(.350” Between Snap Ring Grooves) 2007-14	1	
203564A	Piston Kit, RE0F09A/F09B Forward Clutch (Contains: # 964, 974, 984, & 877) 2003-Up	1	
203566A	Piston Kit, RE0F09A/F09B Reverse Clutch (Contains: # 966, 976, 893)(Bonded Piston) 2003-Up	1	
203587A	Planet, RE0F09A Reverse (4 Gear)(40 Spline Clutch Hub)(2.330” Thick At Edge) 2003-Up	1	
203587B	Planet, RE0F09B Reverse (6 Gear)(40 Spline Clutch Hub)(2.110” Thick At Edge) 2003-Up	1	
203597A	Ring Gear, RE0F09A Reverse Planet (110 Teeth)(.730”Thick)(30 Outer Lugs) 2003-Up	1	
203597B	Ring Gear, RE0F09B Reverse Planet (90 Teeth)(.630”Thick)(30 Outer Lugs) 2007-14	1	
203617A	Sun Gear, RE0F09A Reverse Planet (82 Teeth)(3.730”OD Gear)(36 Spline Clutch Hub) 2003-Up	1	
203617B	Sungear, RE0F09B Reverse Planet (82 Teeth)(3.685”OD Gear)(36 Clutch Splines)(4.630”OD) (1.585”Tall) 2007-14	1	
203670A	Input Shaft, RE0F09A (8”Long) (Uses 3 Large & 2 Small Teflon Rings & 1 O-Ring) 2003-Up	1	
203670B	Input Shaft, RE0F09B (8”Long) (Uses 3 Large & 1 Small Teflon Rings & 1 O-Ring) 2003-Up	1	
203690A	Park Gear, RE0F09A/F09B (8 Outer Lugs)(.575”Thick)(3.115”OD) 2003-Up	1	
203691-2A	Guide Pin, RE0F09A/F09B Ratio Control Motor Follower (.390”OD)(5.725”Long) 2003-Up	1	
203691-3A	Spring, RE0F09A/F09B Ratio Control Motor Follower Return (1.615”Long) 2003-Up	1	
203691-4A	Spring Seat, RE0F09A/F09B Ratio Control Motor Follower Spring (.385”Thick)(.815”OD) 2003-Up		
203691A	Ratio Control Motor Follower, RE0F09A/F09B (Aluminum)(2.695”Long) 2003-Up	1	
203692A	Retainer, RE0F09A/F09B Holds Horse Shoe Clips In Secondary Pulley (.231”Thick)(2.623”OD) (2.443”ID)(Steel) 2003-Up	1	
203693A	Bracket, RE0F09A/F09B Holds Bearing # 228 To Bell Housing (1 Bolt)(.115”Thick)(1.400”Long) (1.610”Wide) 2003-Up	1	
203693B	Bracket, RE0F09A/F09B Holds Bearing # 228 To Bell Houisng (2 Bolt)(.098”Thick)(4.010”Long) (2.238”Wide) 2003-Up	1	
203694A	Bracket, RE0F09A/F09B Holds Bearing # 235 To The Rear Cover (3 Bolt)(2.380”ID) 2003-Up	1	

© Whatever It Takes Transmission Parts. Inc.

203695A ..... Retainer, RE0F09A/F09B Holds Horse Shoe Clips # 888 To Shaft (.245"Thick)(2.225"OD)(2.050"ID) 2003-Up 1
203696A ..... Bracket, RE0F09A/F09B Holds Bearing # 229 To The Rear Cover (3 Bolt)(3.950"ID) 2003-Up 1
203700A ..... Belt, RE0F09A/F09B (JF010E)(Nissan CVT) 2003-Up 1
203700D ..... Belt, RE0F09A/F09B Jeep (2.0/2.4L) 2007-11 1
203705A ..... Primary Pulley Half, RE0F09A/F09B With Shaft (7 5/8"Long)(7"OD)(Front Half) 2003-Up 1
203705-1A ..... Use 205705A-1 9
205705-1A ..... Steel Ball, RE0F09A/F09B Pulley Guides (.236"OD)(Primary Pulley Takes 9 Balls)(Secondary Pulley Takes 12 Balls) 2003-Up 9-21
203706A ..... Secondary Pulley Half, RE0F09A/F09B (3.130"Thick)(7"OD)(Front Half) 2003-Up 1
203707A ..... Primary Pulley Half, RE0F09A/F09B (2.705"Thick)(7"OD)(Rear Half) 2003-Up 1
203708-1A ..... Use 205705A-1 12
203708A ..... Secondary Pulley Half, RE0F09A/F09B With Shaft (11 3/8"Long)(7"OD)(Rear Half) 2003-Up 1
203710A ..... Gear, RE0F09A/F09B Drive Transfer (28 Teeth)(3.080"OD)(Splined ID) 2003-Up 1
203710B ..... Gear, RE0F09A/F09B Drive Transfer (29 Teeth, 1 Groove)(3.080"OD)(Splined ID) 2003-Up 1
203712A ..... Gear, RE0F09A/F09B Driven Transfer (43 Teeth)(4.595"OD)(Splined ID) 2003-Up 1
203715A ..... Differential Assembly, RE0F09A/F09B (64 Teeth Ring Gear)(10 Bolt)(1.245"ID Axle Hole) 2003-Up 1
203716A ..... Differential Housing, RE0F09A/F09B (Less Ring Gear)(10 Bolt)(1.245"ID Axle Hole) 2003-Up 1
203716AA ..... Differential Housing, RE0F09A/09B (AWD) (10 Bolt Gear)(6 1/2"Tall) (Black Cross Pin) (2.340"OD Nose)(2 Windows) 2003-Up 1
203720A ..... Ring Gear, RE0F09A/F09B Differential (64 Teeth)(10 Bolt)(8 3/8"OD) 2003-Up 1
203730A ..... Pinion Shaft, RE0F09A/F09B (19 Teeth)(5.190"Long) 2003-Up 1
203740A ..... Valve Body, RE0F09A (With 4 Solenoids)(Cast # FYO#2A On The Solenoid Side) 2003-Up 1
203740AA ..... Valve Body, RE0F09A (With 4 Solenoids)(Cast # FYO#1B On The Solenoid Side) 2003-Up 1
203740B ..... Valve Body, RE0F09B (W/4 Solenoids)(Cast # 1XD01 On Solenoid Side, 1XE On Filter Side) 2007-14 1

PART #	VALVE BODY COMPONENTS	QTY	REFERENCE #

243741-1B ..... Manual Valve,RE0F09A/F09B(JF010E) For Valve Body (4.320"Long)(.470"OD)(.240"Between Lands) (1/2 Round With .160"hole) 2007-Up 1
S203741CK .... Vavle Kit, RE0F09A/F09B(JF010E)/RE0F10A(JF011E) Lock Up Control Plunger (Contains: Sleeve & Valve) 2003-15 (Sonnax) 1
S203741ALK .. Vavle Kit, RE0F09A/F09B Solenoid Valve(Contains: Valve, Sleeve & Spring) 2003-Up (Sonnax) 1
S203741COSK .. Valve Kit, RE0F09A/F09B(JF010E) Torque Converter Regulator (Oversized) (Contains Valve, Spring & End Plug)(Must Use T-F-113741-TL13) 1
S203741FOSK .. Valve Kit, RE0F09A (JF010E) TCC Limit & Lube Valve Kit (Oversized) (Contains Valve, Spring & End Plug)(Must Use T-F-113741-TL4) 1
T-F-113741-TL4 .... Reamer for S203741FOSK 1
S203741P-1 .... Valve, RE0F09A/F09B (JF010E) Pump Flow Control (Oversized)(Must Use Tool T-F-113741-TL7C & T-VB-Fix) 1
T-F-113741-TL7C . Reamer For S203741P-1 1

PART #	HARDPARTS (Continued)	QTY	REFERENCE #

203750A ..... Bell Housing, RE0F09A (3" Top Bolts)(Cast # VQ2 & ACO)(Uses A 1 Bolt Bracket # 693) 2003-Up 1
203750AA ..... Bell Housing, RE0F09A (AWD) (3" Top Bolts)(Cast # VQ4 & ACO) (26 Bolts To Case)(1 Bolt Bracket)(2 Bolt Mount For Starter Open At 9:30) 2003-Up 1
203750B ..... Bell Housing, RE0F09B (3" Top Bolts)(Cast # VQ2 & AKO) (Uses A 2 Bolt Bracket # 693) 2007-14 1
203750BA ..... Bell Housing, RE0F09B (AWD) (26 Bolts)(3" Top Bolts)(2 Bolt Bracket)(Cast # VQ4 & AKO) (4 Bolt Mount At Starter Opening At 9:30) 2007-14 1
203759A ..... Rear Cover, RE0F09A/F09B (Aluminum)(18 Bolt)(Cast # AKO #1) 2003-Up 1
203759AA ..... Rear Cover, RE0F09A/F09B (Alum)(18 Bolt)(Cast # ACO) 2003-Up (Has A Oil Feed Shaft W/2 Teflon Rings For The Secondary Pulley) 1
203759AAK .... Rear Cover W/Pulley Assembly, RE0F09A/F09B (18 Bolt Rear Cover)(Cast # ACO)(With 28 Teeth Drive Transfer Gear)(Includes Part #'s 700, 705, 706, 707, 708 & 759) 2003-Up 1
203759BK ..... Rear Cover W/Pulley Assembly, RE0F09A/F09B (18 Bolt Rear Cover)(Cast # YO)(With 29 Teeth Drive Transfer Gear)(Includes Part #'s 700, 705, 706, 707, 708 & 759) 2003-Up 1
203760A ..... Case, RE0F09A (Cast # ACO # 2) (2 Big Bosses By The Cooler Are 3 1/4" Apart) 2003-Up 1
203760B ..... Case, RE0F09B (Cast # AKO # 3) (2 Big Bosses By The Cooler Are 2" Apart) 2007-14 1
203765A ..... Pan, RE0F09A/F09B Bottom (Steel) 2003-Up 1
203765AA ..... Pan, RE0F09A/F09B Bottom (Aluminum) 2003-Up 1
203776AK ..... Bolt Set, RE0F09A/F09B Bell Housing To Case (27 Pieces) 2003-Up 1
203776AAK .... Bolt Set, RE0F09A/09B (AWD) Bell Housing To Case (26 Pieces)(14mm x 1.505" Long) 2003-Up 1
203777AK ..... Bolt Set, RE0F09A/F09B Stator To Case (7 Pieces) 2003-Up 1
203778AK ..... Bolt Set, RE0F09A/F09B Pump Body To Stator (8 Pieces) 2003-Up 1
203779AK ..... Bolt Set, RE0F09A/F09B Bottom Pan (20 Pieces)(Fits Steel Pan) 2003-Up 1

© Whatever It Takes Transmission Parts. Inc.

PART #	HARDPARTS (Continued)	QTY	REFERENCE #
203779AAK	Bolt Set, RE0F09A/F09B Bottom Pan (20 Pieces)(Fits Aluminum Pan) 2003-Up	1	
203781AK	Bolt Set, RE0F09A/F09B Rear Cover To Case (18 Pieces) 2003-Up	1	
203783AK	Bolt Set, RE0F09A/F09B Holds Bearing Retainer # 696 To Rear Cover (3 Pieces) 2003-Up	1	
203786AK	Bolt Set, RE0F09A/F09B Differential Ring Gear To Housing (10 Pieces) 2003-Up	1	
203790AK	Bolt Set, RE0F09A/F09B Holds Bearing Retainer # 694 To Rear Cover (3 Pieces) 2003-Up	1	
203791AK	Bolt Set, RE0F09A/F09B Valve Body To Case (11 Pieces) 2003-Up	1	
203793AK	Bolt Set, RE0F09A/F09B Filter (10 Pieces) 2003-Up	1	
203794AK	Bolt Set, RE0F09A/F09B Holds Park Rod Detent In (2 Pieces) 2003-Up	1	
203795A	Nut, RE0F09A/F09B Holds Bearing # 235 To Primary Pulley Shaft (46mm)(.275"Thick)(1.140"ID) 2003-Up	1	
203796A	Nut, RE0F09A/F09B Pinion Shaft (32mm)(.730"Thick)(1.442"OD) 2003-Up	1	
203797-1A	Nut, RE0F09A/F09B Holds Drive Transfer Gear To Secondary Pulley Shaft (50mm)(.470"Thick) (1.220"ID) 2003-Up	1	
203797A	Nut, RE0F09A/F09B Holds Bearing # 229 To Secondary Pulley Shaft (55mm)(.327"Thick) (1.730"ID) 2003-Up	1	
203799-1A	Jam Nut, RE0F09A/F09B Holds Manual Lever Nut On Shaft (14mm)(.320"Thick) 2003-Up	1	
203799A	Nut, RE0F09A/F09B Holds Lever On Manual Shaft (19mm)(.320"Thick) 2003-Up	1	
203853A	Cushion, RE0F09A/F09B Forward Clutch (.057")(5.506"OD)(4.740"ID)(Dished) 2003-Up (Used With U203547A Spacer)(Takes 1)	1	
203853AA	Cushion, RE0F09A/F09B Forward Clutch (.070")(5.506"OD)(4.740"ID)(Waved) 2003-Up (Takes 2, Does Not Use # 547)	2	
203860A	Snap Ring, RE0F09A/F09B Holds The Steel Ball Pulley Guides In The Secondary Pulley (.099"Thick)(2.334"OD) 2003-Up	1	
203861A	Snap Ring, RE0F09A/F09B Holds The Steel Ball Pulley Guides InThe Primary Pulley (.091"Thick)(2.043"OD) 2003-Up	1	
203862A	Snap Ring, RE0F09A/F09B Internal (.092"Thick)(2.038"OD) 2003-Up	1	
203872A	Snap Ring, RE0F09A/F09B Holds Bearing # 236 To The Primary Pulley Shaft (Hidden) (.078"Thick)(2.685"OD) 2003-Up	1	
203876A	Snap Ring, RE0F09A/F09B Holds Forward Clutch Pressure Plate In Drum (Selective) (5.845"OD) 2003-Up	1	
203877A	Snap Ring, RE0F09A/F09B Holds Forward Clutch Spring Retainer In Drum (.039"Thick) (2.820"OD) 2003-Up	1	
203880A	Snap Ring, RE0F09A/F09B Holds Input Shaft To Forward Clutch Drum (.047"Thick)(1.062"OD) 2003-Up	1	
203887A	Horse Shoe Clips, RE0F09A/F09B Holds Secondary Pulley Piston In Secondary Pulley Front Half (.236"Thick)(2.436"Long)(2 Pieces) 2003-Up	1	
203888A	Horse Shoe Clips, RE0F09A/F09B Primary Pulley Shaft (Rear)(.263"Thick)(2.042"Long) (2 Pieces) 2003-Up	1	
203889A	Snap Ring, RE0F09A/F09B Holds Ring Gear To Forward Drum (.070"Thick)(5.930"OD) 2003-Up	2	
203892A	Snap Ring, RE0F09A/F09B Holds Reverse Clutch Pressure Plate In (Selective)(.094"Thick) (7 3/4"OD) 2003-Up	1	
203892AA	Snap Ring, RE0F09A/09B (AWD) Holds Reverse Clutch Pressure Plate In (Selective)(.082"Thick) 2003-Up		
203893A	Snap Ring, RE0F09A/F09B Holds Reverse Clutch Spring Retainer In (.070"Thick)(7 9/16"OD) 2003-Up	1	
203899A	Snap Ring, RE0F09A/F09B Holds Retainer In Front Secondary Pulley Half (.083"Thick)(6 5/16"OD) 2003-Up	1	
203960A	Piston, RE0F09A/F09B Secondary Pulley (2.366"Thick)(5.859"OD)(1.770"ID)(Steel) 2003-Up	1	
203960AK	Piston Kit, RE0F09A/F09B (CVT) FWD/AWD (Bonded) 2003-Up (Hi-Per Blue)	1	
203964A	Piston, RE0F09A/F09B Forward Clutch (Aluminum)(.872"Thick)(5.510"OD)(2.775"ID)(20 Spring Pockets) 2003-Up	1	
203966A	Piston, RE0F09A/F09B Reverse Clutch (Bonded)(1.830"Thick)(7"OD)(4.970"ID)(24 Spring Studs) 2003-Up	1	
203970-1A	Spring Seat, RE0F09A/F09B Secondary Pulley Piston Return Spring (3.577"OD)(3.009"ID) 2003-Up	1	
203970A	Coil Spring, RE0F09A/F09B Secondary Pulley Piston Return Spring (4.175"Long)(3.429"OD) 2003-Up	1	
203971A	Coil Spring, RE0F09A/F09B Primary Pulley Piston Return Spring (3.168"Long)(3.177"OD) 2003-Up	1	
203974A	Spring & Retainer, RE0F09A/F09B Forward Clutch Return (1.286"Thick)(3.957"OD)(20 Springs) 2003-Up	1	
203976A	Spring & Retainer, RE0F09A/F09B Reverse Clutch Return (1.095"Thick)(7 1/16"OD) 2003-Up	1	
203980A	Retainer, RE0F09A/F09B Secondary Pulley Piston (2.500"Thick)(5.949"OD)(2.000"ID)(Steel) 2003-Up	1	
203981A	Piston/Retainer, RE0F09A/F09B Primary Pulley (1.694"Thick)(6.214"OD)(1.530"ID)(Steel) 2003-Up	1	

© Whatever It Takes Transmission Parts. Inc.

203984A .....Retainer/Piston, RE0F09A/F09B Forward Clutch Spring (Bonded)(.895”Thick)(5.045”OD)
.....(2.715”ID) 2003-Up .....1 .....
203991-1A.....Lever, RE0F09A/F09B Manual Shaft To Valve Body (1.150”Long) 2003-Up.....1 .....
203991-2A.....Detent Spring, RE0F09A/F09B Rooster Comb (1 Bolt)(3.495”Long) 2003-Up.....1 .....
203991-3A.....Rooster Comb, RE0F09A/F09B (With 5 Detents)(.475”ID Hole) 2003-Up .....1 .....
203991-4A.....Manual Shaft, RE0F09A/F09B (15 3/4” Long)(.460”OD) 2003-Up .....1 .....
203991-5A.....Pin, RE0F09A/F09B Holds Manual Shaft In Place (.156”OD)(1.980”Long) 2003-Up.....1 .....
203991-6A.....Detent, RE0F09A/F09B Park Rod Actuator (2 Bolt) 2003-Up.....1 .....
203991-8A.....Sleeve, RE0F09A/F09B Manual Shaft To Valve Body (.510”Thick)(.590”OD)(.475”ID) 2003-Up...1 .....
203994A .....Park Rod Actuator, RE0F09A/F09B (1.470”Long) 2003-Up.....1 .....
203995A .....Park Pawl Assembly, RE0F09A/F09B (Contains: # 995-1, 995-2, 995-3 & 995-6) 2003-Up .....1 .....
203998A .....Cooler, RE0F09A/F09B Transmission External (Steel)(On Rear Of Case) 2003-Up.....1 .....
203998AA.....Cooler, RE0F09A/F09B Transmission External (Aluminum)(On Rear Of Case) 2003-Up.....1 .....
203999-1A.....Oil Tube, RE0F09A/F09B Bolt To The Rear Of Case (1 Bolt)(3.860”Long) 2003-Up.....1 .....
203999-6A.....Oil Tube, RE0F09A/F09B On Bell Housing For Front Pinion Bearing Lube (Copper)(.250”OD)
.....(Tips Are 6 3/4” Apart) 2003-Up .....1 .....

© Whatever It Takes Transmission Parts. Inc.

RE0F10A (1XF / 1XT / 3UX)

CVT FWD

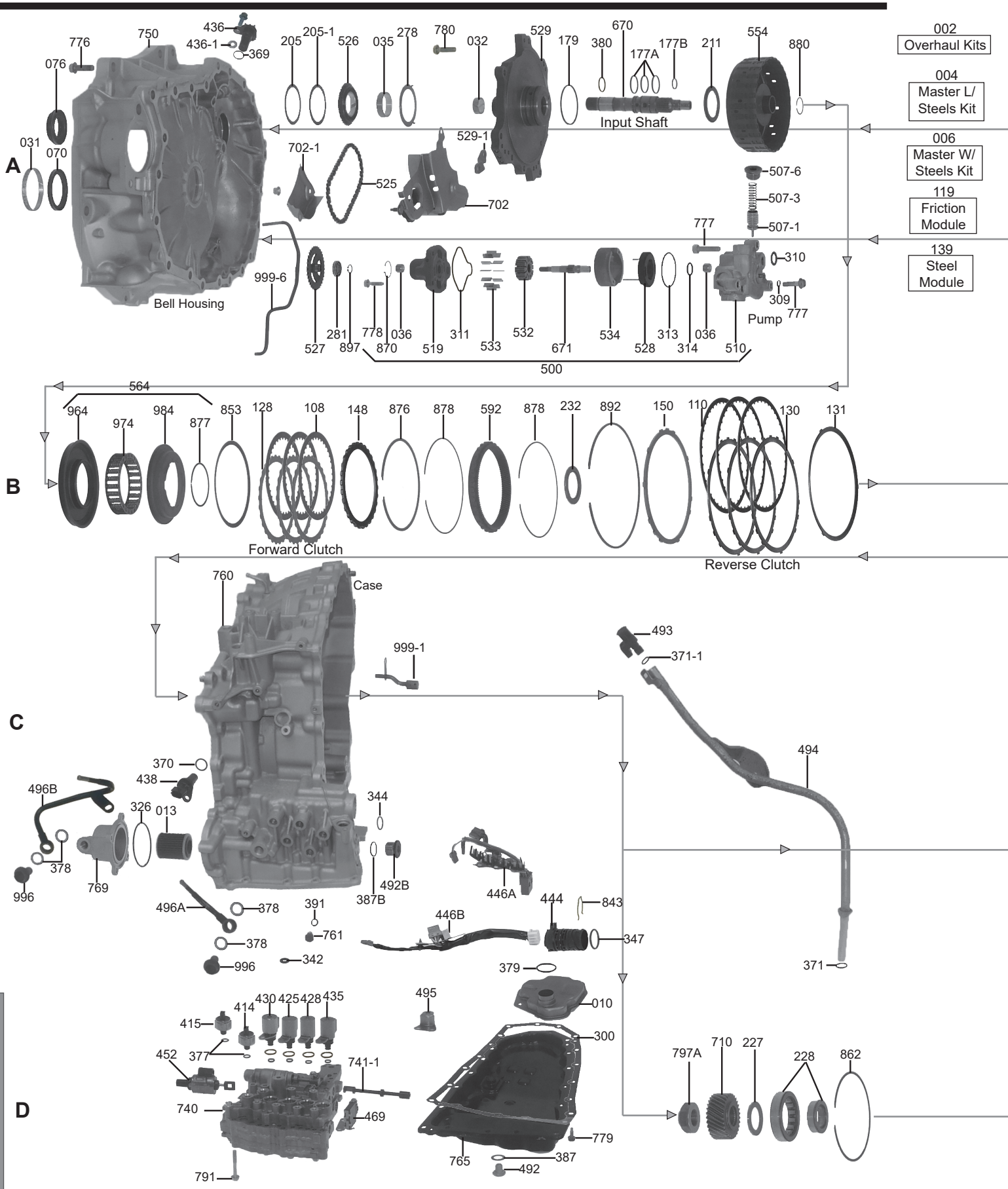

NISSAN

© Whatever It Takes Transmission Parts. Inc.

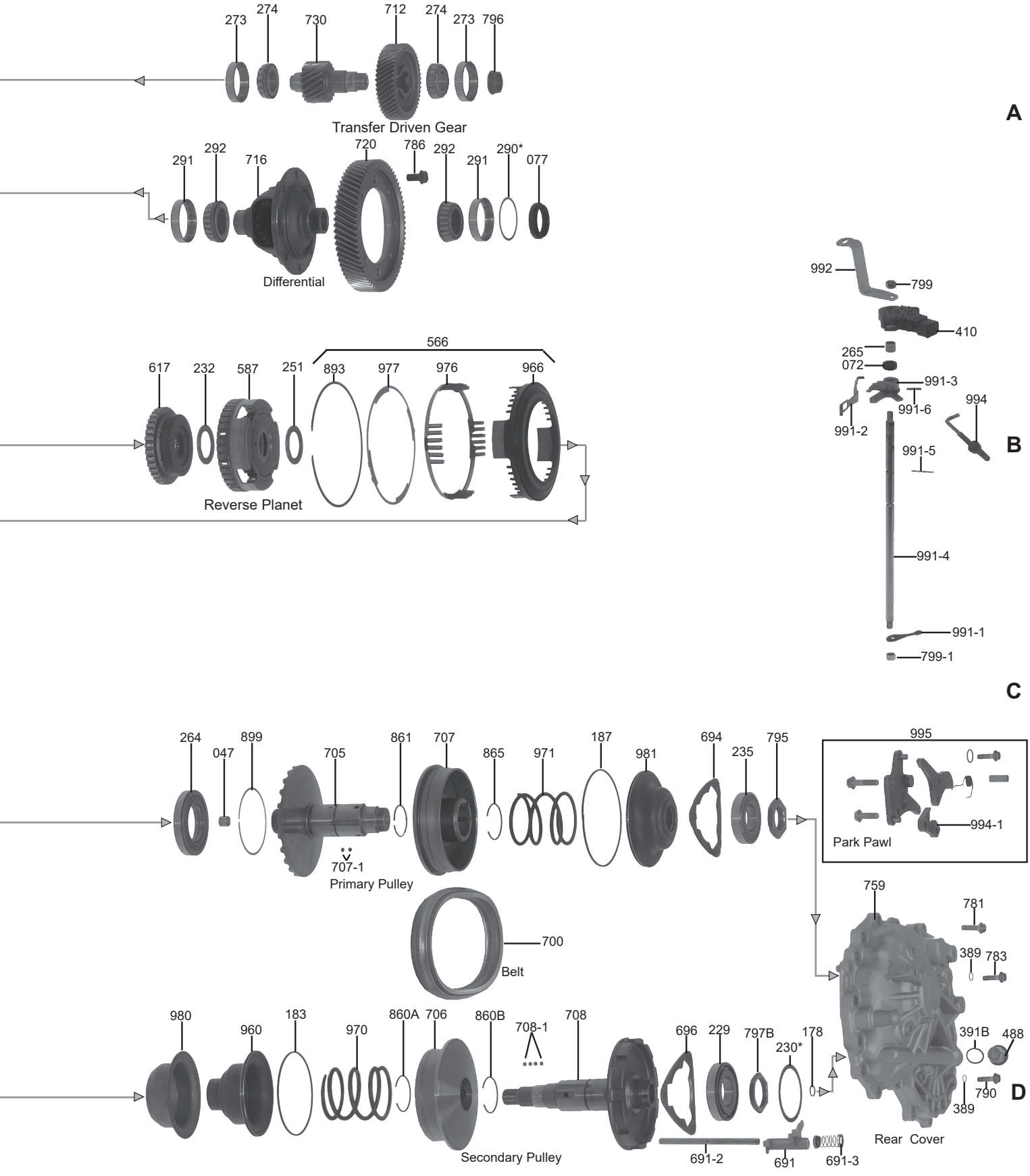

1-800-940-0197

© Whatever It Takes Transmission Parts. Inc.

PART #	OVERHAUL KITS	QTY	REFERENCE #
212002A	Overhaul Kit, RE0F10A (JF011E) 2007-Up (CVT FWD)(Dodge/Jeep/Nissan/Mitsubishi/Renault/Suzuki)	1	
212002AFP	Overhaul Kit, RE0F10A (JF011E) 2007-UP (CVT FWD)(Dodge/Jeep/Nissan/Mitsubishi/Renault/Suzuki) (With Pistons)	1	
212002BF	Overhaul Kit, RE0F10B 2011-Up	1	

PART #	MASTER L/STEELS KIT	QTY	REFERENCE #
212004A	Master L/Steels Kit, RE0F10A (JF011E) 2007-Up (CVT FWD)(Dodge/Jeep/Nissan/Mitsubishi/Renault/Suzuki)(For Bonded Pistons Sell A212960AK)	1	

PART #	MASTER W/STEELS KIT	QTY	REFERENCE #
212006A	Master W/Steels Kit, RE0F10A (JF011E) 2007-Up (CVT FWD)(Dodge/Jeep/Nissan/Mitsubishi/Renault/Suzuki)(For Bonded Pistons Sell A212960AK)	1	

PART #	FILTERS	QTY	REFERENCE #
212010A	Filter, RE0F10A/F10B(JF011E) Chrysler/Mitsubishi/Nissan 2007-Up (CVT2)(.580"Tall Square Pick-Up)	1	31728-1XZ0A
212010B	Filter, RE0F10A(JF011E) Nissan 2007-Up (.910"Tall Square Pick-Up)(3 Bolt)	1	31728-1XZ0A
212013A	Cartridge Filter, RE0F10A (JF011E)(Nissan)(Under Cooler) (2.485"Tall)(1.435"OD)	1	
212013B	Cartridge Filter, RE0F10A (JF011E)(Nissan)(Under Cooler) (1.915"Tall)(1.705"OD)	1	

PART #	BUSHINGS	QTY	REFERENCE #
212030	Bushing Kit, RE0F10A/F10B (JF011E) (6 Pieces) 2007-14	1	
212030A	Bushing Kit, RE0F010A/F10B/ F10D/F10E 2007-Up (5 Pieces)	1	
212031A	Bushing, RE0F10A Converter Hub (1.440"ID)(Smooth) 2007-Up	1	
212032A	Bushing, RE0F10A (JF011E) (Nissan/Dodge) Converter Reactor (1.040"OD)(.920"ID)(.400"Wide)(Babbit)(2 Grooves) 2007-Up	1	
212034A	Bushing, RE0F10A (JF011E) Pump Body 2007-Up	1	
212035A	Bushing, RE0F10A (JF011E) (Nissan/Dodge) Pump Drive Sprocket To Converter Reactor (1.440"ID)(1.623"OD)(Babbit) (2 Grooves) 2007-Up	1	
323036A	Bushing, RE0F10A (JF011E)(Nissan/Dodge) Pump Cover Shaft & Shaft To Pump Body (.395"ID)(.475"OD)(.500"Wide) 2007-Up	2	
212047A	Bushing, RE0F10A (JF011E) (Nissan/Dodge) Primary Pulley To Input Shaft (.550"OD)(.540"Long)(Babbitt W/ Oil Pockets) 2007-Up	1	

PART #	METAL CLAD SEALS	QTY	REFERENCE #
212070A	Seal, RE0F10A/F10B (JF011E) (Nissan /Dodge) Front (Pump) 2007-Up	1	
60072	Seal, RE0F10A/F10B (JF011E) Manual Shaft (.275"Thick)(.875"OD)(In Bell Housing)	1	
83076A	Seal, RE0F10A/F10B (JF011E) (Nissan/Dodge) Axle (Bell Housing Side) 2007-Up	1	38342-31X01
83076AA	Seal, RE0F10A (JF011E) (Nissan/Dodge) Axle (Case Side) 2007-Up	1	38342-31X00
212076C	Seal, RE0F10A (JF011E) (4WD) Transfer Case To Bell Housing 2008-UP	1	
212077A	Seal, RE0F10A (JF011E) (Nissan/Dodge) Case To Differential (2.210"OD)(1.530"ID)(NOK AH2365H)(.320"/.525"Thick) 2007-Up	1	

PART #	FRICTIONS	QTY	REFERENCE #
203108A	Friction, RE0F10A/F10B (JF011E) (Nissan/Dodge) Forward Clutch (.061"Thick)(36 Teeth)(5.430"OD) 2007-Up	3	31532-1XD00
203110A	Friction, RE0F10A/F10B (JF011E) (Nissan/Dodge) Reverse Clutch (.062" Thick)(40 Teeth)(7 1/16"OD) 2007-Up	3	31532-1XD02
212119A	Friction Module, RE0F10A/F10B (JF011E) 2007-Up	1	

PART #	STEELS	QTY	REFERENCE #
212128A	Steel, RE0F10A (JF011E) (Nissan/Dodge) Forward Clutch (.050"Thick)(30 Teeth)(4.725"ID)(5.700"OD) 2007-Up	3	
203130A	Steel, RE0F10A/F10B (JF011E) (Nissan/Dodge) Reverse Clutch (.054" Thick)(12 Teeth)(6 7/16"OD) 2007-Up	3	31666-1XD00
212131A	Cushion, RE0F10A (JF011E) (Nissan/Dodge) Reverse Clutch (.075"Thick)(4 Teeth)(6 7/16"ID)2007-Up	1	
212139A	Steel Module, RE0F10A (JF011E) 2007-Up	1	

© Whatever It Takes Transmission Parts. Inc.

PART #	PRESSURE PLATES	QTY	REFERENCE #
203148A	Pressure Plate, RE0F10A (JF011E) (Nissan/Dodge) Forward Clutch (Top)(.140" Thick) (30 Teeth)(4.719"ID) 2007-Up	1	
212150A	Pressure Plate, RE0F10A (JF011E) (Nissan/Dodge) Reverse Clutch (Top) (6.455"ID)(.145"Thick) (12 Teeth) 2007-Up	1	

PART #	OIL SEALING RINGS	QTY	REFERENCE #
212175A	Ring Kit, RE0F10A (JF011E) 2006-Up	1	
212177AT	Ring, RE0F10A (JF011E) (Nissan/Dodge) Input Shaft (Teflon) (Butt Joint)(1.120"OD)(.070"Thick) 2007-Up	3	
212177BT	Ring, RE0F10A (JF011E) (Nissan/Dodge) Input Shaft (Rear)(Teflon)(.670"OD)(.065"Thick) 2007-Up	1	
212178AT	Ring, RE0F10A (JF011E) (Nissan/Dodge) Secondary Pulley To Rear Cover (.665"OD)(Teflon) (Solid)(Black) 2007-Up	1	
212179A	Ring, RE0F10A (JF011E) (Nissan/Dodge) Converter Reactor (2.515"OD)(.085"Wide) 2007-Up	1	
212183AT	Ring, RE0F10A (JF011E) (Nissan/Dodge) Secondary Pulley Piston (.105"Thick)(5.150"OD) (Teflon) 2007-Up	1	
212187A	Ring, RE0F10A (JF011E) (Nissan/Dodge) Pulley Piston (5.860"OD)(.103"Thick) 2007-Up	1	

PART #	WASHERS & BEARINGS	QTY	REFERENCE #
212205A	Spacer/Shim, RE0F10A (JF011E) (Nissan/Dodge) Bell To Pump Drive Sprocket (Front) (.023"Thick)(2.523"OD)(2.080"ID) 2007-Up	1	
212205-1A	Spacer/Shim, RE0F10A (JF011E) (Nissan/Dodge) Bell To Pump Drive Sprocket (Rear) (.035"Thick)(2.523"OD)(2.080"ID) 2007-Up	1	
212211A	Bearing W/Races, RE0F10A (JF011E) (Nissan/Dodge) Converter Reactor To Drum (2.315"OD) (1.640"ID)(.160"Thick) 2007-Up	1	
212227A	Spacer, RE0F10A (JF011E) Inner Race To Drive Transfer Gear (2.120"OD)(1.415"ID)(.125"Thick) 2007-Up	1	
212228A	Bearing W/Races, RE0F10A (JF011E) Drive Transfer On Secondary Pulley (14 Rollers) (3.145"OD)(KOYO RNU208-3)(Removable Race) 2007-Up	1	
212229A	Ball Bearing, RE0F10A (JF011E) (Nissan/Dodge) Secondary Pulley (Rear)(.665"Thick) (3.540"OD)(1.770"ID)(13 Balls)(NSK B45-106) 2007-Up	1	
S212229AK	Bearing Set, RE0F10A (JF011E) Primary & Secondary Pulley (Contains 3 Bearings # 229, 235, & 236) 2007-Up (Sonnax)	1	
212230A	Shim, RE0F10A (JF011E) (Nissan/Dodge) Secondary Pulley Bearing To Rear Cover (3.525"OD) (2.995"ID)(Selective) 2007-Up	1	
212232A	Bearing W/ Races, RE0F10A (JF011E) (Nissan Dodge) Drum To Sungear (.150"Thick) (2.390"OD)(1.580"ID) 2007-Up (Also Fits RE0F10A (JF011E) Reverse Sungear To Reverse Planet 2007-Up)	1-2	
212235A	Ball Bearing, RE0F10A (JF011E) (Nissan/Dodge) (Rear) (3.145"OD)(1.575"ID)(.625"Thick) (NSK 40T018) 2007-Up	1	
212264A	Ball Bearing, RE0F10A (JF011E) (Nissan/Dodge) Primary Pulley (Front)(3.975"OD)(2.360"ID) (NSK ANX1UR BOTM04) 2007-Up	1	
212265A	Spacer, RE0F10A (JF011E) (Nissan/Dodge) Seal To PRNDL Switch (Steel)(.590"OD)(.475"ID) (.512"Thick) 2007-Up	1	
212273A	Race, RE0F10A (JF011E) (Nissan/Dodge) Pinion To Bell (Tapered)(2.440"OD)(1.983"ID) (.550"Thick)(KOYO 30206J) 2007-Up (Also Fits RE0F10A (JF011E) Pinion To Case 2007-Up).	1-2	
212274A	Bearing, RE0F10A (JF011E) (Nissan/Dodge) Pinion To Bell (Tapered)(1.180"ID)(16 Rollers) (KOYO 30206JR) 2007-Up (Also Fits RE0F10A (JF011E) Pinion To Case 2007-Up)	1-2	
212278A	Washer, RE0F10A (JF011E) (Nissan/Dodge) Drive Sprocket To Converter Reactor (3 Tabs) (2.675"OD)(2.010"ID)(.050"Thick)(4 Grooves)(Babbit) 2007-Up	1	
212281A	Use 323281A.	1	
212290A	Shim, RE0F10A (JF011E) (Nissan/Dodge) Differential To Case (Selective) 2007-Up	1	
212291A	Race, RE0F10A (JF011E) (Nissan/Dodge) Differential To Bell (2.675"OD)(.570"Thick)(2.250D) (NTF 32008XJG) 2007-Up (Also Fits RE0F10A (JF011E) Differential To Case 2007-Up)	1-2	
212292A	Bearing, RE0F10A (JF011E) (Nissan/Dodge) Differential To Bell (Tapered)(1.575"OD) (22 Rollers)(NTF 32008XJG) 2007-Up (Also Fits RE0F10A (JF011E) Differential To Case 2007-Up)	1-2	

PART #	GASKETS & RUBBER COMPONENTS	QTY	REFERENCE #
212300AW	Gasket, RE0F10A/F10B (JF011E) Chrysler/Mitsubishi Pan 2007-Up (18 Bolt Holes) (2 Pin Holes)	1	
212300BW	Gasket, RE0F10A (JF011E) Nissan Pan 2007-Up (19 Bolt Holes)(2 Pin Holes)	1	
212309A	O-Ring, RE0F10A (JF011E) (Nissan/Dodge) Pump Bolt To Case (.430"OD)(.070"Thick) 2007-Up	1	

© Whatever It Takes Transmission Parts. Inc.

PART #	GASKETS & RUBBER COMPONENTS (Continued)	QTY	REFERENCE #
212310A	Seal, RE0F10A (JF011E) (Nissan/Dodge) Pump To Case (.790"OD)(.460"ID)(.095"Thick) 2007-Up	1	
212311A	O-Ring, RE0F10A (JF011E) (Nissan/Dodge) Pump Cover To Body (Molded)(7 Bends) (.090"Thick) 2007-Up	1	
323313A	O-Ring, RE0F10A (JF011E) (Nissan/Dodge) Rear Pump To Body (Outer) 2007-Up	1	
323314A	O-Ring, RE0F10A (JF011E) (Nissan/Dodge) Rear Pump To Body (Inner) 2007-Up	1	
212326A	O-Ring, RE0F10A (JF011E) (Nissan/Dodge) Cooler Filter Housing To Case (2.760"OD) (.125"Thick) 2007-Up	1	
212342A	Transfer Seal, RE0F10A (JF011E) (Nissan/Dodge) Valve Body To Case (Rubber)(.125"Thick) (.630"OD)(.330"ID) 2007-Up	1	
212344A	O-Ring, RE0F10A (JF011E) (Nissan/Dodge) Rear Cover To Case Transfer (.065"Thick)(.860"OD) 2007-Up	1	
212347A	O-Ring, RE0F10A (JF011E) (NIssan/Dodge) Case Connector To Case (1.320"OD)(.140"Thick) 2007-Up	1	
212369A	O-Ring, RE0F10A (JF011E) (Nissan/Dodge) Output Speed Sensor To Bell (.690"OD)(.080"Thick) 2007-Up	1	
212370A	O-Ring, RE0F10A (JF011E) (Nissan/Dodge) Input Speed Sensor To Case (.695"OD)(.080"Thick) 2007-Up	1	
212371A	O-Ring, RE0F10A (JF011E) (Nissan/Dodge) Dipstick Tube To Case (.745"OD)(.100"Thick) 2007-Up	1	
212377A	O-Ring, RE0F10A (JF011E) (Nissan/Dodge) Primary Sensor To Valve Body 2007-Up (Also Fits RE0F10A (JF011E) Secondary Switch To Valve Body 2007-Up)	1-2	
212378A	Seal, RE0F10A (JF011E) (Nissan/Dodge) Oil Cooler To Case (Brass Or Copper)(.035"Thick) (.875"OD) 2007-Up	4	
212380A	O-Ring, RE0F10A (JF011E) (Nissan/Dodge) Input Shaft To Converter (.955"OD)(.070"Thick) 2007-Up	1	
212387A	Gasket, RE0F10A (JF011E) (Nissan/Dodge) Drain Plug To Pan (Copper)(.695"OD)(.510"ID) (.038"Thick) 2007-Up	1	
323387A	O-Ring, RE0F10A (JF011E) (Nissan/Dodge) Partial Drain Plug To Case (.100"Thick) 2007-Up	1	
212389A	O-Ring, RE0F10E (JF011E) (Nissan/Dodge) Rear Cover To Bearing Retainers (.455"OD) 2007-Up	1	
212391A	O-Ring, RE0F10A (JF011E) (Nissan/Dodge) Pressure Tap (.465"OD)(.085"Thick) 2007-Up	6	
212391B	O-Ring, RE0F10A(JF011E) (Nissan/Dodge) Pressure Plug To Rear Cover (.940"OD)(.080"Thick) 2007-Up	1	

PART #	TECHNICAL MANUALS	QTY	REFERENCE #
212400A	Tech Manual, RE0F10A (JF011E) 2007-Up (CVT FWD)(Dodge, Jeep Mitsubishi, Nissan)	1	

PART #	ELECTRICAL COMPONENTS	QTY	REFERENCE #
212410A	Switch, RE0F10A (JF011E) (Nissan/Dodge) PRNDL (8 Blade Rectangle Connector)(2 Bolts To Case)(All Plastic) (PA66-CGF-MD 7405) 2007-Up	1	
203414A	Sensor, RE0F10A/F10B (JF011E) (Nissan/Dodge) Primary & Secondary Pulley 2007-Up	2	
212425A	Solenoid, RE0F10A/F10B (JF011E) TCC Control "B" (06926-1) 2007-Up	1	
203428A	Solenoid, RE0F10A/F10B (JF011E) Line Pressure A & B 2007-Up	2	
212430A	Solenoid, RE0F10A/F10B (JF011E) (Nissan/Dodge) TCC L/Up Select (BC22DN) 2007-Up	1	
203435A	Solenoid, RE0F10A/F10B (JF011E) (Nissan/Dodge) Secondary Pressure #428 & Line Pressure #435 2007-Up	2	
212436A	Sensor, RE0F10A/F10B (JF011E) (Nissan/Dodge) Output Speed Sensor (90 Degrees) (3 Pin Oval Connector)(2.220"Tall)(.660"OD At O-Ring)(90 Degree) 2003-Up	1	
203436-1A	Shim, RE0F10A Sensor To Bell Housing (.039"Thick)(.545"OD)(.260"ID) 2007-09	1	
212438A	Sensor, RE0F10A/F10B (JF011E) (Nissan/Dodge) Input Speed (Straight)(In Case) (3 Pin Oval Connector)(2.910"Long) 2007-Up	1	
212446	Wire Harness, RE0F10A (JF011E) Internal (4 Black - 2 Blade Connectors, 1 Green - 3 Pin Connector, 1 Green - 6 Wire Connector, & Green 16 Pin Conn) 2007-Up (Fits Valve Body W/1 Pressure Switch)	1	
212446A	Wire Harness, RE0F10A (JF011E) (Nissan/Dodge) Internal (4 Black - 2 Blade Connector, 2 Green - 3 Pin Connector, 1 Green - 6 Wire Connector, & Green 16 Pin Connector) 2007-Up (Fits Valve Body W/2 Pressure Switches)	1	
212446B	Wire Harness, RE0F10A (JF011E) (Nissan/Dodge) Internal (22 Pin Case Connector, Green 16 Wire Connector, & Green 5 Wire Connector)(15 3/4" Long) 2007-Up	1	
212452A	Ratio Control Motor, RE0F10A (JF011E) (Stepper Motor) (6 Pin Connector) 2007-Up	1	
212469A	ROM Assembly, RE0F10A (JF011E) (Nissan/Dodge) 5 Pin Connector (1.340"Wide)(Plastic Body) 2007-Up	1	

© Whatever It Takes Transmission Parts. Inc.

PART #	MISCELLANEOUS PARTS	QTY	REFERENCE #
212488A	Plug, RE0F10A(JF011E) Nissan/Dodge Pressure In Rear Cover (10mm Allen Head)(.755"Long) (1.095"/.860"OD) 2007-Up	1	
212492A	Drain Plug, RE0F10A (JF011E) (Nissan/Dodge) In Bottom Pan (19mm Hex x .665"Long) 2007-Up	1	
323492A	Drain Plug, RE0F10A (JF011E) (Nissan/Dodge) Partial (10mm Allen Head)(1.095" / .860" Thick) (.750"Long) In Case Below Filler Tube 2007-Up	1	
212494A	Dipstick Tube, RE0F10A (JF011E) (Nissan) 2 Bolts To Case (22 3/4"Long) 2007-Up	1	
212494D	Dipstick Tube, RE0F10A (JF011E) (Dodge) 2 Bolts To Case (20 1/4"Long) 2007-Up	1	
212495A	Bracket, RE0F10A (JF011E) (Nissan/Dodge) Valve Body To Filter Bolt (One Threaded Nut & 2 Bolt Bracket) 2007-Up	1	
212496A	Cooler Line, RE0F10A (Nissan)(Rear)(5.050"Long) (Banjo Fitting & Barb On Other End) 2007-Up	1	
212496B	Cooler Line, RE0F10A (Nissan) Front (11" Long) (3 Bends)(Banjo Fitting & Barb On Other End)(1 Bolt Bracket) 2007-Up	1	

PART #	PUMP COMPONENTS	QTY	REFERENCE #
323507-1A	Valve, RE0F10A (JF011E) (Nissan/Dodge) Pressure Regulator (In Pump)(1.655" Long) (.670"OD) 2007-Up	1	
323507-3A	Spring, RE0F10A (JF011E) (Nissan/Dodge) Pressure Regulator (In Pump)(1.645" Long) (.495"OD) 2007-Up	1	
212507-6A	Plug, RE0F10A (JF011E) (Nissan/Dodge) Pressure Regulator In Pump (1.080"Thick) (10mm Allen) 2007-Up	1	
212507-6B	Plug, RE0F10A (JF011E) (Nissan/Dodge) Pump Body Pressure (19mm Hex x .550"Thick) (.550"OD Threads) 2007-Up	1	
S212507A-1	Valve, RE0F10A (JF011E) Pump Flow Control Valve 2007-Up	1	
T212507A-1	Valve, RE0F10A (JF011E) Pump Flow Control Valve 2007-Up (Contains Valve & 18 High Strength 6mm Steel Balls) (Use T-JF011E-PTK)	1	
T-JF011E-PTK	Tool Kit, RE0F10A (JF011E) Pulley Tool Kit (Companion Tool KIt For T212507A-1)(Also Includes 18 High Strength 6mm Steel Balls For The Sheave Guide Grooves)	1	
S212507AA-1	Valve, RE0R10A (JF011E) Pump Flow Control (Oversized) 2007-Up (Sonnax) (Must Use T-F-33510N-TL)	1	
T-F-33510N-TL	Reamer For S212507AA-1	1	

PART #	HARDPARTS	QTY	REFERENCE #
212500A	Pump, RE0F10A(JF011E) (Nissan/Dodge) (Cast Number # On Pump Body Is KA6X0623E9) (4 Bolt) 2007-Up	1	
212510A	Pump Body, RE0F10A(JF011E) (Nissan/Dodge)(4 Bolt Aluminum) (4 Bolt Cover)(1.100"ID Filter Neck)(Cast # KA6X0623E9) 2007-Up	1	
212519A	Pump Cover, RE0F10A (JF011E) (NIssan/Dodge)(Cast Iron) (4 Bolt)(1.720"Thick)(One Threaded Boss On Top) 2007-Up	1	
212525A	Chain, RE0F10A(JF011E) (Nissan/Dodge) Pump Drive (38 Links)(.240"Thick)(No Pins Included) 2007-Up	1	
212526A	Sprocket, RE0F10A (JF011E) (Nissan/Dodge) Pump Drive Sprocket (35 Teeth)(4 Slots For Converter)(.440"Thick)(2.690"OD)(.110"Thick At Chain Teeth)(Has A Lip Where #205 Spacers Ride) 2007-Up	1	
212526B	Sprocket, RE0F10A(JF011E) (Nissan/Dodge) Pump Drive Sprocket (35 Teeth)(4 Slots For Converter)(.398"Thick)(2.690"OD)(.110"Thick At Chain Teeth)(Does Not Use Spacers #205) (Has Flat Surface on Both Sides) 2007-Up	1	
212527A	Sprocket, RE0F10A (JF011E) (Nissan/Dodge) Pump Driven (31 Teeth)(.482"Thick) (.110" At Teeth)(2.375"OD)(.468"OD At Shaft) (14 Splines) 2007-Up	1	
323528A	Spacer Plate, RE0F10A (JF011E) (Nissan/Dodge) Pump (Rear) 2.180"OD)(.595"ID)(.363"Thick) (2 Oval Holes, 2 Slots & 2 Guide Pins) 2007-Up	1	
212529-1A	Bracket, RE0F10A (JF011E) (Nissan/Dodge) Conveter Reactor To Pump Assembly (.155"Thick) (2.470"Long)(2 Bolt Holes) 2007-Up	1	
212529A	Converter Reactor, RE0F10A (JF011E) (Nissan/Dodge) (7 Bolt Cast Iron)(32 Splines)(2 Rings One Threaded Hole) 2007-Up	1	
212532A	Rotor, RE0F10A(JF011E) (Nissan/Dodge) Pump (.865"Thick)(12 Slots)(18 Splines)(1.495"OD) 2007-Up	1	
212533A	Vanes, RE0F10A (JF011E) (Nissan/Dodge) Pump (.052"Thick)(.865"Long)(.315"Wide) 2007-Up	12	
212534A	Slide, RE0F10A (JF011E) (Nissan/Dodge) Pump (Outer) (2.120"OD)(.865"Thick) (Has Two Alignment Pin Holes) 2007-Up	1	
212554A	Drum, RE0F10A(JF011E) (Nissan/Dodge) Forward (3 Clutch)(30 Teeth)(24 Splines) (6 Bore Holes)(2.520"ID)(1.960"Thick) 2007-Up	1	
212564A	Piston Kit, RE0F10A(JF011E) (Nissan/Dodge) Foward Drum (Bonded Piston/Retainer) (24 Springs) 2007-Up	1	

© Whatever It Takes Transmission Parts. Inc.

PART #	HARDPARTS (Continued)	QTY	REFERENCE #
212566A	Piston Kit, RE0F10A(JF011E) (Nissan/Dodge) Rev Planet To Case 2007-Up	1	
212587A	Planet, RE0F10A (JF011E) (Nissan/Dodge) Reverse (4 Gear Left Angle)(40 Spline Hub) (2.110" At Edge)(14 Teeth Gears) 2007-Up	1	
212592A	Ring Gear, RE0F10A (JF011E) (Nissan/Dodge) Front Planet (109 Teeth)(Right Angle)(30 Lugs) (.635"Thick)(5.680"OD) 2007-Up	1	
212617A	Sungear, RE0F10A (JF011E) (Nissan/Dodge) Reverse Planet (82 Teeth Right Angle)(3.685"OD) (36 Teeth Clutch Hub) 2007-Up	1	
212670A	Shaft, RE0F10A (JF011E) (Nissan/Dodge) Input (6 3/4"Long)(20 Splines On End) (22 Splines Rear) 2007-Up	1	
212671A	Shaft, RE0F10A (JF011E) (Nissan/Dodge) Pump Drive (3.550"Long)(.392"OD Pilot)(18 Splines & 14 Splines On End)2007-Up	1	
212691A	Ratio Control Motor Follower, RE0F10A (JF011E)(Nissan/Dodge)(Aluminum)(2.745"Long) (.200"/.435"Thick At Forks) 2007-Up	1	
212691-2A	Guide Pin, RE0F10A (JF011E) (Nissan/Dodge) Ratio Control Motor Follower (.390"OD) (6.260"Long) 2007-Up	1	
212691-3A	Return Spring, RE0F10A (JF011E) (Nissan/Dodge) Ratio Control Motor Follower (1.645"Long) (.820"OD & .810"OD Retainers On Each End) 2007-Up	1	
212694A	Retainer, RE0F10A (JF011E) (Nissan/Dodge) Primary Bearing To Rear Cover (3 Bolt Triangle) (2.975"ID Hole) 2007-Up	1	
212696A	Bracket, RE0F10A (JF011E) (Nissan/Dodge) Holds Secondary Pulley Bearing To Rear Cover (3 Bolt)(2.965"ID) 2007-Up	1	
212700D	Belt, RE0F10A (JF011E) (Nissan/Dodge) 2007-Up	1	
212702-1A	Cover, RE0F10A (JF011E) (Nissan/Dodge) Driven Sprocket (Tin) (Held By 2 Nuts To #702) (.725"Thick) 2007-Up	1	
212702A	Shield, RE0F10A (JF011E) (Nissan/Dodge) Over Pump And Under Differential (Tin) (2 Bolts To Case)(2 Studs & Rubber Strip On Edge) 2007-Up	1	
212705A	Primary Pulley Half, RE0F10A (JF011E) (Nissan/Dodge) (7"Long)(6 3/4"OD)(38 Splines) (1.410"OD)(Right Hand Threads)(Front Half) 2007-Up	1	
205705-1A	Steel Ball, RE0F10A (JF011E) (Nissan/Dodge) Secondary Pulley 2007-Up	12	
212706A	Secondary Pulley Half, RE0F10A (JF011E)(Nissan/Dodge) Front Half (2.750"Thick) (6 11/16"OD) 2007-Up	1	
212707-1A	Steel Ball, RE0F10A (JF011E) (Nissan/Dodge) Primary Pulley (.236"OD) 2007-Up	6	
212707A	Primary Pulley Half, RE0F10A (JF011E) (Nissan/Dodge) (Rear) (2.265"Thick)(6 3/4"OD) (1.940"ID)(5.850"Piston Pocket) 2007-Up	1	
212708A	Secondary Pulley Half, RE0F10A (JF011E) (Nissan/Dodge) Rear Half (10" Tall) (6 1/2"OD) (10 Parking Lugs)(30 Splines) 2007-Up	1	
212710A	Gear, RE0F10A (Nissan/Dodge) Driven Transfer On Secondary Pulley (30 Teeth) (One Groove)(Right Angle)(2.885"OD)(1.235"Thick) 2007-Up	1	
212710B	Gear, RE0F10A (Nissan/Dodge) Driven Transfer On Secondary Pulley (29 Teeth)(No Groove) (Right Angle)(2.885"OD)(1.235"Thick) 2007-Up	1	
212712A	Gear, RE0F10A (Nissan) Transfer Driven (49 Teeth)(Left Angle)(1 Center Groove) (4.590"OD)(1.275"Thick) 2007-Up	1	
212712D	Gear, RE0F10A (JF011E)(Dodge) Transfer Driven (50 Teeth)(Left Angle Teeth)(No Groove) (4.695"OD)(1.135"Thick At Edge) 2007-Up	1	
212716A	Differential Housing, RE0F10A (JF011E)(Nissan)(1.575"OD)(8 Bolt)(5.640"Tall) 2007-09	1	
212720A	Ring Gear, RE0F10A (Nissan/Dodge) Differential (71 Teeth)(Right Angle)(8 Bolts) (1.380"Thick)(8.020"OD) 2007-Up	1	
212730A	Pinion, REF010A (Nissan/Dodge) Shaft (20 Teeth) (One Groove In Center) (4.670"Long)(Right Hand Threads)(1.020"OD)(2.495"OD Gear)(Left Angle)(32 Splines) 2007-Up	1	
212740A	Valve Body, RE0F10A/RE0F10B (JF011E)(Nissan/Dodge)(4 Solenoids)(2 Pressure Switches) (W/Stepper Motor)(1XF00 1XF-L 1XF-U) 2007-05/12 (Can Use Later Models If One Sensor Unplugged)	1	
212740AA	Valve Body, RE0F10A (JF011E) (Nissan/Dodge)(4 Solenoids)(1 Pressure Switch) (W/Stepper Motor)(Comes With S203741CK Installed) 05/2012-Up	1	

PART #	VALVE BODY PARTS	QTY	REFERENCE #
212741-1A	Manual Valve, RE0F10A (JF011E) (Nissan/Dodge) Aluminum (4.315"Long)(.470"OD)(3 Lands) 2007-Up	1	
S203741ALK	Valve Kit, RE0F10A (JF011E) Solenoid Valve (Contains; Valve, Sleeve, & Spring) 2007-Up (Sonnax)	1	
S212741CK	Valve Kit, RE0F10A (JF011E) Torque Converter Pressure Regulator (Contains: Valve & End Plug)(Must Use Tools # T-F-113741-TL13 & T-VB-Fix)(Sonnax)	1	
T-F-113741-TL13	Reamer for S212741CK	1	
S212741COSK	Valve Kit, RE0F10A (JF011E) Lock-Up Control (Oversize)(Contains Large Valve, Small Valve & Sleeve)(Sonnax)(Must Use T-F-113741-TL22 and T-VB-Fix)	1	
T-F-113741-TL22	Reamer for S212741COSK	1	

© Whatever It Takes Transmission Parts. Inc.

S203741FOSK.. Valve Kit, RE0F10A (JF011E) TCC Limit & Lube Valve Kit (Oversized) (Contains Valve, Spring & End Plug)(Must Use T-F-113741-TL4) 1
T-F-113741-TLA.. Reamer for S203741FOSK 1
S212741PK .... Valve Kit, RE0F10A (JF011e) Oversized Secondary Pulley Control Valve & End Plug (Contains Valve & End Plug) (Must Use T-F-113741-TL17 & T-VB-Fix)(Sonnax) 1
T-F-113741-TL17 Reamer For S212741PK 1
S212741POSK.. Valve Kit, RE0F10A (JF011E) Oversized Secondary Pulley Control Valve & End Plug (Contains: Valve & End Plug) (Must Use T-F-113741-TL21 & T-VB-Fix)(Sonnax) 1
T-F-113741-TL21.. Reamer for S212741POSK 1
T-VB-FIX..... Valve Body Reaming Fixture (Sonnax) 1

PART #	HARDPARTS (Continued)	QTY	REFERENCE #

212750A ..... Bell Housing, RE0F10A (Nissan) (23 Bolts To Case) (6 1/2" Top Bolts) (2:30 Open Starter)(4.255"Thick) (FOB Cast) 2007-Up 1
212750AA..... Bell Housing, RE0F10A (Nissan)(2.0L)(23 Bolts To Case)(9 3/8" Top Bolts)(2:30 Closed Starter) (3.940"Thick)(Z0A Cast) 2007-Up 1
212750AB..... Bell Housing, RE0F10A (Nissan)(21 Bolts To Case)(8 3/8" Top Bolts)(11:00 Closed Starter) (Cast # 214163 In Converter Area) 1
212750D ..... Bell Housing, RE0F10A (JF011E) (Dodge) (22 Bolts To Case)(6 3/4" Top Bolts) (7:30 Closed Starter)(Cast # G00)(5 Mounting Bosses) 2007-Up 1
212759AK..... Rear Cover W/Pulley Assembly, RE0F10A (19 Bolt Rear Cover) (W/ 2 Threaded Bosses)(Cast # AFB)(W/ 29 Teeth Transfer Gear)(Includes #700, 705, 706, 707, 708, 710, 795) (Will interchange W/ 212759BK If Customer Uses His #710 Gear) 2007-Up 1
212759ABK .... Rear Cover With Pulley Assembly, RE0F10A (19 Bolt Rear Cover)(With 2 Threaded Bosses) (Cast # AFB)(With 28 Teeth Transfer Gear)(Includes #700, 705, 706, 707, 708, 710, 759) (Will Interchange With 212759BK If Customer Uses Their #710 Gear) 2007-Up 1
212759B ..... Rear Cover, RE0F10A (Dodge) 19 Bolts To Case (Cast # AMX Z0A) (2 Mounting Bosses) 2007-Up 1
212759BK..... Rear Cover W/ Pulley Assembly, RE0F10A (19 Bolt Rear Cover) (W/ 2 Threaded Bosses)(Cast # AMX)(W/ 30 Teeth Transfer Gear)(Includes #700, 705, 706, 707, 708, 710, 795) (Will Interchange W/ 212759AK If Customer Uses His #710 Gear) 2007-Up 1
212759BAK .... Rear Cover W/ Pulley Assembly, RE0F10A (19 Bolt Rear Cover)(W/ 4 Threaded Bosses) (Cast # AFA)(W/29 Teeth Transfer Gear)(Includes #700, 705, 706, 707, 708, 710, 795)2007-Up . 1
212759C ..... Rear Cover, RE0F10A (Nissan) 19 Bolts To Case (Cast # FOB)(4 Mounting Bosses) 2007-Up 1
212759CK..... Rear Cover W/ Pulley Assembly, RE0F10A (19 Bolt Rear Cover)(W/4 Threaded Bosses)(Cast #F0B)(With 30 Teeth Transfer Gear)(Includes #700, 705, 706, 707, 708, 710, 795) 2007-Up .....
212759CAK .... Rear Cover W/ Pulley Assembly, RE0F10A (19 Bolt Rear Cover)(W/4 Threaded Bosses)(Cast #CTR)(With 29 Teeth Transfer Gear)(Includes #700, 705, 706, 707, 708, 710, 795) 2007-Up .....
212759CBK .... Rear Cover W/ Pulley Assembly, RE0F10A (19 Bolt Rear Cover)(W/4 Threaded Bosses)(Cast #CTR)(With 30 Teeth Transfer Gear)(Includes #700, 705, 706, 707, 708, 710, 795) 2007-Up 1
212759CCK .... Rear Cover W/ Pulley Assembly, RE0F10A (19 Bolt Rear Cover)(W/6 Threaded Bosses)(Cast #AFO)(With 29 Teeth Transfer Gear)(Includes #700, 705, 706, 707, 708, 710, 795) 2007-Up 1
212759CDK .... Rear Cover W/ Pulley Assembly, RE0F10A (19 Bolt Rear Cover)(W/6 Threaded Bosses)(Cast #Z0B, Z1B)(With 30 Teeth Transfer Gear)(Includes #700, 705, 706, 707, 708, 710, 795) 2007-Up 1
212759CEK .... Rear Cover W/ Pulley Assembly, RE0F10A (19 Bolt Rear Cover) (W/ 6 Threaded Bosses)(Cast # Z0B,Z1B)(W/29 Teeth Transfer Gear)(Includes #700, 705, 706, 707, 708, 710, 759) 2007-Up 1
212759CGK.... Rear Cover W/ Pulley Assembly, RE0F10A (19 Bolt Rear Cover) (W/ 6 Threaded Bosses)(Cast # ZOA)(W/29 Teeth Transfer Gear)(Includes #700, 705, 706, 707, 708, 710, 759) 2007-Up . 1
212759CGBK.. Rear Cover W/ Pulley Assembly, RE0F10A (19 Bolt Rear Cover)(W/ 6 Threaded Bosses)(Cast # ZOA)(W/24 Teeth Transfer Gear)(Includes #700, 705, 706, 707, 708, 710, 759) 2007-Up . 1
212760A ..... Case, RE0F10A (Nissan)(19 Pan Bolts)(AFE Cast)(4 Bolt Cooler)(1 Speed Sensor 2007-Up 1
212760AA..... Case, RE0F10A (Nissan)(2.0L)(Cast # AF0)(19 Pan Bolts)(4 Bolt Cooler)(3.570"OD) 2007-Up.... 1
212760D ..... Case, RE0F10A (JF011E)(Dodge) (18 Pan Bolts)(4 Bolt Cooler)(1 Speed Senor) 2007-Up..... 1
212761A ..... Plug Pressure Tap, RE0F10A (JF011E)(Nissan/Dodge) (14mm Hex x .670"Long) 2007-Up 6
212765A ..... Pan, RE0F10A (JF011E)(Nissan) (19 Bolts)(2 Dowel Pins) 2007-Up 1
212765AA..... Pan, RE0F10A (JF011E)(Nissan) (19 Bolts)(2 Dowel Pins)(No Drain Plug)(One Step)(2 Round Magnet Dimples)(4 Square Dimples) 2007-Up 1
212765D ..... Pan, RE0F10A (JF011E)(Dodge) (18 Bolts)(2 Dowel Pins) 2007-Up 1
212765DB..... Pan, RE0F10A (JF011E)(Dodge) (18 Bolts)(2 Dowel Pins)(Drain Plug)(No Step)(2 Round Magnet Dimples)(4 Squares)(.875" Deep At Round Dimple Closest To The Squares)..... 1

© Whatever It Takes Transmission Parts. Inc.

PART #	HARDPARTS (Continued)	QTY	REFERENCE #
212765DC	Pan, RE0F10A (JF011E)(Dodge) (18 Bolts)(2 Dowel Pins)(No Drain Plug)(No Step)(2 Round Magnet Dimples)(3 Squares)(1 Rectangle)(.875"Deep At Round Dimple Closest To Square)	1	
212765DD	Pan, RE0F10A (JF011E)(Dodge) (18 Bolts)(2 Dowel Pins)(Drain Plug)(w/ Step)(2 Round Magnet Dimples)(4 Squares)(1.288"Deep At Round Dimple Closest To The Squares)	1	
212769A	Housing, RE0F10A (Nissan) Cooler Filter (Aluminum) (4 Bolt)(2.530"Tall) 2007-Up	1	
212776AK	Bolt Set, RE0F10A (JF011E) (Nissan) Bell To Case (14mm Hex x 1.500" Long)(23 Pieces) 2007-Up	1	
212776DK	Bolt Set, RE0F10A (JF011E) (Dodge) Bell To Case (14mm Hex x 1.500" Long)(22 Pieces) 2007-Up	1	
212777AK	Bolt Set, RE0F10A (JF011E) (Nissan/Dodge) Pump To Case (3-6mm Allen x 3.070" Long) (1-12mm Hex x 1.685"Long) (4 Pieces) 2007-Up	1	
323778AK	Bolt Set, RE0F10A (JF011E) (Nissan/Dodge) Pump Cover To Pump (10mm)(4 Pices) 2007-Up	1	
212779AK	Bolt Set, RE0F10A (JF011E) (Nissan/Dodge) Bottom Pan To Case (19 Pcs)(10mm x .810"Long) 2007-Up	1	
212780AK	Bolt Set, RE0F10A (JF011E) (Nissan/Dodge) Coverter Reactor To Case (12mm Hex x 1.405"Long)(7 Pieces) 2007-Up	1	
212781AK	Bolt Set, RE0F10A (JF011E) (Nissan/Dodge) Rear Cover To Case (14mm Hex x 1.500"Long) (19 Pieces) 2007-Up	1	
212783AK	Bolt Set, RE0F10A (JF011E) (Nissan/Dodge) Rear Cover To Bearing Retainers (Both)(3 Pieces Each)(12mm Hex x 1.430" Long) 2007-09 (Also Fits RE0F10A (JF011E) Rear Cover To Bearing Retainer (3 Pieces) 2007-Up)	2	
212786AK	Bolt Set, RE0F10A (JF011E) (Nissan/Dodge) Ring Gear To Differential (17mm x 1.260"Long) (8 Pieces) 2007-Up	1	
212791AK	Bolt Set, RE0F10A (JF011E) (Nissan/Dodge) Valve Body To Case (Eight 10mm x 2.343"Long, Two-10mm x 2.210"Long, Two-10mm x 1.950"Long, Two-10mm x 1.200"Long Bolts) (14 Pieces) 2007-Up	1	
212795A	Nut, RE0F10A (JF011E) (Nissan/Dodge) Primary (.430"Thick) (6 Point Hex)(55mm)(1.380"ID) (Right Hand Threads) 2007-Up	1	
212796A	Nut, REF010A (JF011E) (Nissan/Dodge) Pinion (6pt Hex)(32mm) (Right Hand Threads)(.985"ID) (.485"Thick) 2007-Up	1	
212797A	Nut, RE0F10A (JF011E) (Nissan/Dodge) Secondary Pulley (Front)(43mm)(6 Point)(.985"ID) (Right Hand Threads)(.840"Thick) 2007-Up	1	
212797B	Nut, RE0F10A (JF011E) (Nissan/Dodge) Secondary Pulley (Rear)(55mm)(6 Point)(1.735"ID) (Right Hand Threads)(.323"Thick) 2007-Up	1	
323799-1A	Nut, RE0F10A (JF011E) (Nissan/Dodge) Holds Internal Lever To End Of Shaft (14mm Hex) (Right Hand Threads) 2007-Up	1	
323799A	Nut, RE0F10A (JF011E) (Nissan/Dodge) Holds External Linkage To Shaft (14mm Hex) (Right Hand Threads) 2007-Up	1	
212843A	Clip, RE0F10A (JF011E) (Nissan/Dodge) Case Connector To Case (1.300"Long)(.050"Wire) (1.080"Wide) 2007-Up	1	
212853A	Cushion, RE0F10A (JF011E) (Nissan/Dodge) Forward (Beveled) (5.475"OD)(4.890"ID) (.060"Thick) 2007-Up	1	
212860A	Snap Ring, RE0F10A (JF011E) (Nissan/Dodge) Secondary Pulley Guide Ball Retainer (.099"Thick)(2.250"OD) 2007-Up	1	
212860B	Snap Ring, RE0F10A(JF011E) (Nissan/Dodge) Secondary Pulley Guide Balls (Rear)(1.920"OD) (.093"Thick Wire) 2007-Up	1	
212861A	Snap Ring, RE0F10A (JF011E) (Nissan/Dodge) Primary Pulley (1.925"OD)(.090"Thick) (Wire Type) 2007-Up	1	
212862A	Snap Ring, RE0F10A (JF011E) (Nissan/Dodge) Holds Secondary Retainer (5.625"OD) (.060"Thick)(.160"Wide) 2007-Up	1	
212865A	Snap Ring, RE0F10A (JF011E) (Nissan/Dodge) Primary Rear Half (2.225"OD)(.095"Thick) 2007-Up	1	
212870A	Use 323870A.	1	
323870A	Snap Ring, RE0F10A (JF011E) (Nissan/Dodge) Holds Ball Bearing To Pump Cover (.985"OD) (.022"Thick)(2 Ears) 2007-Up	1	
212876A	Snap Ring, RE0F10A (JF011E) (Nissan/Dodge) (.090"Thick) (5.795"OD)(.195"Wide) 2007-Up	1	
212877A	Snap Ring, RE0F10A (JF011E) (Nissan/Dodge) Holds Forward Piston Kit In Drum (2.745"OD) (.045"Thick)(.115"Wide) 2007-Up	1	
212878A	Snap Ring, RE0F10A (JF011E) (Nissan/Dodge) Foward Drum To Ring Gear (Front)(.072"Thick) (5.930"OD) 2007-Up) (Also Fits RE0F10A (JF011E)(Nissan/Dodge) Rear Drum To Ring Gear 2007-Up)	1-2	
212880A	Snap Ring, RE0F10A (JF011E) (Nissan/Dodge) Input Shaft To Forward Drum (1.060"OD) (.045"Thick)(.075"Wide) 2007-Up	1	
212892A	Snap Ring, RE0F10A (JF011E) (Nissan/Dodge) Reverse Clutch To Case (.115"Thick)(7 3/4"OD) (.155"Wide) 2007-Up	1	
212893A	Snap Ring, RE0F10A (JF011E) (Nissan/Dodge) Reverse Retainer To Case (7 1/2"OD) (.071"Thick)(.160"Wide) 2007-Up	1	

© Whatever It Takes Transmission Parts. Inc.

323897A ..... Snap Ring, RE0F10A (JF011E) (Nissan/Dodge) Driven Sprocket To Bearing (2 Eyelets) (.560”OD)(.037”Thick) 2007-Up 1

212899A ..... Snap Ring, RE0F10A (JF011E) (Nissan/Dodge) Primary Pulley Holds Bearing To Case (4.110”OD)(.040”Thick) 2007-Up 1

212960A ..... Piston, RE0F10A (JF011E) (Nissan/Dodge) Secondary Pulley (3.015”Thick)(5.150”OD) (1.615”ID) 2007-Up 1

212960AK ..... Piston Kit, RE0F10A (JF011E) 2007-Up 1

212964A ..... Piston, RE0F10A (JF011E) (Nissan/Dodge) Forward (Bonded) (5.505”OD)(2.730”ID) (.685”/.475”Thick) 2007-Up 1

212964BHP ..... Piston, RE0F10B (JF011E) Forward (Bonded)(Hi-Performance Blue) 2011-Up 1

212966A ..... Piston, RE0F10A (JF011E) (Nissan/Dodge) (Bonded)(7”OD) (1.765”Tall)(24 Springs) 2007-Up 1

212970A ..... Spring, RE0F10A (JF011E) (Nissan/Dodge) Secondary Pulley Piston Return (3.245”Tall) (3.300”OD) 2007-Up 1

212971A ..... Spring, RE0F10A (JF011E) (Nissan/Dodge) Primary (.240”Thick)(3.200”OD)(3.135”Long) 2007-Up 1

212974A ..... Return Spring, RE0F10A (JF011E) (Nissan/Dodge) Forward (24 Springs)(.860”Thick)(3.865”OD) 2007-Up 1

212976A ..... Retainer, RE0F10A (JF011E) (Nissan/Dodge) Reverse (24 Springs)(1.015”Thick)(7 1/8”OD) 2007-Up 1

212977A ..... Stiffner Plate, RE0F10A (JF011E)(Nissan/Dodge) Reverse Clutch For Retainer (3 Teeth) (.045”Thick)(7 1/8”OD) 2007-Up 1

212980A ..... Retainer, RE0F10A (JF011E) (Nissan/Dodge) Secondary Pulley (1.910”Thick)(5.240”OD) (2.060”ID) 2007-Up 1

212981A ..... Piston, RE0F10A (JF011E) (Nissan/Dodge) Primary Pulley (5.858”OD)(1.620”Tall)(1.575”ID) 2007-Up 1

212984A ..... Retainer, RE0F10A (JF011E) (Nissan/Dodge) Forward (Bonded) (5.060”OD)(2.710”ID) (.790”Thick) 2007-Up 1

212984BHP ..... Retainer, RE0F10B (JF011E) Forward (Bonded)(Balance)(Hi-Performance Blue) 2011-Up 1

323991-1A ..... Lever, RE0F10A (JF011E) (Nissan/Dodge) Internal Linkage (2.240” Long)(.125”Thick) 2007-Up 1

212991-2A ..... Dentent Spring, RE0F10A (JF011E) (Nissan/Dodge) (3.470” Long)(.190”OD)(Roller Flat Body With Bent Leg) 2007-Up 1

212991-3A ..... Rooster Comb, RE0F10A (JF011E) (Nissan/Dodge) (5 Detents) (.475”Hole)(4 Holes)(.760”Thick) 2007-Up 1

212991-4A ..... Shaft, RE0F10A (Nissan) Linkage (16 7/16”Long) (1 Groove)(1 Hole)(.450”/.470”OD) 2007-Up 1

212991-5A ..... Pin, RE0F10A (JF011E) (Nissan/Dodge) Holds Shaft To Case (1.285”Long)(.115”OD) 2007-Up 1

323991-6A ..... Pin, RE0F10A (JF011E) (Nissan/Dodge) Holds Rooster Comb To Shaft (1” Long)(.160”OD) 2007-Up 1

212992A ..... Shift Lever, RE0F10A (JF011E) (Nissan/Dodge) External (.155”Thick)(2 Bends 2 Slots & 1 Hole) (3.095”Tall) 2007-Up 1

212994-1A ..... Actuator, RE0F11A (JF011E) (Nissan) Park Rod (2 Holes) (.395”ID)(2.755”Long)(.355”Thick) 2007-Up 1

212994A ..... Park Rod, RE0F10A (JF011E) (Nissan/Dodge) (6”Long)(.800”OD) (Ball On Bend) (.233”Wire Size) 2007-Up 1

212995AK ..... Park Pawl Assembly, RE0F11A (JF015E) (Nissan/Dodge) (.315”Thick) 2007-09 1

212996A ..... Fitting, RE0F10A (Nissan) Cooler Line (Banjo Type)(19mm Hex x 1.520”Long) 2007-Up 2

212998D ..... Cooler, RE0F10A (JF011E)(Dodge) External (Aluminum)(4 Bolt) (3.775”OD)(2.955”Tall Body) (4 Elbow Lines) 2007-Up 1

212999-1A ..... Oiler Tube, RE0F10A(JF011E) (Nissan/Dodge) In Case For Belt (1 Bolt Two Bends)(2.435”Long) (.470”OD Head) 2007-Up (Also Fits RE0F10D(JF016E) Case For Belt) 1

212999-6A ..... Oil Tube, RE0F10A (JF011E) (Nissan/Dodge) Differential To Bell (.250”OD)(6 Bends) (8 7/16”Long) 2007-Up 1

© Whatever It Takes Transmission Parts. Inc.

RE0F10D (JF016E) 3VX0A / 3VX0C

CVT FWD

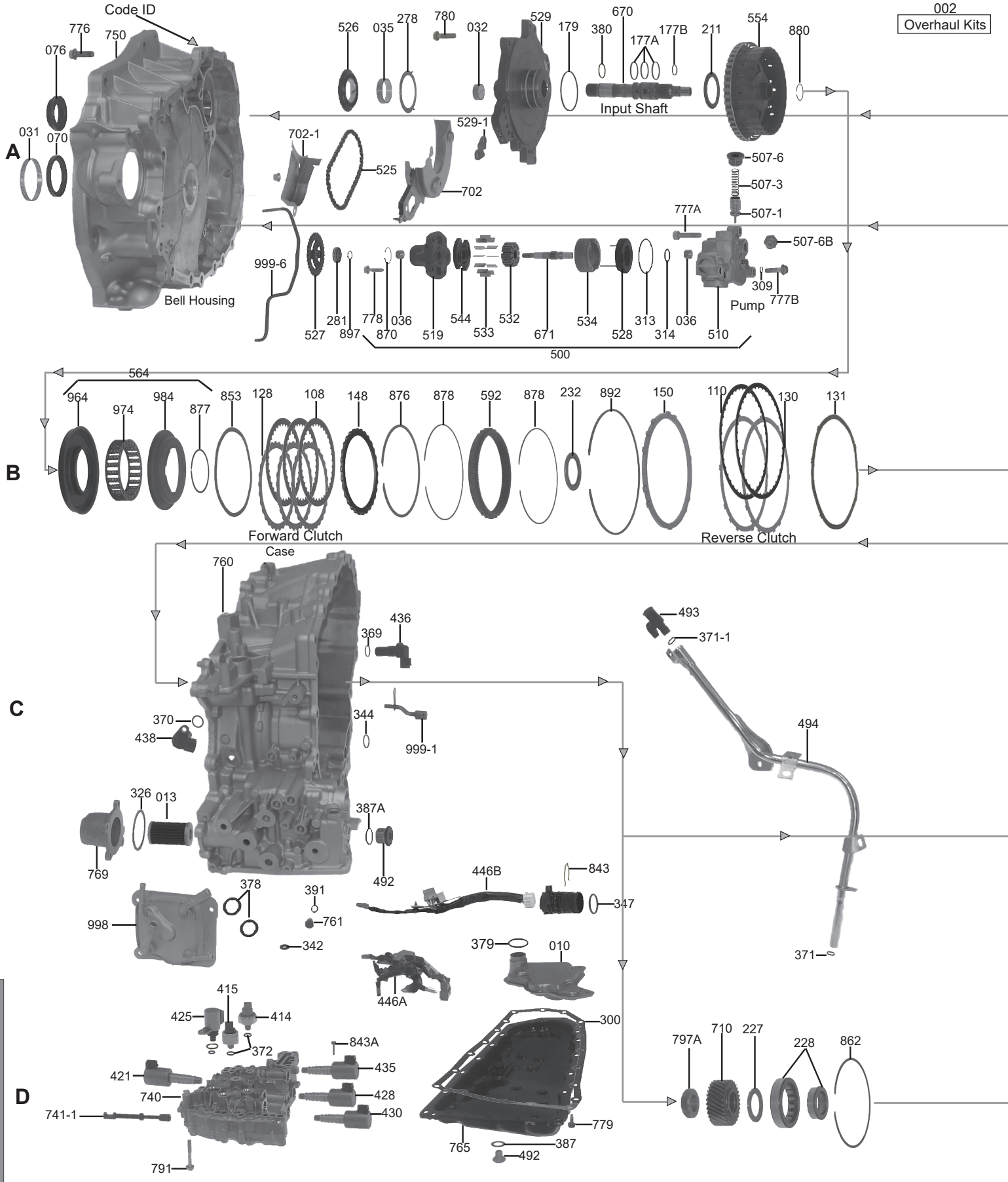

© Whatever It Takes Transmission Parts. Inc.

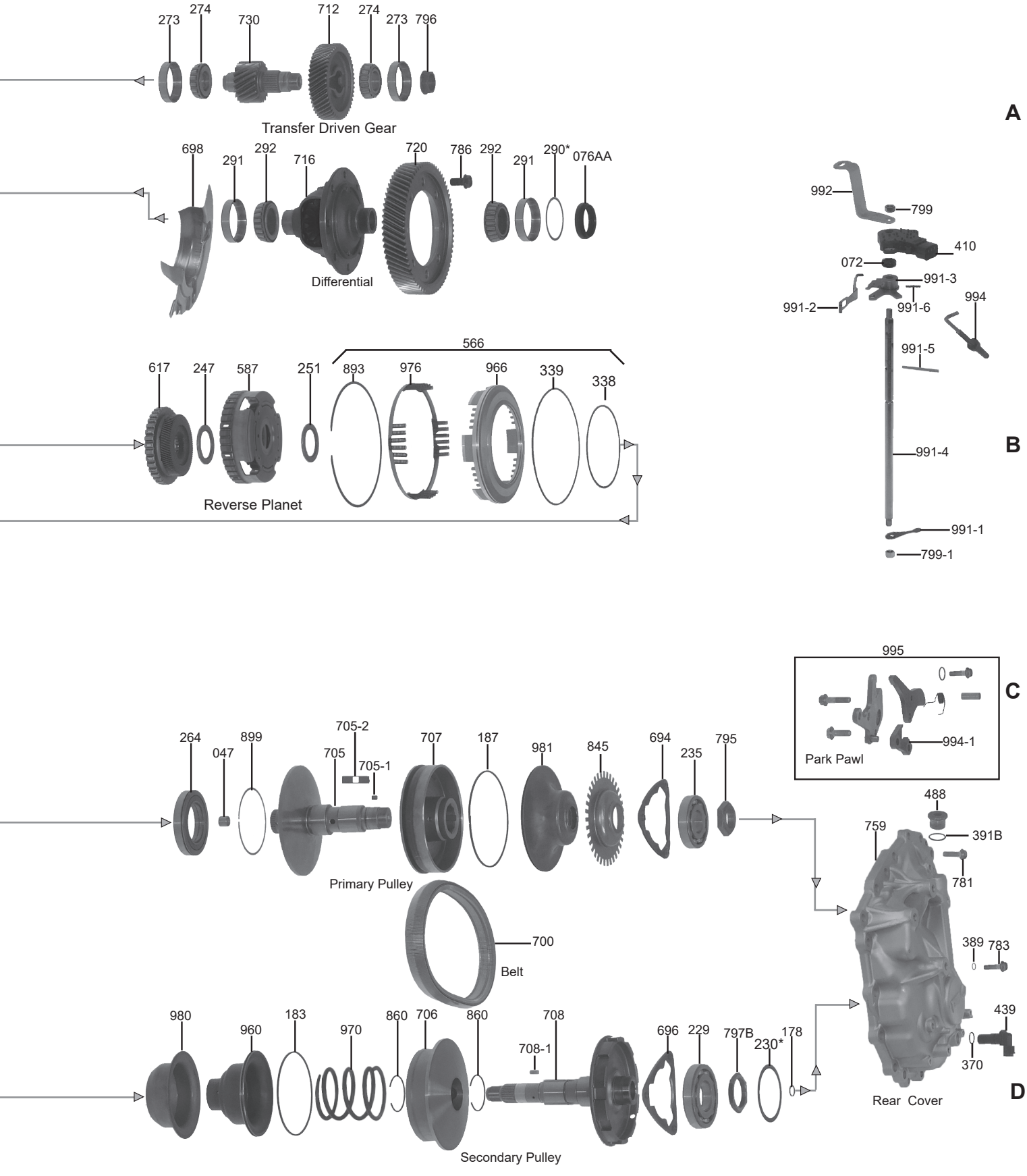

© Whatever It Takes Transmission Parts. Inc.

PART #	OVERHAUL KITS	QTY	REFERENCE #
333002AF	Overhaul Kit, RE0F10D (JF016E) 2012-Up (CVT FWD)	1	

PART #	FILTERS	QTY	REFERENCE #
333010A	Filter, RE0F10D (JF016E) (2 Bolt Metal Round Pick Up) (1.39ID)(.480"Tall Pick Up) 2013-Up	1	
323013A	Filter, RE0F10D (JF016E) Auxillary External Filter (1.435"OD)(2.560"Long)(Cartridge Type With Seal) 2013-Up	1	

PART #	BUSHINGS	QTY	REFERENCE #
212032A	Bushing, RE0F10D (JF016E) Converter Reactor (1.040"OD)(.920"ID)(.400"Wide)(Babbit) (2 Grooves) 2013-Up	1	
212035A	Bushing, RE0F10D (JF016E) Pump Drive Sprocket To Converter Reactor (1.440"ID)(1.623"OD) (Babbit)(2 Grooves) 2013-Up	1	
323036A	Bushing, RE0F10D (JF016E) Pump Cover To Shaft & Pump Body To Shaft (.395"ID)(*.475"OD) (.500" Wide) 2013-Up	2	
333047A	Bushing, RE0F10D (JF016E) Primary Pulley Half (Front) (Bronze)(.550"ID)(.540"Long) 2013-Up	1	

PART #	METAL CLAD SEALS	QTY	REFERENCE #
212070A	Seal, RE0F10D (JF016E) Front Pump (2.605"OD)(1.965"ID)(.280"Thick) 2013-UP	1	
60072	Seal, RE0F10D Manual Shaft (.275"Thick)(.875"OD) Linkage	1	
83076A	Seal, RE0F10D (JF016E) Axle Seal 2013-Up	1	
83076AA	Seal, RE0F10D (JF016E) Axle Seal 2013-Up	1	

PART #	FRICTIONS	QTY	REFERENCE #
203108A	Friction, RE0F10D (JF016E) Forward Clutch (.061")(36 Teeth)(5.430"OD) 2013-Up	3	
203110A	Friction, RE0F10D (JF016E) Reverse Clutch (.062")(40 Teeth)(7 1/16"OD) 2013-Up	2	
212119A	Fri Module, RE0F10D (JF016E) 2007-Up	1	

PART #	STEELS	QTY	REFERENCE #
212128A	Steel, RE0F10D (JF016E) Forward Clutch (.050")(30 Teeth)(4.725"ID)(5.700"OD) 2013-Up	3	
333130A	Steel, RE0F10D (JF016E) Reverse Clutch (.054"Thick)(11 Teeth)(6 7/16"ID) 2013-Up	2	
333131A	Cushion, RE0F10D (JF016E) Reverse Clutch (.060"Thick)(5 Teeth)(6 7/16"ID)(Waved) 2013-Up	1	

PART #	PRESSURE PLATES	QTY	REFERENCE #
333148A	Pressure Plate, RE0F10D (JF016E) Foward Clutch (Top)(30 Teeth)(.162"Thick)(4.720"ID) 2013-Up	1	
333150A	Pressure Plate, RE0F10D (JF016E) Reverse Clutch (Top)(11 Teeth)(.195"Thick)(6.450"ID) 2013-Up	1	

PART #	SEALING RINGS	QTY	REFERENCE #
212177AT	Ring, RE0F10D (JF016E) Input Shaft (Teflon)(Butt Joint)(1.120"OD)(.070"Thick) 2013-Up	3	
212177BT	Ring, RE0F10D (JF016E) Input Shaft (Rear)(Teflon)(.670"OD)(.065"Thick) 2013-Up	1	
323178A	Ring, RE0F10D (JF016E) Pulley TO Rear Cover (Fits Both Primary & Secondary)(.065"Thick) (Double Lap Joint) 2007-Up	1	
212178AT	Ring, RE0F10D (JF016E) Secondary Pulley To Rear Cover (.665"OD)(Teflon)(Solid)(Black) 2013-Up	1	
212179A	Ring, RE0F10D (JF016E) Converter Reactor (2.515"OD)(.085" Wide) 2013-UP	2	
333183AT	Ring, RE0F10D (JF016E) Secondary Piston (.087"Thick)(Teflon) (5.270"OD) 2013-Up	1	
333187AT	Ring, RE0F10D (JF016E) Primary Piston (Outer)(Teflon) (6.240"OD)(.090"Thick) 2013-Up	1	

PART #	WASHERS & BEARINGS	QTY	REFERENCE #
212211A	Bearing W/Races, RE0F10D (JF016E) Converter Reactor To Forward Drum (2.315"OD)(1.640"ID) (.160"Thick) 2013-Up	1	
333227A	Spacer, RE0F10A (JF016E) Driven Transfer Gear To Bearing (2.115"OD)(1.270"ID)(.122"Thick) 2013-Up	1	
333228A	Roller Bearing W/Inner Race, RE0F10D (JF016E) Secondary Pulley To Drive Gear (14 Rollers) (3.145"ID) 2013-Up	1	
333229A	Ball Bearing, RE0F10D (JF016E) Secondary Pulley (Rear) (3.815"OD)(.665"Thick)(10 Balls) (Cast # NSK B45-128) 2013-Up	1	

© Whatever It Takes Transmission Parts. Inc.

333230A .....Shim, RE0F10D (JF016E) Secondary Pulley To Rear Cover (3.815”OD) 2013-Up (Selective) ...1 .....
212232A .....Bearing W/Races, RE0F10D (JF016E) Forward Drum To Sungear Hub (.150”Thick)(2.390”OD)
.....(1.580”ID) 2013-Up (Also Fits Sungear Hub To Reverse Planet & Reverse Planet To Ball
.....Bearing).....3 .....
333235A .....Ball Bearing, RE0F10D (JF016E) Primary Pulley To Rear Cover (3.145”OD)(1.340”ID)(.625”Thick)
.....(9 Balls)(Cast # NSK B34- 18AUR) 2013-Up .....1 .....
333247A .....Use 212232A.....1 .....
333251A .....Use 212232A.....1 .....
333264A .....Ball Brg, RE0F10D (JF016E) Primary Pulley (Front)(Sealed) (3.975”OD)(2.160”ID)(.775”Thick)
.....(Cast # NSK 55TM05) 2013-Up .....1 .....
212273A .....Race, RE0F10D (JF016E) Pinion To Bell & Pinion To Case (Tapered)(2.440”OD)(1.983”ID)
.....(.550”Thick) 2013-Up .....1 .....
212274A .....Bearing, RE0F10D (JF016E) Pinion To Bell & Pinion To Case (Tapered)(1.180”ID)(16 Rollers)
.....2013-Up .....2 .....
212278A .....Washer, RE0F10A(JF011E) (Nissan/Dodge) Drive Sprocket To Converter Reactor (3 Tabs)
.....(2.675”OD)(2.010”ID)(.050”Thick) (4 Grooves)(Babbit) 2007-09 (Also Fits RE0F10D (JF016E)
.....Drive Sprocket To Converter Reactor 2013-Up)
323281A .....Ball Bearing, RE0F10D (JF016E) Driven Sprocket (10 Balls)(.915”OD)(.475”ID)(.235”Thick)
.....2013-Up .....1 .....
212290A .....Shim, RE0F10D (JF016E) Differential To Case (Selective) 2013-Up .....1 .....
212291A .....Race, RE0F10D (JF016E) Differential To Bell & Differential To Case (Tapered)(2.675”OD)
.....(.570”Thick)(2.250”ID) 2013-Up.....2 .....
212292A .....Bearing, RE0F10A (JF016E) Differential To Bell & Differential To Case (Tapered)(1.575”OD)
.....(22 Rollers) 2013-Up.....2 .....

PART #	GASKETS & RUBBER COMPONENTS	QTY	REFERENCE #

212300BW.....Gasket, RE0F10D (JF016E) Pan (19 Bolt Holes)(2 Pin Holes) 2013-Up .....1 .....
212309A .....O-Ring, RE0F10D (JF016E) Pump Bolt To Case (.430”OD)(.070”Thick) 2013-Up .....1 .....
323313A .....O-Ring, RE0F10D (JF016E) Rear Spacer To Pump Body (Outer) (2.050”OD)(.095”Thick) 2
.....013-Up .....1 .....
323314A .....O-Ring, RE0F10D (JF016E) Rear Spacer To Pump Body (Inner) (.790”OD)(.095”Thick)
.....2013-Up .....1 .....
333326A .....O-Ring, RE0F10D (JF016E) Cooler Filter Housing To Case (Rubber)(Bonded Metal)(2.500”OD)
.....(.095”Thick) 2013-Up .....1 .....
333338A .....Lathe Cut Seal, RE0F10D (JF016E) Reverse Piston (Inner) (4.670”ID)(.070”Thick) 2013-Up .....1 .....
333339A .....D-Ring, RE0F10D (JF016E) Reverse Piston (Outer)(7.030”OD) (.075”Thick) 2013-Up .....1 .....
212342A .....Transfer Seal, RE0F10D (JF016E) Valve Body To Case (Rubber)(.125”Thick)(.630”OD)(.330”ID)
.....2009-Up .....1 .....
212344A .....O-Ring, RE0F10D (JF016E) Rear Cover To Case Transfer (.065”Thick)(.860”OD) 2013-Up .....1 .....
212347A .....O-Ring, RE0F10D (JF0016E) Case Connector To Case (1.320”OD)(.140”Thick) 2013-Up.....1 .....
333369A .....O-Ring, RE0F10D (JF016E) Output Sensor To Bell Housing (.710”OD)(.080”Thick) 2013-Up ....1 .....
212370A .....O-Ring, RE0F10D (JF016E) Input Speed Sensor To Case (.695”OD)(.080”Thick) 2013-Up .....1 .....
333370A .....O-Ring, RE0F10D (JF016E) Sensor To Rear Cover (.710”OD) (.080”Thick) 2013-Up .....1 .....
323371-1A.....O-Ring, RE0F10D (JF016E) Dipstick To Tube (.570”OD)(.100”Thick) 2013-Up.....1 .....
323371A .....O-Ring, RE0F10D (JF016E) Filler Tube (.740”OD)(.100”Thick) 2013-Up .....1 .....
323372A .....O-Ring, RE0F10D (JF016E) Primary & Secondary Pressure Sensor (.475”OD)(.080”Thick)
.....2013-Up .....2 .....
323378A .....O-Ring, RE0F10D (JF016E) Cooler To Case (1.0580”OD)(.150”Thick) 2013-Up .....1 .....
323379A .....O-Ring, RE0F10D (JF016E) Filter To Pump (1.125”OD)(.100”Thick) 2013-Up.....1 .....
212380A .....O-Ring, RE0F10D (JF016E) Input Shaft To Converter (.955”OD)(.070”Thick) 2013-Up .....1 .....
212387A .....Gasket, RE0F10D (JF016E) Drain Plug To Pan (Copper)(.695”OD)(.510”ID)(.038”Thick)
.....2013-Up .....1 .....
323387A .....O-Ring, RE0F10D (JF016E) Partial Drain Plug To Case (.100”Thick) 2013-Up.....1 .....
212389A .....O-Ring, RE0F10D (JF016E) Rear Cover To Bearing Retainer (.455”OD) 2013-Up .....1 .....
323389A .....O-Ring, RE0F10D (JF016E) Rear Cover To Primary Bolts (.420”OD)(.065”Thick) 2013-Up.....1 .....
212391A .....O-Ring, RE0F10D (JF016E) Pressure Tap (.465”OD)(.085”Thick) 2013-Up.....5 .....
333391B .....O-Ring, RE0F10D (JF016E) Presure Plug To Rear Cover (.770”OD)(.085”Thick) 2013-Up .....1 .....

PART #	ELECTRICAL COMPONENTS	QTY	REFERENCE #

212410A .....Switch, RE0F10D (JF016E) PRNDL (8 Blade Rectangle Connector)(2 Bolts To Case)(All Plastic)
.....(PA66-CGF-MD 7405) 2013-Up.....1 .....
333414A .....Sensor, RE0F10D (JF016E) Secondary Pressure (1.710”Long) (1.055”At Flats)(6 Points)
.....(3 Blade Rectangle Connector) (PPS-CGF30+GB20) 2013-Up .....1 .....
333415A .....Sensor, RE0F10D (JF016E) Primary Pressure (1.670”Long) (.970”At Flats)(6 Points)
.....(Black Connector) 2013-Up .....1 .....
333421A .....Solenoid, RE0F10D (JF016E) Primary (3.520”Long)(Black) (2 Prong Connector)
.....(15Y24 ASHB5 Cast #) 2013-Up .....1 .....
333425A .....Solenoid, RE0F10D (JF016E) TCC Control (1 Bolt)(Flat Top)(2 O-Rings)(1.945”Long) 2013-Up..1 .....

© Whatever It Takes Transmission Parts. Inc.

PART #	ELECTRICAL COMPONENTS (Continued)	QTY	REFERENCE #
333428A	Solenoid, RE0F10D(JF016E) Line Pressure (3.520"Long)(Black) (2 Prong Connector) (15Y24 ASHB5 Cast #) 2013-Up	1	
333430A	Solenoid, RE0F10D (JF016E) Select (3.520"Long Black)(2 Prong Connector)(15Y25 ASHB5M) 2013-Up	1	
333435A	Solenoid, RE0F10D (JF016E) Secondary (3.520"Long)(Black) (2 Prong Connector) (15Y24 ASHB5 Cast #) 2013-Up	1	
212436A	Sensor, RE0F10D (JF016E) Output In Case (2.215"Long)(3 Pin Oval Connector) 2013-Up (Also Fits RE0F10D Input Speed In Case)(Also Fits RE0F10D Primary Pulley Speed)	1-3	
333436A	(Use 212436A)	1	
203436-1A	Shim, RE0F10A (JF016E) Sensor To Bell Housing (.039"Thick)(.545"OD)(.260"ID) 2013-Up	1	
333438A	(Use 212436A)	1	
333439A	(Use 212436A)	1	
333446A	Wire Harness, RE0F10D (JF016E) Internal (16 Pin Green Connector)(5-2 Prong Connector) (2-3 Wire Connector)(1 Ground)(5 Bolt Plate) 2013-Up	1	
333446B	Wire Harness, RE0F10D (JF016E) Internal (22 Pin Black Case Connector)(Temperature Sensor) (Gray Female 17 Hole Connector) 2013-Up	1	

PART #	MISCELLANEOUS COMPONENTS	QTY	REFERENCE #
333488A	Plug, RE0F10D (JF016E) Pressure On Rear Cover (10mm Allen Head)(.925"OD)(.750"Long) (.700"OD Right Hand Threads) 2013-Up	1	
212492A	Drain Plug, RE0F10D (JF016E) In Bottom Pan (19mm Hex x .665"Long) 2013-Up	1	
323492A	Drain Plug, RE0F10D (JF016E)(10mm Allen Head)(1.095"OD / .860"OD)(.750"Long) 2013-Up	1	
T-9336	Dip Stick, 42RLE/62TE/CVT2 All & (All 722.6 Chrysler/Dodge/Jeep Except Crossfire, Sprinter, & Mercedes)2005-Up (52 1/4" Long, Has A Plastic " T"" Handle) (Also Fits RE0F10D(JF016E) 2013-Up)		
333494A	Dipstick Tube, RE0F10D (JF016E) 2 Bolts To Case (23"Long) (2 Extra Brackets Welded On) 2013-Up	1	

PART #	HARDPARTS	QTY	REFERENCE #
333500A	Pump, RE0F10D (JF019E) (Cast Iron Pump Cover)(4 Bolt) (Cast On Pump Body M15Y30CEV7) 2013-Up	1	
323507-1A	Valve, RE0F10D (JF016E) Pressure Regulator In Pump (1.655"Long)(.670"OD) 2013-Up	1	
323507-3A	Spring, RE0F10D (JF016E) Pressure Regulator In Pump (1.645"Long)(.495"OD) 2013-Up	1	
323507-6A	Plug, RE0F10D (JF016E) Pressure Regulator In Pump (.630"Thick)(1.100"OD)(.860"ID) (Right Hand Threads)(11mm Allen Head) 2013-Up	1	
212507-6B	Plug, RE0F10D (JF016E) Pump Body Pressure (19mm Hex x .550"Thick)(.550"OD Threads) 2013-Up	1	
212507A-1	Valve, RE0F10D (JF016E) Pump Flow Control Valve 2007-Up	1	
212507AA-1	Valve, RE0F10D (JF016E) Pump Flow Control (Oversized) 2007-Up	1	
333510A	Pump Body, RE0F10D (JF016E) (4 Bolt Aluminum)(4 Bolt Cover) (M15Y30CEV7)(1.100"ID Filter Opening)(No Groove For O-Ring On Top)(No Seal On Bottom) 2013-Up	1	
333519A	Pump Cover, RE0F10D (JF016E) (Cast Iron)(4 Bolt)(1 Threaded Boss)(No Gasket) 2013-Up	1	
212525A	Chain, RE0F10D (JF016E) Pump Drive (38 Links)(.240"Thick)(No Pins Included) 2013-Up	1	
333526A	Sprocket, RE0F10D (JF016E) Pump Drive (35 Teeth)(4 Converter Slots)(.395"Thick)(2.690"OD) (.110"Thick At Teeth) 2013-Up	1	
212527A	Sprocket, RE0F10D (JF016E) Pump Driven (31 Teeth)(.482"Thick)(.110" At Teeth)(2.375"OD) (.468"OD At Shaft)(14 Splines) 2013-Up	1	
333528A	Spacer Plate, RE0F10D (JF016E) Pump (Rear)(2.080"OD) (.595"ID)(.363"Thick)(2 Oval Holes, 2 Slots & 2 Guide Pins) 2013-Up	1	
333529A	Converter Reactor, RE0F10D (JF016E)(7 Bolt Cast Iron) (32 Splines)(Cast # KM2 CVT-8 5Z03-1) (3.270"Tall) 2013-Up	1	
212529-1A	Bracket, RE0F10D (JF016E) Converter Reactor To Pump Assembly (.155"Thick)(2.470"Long) (2 Bolt Holes) 2013-Up	1	
333532A	Rotor, RE0F10D (JF016E) Pump (1.495"OD)(.628"Thick)(12 Vane) (18 Splines) 2013-Up	1	
323533A	Vanes, RE0F10D (JF016E) Pump Rotor (.052"Thick)(.630"Long)(.315"Wide) 2013-Up	12	
333534A	Slide, RE0F10D (JF016E) Pump (Outer)(2.120"OD)(.632"Thick) (2 Holes For Pins) 2013-Up	1	
323544A	Plate, RE0F11A (JF015E) Pump (Front)(.235"Thick)(2.120"OD) (.515"ID) 2013-16 (Also Fits RE0F10A (JF011E) (Nissan/Dodge) Pump 2007-09)	1	
333554A	Drum, RE0F10D (JF016E) Forward (3 Clutch)(30 Teeth Steels) (48 Teeth Reluctor)(1.970"Thick) (24 Splines) 2013-Up	1	
333587A	Planet, RE0F10D (JF016E) Reverse (4 Gear)(Left Angle) (1.570" At Edge)(14 Teeth Gears) (40 Spline Hub) 2013-Up	1	
212592A	Ring Gear, RE0F10D (JF016E) Front Planet (109 Teeth)(Right Angle)(30 Lugs)(.635"Thick) (5.680"OD) 2013-Up	1	
212617A	Sungear, RE0F10A (JF016E) Reverse Planet (82 Teeth Right Angle)(3.685"OD)(36 Teeth Clutch Hub) 2013-Up	1	

© Whatever It Takes Transmission Parts. Inc.

333670A ..... Input Shaft, RE0F10D (JF016E) (6 3/4" Long)(20 Splines) (22 Splines On Rear) 2013-Up 1
212671A ..... Shaft, RE0F10D (JF016E) Pump Drive (3.550"Long)(.392"OD Pilot)(18 Splines & 14 Splines
..... On End) 2013-Up 1
333694A ..... Retainer, RE0F10D(JF016E) Primary Pulley To Rear Cover (2.975"ID Hole)(.185"/.290"Thick)
..... 2013-Up 1
212696A ..... Bracket, RE0F10D (JF016E) Holds Secondary Pulley Bearing To Rear Cover (3 Bolt)(2.965"ID)
..... 2013-Up 1
333698A ..... Oil Deflector, RE0F10D (JF016E) Differential To Case (3 Bolt Tin) (1.700"Tal)(9"Long) 2013-Up 1
333700A ..... Belt, JF016E (RE0F10D) (CVT8) 2014-Up 1
333702-1A ..... Cover, RE0F10D (JF016E) Driven Sprocket (Tin)(Held By 2 Nuts To #702)(2 Holes)(5 3/4" Long)
..... 2013-Up 1
333702A ..... Shield, RE0F10D (JF016E) Over Pump And Under Differential (Tin) (3 Bolts To Case)(2 Studs)
..... (2 Rubber Strips)(12 3/8"Long) 2013-Up 1
333705-1A ..... Roller Guide, RE0F10D (JF016E) Primary Pulley (Rear) (2.490"Tall)(6 3/4"OD)(38 Splines)
..... (1.215"OD) 2013-Up 1
333705-2A ..... Plate Guide, RE0F10D(JF016E) Primary Pulley (Rear) (.450"Wide)(2.155"Long) 2013-Up
..... (Also Fits Secondary Pulley (Rear)) 2
333705A ..... Primary Pulley Half, RE0F10D (JF016E) (7 1/2"Tall)(Front) (6 3/4"OD)(38 Splines)(1.215"OD)
..... 2013-Up 1
333706A ..... Secondary Pulley Half, RE0F10D (JF016E) (2.740"Thick) (6 11/16"OD)(5.270"Piston Pocket)
..... (Front) 2013-Up 1
333707A ..... Primary Pulley Half, RE0F10D (JF016E) (Rear)(6 3/4"OD) (2.490"Tall)(1.830"ID)(6.240"Piston
..... Pocket) 2013-Up 1
333708A ..... Secondary Pulley Half, RE0F10D (JF016E) (10"Long)(6 3/4"OD) (Rear Half)(30 Splines)
..... 2013-Up 1
333708-1A ..... Roller Guide, RE0F10D (JF016E) Secondary Pulley (.522"Long)(.232"OD) 2013-Up 3
212710A ..... Gear, RE0F10D (JF016E) Driven Transfer On Secondary Pulley (30 Teeth)(On Groove)
..... (Right Angle)(2.885"OD)(1.235"Thick) 2013-Up 1
333712A ..... Gear, RE0F10D (JF016E) Driven Transfer (49 Teeth)(1.265"Thick) (32 Splines)(Left Angle 1
..... Center Groove) 2013-Up 1
212716A ..... Differential Housing, RE0F10D (JF016E) (1.575"OD Nose)(8 Bolt)(5.640"Tall) 2013-Up 1
333720A ..... Ring Gear, RE0F10D (JF016E) Differential (68 Teeth)(Right Angle) (2 Grooves)(8 Bolts)
..... (4.560"ID)(7.685"OD) 2013-Up 1
333730A ..... Pinion, RE0F10D (JF016E) (23 Teeth)(2 Grooves)(4.430"Long Hollow Shaft)(Right Hand
..... Threads)(2.825"OD Gear)(Left Angle 32 Splines) 2013-Up 1
333740A ..... Valve Body, RE0F10D (JF016E) (5 Solenoids, 2 Pressure Switches)(ARO M2B Cast #)
..... 2013-Up 1
333741-1A ..... Manuel Valve, RE0F10D (JF016E) For Valve Body (Aluminum)(4.315"Long) (.470"OD)
..... (3 Lands)(.235"/.315" Between Lands) 2013-Up 1
333750A ..... Bell Housing, RE0F10D (JF016E) (22 Bolts To Case)(6 3/8" To Bolts)(2:30 Open Starter)
..... (4.100"Thick)(AMX Casting) (No Sensor) 2013-Up 1
333759DAK ..... Rear Cover With Pulley Assembly, RE0F10D (19 Bolt Rear Cover)(With 4 Threaded Bosses)
..... (Cast # AA9OA)(With 26 Teeth Transfer Gear)(Includes #700, 705, 706, 707, 708, 710, 759)
..... (With Speed Sensor Hole)(New Generation With No Stepper Motor) 2007-Up (Will Not Interchange
..... With Other Pulley Assemblies) 1
333759DK ..... Rear Cover With Pulley Assembly, RE0F10D (19 Bolt Rear Cover) (With 4 Threaded Bosses)
..... (Cast # 28XOA)(With 30 Teeth Transfer Gear)(Includes #700, 705, 706, 707, 708, 710, 759)
..... (With Speed Sensor Hole)(New Generation With No Stepper Motor) 2007-Up (Will Not Interchange
..... With Other Pulley Assemblies) 1
333759EK ..... Rear Cover With Pulley Assembly, RE0F10D (19 Bolt Rear Cover) (With 4 Threaded Bosses)
..... (Cast # F2B)(With 30 Teeth Transfer Gear)(Includes #700, 705, 706, 707, 708, 710, 759)
..... 2007-Up 1
333760A ..... Case, RE0F10D (JF016E) (Cast # ARO)(2 Speed Sensors) (No Cooler)(19 Pan Bolts)
..... (22 Bolts To Bell)(2.205"Axle Seal)(6 3/8"Cover To Bell) 2013-Up 1
212761A ..... Plug Pressure Tap, RE0F10D (JF016E)(14mm Hex x .670"Long) 2013-Up 5
333765A ..... Pan, RE0F10D (JF016E) Bottom (19 Bolts)(2 Dowel Pin Holes W/ Drain Plug)(No Step)
..... (6 Round Magnet Dimples)(4 Square Dimples) 2013-Sept.2015 1
333765B ..... Pan, RE0F10D(JF016E) Bottom (19 Bolts)(2 Dowel Pin Holes W/ Drain Plug)(No Step)(6 Round
..... Magnet Dimples)(4 Square Dimples) Oct. 2015-Up 1
333769A ..... Housing, RE0F10D (JF016E) External Cooler To Filter (Aluminum) (4 Bolt)(1.960"Tall) 2013-Up 1
333776AK ..... Bolt Set, RE0F10D (JF016E) Bell To Case (14mm Hex x 1.490"Long)(22 Pieces) 2013-Up 1
212777AK ..... Bolt Set, RE0F10D (JF016E) Pump To Case (3- 6mm Allen Head x .690"Long)
..... (1- 12mm Hex x 1.685"Long)(4 Pieces) 2013-Up 1
323778AK ..... Bolt Set, RE0F10D (JF016E) Pump Cover To Pump (10mm)(4 Pieces) 2013-Up 1
333779AK ..... Bolt Set, RE0F10D (JF016E) Bottom Pan To Case (19 Pieces) (10mm x .945"Long) 2013-Up ... 1
212780AK ..... Bolt Set, RE0F10D (JF016E) Converter Reactor To Case (12mm Hex x 1.405"Long)(7 Pieces)
..... 2013-Up 1

© Whatever It Takes Transmission Parts. Inc.

PART #	HARDPARTS (Continued)	QTY	REFERENCE #
212781AK	Bolt Set, RE0F10D (JF016E) Rear Cover To Case (14mm Hex x 1.500”Long)(19 Pieces) 2013-Up	1	
212783AK	Bolt Set, RE0F10D (JF016E) Rear Cover To Bearing Retainer (12mm Hex x 1.430”Long) (3 Pieces) 2013-Up	1	
333786AK	Bolt Set, RE0F10D (JF016E) Ring Gear To Differential (17mm Hex x 1.275”Long)(8 Pieces) 2013-Up	1	
333791AK	Bolt Set, RE0F10D (JF016E) Valve Body To Case (10-10mm x 2.345”) (2-10mm x 1.950”) (2-10mm x 1.200”)(14 Pieces) 2013-Up	1	
333795A	Nut, RE0F10D (JF016E) Primary Rear (46mm Hex)(1.220”ID) (Right Hand Threads)(.475”Thick) 2013-Up	1	
212796A	Nut, RE0F10D (JF016E) Pinion (6 Point Hex)(32mm)(Right Hand Threads)(.985”ID)(.485”Thick) 2013-Up	1	
333797A	Nut, RE0F10D (JF016E) Secondary Pulley (Front)(40mm Hex) (6 Point)(.985”ID)(Left Hand Threads)(.515”Thick)(1.770”OD) 2013-Up	1	
212797B	Nut, RE0F10D (JF016E) Secondary Pulley (Rear)(55mm)(6 PoinT)(1.735”ID)(Right Hand Threads)(.323”Thick) 2013-Up	1	
323799-1A	Nut, RE0F10D (JF016E) Holds Internal Lever To End Of Shaft (14mm Hex)(Right Hand Threads) 2013-Up	1	
323799A	Nut, RE0F10A (JF016E) Holds External Linkage To Shaft (14mm Hex)(Right Hand Threads) 2013-Up	1	
333843A	Pin, RE0F10D (JF016E) Solenoid Retainer (.770”Long) (.310”OD Head)(.115”OD Stem) 2013-Up	4	
333843B	Clip, RE0F10D (JF016E) Case Connector To Case (1.300”Long) (.050”Wire)(1.080”Wide) 2013-Up	1	
333845A	Reluctor, RE0F10D (JF016E) Primary Pulley (36 Teeth)(.803”Tall) (1.380”ID)(5.625”OD) (Output/VSS) 2013-Up	1	
333853A	Cushion, RE0F10D (JF016E) Forward (Waved)(5.480”OD)(4.960”ID)(.060”Thick) 2013-Up	1	
333860A	Snap Ring, RE0F10D (JF016E) Secondary Pulley Half (Wire) (1.870”OD)(.095”Thick) (Front & Rear) 2013-Up	1	
333862A	Snap Ring, RE0F10D (JF016E) Holds Reatainer To Secondary Pulley (5.650”OD)(.070”Thick) (.155”Wide) 2013-Up	1	
323870A	Snap Ring, RE0F10A (JF016E) Holds Ball Bearing To Pump Cover (.985”OD)(.022”Thick) (2 Ears) 2013-Up	1	
333876A	Snap Ring, RE0F10D (JF016E) Holds Low Clutch Pressure Plate (Top) In Case (.090”Thick) (5.770”OD) 2013-Up	1	
333877A	Snap Ring, RE0F10D (JF016E) Holds Foward Piston Kit In Drum (2.765”OD)(.045”Thick) (.115”Wide) 2013-Up	1	
333878A	Snap Ring, RE0F10D (JF016E) Holds Foward Drum To Ring Gear (5.870”OD)(.070”Thick) (Front) 2013-Up	1	
212880A	Snap Ring, RE0F10D (JFD016E) Input Shaft To Forward Drum (1.060”OD)(.0458”Thick) (.075”Wide) 2013-Up	1	
333892A	Snap Ring, RE0F10D (JF016E) Reverse Clutch To Case (.069”Thick)(.155”Wide) 2013-Up	1	
333893A	Snap Ring, RE0F10D (JF016E) Reverse Retainer To Case (7 3/4”OD)(.100”Thick)(.155”Wide) 2013-Up	1	
323897A	Snap Ring, RE0F10D (JF016E) Holds Bearing To Driven Sprocket (2 Eyelets)(.560”OD) (.037”Thick) 2013-Up	1	
212899A	Snap Ring, RE0F10D (JF016E) Holds Primary Pulley Bearing In Case (4.110”OD)(.040”Thick) 2013-Up	1	
333960A	Piston, RE0F10D (JF016E) Secondary (3.080”Thick)(5.265”OD) (1.340”ID) 2013-Up	1	
333960AK	Piston Kit, RE0F10D(JF016E) 2011-Up	1	
333964A	Piston, RE0F10D (JF016E) Forward Clutch (Bonded)(5.435”OD)(2.730”ID)(SKF 11613-55001) 2013-Up	1	
333966A	Piston, RE0F10D (JF016E) Reverse (Aluminum)(1.410”Thick)(7”OD)(4.780”ID)(6 Sets Of 4 Spring Studs) 2013-Up	1	
333970A	Spring, RE0F10D (JF016E) Secondary Piston Return (3.450”Tall)(3.300”OD)(.295”Coil) 2013-Up	1	
333974A	Return Spring, RE0F10D (JF016E) Forward Clutch (24 Springs)(.970”Thick)(3.918”OD) (3.255”ID) 2013-Up	1	
333976A	Retainer, RE0F10D (JF016E) Reverse (24 Springs)(.775”Thick)(6 Sets Of 4)(7 Outer Teeth) 2013-Up	1	
333980A	Retainer, RE0F10D (JF016E) Secondary (1.935”Thick)(5.340”OD)(1.885”ID) 2013-Up	1	
333981A	Piston, RE0F10D (JF016E) Primary (6.290”OD)(.910”Tall)(Steel)(1.350”ID) 2013-Up	1	
333984A	Retainer, RE0F10D (JF016E) Forward Clutch (Bonded)(5.040”OD)(2.735”ID)(.800”Tall) 2013-Up	1	
323991-1A	Lever, RE0F10D (JF016E) (Internal)(2.240” Long)(.125”Thick) 2013-Up	1	
333991-2A	Detent Spring, RE0F10D (JF016E)(3.290”Long)(.190”OD) (Roller Flat Body With Bent Leg) 2013-Up	1	

© Whatever It Takes Transmission Parts. Inc.

333991-3A.....Rooster Comb, RE0F10D (JF016E) (5 Detents)(.475”Hole) (.680”Thick)(3 Holes)(2.868”Long) .....2013-Up .....1 .....
333991-4A.....Shaft, RE0F10D (JF016E) Linkage (15”Long)(1 Groove)(1 Hole) (.450”/.470”OD) 2013-Up .....1 .....
333991-5A.....Pin, RE0F10D (JF016E) Holds Shaft To Case (Solid)(.155”OD)(2.280”Long) 2013-Up .....1 .....
323991-6A.....Pin, RE0F10D (JF016E) Holds Rooster Comb To Shaft (1” Long)(.160”OD) 2013-Up .....1 .....
212992A.....Shift Lever, RE0F10D (JF016E) External (.155”Thick)(2 Bends, 2 Slots & 1 Hole)(3.095”Tall) .....2013-Up .....1 .....
212994-1A.....Actuator, RE0F10D (JF016E) Park Rod (2 Holes)(.395”ID)(2.755”Long)(.355”Thick) 2013-Up.....1 .....
333994A.....Park Rod, RE0F10D (JF016E) (6 1/8”Long)(.800” Ball One Bend) 2013-Up .....1 .....
333995AK.....Park Pawl Assembly, RE0F10D (JF016E) 2013-Up (4 Pieces) (Pawl Is .315”Thick)((Bracket .....Has 1 Dial Pin, 3 Holes & is .300”ThIck).....1 .....
333998A.....Cooler, RE0F10D (JF016E) External (4 Bolt Square)(4 Elbow Lines)(1.405”Thick) 2013-Up .....1 .....
333999-1 .....Oiler Tube, RE0F10D(JF016E) In Case For Belt (2.435”long) (.470”OD Head)(2 Bends) .....2013-Up .....1 .....
212999-6A.....Oil Tube, RE0F10D (JF016E) Differential To Bell (.250”OD)(6 Bends)(8 7/16”Long) 2013-Up .....1 .....

© Whatever It Takes Transmission Parts. Inc.

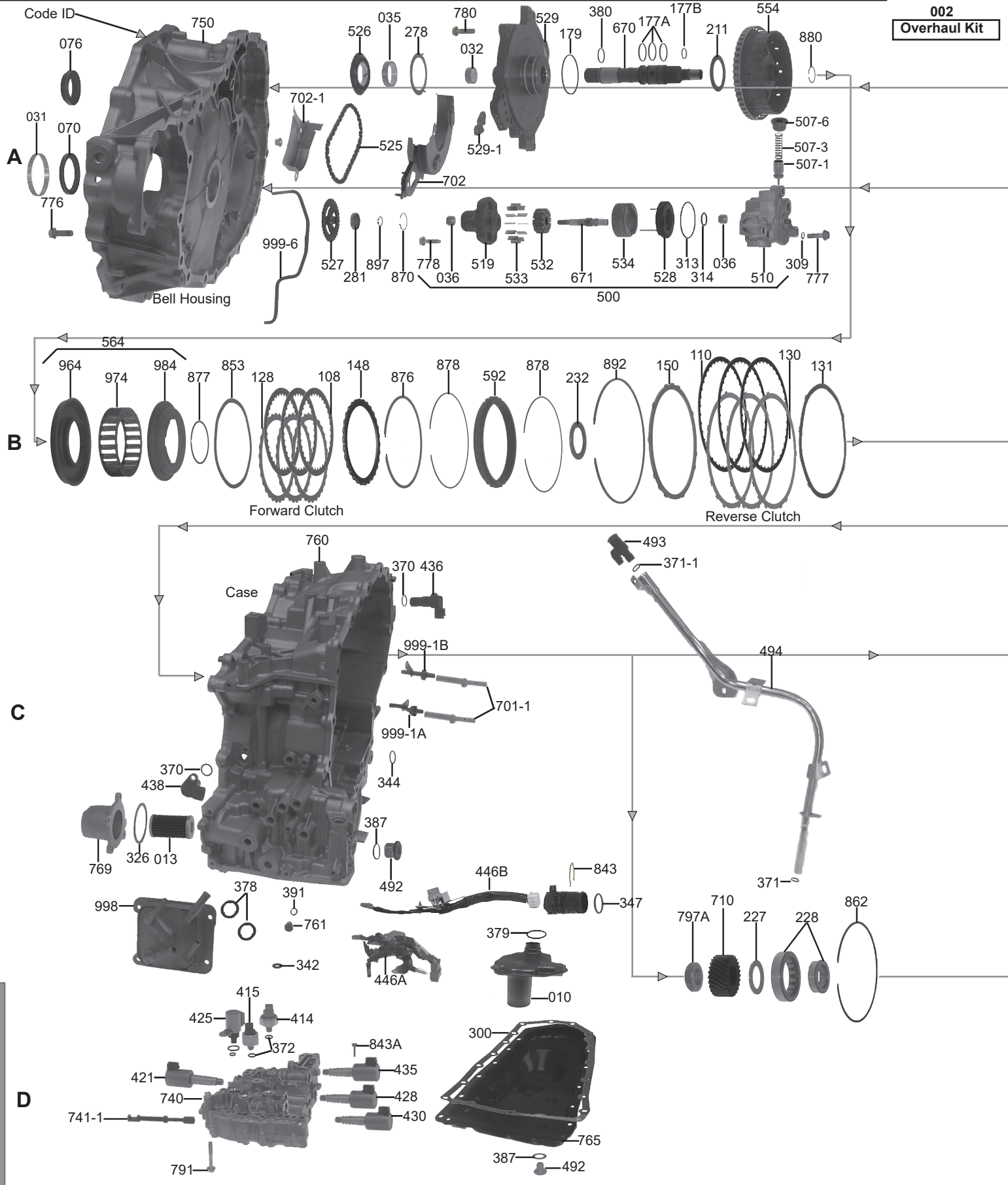

© Whatever It Takes Transmission Parts. Inc.

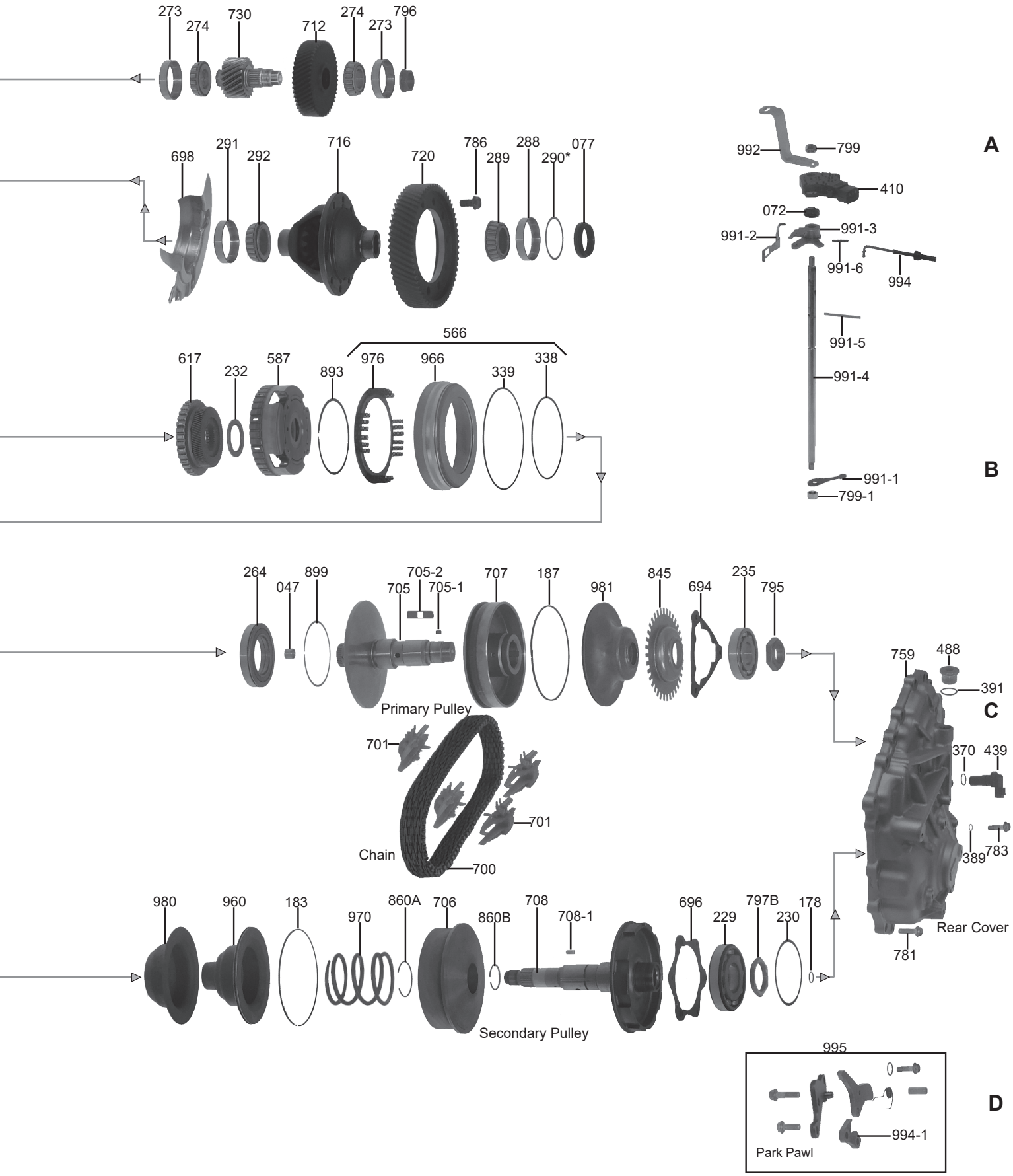

1-800-940-0197

© Whatever It Takes Transmission Parts. Inc.

002
Overhaul Kit

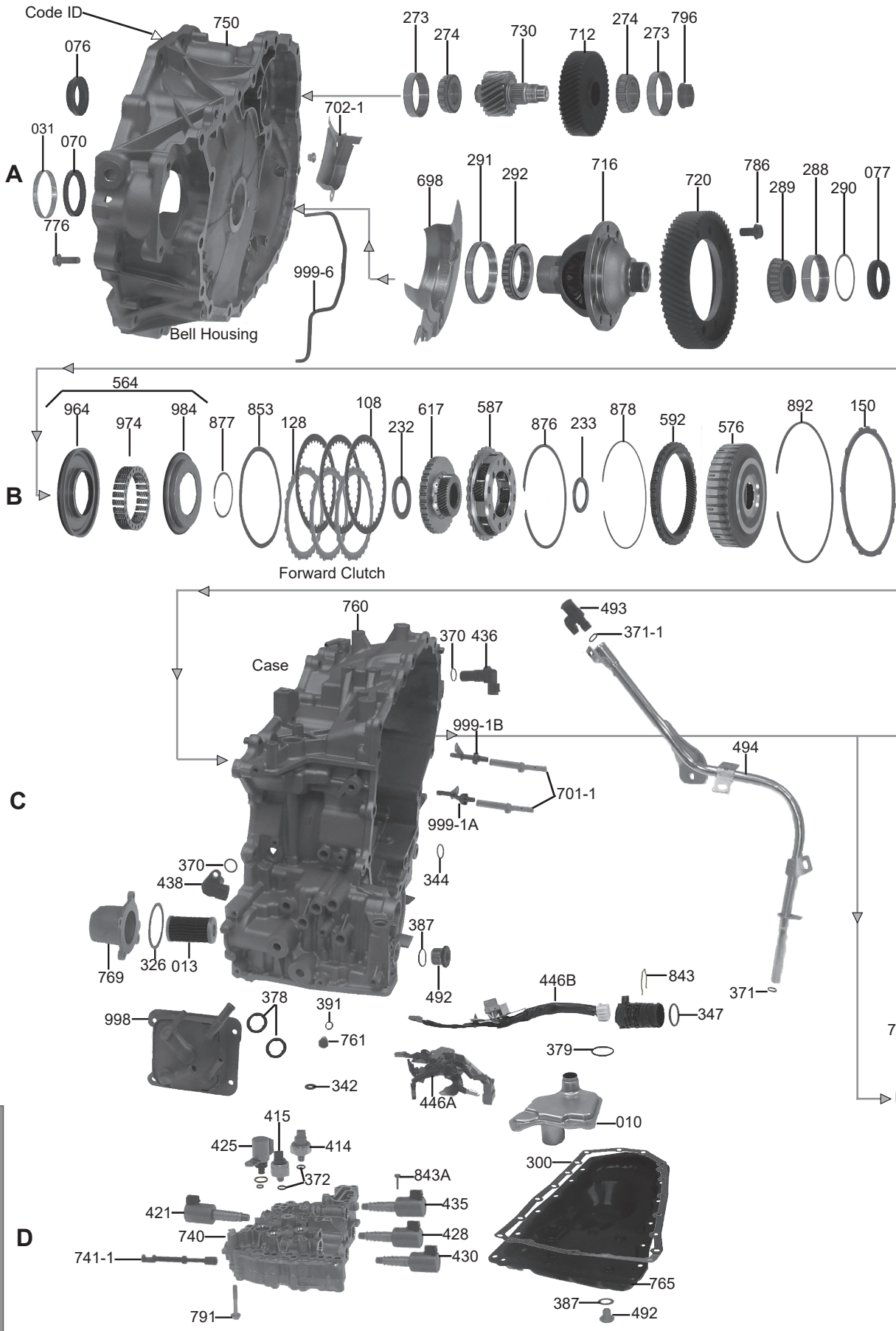

© Whatever It Takes Transmission Parts. Inc.

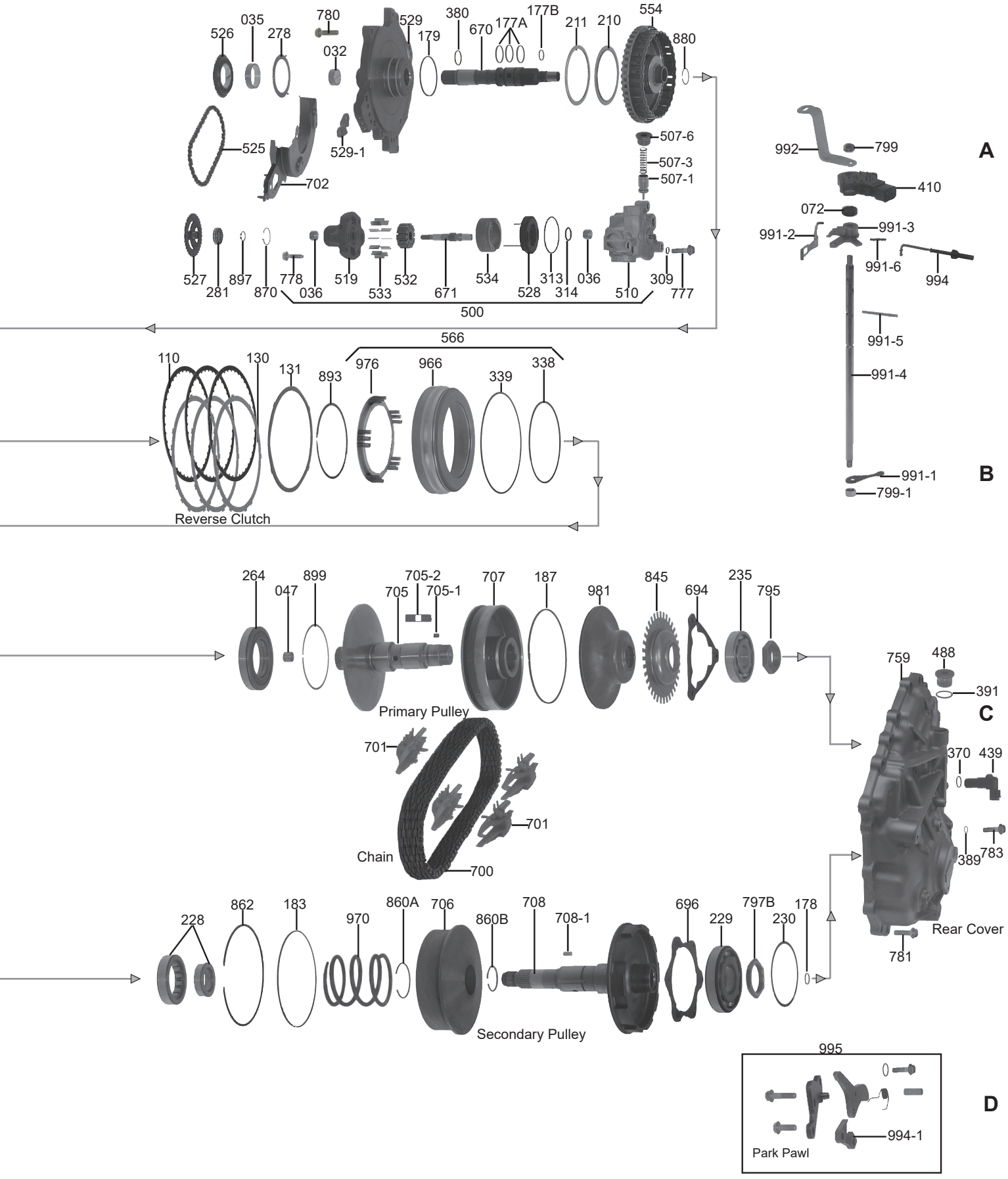

1-800-940-0197

© Whatever It Takes Transmission Parts. Inc.

PART #	OVERHAUL KIT	QTY	REFERENCE #
343002AF	Overhaul Kit, RE0F10E (JF017E) 2012-Up (CVT FWD)	1	
343002A	Overhaul Kit, JF017E 2012-Up	1	

PART #	MASTER L/STEELS KIT	QTY	REFERENCE #
343004AF	Master L/Steels, RE0F10E (JF017E) (CVT FWD) 2012-Up	1	

PART #	FILTERS	QTY	REFERENCE #
343010A	Filter, RE0F10E (3 Bolt Metal) (1 3/8"OD Pick-Up) (1 7/8"Tall) 2013-Up	1	
343010D	Filter, RE0F10J (JF019E) (4x4)(2 Bolt Metal)(1 7/8"Tall)(1 3/8"OD Pick-Up) 2014-Up	1	
323013A	Filter, RE0F10E/F10J Auxiliary External (1.435"OD)(2.560"Long)(Cartridge Type W/ Seal) 2013-Up	1	

PART #	BUSHINGS	QTY	REFERENCE #
212032A	Bushing, RE0F10E/F10J Converter Reactor (1.040"OD)(.920"ID)(.400"Wide)(Babbitt)(2 Grooves) 2013-Up	1	
212035A	Bushing, RE0F10E/F10J Pump Drive Sprocket To Converter Reactor (1.440"ID)(1.623"OD) (Babbitt)(2 Grooves) 2013-Up	1	
323036A	Bushing, RE0F10E/F10J Pump Cover To Shaft (.395"ID)(.475"OD)(.500" Wide) 2013	2	
333047A	Bushing, RE0F10E/F10J Primary Pulley Half (Front)(Bronze)(.550"ID)(.540"Long) 2013-Up	1	

PART #	METAL CLAD SEALS	QTY	REFERENCE #
212070A	Seal, RE0F10E/F10J Front (Pump) (2.605"OD)(1.965"ID)(.280"Thick) 2013-Up	1	
60072	Seal, RE0F10E/F10J Manual Shaft (.275"Thick)(.875"OD)(In Bell Housing)	1	
83076A	Seal, RE0F10E Axle (Both Sides) 2013-Up	1	
83076AA	Seal, RE0F10E Axle(Case Side)(1.6L) 2013-Up	1	
343077A	Seal, RE0F10E/F10J Case To Differential (2.330"OD)(1.515"ID) 2013-Up	1	

PART #	FRICTIONS	QTY	REFERENCE #
203108A	Friction, RE0F10E/F10J Forward Clutch (.061"Thick)(36 Teeth)(5.430"OD) 2013-Up	3	
203110A	Friction, RE0F10E/F10J Reverse Clutch (.062"Thick)(40 Teeth)(7 1/16"OD) 2013-Up	2	
212119A	Friction Module. RE0F10E 2013-Up	1	

PART #	STEELS	QTY	REFERENCE #
212128A	Steel, RE0F10E Forward Clutch (30 Teeth)(.050"Thick)(4.725"ID)(5.700"OD) 2013-Up	3	
343128D	Steel, RE0F10J Forward Clutch (28 Teeth)(4.725"ID)(.055"Thk) 2014-Up	3	
333130A	Steel, RE0F10E/F10J Reverse Clutch (.054"Thick)(11 Teeth)(6 7/16"ID) 2013-Up	2	
333131A	Cushion, RE0F10E Reverse Clutch (.060"Thick)(5 Teeth)(6 7/16"ID)(Waved) 2013-Up	1	
343131D	Cushion, RE0F10J Reverse Clutch (.060"Thk)(4 Teeth)(6 7/16"ID)(Waved) 2014-Up	1	

PART #	PRESSURE PLATES	QTY	REFERENCE #
333148A	Pressure Plate, RE0F10E Forward Clutch (Top)(30 Teeth)(.162"Thick)(4.720"ID) 2013-Up	1	
343150A	Pressure Plate, RE0F10E/F10J Reverse Clutch (Top)(.160"Thick)(6.450"ID) (11 Teeth) 2013-Up	1	

PART #	SEALING RINGS	QTY	REFERENCE #
212177AT	Ring, RE0F10E/F10J Input Shaft (Teflon)(Butt Joint)(1.120"OD)(.070"Thick) 2013-Up	3	
212177BT	Ring, RE0F10E/F10J Input Shaft (Rear)(Teflon)(.670"OD)(.065"Thick) 2013-Up	1	
212178AT	Ring, RE0F10E/F10J Secondary Pulley To Rear Cover (.665"OD)(Teflon)(Solid)(Black) 2013-Up	1	
212179A	Ring, RE0F10E/F10J Converter Reactor (2.515"OD)(.085"Wide) 2013-Up	1	
343183AT	Ring, RE0F10E Secondary Piston (5.900"OD)(.087"Thick) (Teflon) 2013-Up	1	
343187AT	Ring, RE0F10E/F10J Primary Piston (6.300"OD)(.085"Thick)(Teflon) 2013-Up	1	

PART #	WASHERS & BEARINGS	QTY	REFERENCE #
343210D	Bearing W/Races, RE0F10J Converter Reactor To Drum (Rear)(.102"Thick)(4.125"OD) (34 Needles) 2014-Up	1	
343211A	Bearing W/Races, RE0F10E Converter Reactor To Drum (2.315"OD) (1.640"ID) 2013-Up	1	
343211D	Race, RE0F11E Conventer Reactor To Drum (Front)(4.045"OD)(.055"/.127"Thick) 2014-Up	1	
343227A	Spacer, RE0F10E/F10J Driven Transfer Gear To Bearing (2.110"OD)(1.270"ID)(Cast # NSK 032Z-4) 2013-Up	1	

© Whatever It Takes Transmission Parts. Inc.

343228A ..... Bearing W/ Races, RE0F10E/F10J Secondary Pulley To Drive Gear (15 Rollers)(3.150"OD)(.820"Thick)
..... Race-(1.265"ID)(.685"Thick) (2.105"/1.945"OD) 2013-Up ..... 1 .....
343229A ..... Ball Bearing, RE0F10E/F10J Secondary Pulley (Rear)(4.135"OD) (1.765"ID)(9 Balls)(Stepped OD)
..... 2013-Up ..... 1 .....
343230A ..... Shim, RE0F10E/F10J Secondary Pulley (Rear)(4.110"OD)(.020"Thk) 2013-Up (Selective) ..... 1 .....

212232A ..... Bearing, W/Races, RE0F10E/F10J Drum To Sun Gear (.150"Thick)(2.390"OD)(1.580"ID)
..... 2013-Up ..... 1 .....
343233D ..... Bearing, W/Races, RE0F10J Reverse Sun Gear To Reverse Clutch Hub (2.155"OD)(.150"Thick)
..... 2014-Up ..... 1 .....
333235A ..... Ball Bearing, RE0F10E/F10J Primary Pulley To Rear Cover (3.145"OD)(1.340"ID)(.625"Thk)(9 Balls)
..... (Cast # NSK B34-18AUR) 2013-Up ..... 1 .....
343264A ..... Ball Bearing, RE0F10E/F10J Primary Pulley (Front)(4.130"OD) (2.160"ID)(Cast # NSK 5STM06)
..... 2013-Up ..... 1 .....
212273A ..... Race, RE0F10E/F10J Pinion To Bell Housing & Pinion To Case (Tapered)(2.440"OD)(1.983"ID)
..... (.550"Thk)(KOYO 30206J) 2013-Up ..... 1 .....
212274A ..... Bearing, RE0F10E/F10J Pinion To Bell Housing & Pinion To Case (Tapered)(1.180"ID)(16 Rollers)
..... (KOYO 30206JR) 2013-Up ..... 1 .....
212278A ..... Washer, RE0F10E/F10J Drive Sprocket To Bell Housing (3 Tabs)(2.675"OD)(2.010"ID)(.050"Thick)
..... (4 Grooves)(Babbitt) 2013-Up ..... 1 .....
323281A ..... Ball Bearing, RE0F10E/F10J Driven Sprocket (10 Balls)(NTN China 6901NC3V26)(.915"OD)(.475"ID)
..... (.235"Thick) 2013-Up ..... 1 .....
343290A ..... Shim, RE0F10E/F10J Differential To Case (2.930"OD) (Selective) 2013-Up ..... 1 .....
343291A ..... Race, RE0F10E/F10J Differential To Bell Housing / Differential To Case (Tapered) (2.950"OD)
..... (.630"Thick)(2.500"ID)(Cast # STA4575) 2013-Up ..... 1 .....
343291D ..... Race, RE0F10D AWD Differential (Tapered)(3.780"OD)(.510"Thick)(Cast # KOYO St 6096)
..... 2014-Up ..... 1 .....
343292A ..... Bearing, RE0F10E/F10J Differential To Bell Housing / Differential To Case (Tapered) (23 Rollers)
..... (1.770"ID)(Cast # KOYO STA4575) 2013-Up ..... 1 .....
343292D ..... Bearing, RE0F10J AWD Differential Race (27 Rollers)(Tapered)(2.360"ID)(Cast # KOYO ST6096)
..... 2014-Up ..... 1 .....

PART #	GASKETS & RUBBER COMPONENTS	QTY	REFERENCE #

212300BW ..... Gasket, RE0F10E/F10J Nissan Pan (19 Bolt Holes)(2 Pin Holes) 2013-Up ..... 1 .....
212309A ..... O-Ring, RE0F10E Pump Bolt To Case(.430"OD)(.070"Thick) 2013-Up ..... 1 .....
323313A ..... O-Ring, RE0F10E/F10J Rear Pump Spacer To Body (2.050"OD)(.095"Thick) 2013-Up ..... 1 .....
323314A ..... O-Ring, RE0F10E/F10J Rear Pump Spacer To Body (.790"OD)(.095"Thick) 2013-Up ..... 1 .....
333326A ..... O-Ring, RE0F10E/F10J Cooler Filter Housing To Case (Rubber)(Bonded Metal)(2.500"OD)
..... (.095"Thick) 2013-Up ..... 1 .....
333338A ..... Lathe Cut Seal, RE0F10E/F10J Reverse Piston (Inner)(4.670"ID)(.070"Thick) 2013-Up ..... 1 .....
343339A ..... D-Ring, RE0F10E/F10J Reverse Piston (Outer)(6.460"OD) 2013-Up ..... 1 .....
212342A ..... Transfer Seal, RE0F10E/F10J Valve Body To Case (Rubber)(.125"Thick)(.630"OD)(.330"ID)
..... 2013-Up ..... 1 .....
212344A ..... O-Ring, RE0F10E/F10J Rear Cover To Case Transfer (.065"Thick)(.860"OD) 2013-Up ..... 1 .....
212347A ..... O-Ring, RE0F10E/F10J Case Connector To Case (1.320"OD)(.140"Thick) 2013-Up ..... 1 .....
212370A ..... O-Ring, RE0F10E Input Speed Sensor To Case (.695"OD)(.080"Thick) 2013-Up ..... 1 .....
333370A ..... O-Ring, RE0F10E/F10J Sensor To Rear Cover (.710"OD)(.080"Thick) 2013-Up ..... 1 .....
323372A ..... O-Ring, RE0F10E/F10J Secondary Pressure Switch (.475"OD)(.080"Thick) 2013-Up ..... 1 .....
323378A ..... O-Ring, RE0F10E/F10J Cooler To Case (1.050"OD)(.150"Thick) 2013-Up ..... 1 .....
323379A ..... O-Ring, RE0F10E/F10J Filter To Pump (1.125"OD)(.100"Thick)(Black) 2013-Up ..... 1 .....
212380A ..... O-Ring, RE0F10E/F10J Input Shaft To Converter Reactor (.955"OD)(.070"Thick) 2013-Up ..... 1 .....
212387A ..... Gasket, RE0F10E/F10J Drain Plug To Pan (Copper)(.695"OD)(.510"ID)(.038"Thk) 2013-Up ..... 1 .....
323387A ..... O-Ring, RE0F10E Partial Drain Plug To Case (.100"Thick) 2013-Up ..... 1 .....
212389A ..... O-Ring, RE0F10E/F10J Rear Cover To Bearing Retainer (.455"OD) 2013-Up ..... 1 .....
212391A ..... O-Ring, RE0F10E/F10J Pressure Tap (.465"OD)(.085"Thick) 2013-Up ..... 6 .....
333391B ..... O-Ring, RE0F10E/F10J Pressure Tap To Rear Cover (.770"OD)(.085"Thick) 2013-Up ..... 1 .....

PART #	ELECTRICAL COMPONENTS	QTY	REFERENCE #

212410A ..... Switch, RE0F10E/F10J PRNDL (8 Blade Rectangle Connector)(2 Bolts To Case)(All Plastic)
..... (PA66-CGF-MD 7405) 2013-Up ..... 1 .....
333414A ..... Sensor, RE0F10E/F10J Secondary Pressure (1.710"Long)(1.055"At Flats)(6 Points)(3 Blade
..... Rectangle Connector)(PPS-CGF30+GB20) 2013-Up ..... 1 .....
333415A ..... Sensor, RE0F10E Primary Pressure (1.670"Long)(.970"At Flats)(6 Points)(Black Conn.)
..... 2013-Up ..... 1 .....
333421A ..... Solenoid, RE0F10E/F10J Primary (3.520"Long)(Black)(2 Prong Connector)(15Y24 ASHB5 Cast #)
..... 2013-Up ..... 1 .....
333425A ..... Solenoid, RE0F10E/F10J TCC Control (1 Bolt)(Flat Top)(2 O-Rings)(1.945"Long) 2013-Up ..... 1 .....

© Whatever It Takes Transmission Parts. Inc.

PART #	ELECTRICAL COMPONENTS (Continued)	QTY	REFERENCE #
333428A	Solenoid, RE0F10E/F10J Line Pressure (3.520”Long)(Black)(2 Prong Connector) (15Y24 ASHB5 Cast #) 2013-Up	1	
333430A	Solenoid, RE0F10E/F10J Select (3.520”Long Black)(2 Prong Connector)(15Y25 ASHB5M) 2013-Up	1	
333435A	Solenoid, RE0F10E/F10J Secondary (3.520”Long)(Black)(2 Prong Connector)(15Y24 ASHB5 Cast #) 2013-Up	1	
212436A	Sensor, RE0F10E/F10J Input / Output Speed In Case (90 Degrees)(2.215”Long)(3 Pin Oval Connectors) 2013-Up (Also Fits RE0F10E Primary Pulley Speed (In Rear Cover)	1-3	
333438A	(Use 212436A)	1	
333439A	(Use 212436A)	1	
333446A	Wire Harness, RE0F10E/F10J Internal (16 Pin Green Connector)(5-2 Prong Connector)(2-3 Wire Connector)(1 Ground)(5 Bolt Plate) 2013-Up	1	
333446B	Wire Harness, RE0F10E/F10J Internal (22 Pin Black Case Connector)(Temperature Sensor)(Gray Female 17 Hole Connector) 2013-Up	1	

PART #	MISCELLANEOUS COMPONENTS	QTY	REFERENCE #
333488A	Plug, RE0F10E/F10J Pressure On Rear Cover (10mm Allen Head)(.925”OD)(.750”Long)(.700”OD Right Hand Threads) 2013-Up	1	
212492A	Drain Plug, RE0F10E/F10J In Bottom Pan (19mm Hex x .665”Long) 2013-Up	1	
323492A	Drain Plug, RE0F10E/F10J Partial (10mm Allen Head)(1.095” / .860”OD)(.750”Long)(In Case Below Filler Tube) 2013-Up	1	
323507-1A	Valve, RE0F10E/F10J Pressure Regulator In Pump (1.655”Long)(.670”OD) 2013-Up	1	
323507-3A	Spring, RE0F10E/F10J Pressure Regulator (In Pump) (1.645”Long)(.495”OD) 2013-Up	1	
323507-6A	Plug, RE0F10E/F10J Pressure Regulator (In Pump) (.630”Thick)(1.100”OD)(.860”ID)(Right Hand Threads)(11mm Allen Head) 2013-Up	1	
212507-6B	Plug, RE0F10E/F10J Pump Body Pressure (19mm Hex x .550”Thick)(.550”OD Threads) 2013-Up	1	
S212507A-1	Valve, RE0F10E Pump Flow Control Valve 2007-Up	1	
S212507AA-1	Valve, RE0F10E Pump Flow Control (Oversized) 2007-Up (Sonnax) (Must Use T-F-33510N-TL)	1	

PART #	HARDPARTS	QTY	REFERENCE #
343500A	Pump, RE0F10E/F10J (Cast # On Pump Body Is KA6X0623E9)(4 Bolt) 2007-Up	1	
343510A	Pump Body, RE0F10E/F10J (4 Bolt)(Aluminum)(1.100”ID Filter Opening) (Cast # KD3Z22D4M8) 2013-Up	1	
212519A	Pump Cover, RE0F10E/F10J (Cast Iron)(4 Bolt)(1.720”Thick)(One Threaded Boss On Top) 2013-Up	1	
212525A	Chain, RE0F10E/F10J Pump Drive (38 Links)(.240”Thick)(No Pins Included) 2013-Up	1	
333526A	Sprocket, RE0F10E/F10J Pump Drive (35 Teeth)(4 Converter Slots)(.395”Thick)(2.690”OD) (.110”Thick At Teeth) 2013-Up	1	
212527A	Sprocket, RE0F10E/F10J Pump Driven (31 Teeth)(.482”Thick)(.110” At Teeth)(2.375”OD) (.468”OD At Shaft)(14 Splines) 2013-Up	1	
323528A	Spacer Plate, RE0F10E/F10J Pump (Rear)(2.180”OD)(.595”ID)(.363”Thick)(2 Oval Hole, 2 Slots & 2 Guide Pins) 2013-Up	1	
212529-1A	Bracket, RE0F10E/F10J Converter Reactor To Pump Assembly (.155”Thick)(2.470”Long) (2 Bolt Holes) 2013-Up	1	
333529A	Converter Reactor, RE0F10E/F10J (7 Bolt Cast Iron)(32 Splines)(Cast # KM2 CVT-8 5Z03-1) (3.270”Tall) 2013-Up	1	
212532A	Rotor, RE0F10E/F10J Pump (.865”Thick)(12 Slots)(18 Splines)(1.495”OD) 2013-Up	1	
212533A	Vanes, RE0F10E/F10J Pump (.052”Thick)(.865”Long)(.315”Wide) 2013-Up	12	
212534A	Slide, RE0F10E/F10J Pump (Outer)(2.120”OD)(.865”Thick)(Has Two Alignment Pin Holes) 2013-Up	1	
333554A	Drum, RE0F10E Forward (3 Clutch)(30 Teeth Steels)(48 Teeth Reluctor)(1.970”Thick)(24 Splines) 2013-Up	1	
343554D	Drum, RE0F10J Forward Clutch (24 Splines)(3 Clutch)(32 Teeth Steels)(1.405”Thick) 2014-Up	1	
343576D	Clutch Hub, RE0F10J Reverse (1.650”ID)(1.410”At Edge) (40 Clutch Splines) 2014-Up	1	
333587A	Planet, RE0F10E Reverse (4 Gear)(Left Angle)(1.570” At Edge)(14 Teeth Gears)(40 Spline Hub) 2013-Up	1	
343587D	Planet, RE0F10J Reverse (8 Gears)(Steel)(1.040”Thick)(Left Angle) 2014-Up	1	
343592A	Ring Gear, RE0F10E Front Planet (110 Teeth)(30 Lugs) (.635”Thick) 2013-Up	1	
343592D	Ring Gear, RE0F10J Reverse Planet (94 Teeth)(40 Lugs)(.641”Thick) 2014-Up	1	
212617A	Sungear, RE0F10E Reverse Planet (82 Teeth Right Angle)(3.685”OD)(36 Teeth Clutch Hub) 2013-Up	1	
343617D	Sungear, RE0F10J Reverse Planet (2.548”OD Gear)(46 Teeth) (Left Angle)(36 Teeth Clutch Hub) 2014-Up	1	
343670A	Shaft, RE0F10E/F10J Input (7 1/16”Long)(20 Splines On End) (22 Splines On Rear) 2013-Up	1	

© Whatever It Takes Transmission Parts. Inc.

343671A.....Shaft, RE0F10E/F10J Pump Drive (3.550"Long)(.392"OD Pilot)(18 Splines & 14 Splines On End) .....2013-Up .....1 .....
343694A.....Retainer, RE0F10E/F10J Primary Bearing To Rear Cover (2.975"ID)(.180"/.285"Thick) 2013-Up 1 .....
343696A.....Bracket, RE0F10E/F10J Secondary (3 Bolt Holes)(3 Dial Pins) (3.955"ID) 2013-Up .....1 .....
343698A.....Oil Deflector, RE0F10E/F10J Differential To Bell (3 Bolt Tin) (1.650"Tall)(8 7/8"Long) 2013-Up .1 .....
343700A.....Chain, RE0F10E (75 Pins) (1.235"Long)(1.010" Between Pins Wide) 2013-Up.....1 .....
343700D.....Chain, RE0F10J (74 Pins) (1.235"Long)(.975" Between Pins Wide) 2014-Up .....1 .....
343701-1A.....Pins, RE0F10E/F10J Guide (Aluminum)(3.320"Long)(.395"OD) 2013-Up .....2 .....
343701AK.....Chain Oiler, RE0F10E/F10J Guide (Plastic)(5.940"Long)(2.005"Wide)(4 Half Pieces Makes .....2 Whole Pieces) 2013-Up .....1 .....
333702-1A.....Cover, RE0F10E/F10J Driven Sprocket (Tin)(Held By 2 Nuts To #702)(2 Holes)(5 3/4" Long) .....2013-Up .....1 .....
343702A.....Shield, RE0F10E/F10J Over Pump & Under Differential (Tin)(4 Bolts) (2 Studs)(12 3/8" Long) .....2013-Up .....1 .....
343705-1A.....Guide Roller, RE0F10E/F10J Primary Pulley (.525"Long)(.235"OD) 2013-Up .....1 .....
343705-2A.....Plate Guide, RE0F10E/F10J Primary Pulley (Rear)(2.195"Long) 2013-Up .....1 .....
343705A.....Pulley Half, RE0F10E/F10J Primary (7 5/8"Long)(6 3/4"OD) (38 Splines)(Front Half) 2013-Up .1 .....
343706A.....Pulley Half, RE0F10E Secondary (2.740"Tall)(6 3/4"OD)(Front) 2013-Up .....1 .....
343706D.....Pulley Half, RE0F10J Secondary (2.740"Tall)(6 3/4"OD)(Front)(Spring Seat Is .320"Tall) .....2014-Up .....1 .....
343707A.....Pulley Half, RE0F10E/F10J Primary (Rear)(2.425"Tall) (6 3/4"OD)(1.950"ID) 2013-Up .....1 .....
333708-1A.....Roller Guide, RE0F10E/F10J Secondary Pulley (.522"Long)(.232"OD) 2013-Up .....3 .....
343708A.....Secondary Pulley Half, RE0F10E/F10J (Rear)(10 1/4"Long) (6 3/4"OD)(30 Splines) 2013-Up ..1 .....
343710A.....Gear, RE0F10E Secondary Driven Transfer (25 Teeth) (Right Angle, One Groove) 2013-Up .....1 .....
343710D.....Gear, RE0F10J Secondary Drive (26 Teeth)(3 Grooves) (Right Angle)(2.760"OD)(1.236"Thick) .....2014-Up .....1 .....
343712A.....Gear, RE0F10E Driven Transfer (48 Teeth)(1 Groove On Edge) (4.835"OD)(1.255"Thick) .....(1.180"At Edge)(32 Spline) 2013-Up .....1 .....
343712D.....Gear, RE0F10J Driven Transfer (47 Teeth)(3 Grooves)(4.745"OD)(1.180"Thick At Edge) .....(32 Spline) 2004-Up
343716A.....Differential Housing, RE0F10E (1.785"OD Nose)(6.300"Tall)(10 Bolt) (2 Windows) 2013-Up .....1 .....
343716D.....Differential Housing, RE0F10J (AWD)(2.365"OD Nose) (6.505"Tall)(10 Bolt) (2 Windows) .....2014-Up .....1 .....
343720A.....Ring Gear, RE0F10E/F10J Differential (61 Teeth) (Right Angle 2 Grooves) (10 Bolt)(1.500"Thick) .....(7.665"OD) 2013-Up .....1 .....
343730A.....Pinion, RE0F10E/F10J (21 Teeth)(2 Grooves)(4.545"Long)(2.830"OD Gear)(32 Splines) .....2013-Up .....1 .....
333740A.....Valve Body, RE0F10E/F10J (5 Solenoids, 2 Pressure Switches)(ARO M2B Cast #) 2013-Up .....1 .....
333741-1A.....Manual Valve, RE0F10E/F10J For VB (Aluminum)(4.315"Long)(.470"OD)(3 Lands)(.235"/.315" .....Between Lands) 2013-Up .....1 .....
343750A.....Bell Housing, RE0F10E (24 Bolts To Case)(3" Top Bolts) (2 O'clock Open Starter)(29X0A & .....AMX Casting) 2013-Up .....1 .....
343750D.....Bell Housing, RE0F10J (AWD)(24 Bolts To Case)(3" Top Bolts)(2 O'Clock Open Starter)(29X1E .....Casting)(5 Threaded Holes) (3 Unthreaded Holes For Torq Converter) 2014-Up.....1 .....
343759A.....Rear Cover, RE0F10E/F10J (19 Bolts)(4 Mount Bosses) (Speed Sensor)(Cast # 29X0B AMX#2) .....2013-Up .....1 .....
343760A.....Case, RE0F10E/F10J (2 Speed Sensors)(Cast # ASO)(19 Bolt Pan) (24 Bolts To Bell Housing) .....2013-Up .....1 .....
343761A.....Plug Pressure Tap, RE0F10E/F10J On Case (14mm Hex x .670"Long) 2013-Up .....6 .....
343765A.....Pan, RE0F10E (19 Bolts, 2 Dowel Pin Holes W/ Drain Plugs)(6 Round Magnet Dimples) .....2013-Up .....1 .....
343765D.....Pan, RE0F10J (19 Bolts)(2 Dowel Pin Holes W/ Drain Plug) (7 Round Magnet Dimples) 2014-Up .....(Can Retro 343765A).....1 .....
343769A.....Housing, RE0F10E/F10J External Cooler To Filter (Aluminum)(4 Bolt)(1.960"Tall) 2013-Up .....1 .....
343776AK.....Bolt Set, RE0F10E/F10J Bell Housing To Case (14mm Hex x 1.490"Long) (24 Pieces) 2013-Up.1 .....
212777AK.....Bolt Set, RE0F10E/F10J Pump To Case (3-6mm Allen x 3.070" Long)(1-12mm Hex x 1.685"Long) .....(4 Pieces) 2007-Up .....1 .....
323778AK.....Bolt Set, RE0F10E/F10J Pump Cover To Pump Body (4 Pieces)(10mm) 2013-Up .....1 .....
333779AK.....Bolt Set, RE0F10E/F10J Bottom Pan To Case (19pcs)(10mm x .945"Long) 2013-Up.....1 .....
212780AK.....Bolt Set, RE0F10E/F10J Converter Reactor To Case (12mm Hex x 1.405"Long)(7 Pieces) .....2013-Up .....1 .....
212781AK.....Bolt Set, RE0F10E/F10J Rear Cover To Case (14mm Hex x 1.500"Long)(19 Pieces) 2013-Up....1 .....
212783AK.....Bolt Set, RE0F10E/F10J Rear Cover To Bearing Retainers (Both)(3 Pieces Each) .....(12mm Hex x 1.430" Long) 2013-Up.....1 .....
343786AK.....Bolt Set, RE0F10E/F10J Ring Gear To Differential (10 Pieces) (17mm 6pt x 1.275"Long) .....2013-Up .....1 .....
333791AK.....Bolt Set, RE0F10E/F10J Valve Body To Case (10-10mm x 2.345")(2-10mm x 1.950") .....(2-10mm x 1.200")(14 Pieces) 2013-Up.....1 .....
333795A.....Nut, RE0F10E/F10J Primary Rear (46mm Hex)(1.220"ID)(Right Hand Threads)(.475"Thick) .....2013-Up .....1 .....

© Whatever It Takes Transmission Parts. Inc.

PART #	HARDPARTS (Continued)	QTY	REFERENCE #
212796A	Nut, REF010E/F10J Pinion (6 Point Hex)(32mm)(Right Hand Threads)(.985"ID)(.485"Thick) 2013-Up	1	
333797A	Nut, RE0F10E/F10J Secondary Pulley (Front)(40mm Hex)(6 Point)(.985"ID)(Left Hand Threads) (.515"Thick)(1.770"OD) 2013-Up	1	
343797B	Nut, RE0F10E/F10J Primary Pulley (Rear)(55mm)(6 Point)(.365"Thick) 2013-Up	1	
323799-1A	Nut, RE0F10E/F10J Holds Internal Lever To End Of Shaft (14mm Hex)(Right Hand Threads) 2013-Up	1	
323799A	Nut, RE0F10E/F10J Holds External Linkage To Shaft (14mm Hex)(RH Threads) 2013-Up	1	
212843A	Clip, RE0F10E/F10J Case Connector To Case (1.300"Long)(.050"Wire)(1.080"Wide) 2013-Up	1	
333843A	Pin, RE0F10E/F10J Solenoid Retainer (.770"Long)(.310"OD Head)(.115"OD Stem) 2013-Up	4	
343845A	Reluctor, RE0F10E/F10J Primary Speed (36 Teeth)(.785"Tall) (1.380"ID)(5.625"OD) 2013-Up	1	
333853A	Cushion, RE0F10E/F10J Forward (Waved)(5.480"OD)(4.960"ID)(.060"Thick) 2013-Up	1	
333860A	Snap Ring, RE0F10E/F10J Secondary Pulley Half (Wire)(1.870"OD)(.095"Thick)(Front & Rear) 2013-Up	1	
343860B	Snap Ring, RE0F10E/F10J Secondary (Rear)(1.590"OD)(.090"Thick) 2013-Up	1	
343862A	Snap Ring, RE0F10E Holds Retainer To Secondary Pulley (.073"Thick)(.160"Wide) 2013-Up	1	
323870A	Snap Ring, RE0F10E/F10J Ball Bearing To Pump Cover (.985"OD)(.022"Thick)(2 Ears) 2013-Up	1	
333876A	Snap Ring, RE0F10E Holds Low Clutch Pressure Plate In Case (Top)(.090"Thick)(5.770"OD) 2013-Up	1	
343876D	Snap Ring, RE0F10J Reverse Planet To Forward Drum (5.865"OD)(.078"Thick) 2014-Up	1	
333877A	Snap Ring, RE0F10E Holds Forward Piston Kit In Drum (2.765"OD)(.045"Thick)(.115"Wide) 2013-Up	1	
343877D	Snap Ring, RE0F10J Forward Holds Piston Kit In Drum (2.712"OD)(.040"Thick) 2014-Up	1	
212878A	Snap Ring, RE0F10E Forward Drum To Ring Gear (Front)(.072"Thick)(5.930"OD) 2013-Up	1	
343878D	Snap Ring, RE0F10J Reverse Ring Gear To Reverse Clutch Hub (6 3/8"OD)(.070"Thick) 2014-Up	1	
212880A	Snap Ring, RE0F10E/F10J Input Shaft To Forward Drum (1.060"OD)(.045"Thick)(.075"Wide) 2013-Up	1	
212892A	Snap Ring, RE0F10E Reverse Clutch To Case (.115"Thick)(7 3/4"OD)(.155"Wide) 2013-Up	1	
343892D	Snap Ring, RE0F10J Reverse Clutch To Case (7 3/4"OD)(.102"Thick) 2014-Up	1	
343893A	Snap Ring, RE0F10E/F10J Reverse Retainer To Case (4.780"OD)(.050"Thick)(.160"Wide) 2013-Up	1	
323897A	Snap Ring, RE0F10E/F10J Bearing To Driven Sprocket (2 Eyelets)(.560"OD)(.037"Thick) 2013-Up	1	
343899A	Snap Ring, RE0F10E/F10J Primary Bearing To Case (4.300"OD)(.040"Thick) 2013-Up	1	
343960A	Piston, RE0F10E/F10J Secondary (3.130"Tall)(5.898"OD) 2013-Up	1	
333964A	Piston, RE0F10E (JF016E) Forward Clutch (Bonded)(5.435"OD)(2.730"ID)(SKF 11613-55001) 2013-Up	1	
343964D	Piston, RE0F10D Forward Clutch (Bonded)(5.435"OD)(2.670"ID)(Cast SKM) 2014-Up	1	
343966A	Piston, RE0F10E Reverse (Aluminum)(1.595"Tall) (24 Spring Pocket) 2013-Up	1	
343966D	Piston, RE0F10J Reverse (Aluminum)(1.595"Tall)(30 Spring Pockets) 2014-Up	1	
333970A	Spring, RE0F10E Secondary Piston Return (3.450"Tall)(3.300"OD)(.295"Coil) 2013-Up	1	
343970D	Spring, RE0F10J Secondary Piston Return (3.195"Tall) (3.300"OD)(.195"Coil) 2014-Up	1	
343974A	Return Spring, RE0F10E Forward (22 Springs)(970"Thick)(3.918"OD)(3.255"ID) 2013-Up	1	
343974D	Return Spring, RE0F10J Forward (24 Springs)(.790"Thick)(3.145"ID) 2014-Up	1	
343976A	Retainer, RE0F10E Reverse (24 Springs)(4 Sets Of 6) (4.630"OD)(.815"Tall) 2013-Up	1	
343976D	Retainer, RE0F10J Reverse (15 Springs)(5.930"OD)(.870"Tall) 2014-Up	1	
343980A	Retainer, RE0F10E Secondary (1.960"Tall)(5.970"OD) 2013-Up	1	
333981A	Piston, RE0F10E/F10J Primary (6.290"OD)(.910"Tall)(Steel)(1.350"ID) 2013-Up	1	
333984A	Retainer, RE0F10E Forward Clutch (Bonded)(5.040"OD)(2.735"ID)(.800"Tall) 2013-Up	1	
343984D	Retainer, RE0F10J Forward Clu (Bonded)(5.040"OD)(2.630"ID)(.600"Tall) 2014-Up	1	
323991-1A	Lever, RE0F10E/10J (Internal) (2.240"Long)(.125"Thick) 2013-Up	1	
323991-2A	Detent Spring, RE0F10E/F10J Linkage 2013-Up	1	
333991-3A	Rooster Comb,RE0F10E/F10J (5 Detents)(.475"ID Hole)(.755"Thick) 2013-Up	1	
333991-4A	Shaft, RE0F10E/F10J Linkage (14" Long)(.470"OD) 2013-Up	1	
333991-5A	Pin, RE0F10E/F10J Holds Linkage Shaft In Case (1.395"Long)(.115"OD) 2013-Up	1	
323991-6A	Pin, RE0F10E/F10J Holds Rooster Comb To Shaft (1" Long)(.160"OD) 2013-Up	1	
212992A	Shift Lever, RE0F10E/F10J External (.155"Thick)(2 Bends 2 Slots & 1 Hole)(3.095"Tall) 2013-Up	1	
212994-1A	Actuator, RE0F10E/F10J Park Rod (2 Holes) (.395"ID)(2.755"Long)(.355"Thick) 2013-Up	1	
343994A	Park Rod, RE0F10E/F10J (6 9/16" Long)(.800"OD)(One Bend) 2013-Up	1	
343995AK	Park Pawl Assembly, RE0F10E (Bracket Has One Dial Pin, 3 Holes & .300"Thick)(No Threaded Holes On Bracket) 2013-Up	1	
343998A	Cooler, RE0F10E/F10J External (4 Bolt Squares)(4 Elbow Lines) (1.405"Thick)(Like the F10D But, Tubes Point Upward More) 2013-Up	1	
343999-1A	Oiler Tube, RE0F10E/F10J In Case For Chain (Lower)(2 Bends) (2.145"long) 2013-Up	1	
343999-1B	Oiler Tube, RE0F10E/F10J In Case For Chain (Upper)(Straight) (2.145"Long) 2013-Up	1	

© Whatever It Takes Transmission Parts. Inc.

212999-6A ..... Oil Tube, RE0F10E/F10J Differential To Bell Housing (.250”OD)(6 Bends)(8 7/16”Long) 2013-Up1 .....

© Whatever It Takes Transmission Parts. Inc.

002
Overhaul Kit

119
Friction Module

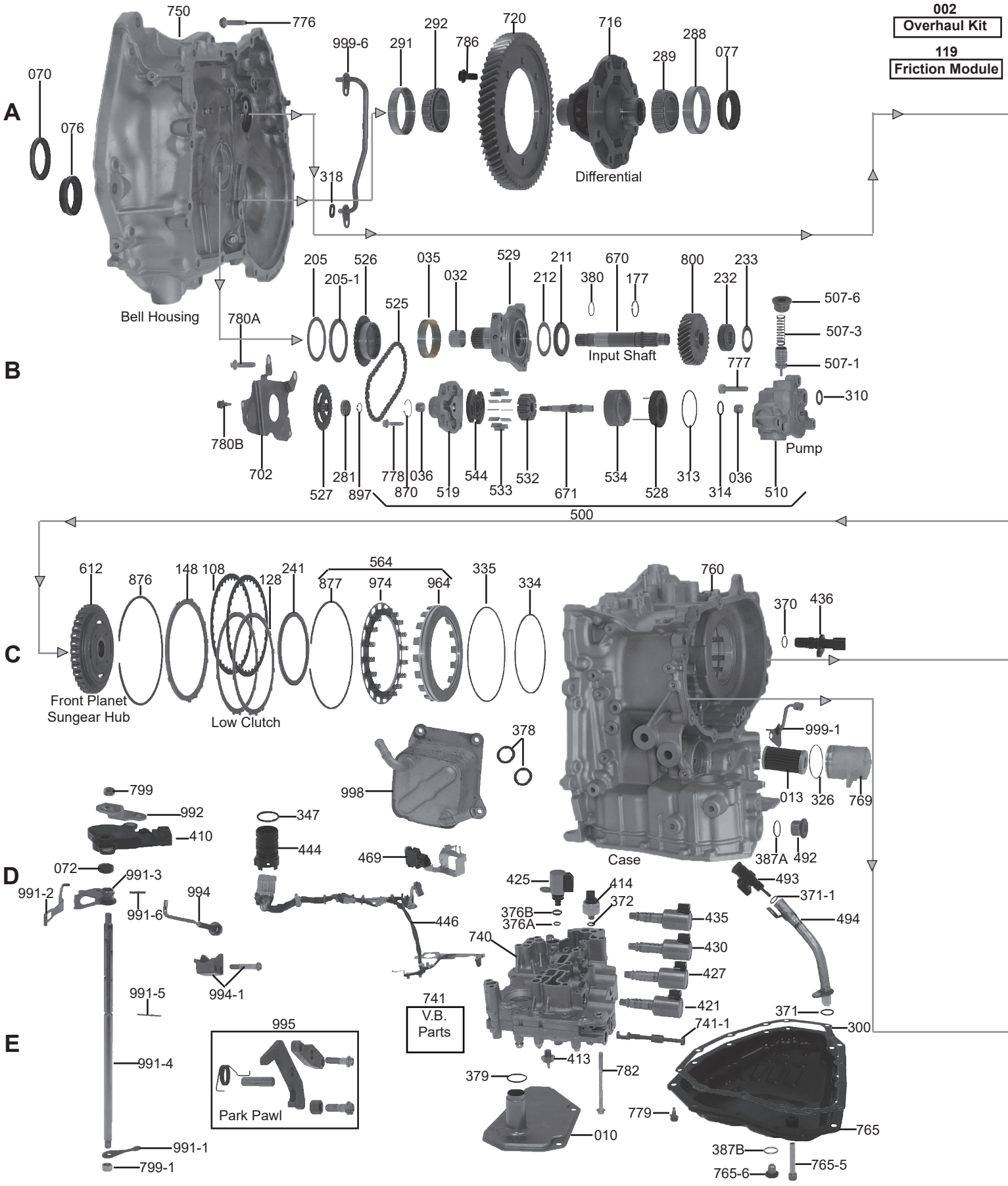

© Whatever It Takes Transmission Parts. Inc.

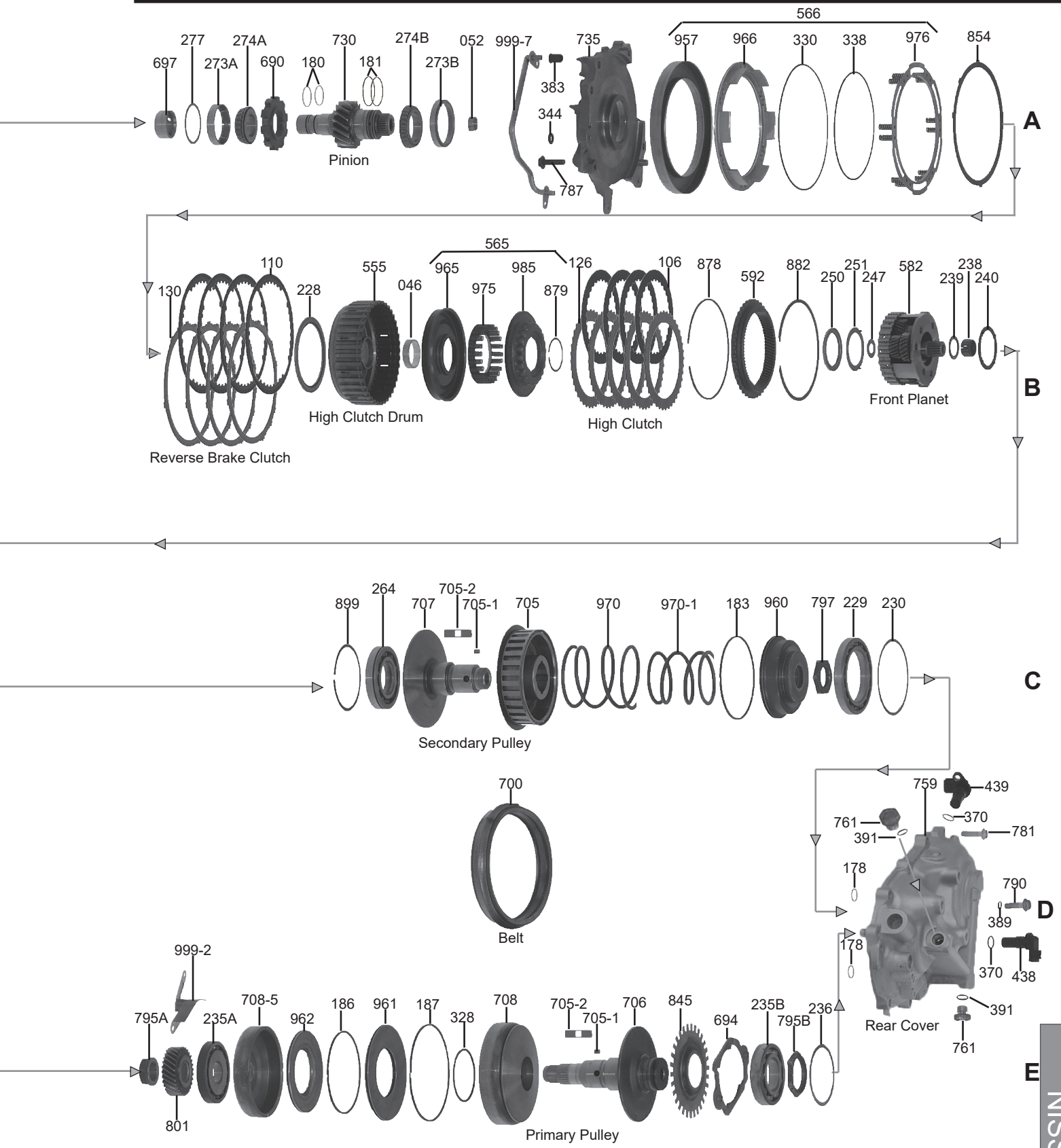

1-800-940-0197

© Whatever It Takes Transmission Parts. Inc.

PART #	OVERHAUL KITS	QTY	REFERENCE #
323002AF	Overhaul Kit, RE0F11A(JF015E) 2010-Up (CVT FWD) Applications: Citroen/Mitsubishi/Nissan/ Samsung/Suzuki	1	

PART #	FILTERS	QTY	REFERENCE #
323010A	Filter, RE0F11A (JF015E) (Metal Screen)(2 1/4"Tall Neck)(1.080"OD Neck)(Retangle Pick-Up) (3 Bolts) 2013-16	1	
323013A	Filter, RE0F11A (JF015E) Auxiliary External (1.420"OD)(2.550"Long)(Cartridge Type W/ Seal) 2013-16	1	

PART #	BUSHINGS	QTY	REFERENCE #
323030A	Bushing Kit, JF0115E (RE0F11A) 2010-Up	1	
323032A	Bushing, RE0F11A (JF015E) Input Shaft To Converter Reactor (.825"ID)(.950"OD) (No Grooves)(.615"Wide) 2013-16	1	
323035A	Bushing, RE0F11A (JF015E) Pump Drive Gear To Converter Reactor (2.070"ID)(2.230"OD) (.495"Wide)(W/Oil Pockets) 2013-16	1	
323036A	Bushing, RE0F11A (JF015E) Pump Cover To Shaft (.395"ID)(.475"OD)(.500" Wide) 2013-16 (Also Fits RE0F11A (JF015E) Pump Body To Shaft (2013-16)	1-2	
323046A	Bushing, RE0F11A (JF015E) High Clutch Drum (1.490"ID)(.225"Wide)(1.595"OD)(2 Grooves) 2013-16	1	
323052A	Bushing, RE0F11A (JF015E) Pinion (Rear)(.510"ID) (.625"OD)(.270"Wide) 2013-16	1	

PART #	METAL CLAD SEALS	QTY	REFERENCE #
323070A	Seal, RE0F11A(JF015E) Front (2.410"OD)(1.790"ID)(.270"Thick) (NOK XH0903G) 2013-16	1	
60072	Seal, RE0F11A (JF015E) Manual Shaft (.275"Thick)(.875"OD)(In Bell Housing)	1	
323076A	Seal, RE0F11A(JF015E) Axle (2.210"OD)(1.550"ID) (NOK AH2365H) 2013-16 (Also Fits RE0F11A (JF015E) Differential Housing To Case 2013-16)	1-2	
323077A	Use 323076A.	1	

PART #	FRICTIONS	QTY	REFERENCE #
323106A	Friction, RE0F11A (JF015E) High Clutch (.063"Thick)(30 Teeth)(5.105"OD) 2013-16 (Takes 4)	4	
323108A	Friction, RE0F11A (JF015E)Low Clutch (.075"Thick)(36 Teeth)(5.660"OD) 2013-16 (Takes 2)	2	
323110A	Friction, RE0F11A (JF015E) Rev Brake Clutch (.065"Thick)(32 Teeth)(6 1/2"OD) 2013-16 (Takes 4)	4	
323119A	Fri Module, JF015E 2010-Up	1	

PART #	STEELS	QTY	REFERENCE #
323126A	Steel, JF015E (RE0F11A) High Clutch (.076"Thick)(40 Teeth) (4.050"ID) 2010-Up (Takes 5)	5	.31536-3JX0B
323128A	Steel, RE0F11A (JF015E) Low Clutch (10 Teeth)(.053"Thick)(5.090"ID) 2013-16 (Takes 2)	2	
323130A	Steel, RE0F11A (JF015E) Rev Brake Clutch (.075"Thick)(12 Teeth) (5.903"ID) 2013-16 (Takes 4)	4	
323134A	Steel, JF015E (RE0F11A) Low Clutch 2010-Up	1	.31666-3JX0A

PART #	PRESSURE PLATES	QTY	REFERENCE #
323148A	Pressure Plate, RE0F11A (JF015E) Low Clu (Top)(10 Teeth)(.145"Thick)(5.090"ID) 2013-16	1	

PART #	SEALING RINGS	QTY	REFERENCE #
323177AT	Ring, RE0F11A (JF015E) Input Shaft To Converter (Teflon)(.845"OD)(.065"Thk) 2013-16	1	
323178A	Ring, RE0F11A (JF015E) Pulley To Rear Cover (Fits Both Primary & Secondary)(.660"OD) (.065"Thick)(Double Lap Joint) 2013-16	1	
323180AT	Ring, RE0F11A (JF015E) Pinion (Front)(Teflon)(1.090"OD)(.065"Thick)(Takes 2) 2013-16	2	
323181AT	Ring, RE0F11A (JF015E) Pinion (Rear)(Teflon)(1.605"OD)(.053"Thick)(Takes 2) 2013-16	2	
323183A	Ring, RE0F11A (JF015E) Secondary Piston (4.445"OD)(.105"Thick) 2013-16	1	
323186A	Ring, RE0F11A (JF015E) Primary Pulley Front Piston (4.410"OD)(.088"Thick)(Double Lap Joint)(.110"Wide) 2013-16	1	
323187A	Ring, RE0F11A (JF015E) Primary Rear (5.180"OD)(.090"Thick)(.110"Wide Double Lap Joint) 2013-16	1	

PART #	WASHERS & BEARINGS	QTY	REFERENCE #
323205-1A	Needle Brg W/Race, RE0F11A (JF015E) Race To Drive Sprocket (2.480"OD)(1.940"ID) (.110"Thick) 2013-16	1	

© Whatever It Takes Transmission Parts. Inc.

323205A ..... Race, RE0F11A(JF015E) Bell To Drive Sprocket (Front) (2.500"OD)(2.005"ID)(.070"Thick) 2013-16 1
323211A ..... Bearing W/Races, RE0F11A (JF015E) Convertor Reactor To Input Gear (1.940"OD) (1.240"ID(.165"Thick) 2013-16 1
323212A ..... Shim, RE0F11A (JF015E) Convertor Reactor To Bearing (1.945"OD)(1.370"ID) (Selective) 2013-16 1
323228A ..... Brg W/Races, RE0F11A (JF015E) High Drum To Pinion Plate (4.125"OD)(3.330"ID) (.140"Thick) 2013-16 1
323229A ..... Ball Bearing, RE0F11A (JF015E) Secondary Pulley To Rear Cover (16 Balls)(4.135"OD)(2.757"ID) (NTN SC1469C530PX1) 2013-16 1
323230A ..... Shim, RE0F11A (JF015E) Secondary Pulley Bearing To Rear Cover (Selective)(4.115"OD) (3.780"ID) 2013-16 1
323232A ..... Ball Bearing, RE0F11A (JF015E) Counterdrive Gear To Case (NSK Sealed)(1.535"OD)(.670"ID) (17TM0SU40AL) 2013-16 1
323233A ..... Shim, RE0F11A (JF015E) Counter Drive Gear Bearing To Case (1.525"OD)(1.200"ID)(Selective) 2013-16 1
323235A ..... Ball Bearing, RE0F11A (JF015E) Primary Pulley To Case (3.345"OD)(.508"Thick) (Cast # NTN7MX2-SX06003CM09PX1VL)(13 Balls) 2013-16 1
323235B ..... Ball Bearing, RE0F11A (JF015E) Primary Pulley To Rear Cover (9 Balls)(3.345"OD) (.665"Thick)(Cast # H1204-2254 F-845409) 2013-16 1
323236A ..... Shim, RE0F11A (JF015E) Primary Pulley To Rear Cover (2.920"ID)(3.325"OD) (Selective) 2013-16 1
323238A ..... Bearing, RE0F11A (JF015E) Front Sungear To Rear Sungear (Split)(Plastic Cage)(.905"OD) (.520"Tall) 2013-16 1
323239A ..... Bearing, RE0F11A (JF015E) Front Sungear To Rear Sungear (No Races)(1.302"OD) (.080"Thick) 2013-16 1
323240A ..... Washer, RE0F11A (JF015E) Front Planet To Rear Sungear Hub (Plastic W/ 4 Round Tabs) (2.360"OD)(.070"Thick) 2013-16 1
323241A ..... Brg W/Races, RE0F11A (JF015E) Front Planet Sungear Hub To Case (4.125"OD)(.140"Thick) (3.510"ID) 2013-16 1
323247A ..... Washer, RE0F11A (JF015E) Front Planet Sungear To Pinion (Brass)(1.050"OD)(.530"ID) (.035"Thick) 2013-16 1
323250A ..... Bearing W/Race, RE0F11A (JF015E) Front Planet To Drum (2.355"OD)(1.755"ID)(.155"Thick) 2013-16 1
323251A ..... Race, RE0F11A (JF015E) Front Planet To Drum (2.395"OD) (1.755"ID)(.037"Thick)(3 Tabs) 2013-16 1
323264A ..... Ball Brg, RE0F11A (JF015E) Secondary Pulley (10 Balls) (3.345"OD)(1.770"ID)(.587" Thick) (W/Snap Ring Groove) 2013-16 1
323273A ..... Race, RE0F11A (JF015E) Pinion To Bell Housing (2.205"OD) (1.800"ID)(.430"Thick) (KOYO ST3256) 2013-16 1
323273B ..... Race, RE0F11A (JF015E) Tapered Pinion To Pinion Plate (2.560"OD)(2.190"ID) (Koyo STC4065) 2013-16 1
323274A ..... Bearing, RE0F11A (JF015E)(Tapered) Pinion To Bell Housing (1.180"ID)(23 Rollers) (KOYO ST 3256/1YD) 2013-16 1
323274B ..... Bearing, RE0F11A (JF015E)(Tapered) Pinion To Pinion Plate (1.575"ID)(28 Rollers) (KOYO STC4065) 2013-16 1
323277A ..... Shim, RE0F11A (JF015E) Pinion Bearing To Bell Housing (2.190"OD) (1.895"ID)(Selective) 2013-16 1
323281A ..... Ball Brg, RE0F11A (JF015E) Driven Sprocket (10 Balls)(10 Balls)(NTN China 6901NC3V26) (.915"OD)(.475"ID)(.235"Think) 2013-16 1
323288A ..... Use 323292A 1
323289A ..... Use 323292A 1
323291A ..... Race, RE0F11A (JF015E) Bell Housing To Differential (2.675"OD) (2.250"ID)(.570"Thick) (NSK HR32008XJ) 2013-16 (Also Fits RE0F11A (JF015E) Differintial Housing To Case (2013-16) 1-2
323292A ..... Bearing, RE0F11A (JF015E) Bell Housing To Differential (Tapered) (1.570"ID)(22 Rollers) (NSK HR32008XJ.10) 2013-16 (Also Fits RE0F11A (JF015E) Differential Housing To Case 2013-16) 1-2

PART #	GASKETS & RUBBER COMPONENTS	QTY	REFERENCE #

323300A ..... Gasket, RE0F11A (JF015E) Pan To Case (15 Holes Paper Bonded To Metal) 2013-16 1
323310A ..... Seal, RE0F11A (JF015E)(Beaded) Pump To Case (.880"OD)(.540"ID)(.090"Thick) 2013-16 1
323313A ..... O-Ring, RE0F11A (JF015E) Rear Pump Spacer To Body (2.050"OD)(.095"Thick) 2013-16 1
323314A ..... O-Ring, RE0F11A (JF015E) Rear Pump Spacer To Body (.790"OD)(.095"Thick) 2013-16 1
323318A ..... Seal, RE0F11A (JF015E) Bell To Case Pass Thru (Oval) 2013-16 1
323326A ..... O-Ring, RE0F11A (JF015E) Auxiliary Filter Housing To Case (2"OD)(.080"Thick) 2013-16 1
323328A ..... D-Ring, RE0F11A (JF015E) Primary Rear Inner (.095"Thick)(2.590"ID) 2013-16 1
323330A ..... D-Ring, RE0F11A (JF015E) Piston Outer (7"OD)(.065"Thick) 2013-16 1
323334A ..... D-Ring, RE0F11A (JF015E) Low Clutch Piston (Inner)(4.035"ID) (.070"Thick) 2013-16 1

© Whatever It Takes Transmission Parts. Inc.

PART #	GASKETS & RUBBER COMPONENTS (Continued)	QTY	REFERENCE #
323335A	D-Ring, RE0F11A (JF015E) Low Clutch Piston (Outer)(5.425"OD) (.070"Thick) 2013-16	1	
323338A	D-Ring, RE0F11A (JF015E) Reverse Brake Piston (Inner)(5.400"ID) (.065"Thick) 2013-16	1	
323339A	D-Ring, RE0F11A (JF015E) Reverse Brake Piston (Outer)(7"OD) (.065"Thick) 2013-16	1	
323344A	Seal, RE0F11A (JF015E) Transfer (Rubber) Pinion Plate To Bell Housing (.120"Thick)(.630"OD) (.350"ID) 2013-16	1	
323347A	O-Ring, RE0F11A (JF015E) Case Connector To Case (1.300"OD) (.145"Thick) 2013-16	1	
323370A	O-Ring, RE0F11A (JF015E) Input B Speed In Rear Cover (.695"OD)(.080"Thick) 2013-16 (Also Fits Input A)	1-2	
323371-1A	O-Ring, RE0F11A (JF015E) Dipstick To Tube (.570"OD) (.100"Thk) 2013-16	1	
323371A	O-Ring, RE0F11A (JF015E) Filler Tube (.740"OD)(.100"Thick) 2013-16	1	
323372A	O-Ring, RE0F11A (JF015E) Secondary Pressure Switch (.475"OD)(.080"Thick) 2013-16	1	
323376A	O-Ring, RE0F11A (JF015E) Lock-Up Solenoid (.420"OD) (.080"Thick) 2013-16	1	
323376B	O-Ring, RE0F11A (JF015E) Lock-Up Solenoid (.730"OD) (.080"Thick) 2013-16	1	
323378A	O-Ring, RE0F11A (JF015E) Cooler To Case (1.050"OD) (.150"Thick) 2013-16	2	
323379A	O-Ring, RE0F11A (JF015E) Filter To Pump (1.125"OD) (.100"Thick)(Black) 2013-16	1	
323380A	O-Ring, RE0F11A (JF015E) Input Shaft To Converter (.795"OD) (.065"Thick) 2013-16	1	
323383A	Boot, RE0F11A (JF015E) Oil Tube To Pinion Plate (.635"Long)(.300"ID) 2013-16	1	
323387A	O-Ring, RE0F11A (JF015E) Partial Drain Plug To Case (.100"Thick) 2013-16	1	
323387B	Gasket, RE0F11A (JF015E) Drain Plug To Pan (Fiber)(.720"OD)(.500"ID)(.040"Thick) 2013-16	1	
323389A	O-Ring, RE0F11A (JF015E) Rear Cover To Primary Retainer Blt (.420"OD)(.065"Thick) 2013-16	2	
323391A	O-Ring, RE0F11A (JF015E) Rear Cover Plugs (.620"OD) (.085"Thick) 2013-16	2	

PART #	ELECTRICAL COMPONENTS	QTY	REFERENCE #
323410A	Switch, RE0F11A (JF015E) PRNDL (8 Blade Rectangle Connector) (2 Bolts To Case) (31918-X420A) 2013-16	1	
323413A	Sensor, RE0F11A (JF015E) High Clutch Pressure (25psi) (1.030"Tall)(1/8"Thread-Brass Body) 2013-16	1	
323414A	Switch, RE0F11A (JF015E) Secondary Pulley Presure (3 Pin Connector On End)(.675"Long) 2013-16	1	
323420AK	Solenoid Kit, REF011A (JF015E) All 4 New OE Solenoids (Taken Off New Units)	1	
323421A	Solenoid, REF011A (JF015E) Line Pressure "A" (3.525"Long) (Cast # 13112 APNH) 2013-16	1	
323425A	Solenoid, RE0F11A (JF015E) Lock-Up (1.945"Long)(2 O-Rings) (Cast # 12Z08-3-M) 2013-16	1	
323427A	Solenoid, RE0F11A (JF015E) High Clutch & Reverse Brake "G" (3.525"Long) (Cast # 13112 APNH) 2013-16	1	
323430A	Solenoid, RE0F11A (JF015E) Low Brake "F" (3.520"Long) (Cast # 12Z14 APNL) 2013-16	1	
323435A	Solenoid, RE0F11A (JF015E) Primary Pressure "B" (3.525"Long) (Rear Of VB) (Cast # 13112 APNH) 2013-16	1	
212436A	Sensor, RE0F11A (JF015E) Input A Speed In Rear Cover (90 Degrees)(1 Bolt)(3 Blade Oval Connector) (.660"OD) 2013-16 (Also Fits RE0F11A Input B Speed In Rear Cover)	1-2	
323436A	(Use 212438A)	1	
212438A	Sensor, RE0F11A Output Speed Sensor (Straight)(3 Pin Oval Connector)(2.910"Tall) 2013-16 (Reads Off Differential)	1	
323438A	(Use 212436A)	1	
323439A	(Use 212436A)	1	
323444A	Connector, Wire Harrness To Case (22 Pins On Each End) (2.240"Long)(Plastic) 2013-16	1	
323446A	Wire Harness, RE0F11A (JF015E) Internal (22 Pin White Connector (2 Green, 4 White, 2 Black, & 1 Ground) 2013-16	1	

PART #	MISCELLANEOUS COMPONENTS	QTY	REFERENCE #
323469A	ROM Assy, RE0F11A (JF015E) 5 Pin Connector (1.485"Long) (.965"Wide)(.380"Thk) 2013-16	1	
323492A	Drain Plug, RE0F11A (JF015E) Partial (10mm Allen Head 1.095 /.860"Thick)(.750"Long) (In Case Below Filler Tube) 2013-16	1	
323493A	Dip Stick & Cap, RE0F11A (JF015E) Filler Tube (2.735"Long) (.530"OD At O-Ring) (Plastic Body & Metal Stick) 2013-16	1	
323494A	Filler Tube, RE0F11A (JF015E) (One Bolt 7" Long)(.550"OD)	1	

PART #	HARDPARTS	QTY	REFERENCE #
323500A	Pump, RE0F11A(JF015E) (4 Bolt Cover)(Cast # On Pump Body CF2Y17E1F7) 2013-16	1	
323507-1A	Valve, RE0F11A (JF015E) Press Regulator In Pump (1.655"Long) (.670"OD) 2013-16	1	
323507-3A	Spring, RE0F11A (JF015E) Press Regulator (In Pump) (1.645"Long) (.495"OD) 2013-16	1	
323507-6A	Plug, RE0F11A (JF015E) Press Regulator (In Pump) (.630"Thick) (1.100"OD)(.860"ID) (Right Hand Threads)(11mm Allen Head) 2013-16	1	
S212507A-1	Valve, RE0F11A(JF015E) Pump Flow Control Valve 2007-Up	1	

© Whatever It Takes Transmission Parts. Inc.

S212507AA-1 ..... Valve, RE0F11A(JF015E) Pump Flow Control (Oversized)2007-Up (Sonnax) (Must Use T-F-33510N-TL) 1
323510A ..... Pump Body, RE0F11A (JF015E) (3 Bolt)(Aluminum)(4 Bolt Cover) (Cast # CF2Y17E1F7) (1.100"ID Filter Neck Opening) 2013-16 1
323519A ..... Pump Cover, RE0F11A (JF015E) (4 Bolt, (Aluminum)(1.330"Thick) (Cast # KYB) 2013-16 1
323525A ..... Chain, RE0F11A (JF015E) Pump Drive (30 Links)(.235"Wide) (.180" Wide W/Out Pins) 2013-16 1
323526A ..... Sprocket, RE0F11A(JF015E) Pump Drive (37 Teeth)(2 Lugs For Convertor) (.785"Thick) (.860"OD) 2013-16 1
323527A ..... Sprocket, RE0F11A (JF015E) Pump Driven (34 Teeth)(.495"Thick) (.110" Wide Teeth) (2.625"OD)(.470"OD Shaft)(14 Splines) 2013-16 1
323528A ..... Spacer Plate, RE0F11A (JF015E) Pump (Rear)(2.180"OD) (.595"ID)(.363"Thick) (2 Oval Hole, 2 Slots & 2 Guide Pins) 2013-16 1
323529A ..... Converter Reactor, RE0F11A (JF015E)(4 Bolt Aluminum Housing) (2.725" Tall) (30 Splines) 2013-16 1
323529AK ..... Kit, RE0F11A (JF015E) Converter Reactor w/Input Shaft & Counter Drive Gear Assembly (31 Teeth On 800 Gear)(Contains: 035,032,529,211, 212,670,800 & 232) 1
323532A ..... Rotor, RE0F11A (JF015E) Pump (.630"Thick)(12 Slots) (18 Splines)(1.495"OD) 2013-16 1
323533A ..... Vanes, RE0F11A (JF015E) Pump Rotor (.052"Thick)(.630" Long) (.315"Wide) (Takes 12) 2013-16 12
323534A ..... Slide, RE0F11A (JF015E) Pump (2.120"OD)(.630"Thick) (W/2 .130"ID Alignment Pin Holes) 2013-16 1
323544A ..... Plate, RE0F11A (JF015E) Pump (Front)(.235"Thick)(2.120"OD) (.515"ID) 2013-16 1
323555A ..... Drum, RE0F11A (JF015E) High Clutch (4 Clutch)(40 Teeth)(5.600"OD) (2.070"Tall) (Stamped Steel) 2013-16 1
323564A ..... Piston Kit, RE0F11A (JF015E) Low Clutch 2013-16 1
323565A ..... Piston Kit, RE0F11A (JF015E) High Clutch 2013-16 1
323566A ..... Piston Kit, RE0F11A (JF015E) Rev Brake Clutch 2013-16 1
323582A ..... Planet, RE0F11A (JF015E) Front W/ Sungear (6 Gears)(30 Teeth Clutch Hub)(21/21 Teeth Long Gear)(28T Sungear Stays In Planet) 2013-16 1
323592A ..... Ring Gear, RE0F11A (JF015E) Front Planet (76 Teeth) (40 Lugs)(.627"Thick)(5.375"OD) 2013-16 1
323612A ..... Sun Gear Hub, RE0F11A (JF015E) Front Planet (23 Teeth) (36 Clutch Teeth)(5.015"OD) (.910"ID) 2013-16 1
323670A ..... Input Shaft, RE0F11A (JF015E) (5.365"Long)(18 Spline Each End)(.668"OD Pilot) 2013-16 1
323671A ..... Shaft, RE0F11A (JF015E) Pump Drive (3.150" Long) (18/13 Splines On Ends)(.392"OD Pilot) 2013-16 1
323690A ..... Park Gear, RE0F11A (JF015E) (10 Lugs)(34 Splines) (2.910"OD)(.428"Thick) 2013-16 1
323694A ..... Bearing Retainer, RE0F11A (JF015E) Primary Pulley To Rear Cover (2 Bolts)(5.125"Long) (3.455"Wide)(.055"/.285"Thick) 2013-16 1
323697A ..... Sleeve, RE0F11A (JF015E) Pinion To Bell Housing (1.505"OD) (1.105"ID)(.790"Tall) 2013-16 1
323700A ..... Belt, RE0F11A (JF015E) Nissan 2013-16 1
323702A ..... Chain Guard, RE0F11A (JF015E) Pump (4 Bolt)(Tin) 2013-16 1
323705-1A ..... Roller Guide, RE0F11A (JF015E) Fits Primary & Secondary Pulley (.235"OD)(.290"Long) 2013-16 1
323705-2A ..... Plate Guide, RE0F11A (JF015E) Fits Primary & Secondary Pulley (.390"Wide x 1.515"Long) (Square Hole .275" x .300") 2013-16 1
323705A ..... Secondary Pulley Half, RE0F11A (JF015E)(Rear Half) (1.800"Thk)(5.650"OD)(3 ID Square Slots & 1 Round) 2013-16 1
323706A ..... Primary Pulley Half, RE0F11A (JF015E) (7.040"Tall) (5.155"OD)(1.015"Threads Left Hand) (1.765"Threads Left Hand)(28 Splines) 2013-16 1
323706AK ..... Pulley Set w/ Belt, RE0F11A (JF015E) (Both Pulleys,Belt, & All 4 Ball Bearings)(Limited Supply) 1
323707A ..... Secondary Pulley Half, RE0F11A (JF015E)(Front Half) (4 3/8" Long)(5.415"OD)(20 ID Splines) (1.175"OD Threads) 2013-16 1
323708A ..... Priamry Pulley Half, RE0F11A (JF015E) (5.495"OD) (1.810"/1.555"ID)(1.908"Tall) 2013-16 1
323708-5A ..... Housing, RE0F11A (JF015E) Secondary Piston (Steel)(1.20"ID) (4.88"OD)(1.325"Tall) 2013-16 1
323716A ..... Differential Housing, RE0F11A (JF015E) (Less Ring Gear)(8 Bolt) (1.575"OD Noses) (4.850"Tall) 2013-16 1
323720A ..... Ring Gear, RE0F11A (JF015E) (66 Teeth)(8 Bolt)(8 3/4"OD) (1 Groove)(.915"Thick) 2013-16 1
323730A ..... Pinion Shaft, RE0F11A (JF015E) (5.270"Long)(17 Teeth)(2.545"OD) (4 Ring Grooves) (34 Spline Park)(30 Spline On End) 2013-16 1
323735A ..... Plate, RE0F11A (JF015E) Pinion (6 Bolt Cast Iron)(2.265" Long)(Cast # 2Y24F & 12Y26 BD292) 2013-16 1
323740A ..... Valve Body, RE0F11A (JF015E) (5 Solenoids)(2 Sensors) (11 Bolts To Case)(Cast # APX &APZ) (2013-14 Sentra)(2013-16 Versa)(20 Bolts Holds Together) 1
323740B ..... Valve Body, RE0F11A (5 Solenoids)(2 Sensors)(11 Bolts To Case)(Cast # 3JX)(20 Bolts Holds Together)(2012 Versa) 1
323740C ..... Valve Body, RE0F11A (JF015E) (2015-16 Sentra) (5 Solenoids)(2 Sensors)(11 Bolts To Case) 1

© Whatever It Takes Transmission Parts. Inc.

PART #	VALVE BODY COMPONENTS	QTY	REFERENCE #
323741-1A	Manual Valve, RE0F11A (JF015E) (3.920"Long Aluminium)(.470"OD) (.515" Slot For Rooster Comb) 2013-16	1	
S323741APK	Valve Kit, RE0F11A (JF015E) Primary Pulley Regulator (Oversized)(Valve & End Plug) (Requires T-F-33741F-TL2 Sold Seperately)	1	
T-F-33741F-TL2	Reamer Kit, For S323741APK	1	
S323741BPK	Valve Kit, RE0F11A (JF015E) Secondary Pulley/Pressure Regulator (Oversized)(Valve & End Plug) (Requires T-F-33741F-TL Sold Seperately)	1	
T-F-33741F-TL	Reamer Kit, For S323741BPK	1	
S323741CPK	Valve Kit, RE0F11A (JF015E) Solenoid Regulator (Oversized) (Valve & End Plug) (Requires T-F-33741F-TL Sold Seperately)	1	
T-F-33741F-TL3	Reamer Kit, For S323741CPK		
S323741ACK	Valve Kit, RE0F11A (JF015E) Torque Converter Lube Regulator (Oversized)(Valve & Plug) (Requires T-F-33741F-TL4 Sold Seperately)	1	
T-F-33741F-TL4	Reamer Kit, For S323741ACK	1	

PART #	HARDPARTS (Continued)	QTY	REFERENCE #
323750A	Bell Housing, RE0F11A(JF015E)(19 Bolts To Case)(9 3/8" Top Bolts)(2:30 Starter, Closed) (Cast # APF#2AXM) 2013-16	1	
323750B	Bell Housing, RE0F11A(JF015E)(19 Bolts To Case)(7 1/8"Top Bolts)(2:30 Starter, Closed) (Cast # APZ#1AMX) 2013-16	1	
323750C	Bell Housing, RE0F11A(JF015E)(19 Bolts To Case)(9 3/8" Top Bolts)(2:30 Starter, Closed) (Cast # FYD KH2#2) 2013-16	1	
323759A	Rear Cover, RE0F11A (JF015E) (Aluminium)(11 Bolts)(2 Sensors) (3 Mount Bosses) (Cast # APZ AMX)(2 Retainer Holes) 2013-16	1	
323760A	Case, RE0F11A (JF015E)(Cast # APO)(19 Bolts To Case) (15 Pan Bolts)(X427A Stamped) (2.205"OD Axle Seal) 2013-16	1	
323761A	Plug Press Tap, RE0F11A (JF015E) Rear Cover (.545"OD) (19mm Hex x .695"Long) 2013-16	2	
323765-5A	Plug, RE0F11A (JF015E) Fluid Check Inner (5mm Allen) (2.195"Long) 2013-16	1	
323765-6A	Plug, RE0F11A (JF015E) Fluid Check Outer (19mm Hex x .660" Long) 2013-16	1	
323765A	Pan, RE0F11A (JF015E) Bottom (15 Bolts W/ 2 5/8" Tall Fluid Check Tube)(8 Retangle Dimples) (2 Round For Magnets) 2013-16	1	
323769A	Housing, RE0F11A (JF015E) Auxiliary Filter (1 Bolt Alum) (2.385"Tall)(1.720"ID)(Tapered) 2013-16	1	
323776AK	Bolt Set, RE0F11A(JF015E) Bell To Case (19 Pieces) 2013-16 (12mm Hex x 1.520"Long) 2013-16	1	
323777AK	Bolt Set, RE0F11A (JF015E) Pump To Case (3 Pieces) (6mm Allen Head x .690" Long) 2013-16	1	
323778AK	Bolt Set, RE0F11A (JF015E) Pump Cover To Pump Body (4 Pieces)(10mm) 2013-16	1	
323779A	Bolt Set, RE0F11A (JF015E) Pan To Case (10mm Hex x .785" Long)(15 Pieces) 2013-16	1	
323780AK	Bolt Set, RE0F11A (JF015E) Converter Reactor To Case (4 Pieces)(12mm Hex x 1.400"Long) 2013-16	1	
323780BK	Bolt Set, RE0F11A (JF015E) Chain Guard To Pinion Plate (10mm Hex x .795" Long)(2 Pieces) 2013-16	1	
323781AK	Bolt Set, RE0F11A (JF015E) Rear Cover To Case (12mm Hex x 1.40"Long)(11 Pieces) 2013-16	1	
323782AK	Bolt Set, RE0F11A (JF015E) Valve Body To Case (10mm Hex x 3.615" Long)(11 Pieces) (#7 On Head) 2013-16	1	
323786AK	Bolt Set, RE0F11A (JF015E) Ring Gear To Differential Housing (8 Pieces) (15mm x 1.010"Long) 2013-16	1	
323787AK	Bolt Set, RE0F11A (JF015E) Pinion Plate To Case (13mm x 1.450"Long)(6 Pieces) 2013-16	1	
323790AK	Bolt Set, Rear Cover To Primary Retainer (12mm Hex x 1.430" Long)(2 Pieces) 2013-16	1	
323795A	Nut, RE0F11A (JF015E) Holds Priamry Pulley Gear To Pulley Shaft (.990"ID)(.540"Thick) (34mm)(Front) 2013-16	1	
323795B	Nut, RE0F11A (JF015E) Primary Pulley To Rear Cover (.280"Thick)(1"ID)(Left Hand 55mm) (6 points) 2013-16	1	
323797A	Nut, RE0F11A (JF015E) Holds Secondary Pulley Piston To Front Pulley Half (.270"Thick) (46mm Hex)(1.145"ID) 2013-16	1	
323799-1A	Nut, RE0F11A (JF015E) Holds Internal Lever To End Of Shaft (14mm Hex)(Right Hand Threads) 2013-16	1	
323799A	Nut, RE0F11A (JF015E) Holds External Linkage To Shaft (14mm Hex)(Right Hand Threads) 2013-16	1	
323800A	Gear, RE0F11A (JF015E) Counter Drive (32 Teeth, Left Angle) (3 Grooves)(.845"Thick) (2.910"OD)(18 Splines) 2013-16	1	
323800B	Gear, RE0F11A (JF015E) Counter Drive (31 Teeth, Left Angle)(No Grooves)(.720"Thick) (2.815"OD)(18 Splines) 2013-16	1	
323801A	Gear, RE0F11A (JF015E) Counter Driven (29 Teeth 3 Grooves) (.825"Thick)(2.630"OD) (28 Splines) 2013-16	1	

© Whatever It Takes Transmission Parts. Inc.

323845A ..... Reluctor, RE0F11A (JF015E) Primary Pulley (30 Fingers) (1.785”ID)(.310”Tall)(Tin) 2013-16 ..... 1 .....
323854A ..... Cushion, RE0F11A (JF015E) Reverse Brake Clutch (Beveled)(5 Teeth) (.085”Thick)(6.100”ID)
..... 2013-16 ..... 1 .....
323870A ..... Snap Ring, RE0F11A (JF015E) Ball Bearing To Pump Cover (.985”OD)(.022”Thick)(2 Ears)
..... 2013-16 ..... 1 .....
323876A ..... Snap Ring, RE0F11A (JF015E) Holds Low Clutch Pressure Plate (Top) In Case (6.130”OD)
..... (.082”thick)(.160”Wide) 2013-16 ..... 1 .....
323877A ..... Snap Ring, RE0F11A (JF015E) Holds Low Clutch Piston Retainer (6.080”OD)(.080”Thick)
..... (.140”Wide) 2013-16 ..... 1 .....
323878A ..... Snap Ring, RE0F11A (JF015E) Holds High Clutch In Drum (.085”Thick)(5.485”OD)(.115”Wide)
..... 2013-16 ..... 1 .....

323879A ..... Snap Ring, RE0F11A (JF015E) Holds High Clutch Piston Retainer (1.865”OD)(.037”Thick)
..... 2013-16 ..... 1 .....
323882A ..... Snap Ring, RE0F11A (JF015E) Holds Front Planet Ring Gear To Drum (.075”Thick)(5.505”OD)
..... (.195”Wide) 2013-16 ..... 1 .....
323897A ..... Snap Ring, RE0F11A (JF015E) Bearing To Driven Sprocket (2 Eyelets)(.560”OD)(.037”Thick)
..... 2013-16 ..... 1 .....
323899A ..... Snap Ring, RE0F11A (JF015E) Secondary Pulley Bearing To Case (3.595”OD)(.060”Thick)
..... 2013-16 ..... 1 .....
323957A ..... Retainer, RE0F11A (JF015E) Reverse Brake Piston (Tin) (5.255”ID)(7 1/8”OD) 2013-16 ..... 1 .....
323960A ..... Piston, RE0F11A (JF015E) Secondary Pulley (Steel) (4.430”OD)(1.200”ID)(1.325”Tall)
..... (.107”Wide Ring Groove) 2013-16 ..... 1 .....
323960AK..... Piston Kit, JF015E (RE0F11A) 2010-Up (Hi-Per Blue) ..... 1 .....
323961A ..... Piston, RE0F11A (JF015E) Primary Rear (Steel)(.365”Tall) (5.190”OD)(2.595”ID)
..... (.100”Wide Ring Groove) 2013-16 ..... 1 .....
323962A ..... Piston, RE0F11A (JF015E) Primary Pulley (Front)(Steel) (4.405”OD)(2.307”ID)
..... (.097” Wide Ring Groove) 2013-16 ..... 1 .....
323962AHD .... Piston, RE0F11A Primary Pulley(Front)(Billet) (TransGo) ..... 1 .....
323964A ..... Piston, RE0F11A (JF015E) Low Clutch (Aluminium)(18 Pockets) (5.360”OD)(4.050”ID)
..... (.795”Tall)(18 Lugs)(31575 3XX0A) 2013-16 ..... 1 .....
323965A ..... Piston, RE0F11A (JF015E) High Clutch (Bonded)(5.060”OD) (.530”Thick)(1.805”ID) 2013-16 ..... 1 .....
323965AK..... Piston Set, RE0F11A Forward Clutch W/ Bonded Retainer 2013-16 ..... 1 .....
323966A ..... Piston, RE0F11A (JF015E) Reverse Brake (Aluminium)(5.420”ID) (6 15/16”OD)
..... (Cast # 31645-3XX0A)(12 Spring Pockets)(6 Legs) 2013-16 ..... 1 .....
323970-1A..... Spring, RE0F11A (JF015E) Secondary Pulley Retrun (Inner) (2.870”OD)(2.940”Tall)(.215”OD Wire)
..... 2013-16 ..... 1 .....
323970A ..... Spring, RE0F11A (JF015E) Secondary Piston Return (Outer) (3.4710”OD)(3.420”Tall)
..... (.215”OD Wire) 2013-16 ..... 1 .....
323974A ..... Retainer, RE0F11A (JF015E) Low Clutch Piston (18 Springs) (5.720”OD)(4.250”ID)(.635”Tall)
..... (18 Slots) 2013-16 ..... 1 .....
323975A ..... Spring & Retainer, RE0F11A (JF015E) High Clutch (22 Springs)(.770”Thick)(3.285”OD)
..... 2013-16 ..... 1 .....
323976A ..... Spring & Retainer, RE0F11A (JF015E) Reverse Brake Clutch (12 Springs)(6 Slots)(7 1/8”OD)
..... (.850”Tall) 2013-16 ..... 1 .....
323985A ..... Retainer, RE0F11A (JF015E) High Clutch (Bonded)(22 Pockets) (4.705”OD)(1.755”ID)
..... (.750”Tall) 2013-16 ..... 1 .....
323991-1A..... Lever, RE0F11A (JF015E) (Internal)(2.240”Long)(.125”Thick) 2013-16 ..... 1 .....
323991-2A..... Detent Spring, RE0F11A (JF015E) Linkage 2013-16 ..... 1 .....
323991-3A..... Rooster Comb,RE0F11A (JF015E) (5 Detents)(.475”ID Hole)(.755”Thick) 2013-16 ..... 1 .....
323991-4A..... Shaft, RE0F11A (JF015E) Linkage (14” Long)(.470”OD) 2013-16 ..... 1 .....
323991-5A..... Pin, RE0F11A (JF015E) Holds Linkage Shaft In Case (1.395”Long)(.115”OD) 2013-16 ..... 1 .....
323991-6A..... Pin, RE0F11A (JF015E) Holds Rooster Comb To Shaft (1” Long)(.160”OD) 2013-16 ..... 1 .....
323992A ..... Shift Lever, RE0F11A (JF015E) (External)(1.200”Tall) (.155”Thick) 2013-16 ..... 1 .....
323994-1A..... Park Rod Actuator, RE0F11A (JF015E) (1.475” Long) (1.180”Thick, Stepped)(2 Holes) 2013-16 . 1 .....
323994A ..... Park Rod, RE0F11A (JF015E) (7 5/16” Long)(.855”OD Ball) 2013-16 ..... 1 .....
323995AK..... Park Pawl Assy, RE0F11A (JF015E) 2013-16 ..... 1 .....
323998A ..... Cooler, RE0F11A (JF015E) Extranal (Side Of Case)(Square Alum)(4 Bolt 2 Elbow Lines)
..... (4.015” x 4.000” Square)(2.870”Thick)(2 O-Ring Grooves) 2013-16 ..... 1 .....
323999-1A..... Oiler Tube, RE0F11A (JF015E) In Case For Belt (1 Bolt Flange S Shaped Tube)(.187”OD)
..... 2013-16 ..... 1 .....
323999-2A..... Oil Deflector, RE0F11A (JF015E) In Case For Primary Gear (Front)(2 Tin Bolts) 2013-16 ..... 1 .....
323999-6A..... Oil Tube, RE0F11A (JF015E) In Bell Housing Under Differential (8 3/4” Long)(.310”OD)
..... (Brackets On Each End) 2013-16 ..... 1 .....
323999-7A..... Oil Tube, RE0F11A (JF015E) Pinion Plate To Case (8 3/4” Long)(.310”OD)(2 One Bolt Brackets
..... On Each End) 2013-16 ..... 1 .....

© Whatever It Takes Transmission Parts. Inc.

MB1 Differential

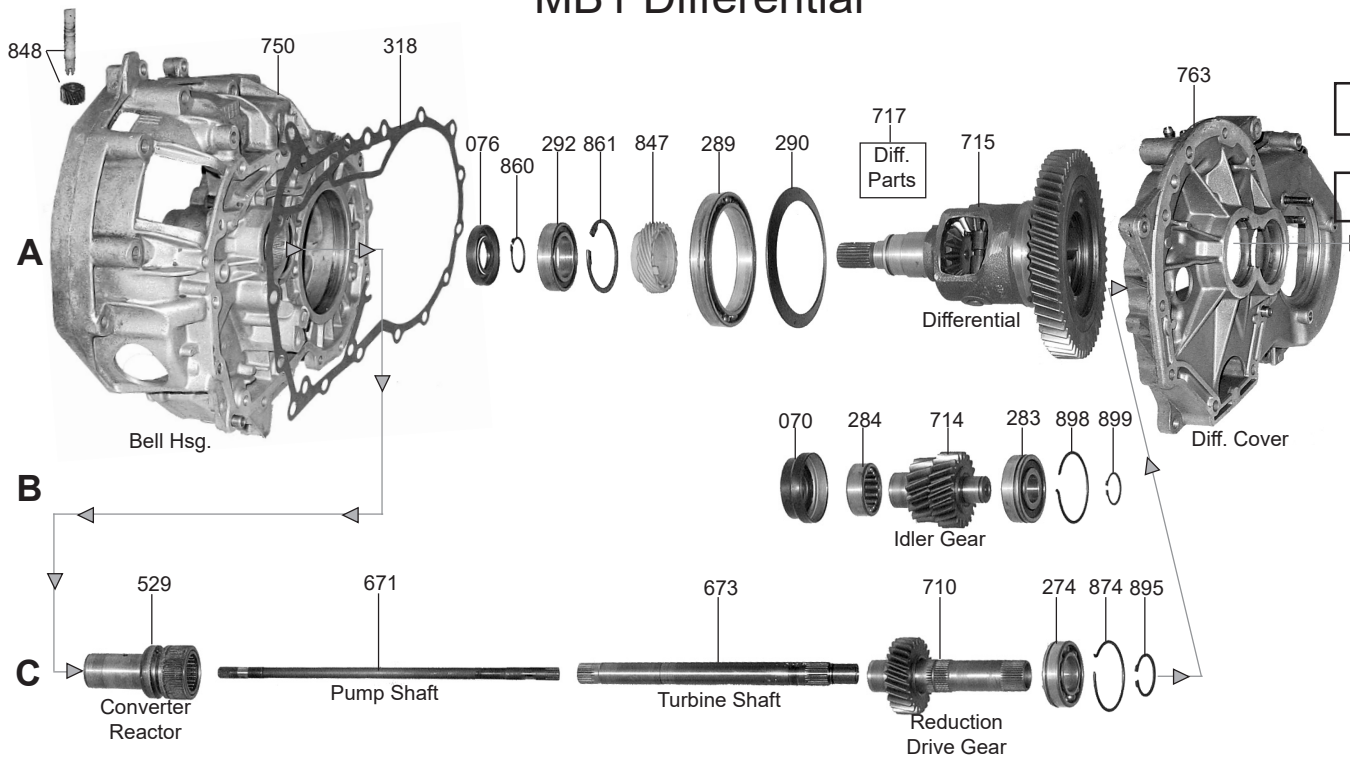

000 P&R Kit

002 OHK Kit

004 Master L/Steels Kit

006 Master W/Steels Kit

011 Filter Kit

030 Bushing Kit

175 Ring Kit

400 Tech Manual

D

E

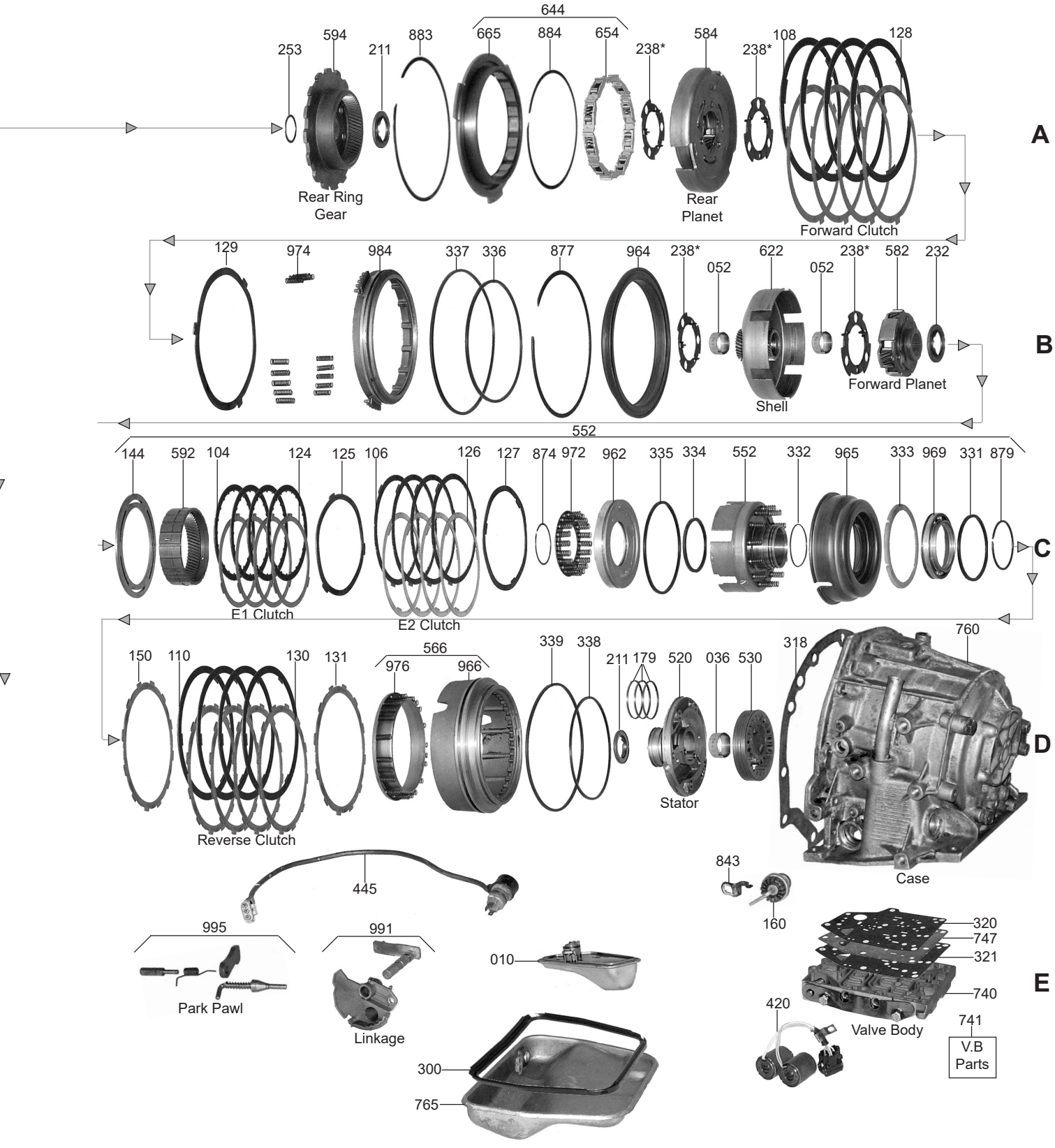

© Whatever It Takes Transmission Parts. Inc.

PART #	PAPER & RUBBER KIT	QTY.	REFERENCE #
52000A	Paper & Rubber Kit, MB1/MB3 Alliance 1983-88	1	
52000C	Paper & Rubber Kit, MJ3/MJ5 Madallion 1986-Up	1	

PART #	OVERHAUL KITS	QTY.	REFERENCE #
52002A	Overhaul Kit, MB1/MB3 Alliance 1983-88	1	
52002C	Overhaul Kit, MJ3/MJ5 Medallion 1986-Up	1	

PART #	MASTER L/STEEL KIT	QTY.	REFERENCE #
52004A	Master L/Steels Kit, MB1/MB3 Alliance (With E1/E2 Frictions) 12983-88	1	
52004B	Master L/Steels Kit, MB1/MB3 Alliance (Without E1/E2 Frictions) 1983-88	1	
52004C	Master L/Steels Kit, MJ3/MJ5 Madallion (With E1/E2 Frictions) 1986-Up	1	
52004D	Master L/Steels Kit, MJ3/MJ5 Madallion (Without E1/E2 Frictions) 1986-Up	1	

PART #	MASTER W/STEEL KIT	QTY.	REFERENCE #
52006A	Master W/Steels Kit, MB1/MB3 Alliance (With E1/E2 Frictions) 1983-88	1	
52006B	Master W/Steels Kit, MB1/MB3 Alliance (Without E1/E2 Frictions) 1983-88	1	
52006C	Master W/Steels Kit, MJ3/MJ5 Madallion (With E1/E2 Frictions) 1986-Up	1	
52006D	Master W/Steels Kit, MJ3/MJ5 Madallion (Without E1/E2 Frictions) 1986-Up	1	

PART #	FILTER	QTY.	REFERENCE #
52010	Filter, MB1/MB3/MJ1 Alliance & Encore 1983-86	1	
52010A	Filter, MJ3 Madallion 1986-Up	1	
52010C	Filter, MJ5 Fuego Sport Wagon 1984-86	1	

PART #	FILTER KIT	QTY.	REFERENCE #
52011	Filter Kit, MB1/MB3/MJ1 Alliance 1983-86	1	
52011A	Filter Kit, MJ3 Madallion 1986-Up	1	
52011C	Filter Kit, MJ3 Fuego Sport Wagon 1984-86	1	

PART #	BUSHINGS	QTY.	REFERENCE #
52030	Bushing Kit, MB1/MB3/MJ3 1983-Up	1	
52036	Bushing, MB1/MB3/MJ3 Pump Stator	1	
52052	Bushing, MB1/MB3/MJ3 Sun Gear	2	

PART #	METAL CLAD SEALS	QTY.	REFERENCE #
52070	Seal, MB1/MB3/MJ1 Front 1983-Up	1	77-03-087-135
52076	Seal, MB1/MB3/MJ1 Axle 1983-Up	2	77-03-087-144
52076C	Seal, MJ3 Axle 1986-Up	2	77-03-087-106

PART #	FRICTION CLUTCH	QTY.	REFERENCE #
52104	Friction, MB1/MJ3 E1 Clutch (.080") (21 Teeth) 1983-Up	4	77-01-596-732
52106	Friction, MB1/MJ3 E2 Clutch (.080") (3 Teeth) 1983-Up	4	
52108	Friction, MB1/MJ3 Forward Clutch (.080") 3 Teeth (7.480"OD) 1983-Up	4	77-01-462-298
52110	Friction, MB1/MJ3 Reverse Clutch (.080") 3 Teeth (7.00"OD) 1983-Up	4	77-01-462-297

PART #	STEEL CLUTCH	QTY.	REFERENCE #
52124	Steel, MB1/MJ3 E1 Clutch (.060") 3 Teeth (Flat) 1983-Up	4	
52125	Steel, MB1/MJ3 E1 Clutch (.060") 3 Teeth (Wavy) 1983-Up	1	
52126	Steel, MB1/MJ3 E2 Clutch (.060") 3 Teeth (Flat) 1983-Up	4	
52127	Steel, MB1/MJ3 E2 Clutch (.060") 3 Teeth (Wavy) 1983-Up	1	
52128	Steel, MB1/MJ3 Forward Clutch (.060") 3 Teeth (Flat) 1983-Up (Also Fits Low/Reverse)	5	
52129	Steel, MB1/MJ3 Forward Clutch (.060") 3 Teeth (Wavy) 1983-Up	1	
52130	Steel, MB1/MJ3 Reverse Clutch (.060") 12 Teeth (Flat) 1983-Up	4	
52131	Steel, MB1/MJ3 Reverse Clutch (.060") 12 Teeth (Wavy) 1983-Up	1	

PART #	CLUTCH PRESSURE PLATES	QTY.	REFERENCE #
52144	Pressure Plate, MB1/MJ3 E1-E2 Clutch	1	
52150	Pressure Plate, MB1/MJ3 Reverse Clutch	1	T0715980

© Whatever It Takes Transmission Parts. Inc.

PART #	MODULATORS	QTY.	REFERENCE #
52160	Modulators, MB1	1	

PART #	OIL SEALING RINGS	QTY.	REFERENCE #
52175	Ring Kit, MB1 Renault Alliance	1	
52179	Ring, MB1/MJ3 Pump Cover 1983-Up	3	77-01-462-295

PART #	WASHERS & BEARINGS	QTY.	REFERENCE #
52211	Bearing, MB1/MJ3 Pump Cover To E1-E2 Drum & Sun Gear To Rear Ring Gear	2	
52232	Bearing, MB1/MJ3 Planet	1	
52238A	Washer, MB1 Plastic (.060") 1983-87	1-3	
52238AA	Washer, MJ3 Plastic (.060") 1986-Up	1-3	
52238B	Washer, MB1 Plastic (.076") 1983-87	1-3	
52238BA	Washer, MJ3 Plastic (.076") 1986-Up	1-3	
52238C	Washer, MB1 Plastic (.100") 1983-87	1-3	
52238CA	Washer, MJ3 Plastic (.100") 1986-Up	1-3	
52253	Spacer, MB1/MJ3 Rear Ring Gear To Reduction Drive Gear	1	
52274	Bearing, MB1 Pinion 1983-87	1	
52274A	Bearing, MJ3 Pinion Small One (Madallion) 1986-Up	1	
52283	Bearing, MB1 Idler 1983-87	1	
52283A	Bearing, MJ3 Intermediate Shaft To Differential Case (Madallion) 1988-Up	1	
52284	Ball Bearing, MB1 On Idler (On Small Gear Side)	1	
52289	Bearing, MB1 Differential (5 1/16")	1	
52290	Shim, MB1 Under Large Ball Bearing On Differential	1	
52292	Ball Bearing, MB1 Differential To Converter Housing (Small)	1	

PART #	GASKETS & RUBBER COMPONENTS	QTY.	REFERENCE #
52300	Gasket, MB1/MJ3 Bottom Pan (Rubber)	1	77-00-680-106
52318	Gasket, MB1 Converter Housing To Differential Case	1	
52318A	Gasket, MB1 Rear Case To Differential Case	1	
52320	Gasket, MB1/MJ3 Valve Body To Case	1	
52332	Lip Seal, MB1/MJ3 E2 Clutch (Inner)	1	
52332K	Lip Seal Set, MB1/MJ3 E1 & E2 Lip Seals	1	
52333	Lip Seal, MB1/MJ3 E2 Clutch (Outer)	1	
52334	Lip Seal, MB1/MJ3 E1 Clutch (Inner)	1	
52335	Lip Seal, MB1/MJ3 E1 Clutch (Outer)	1	
52338	Lip Seal, MB1/MJ3 Reverse Clutch (Inner)	1	
52339	Lip Seal, MB1/MJ3 Reverse Clutch (Outer)	1	

PART #	TECHNICAL MANUALS	QTY.	REFERENCE #
52400	Technical Manual, MB1	1	83-MB1MJ3TM

PART #	ELECTRICAL COMPONENTS	QTY.	REFERENCE #
52420	Solenoid, MB1 (On Valve Body) Sets Of 2	1	JO747072
52449	Computer Box, MB1 (External)	1	

PART #	HARD PARTS	QTY.	REFERENCE #
52520	Stator, MB1/MJ3 Pump Cover (Aluminum)	1	
52529A	Converter Reactor, MB1 Support (.860"OD Splines) Presses In	1	
52529B	Converter Reactor, MB1 Support (No Splines) Bolt On	1	
52529C	Converter Reactor, MB1 Support (With Splines) Bolt On	1	
52529D	Converter Reactor, MJ3 Support (Madallion) 1986-Up	1	

PART #	PUMP COMPONENTS	QTY.	REFERENCE #
52530	Pump Gears, MB1/MJ3 (.668" Thick)	1	

© Whatever It Takes Transmission Parts. Inc.

PART #	HARD PARTS (Continued)	QTY.	REFERENCE #
52552A	Clutch Retainer, MB1/MJ3 E1-E2 (4 Clutch) 1983-Up	1	
52552AK	Drum Assembly, MB1/MJ3 E1-E2 (4 Clutch) 1983-87	1	
52552BK	Drum Assembly, MB1/MJ3 E1-E2 (4 Clutch) 1988-Up	1	
52552C	Clutch Retainer, MB1/MJ3 E1-E2 (5 Clutch) 1988-Up	1	
52552CK	Drum Assembly, MB1/MJ3 E1-E2 (5 Clutch) 1988-Up	1	
52566	Piston Kit, MB1/MJ3 Reverse Clutch	1	
52582A	Planet, MB1/MJ3 Forward (3 Gear With Braided Pins) 1983-87	1	
52582B	Planet, MB1/MJ3 Forward (3 Gear With Pinned Pins) 1988-Up	1	
52582C	Planet, MJ3 Forward (4 Gear With Pinned Pins) 1988-Up	1	
52584	Planet, MB1/MJ3 Rear (With Hub)	1	
52592	Ring Gear, MB1/MJ3 Forward Planet	1	
52594	Ring Gear, MB1/MJ3 Rear With Park Gear	1	
52622	Shell, MB1/MJ3 With Sun Gear (31 Teeth Both Ends)	1	
52622A	Shell, MJ3 With Sun Gear (31 Teeth On Rear & 30 Teeth On Front)	1	

PART #	SPRAGS & ONE WAY CLUTCHES	QTY.	REFERENCE #
52644	Sprag Assembly, MB1/MJ3 With Retainer	1	

PART #	HARD PARTS (Continued)	QTY.	REFERENCE #
52671	Pump Shaft, MB1 (13 1/8” Long)	1	
52671A	Pump Shaft, MB1 (12 3/4” Long)	1	
52671B	Pump Shaft, MJ3 (21 1/4” Long) Madallion	1	
52673	Turbine Shaft, MB1 (11 1/2” Long)	1	
52673B	Turbine Shaft, MJ3 (19 5/8” Long) Madallion	1	
52674	Shaft, MJ3 Intermediate (Madallion)	1	
52710	Gear, MB1 Output (Pinion) 25 Teeth	1	
52710B	Gear, MB1 Output (Pinion) 29 Teeth	1	
52710C	Gear, MJ3 Output (Medallion) 1986-Up	1	
52712	Gear, MJ3 Driven Transfer (Medallion) 1986-Up	1	
52714	Idler Gear, MB1 (2 Gears)	1	
52715	Differential Assembly, MB1	1	
52715C	Differential Assembly, MJ3	1	
52730	Pinion Gear, MJ3 (Madallion) 1986-Up	1	
52740	Valve Body, MB1 With Solenoids 1983-87	1	
52740A	Valve Body, MJ3 With Solenoids (Madallion) 1986-Up	1	
52750	Bell Housing, MB1 Less Support (Takes Press In Support)	1	
52750A	Bell Housing, MB1 Less Support (Takes Bolt On Support)	1	
52750C	Bell Housing, MJ3 Less Support (Madallion) 1986-Up	1	
52760	Case, MB1/MJ3 (Less Pump Gears)	1	
52763	Differential Case, MB1 Differential Cover	1	
52765	Pan, MB1 Bottom Pan	1	
52843	Bracket, MB1/MJ3 Modulator	1	
52847	Gear, MB1 Drive Speed-O Gear	1	
52848	Gear, MB1 Driven Speed-O Gear	1	
52860	Snap Ring, MB1 Holds Small Bearing On Differential Housing	1	
52861	Snap Ring, MB1 Holds Speed-O Gear To Differential Housing	1	
52874	Snap Ring, MB1 Holds Ball Bearing To Differential Case	1	
52877	Snap Ring, MB1/MJ3 Stop For Forward Piston	1	
52883	Snap Ring, MB1/MJ3 Holds Sprag Outer Race To Case	1	
52895	Snap Ring, MB1Holds Ball Bearing To Reduction Drive Gear	1	
52898	Snap Ring, MB1 Holds Idler Gear Ball Bearing To Differential Cover	1	
52899	Snap Ring, MB1 Holds Ball Bearing To Idler Shaft	1	
52962	Piston, MB1/MJ3 E1 Clutch (Aluminum) 1983-Up	1	
52964	Piston, MB1 Forward Clutch (Molded) 1983-87	1	
52964A	Piston, MJ3 Forward Clutch (Molded) Madallion 1986-Up	1	
52965	Piston, MB1/MJ3 E2 Clutch (Molded) 1983-Up	1	
52966	Piston, MB1 Reverse Clutch (Aluminum) 1983-87	1	
52966A	Piston, MJ3 Reverse Clutch (Aluminum) Madallion 1986-Up	1	
52969	Piston, MB1/MJ3 E2 Clutch Apply (Aluminum) 1983-Up	1	
52972	Spring, MB1/MJ3 E1 Clutch Return 1983-Up	1	
52974	Spring, MB1/MJ3 Forward Clutch Return	1	
52976	Springs With Retainer, MB1/MJ3 Reverse Clutch Return	15	
52984	Retainer, MB1 Forward Clutch (Aluminum) 1983-87	1	
52984A	Retainer, MJ3 Forward Clutch (Aluminum) Madallion 1986-Up	1	
52991	Linkage Assembly, MB1 Internal	1	
52995	Park Pawl Assembly, MB1	1	

© Whatever It Takes Transmission Parts. Inc.

© Whatever It Takes Transmission Parts. Inc.

PART #	PAPER & RUBBER KIT	QTY.	REFERENCE #
152000A	Paper & Rubber Kit, AR4 (Eagle Premier With 4 Cylinder) 1988-89	1	

PART #	OVERHAUL KITS	QTY.	REFERENCE #
152002A	Overhaul Kit, AR4 (Eagle Premier With 4 Cylinder) 1988-89	1	

PART #	MASTER L/STEEL KIT	QTY.	REFERENCE #
152004A	Master L/Steels Kit, AR4 (Eagle Premier With 4 Cylinder) 1988-89	1	

PART #	MASTER W/STEEL KIT	QTY.	REFERENCE #
152006A	Master W/Steels Kit, AR4 (Eagle Premier With 4 Cylinder) 1988-89	1	

PART #	FILTER	QTY.	REFERENCE #
152010A	Filter, AR4 (Eagle Premier With 4 Cylinder) 1988-89	1	

PART #	FILTER KIT	QTY.	REFERENCE #
152011A	Filter Kit, AR4 (Eagle Premier With 4 Cylinder) 1988-89	1	

PART #	BANDS	QTY.	REFERENCE #
152020A	Band, AR4 (Eagle Premier With 4 Cylinder) 1988-89	1	

PART #	BUSHINGS	QTY.	REFERENCE #
152030A	Bushing Kit, AR4 (Eagle Premier With 4 Cylinder) 1988-89	1	

PART #	METAL CLAD SEALS	QTY.	REFERENCE #
152070A	Seal, AR4 (Eagle Premier With 4 Cylinder) Front Pump 1988-89	1	
152072A	Seal, AR4 (Eagle Premier With 4 Cylinder) Manual Shaft 1988-89	1	
152076A	Seal, AR4 (Eagle Premier With 4 Cylinder) Right Axle 1988-89	1	
152077A	Seal, AR4 (Eagle Premier With 4 Cylinder) Left Axle 1988-89	1	

PART #	FRICTION CLUTCH	QTY.	REFERENCE #
152119A	Friction Module, AR4 (Eagle Premier With 4 Cylinder) 1988-89	1	

PART #	OIL SEALING RINGS	QTY.	REFERENCE #
152175A	Ring Kit, AR4 (Eagle Premier With 4 Cylinder) 1988-89	1	

PART #	TECHNICAL MANUALS	QTY.	REFERENCE #
152400A	Technical Manual, AR4 (Eagle Premier With 4 Cylinder) 1988-89	1	

© Whatever It Takes Transmission Parts. Inc.

© Whatever It Takes Transmission Parts. Inc.

SATURN

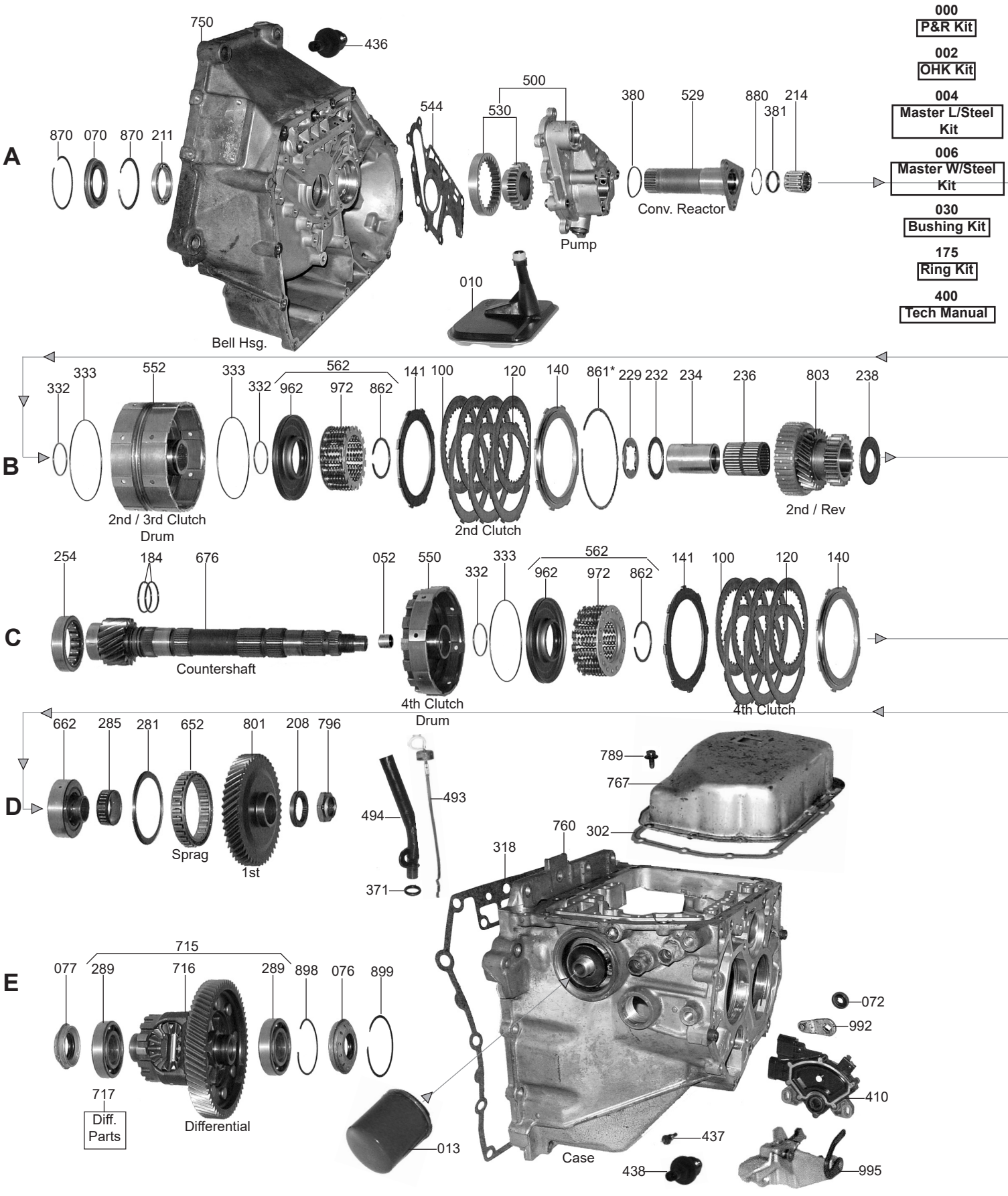

000 P&R Kit

002 OHK Kit

004 Master L/Steel Kit

006 Master W/Steel Kit

030 Bushing Kit

175 Ring Kit

400 Tech Manual

© Whatever It Takes Transmission Parts. Inc.

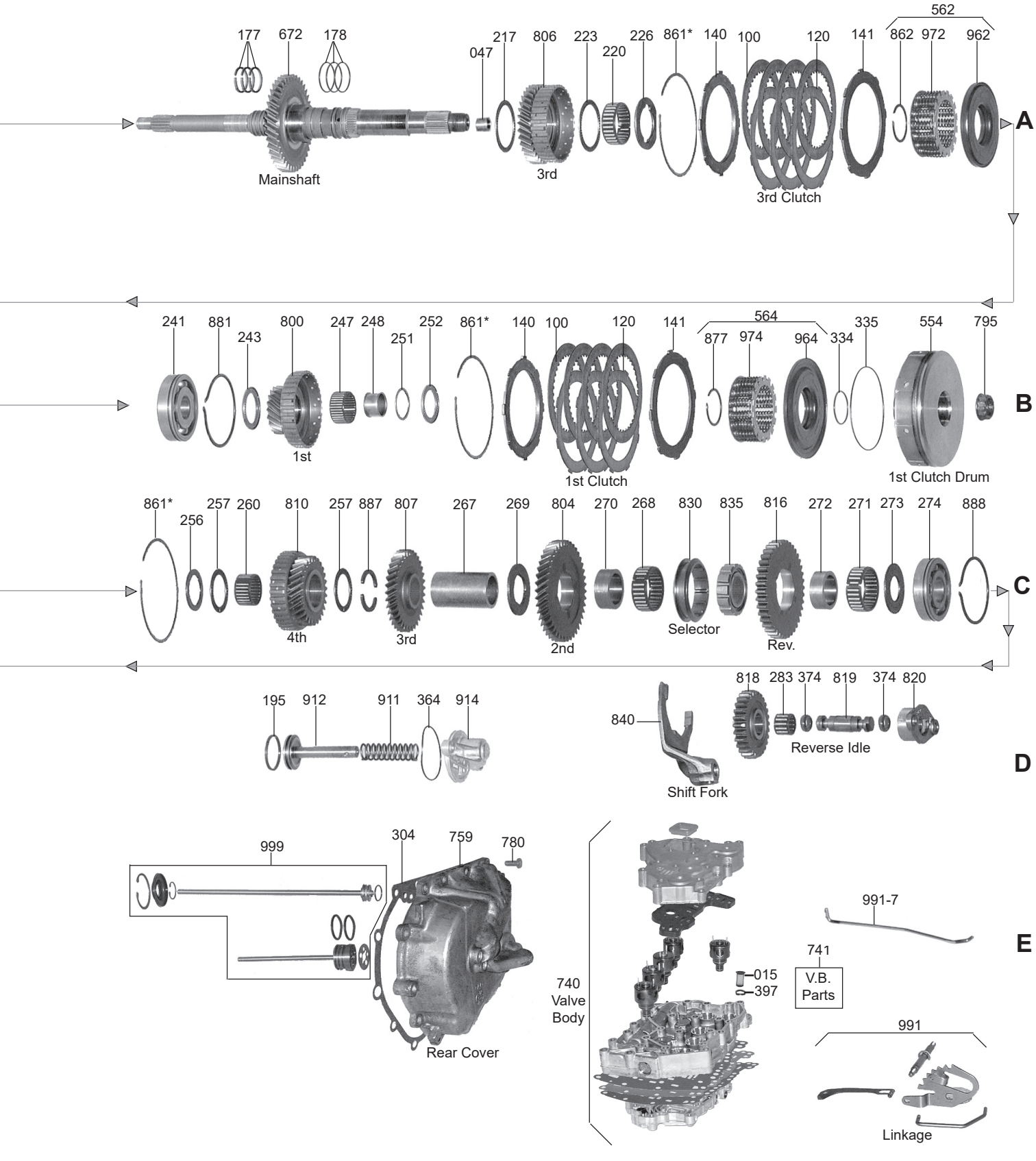

© Whatever It Takes Transmission Parts. Inc.

PART #	PAPER & RUBBER KIT	QTY.	REFERENCE #
10000A	Paper & Rubber Kit, Saturn (With Out Bonded Pistons) 1991-Up	1	

PART #	OVERHAUL KITS	QTY.	REFERENCE #
10002A	Overhaul Kit, Saturn (For Bonded Pistons Sell A10962AK) 1991-Up	1	

PART #	MASTER L/STEEL KIT	QTY.	REFERENCE #
10004AP	Use 10006AP (Frictions & Steels Are 1 Sided) There Is No Less Steels Kit	1	

PART #	MASTER W/STEEL KIT	QTY.	REFERENCE #
10006A	Master W/Steels Kit, Saturn (For Bonded Pistons Sell A10962AK) 1991-Up	1	

PART #	FILTER	QTY.	REFERENCE #
10010A	Filter, Saturn Sump (Internal) 1991-Up	1	21002346
10013A	Filter, Saturn (Spin-On) External 1991-Up	1	21002303

PART #	MISC. FILTERS	QTY.	REFERENCE #
10015	Filter, Saturn TAAT Solenoid (Large) 1991-04	1	

PART #	BUSHINGS	QTY.	REFERENCE #
10030A	Bushing Kit, Saturn 1991-Up	1	
10047A	Bushing, Saturn Mainshaft (Rear) (Also Fits Countershaft (Rear) # 052) 1991-Up	1-2	
10052A	Use 10047A	1	

PART #	METAL CLAD SEALS	QTY.	REFERENCE #
10070A	Seal, Saturn Front 1991-Up3	1	21001660
10072A	Seal, Saturn Linkage Shaft	1	21001532
10074A	Seal, Saturn Rear CoverTo Pinion Shaft Pilot (Black Plastic)	1	21001662
10076AA	Seal, Saturn Left Axle (Case Side)(3.120"OD On Flange)	1	21002283
10077A	Seal, Saturn Right Axle (Bell Housing Side)(2.415"OD On Flange)	1	

PART #	FRICTION CLUTCH	QTY.	REFERENCE #
10100A	Friction, Saturn (All Drums) .061" (With 1 Sided Friction) Internal Splines (Use With 10120A & 10141A)	15	21002870

PART #	STEEL CLUTCH	QTY.	REFERENCE #
10120A	Steel, Saturn (All Drums) .061" (With 1 Sided Friction) External Splines (Use With 10100A & 10141A)	11	21002871

PART #	CLUTCH PRESSURE PLATES	QTY.	REFERENCE #
10140A	Pressure Plate, Saturn (All Drums) Top	4	21001597
10141A	Apply Plate, Saturn (All Drums) .130" (With 1 Sided Friction) External Splines (Use With 10100A & 10120A)	4	21002567

PART #	OIL SEALING RINGS	QTY.	REFERENCE #
10175A	Ring Kit, Saturn 1991-Up	1	
10195AT	Ring, Saturn Servo Piston (Teflon) 1991-04	1	21002298

PART #	WASHERS & BEARINGS	QTY.	REFERENCE #
10208A	Washer, Saturn Under Counter Shaft Nut	1	
10211A	Bearing, Saturn Converter Nut To Bell Housing	1	
10214A	Roller Bearing, Saturn Converter Reactor To Mainshaft	1	
10217A	Thrust Bearing, Saturn Mainshaft To 3rd Gear	1	
10220A	Roller Bearing, Saturn 3rd Gear To Mainshaft	1	
10223A	Thrust Bearing, Saturn 3rd Gear To 2nd/3rd Drum	1	
10226A	Race, Saturn 3rd Gear To 2nd/3rd Drum	1	
10229A	Race, Saturn 2nd/3rd Drum To 2nd/Reverse Gear	1	

© Whatever It Takes Transmission Parts. Inc.

10232A	Thrust Bearing, Saturn 2nd/3rd Drum To 2nd/Reverse Gear	1	
10234A	Collar, Saturn Mainshaft To 2nd/Reverse Gear	1	
10236A	Roller Bearing, Saturn 2nd/Reverse Gear To Collar	1	
10238A	Thrust Bearing, Saturn 2nd/Reverse Gear To Ball Bearing	1	
10238AA	Thrust Bearing With Race, Saturn 2nd/Reverse Gear To Ball Bearing	1	
10241A	Ball Bearing, Saturn Mainshaft To Case	1	
10243A	Thrust Washer, Saturn Ball Bearing To 1st Gear (Mainshaft)	1	
10247A	Roller Bearing, Saturn 1st Gear To Mainshaft	1	
10248A	Collar, Saturn 1st Gear To Mainshaft	1	
10251A	Thrust Bearing, Saturn 1st Gear To 1st Clutch Drum (Mainshaft)	1	
10252A	Race, Saturn 1st Gear To 1st Clucth Drum (Mainshaft)	1	
10254A	Roller Bearing, Saturn Bell Housing To Countershaft	1	
10256A	Race, Saturn 4th Clutch Drum To 4th Gear (Countershaft)	1	
10257A	Thrust Bearing, Saturn 4th Clutch Drum To 4th Gear (Countershaft) And 4th Gear To 3rd Gear (Countershaft)	1	
10260A	Roller Bearing, Saturn 4th Gear To Countershaft	1	
10267A	Collar, Saturn 3rd Gear To 2nd Gear (Countershaft)	1	
10268A	Roller Bearing, Saturn 2nd Gear To Countershaft (1.575”OD)	1	
10268B	Roller Bearing, Saturn 2nd Gear To Countershaft (1.810”OD)	1	
10269A	Race, Saturn Collar To 2nd Gear (Countershaft)	1	
10270A	Collar, Saturn 2nd Gear To Countershaft	1	
10271A	Roller Bearing, Saturn Reverse Gear To Countershaft	1	
10272A	Collar, Saturn Reverse Gear To Countershaft	1	
10273A	Race, Saturn Reverse Gear To Ball Bearing (Countershaft)	1	
10274A	Ball Bearing, Saturn Countershaft To Case	1	
10281A	Retainer, Saturn Holds Sprag In	1	
10283A	Roller Bearing, Saturn Reverse Idler Gear To Shaft	1	
10285A	Roller Bearing, Saturn 1st Gear To Inner Sprag Race (Countershaft)	1	
10289A	Ball Bearing, Saturn Differential (Both Sides)	1	

PART #	GASKETS	QTY.	REFERENCE #
10302A	Gasket, Saturn Top Pan 1991-96	1	21001683
10302BW	Gasket, Saturn Top Pan (Molded Rubber) 1997-02	1	
10304A	Gasket, Saturn Rear Cover To Case 1991-Up	1	21001684
10318A	Gasket, Saturn Bell Housing To Case 1991-Up	1	21003108
10320A	Gasket, Saturn Valve Body Spacer Plate (Upper & Lower) (Takes 2) 1993-96	2	
10320B	Gasket, Saturn Valve Body Spacer Plate (Upper & Lower) (Takes 2) 1997-04	2	
10374A	O-Ring, Saturn Idler Gear Shaft (Takes 2) 1991-04	2	

PART #	TECHNICAL MANUALS	QTY.	REFERENCE #
10400A	Technical Manual, Saturn (TAAT) 1991-Up	1	Saturn TAAT

PART #	ELECTRICAL COMPONENTS	QTY.	REFERENCE #
10410A	Neutral Switch, Saturn	1	21020129
10410AB	Neutral Switch, Saturn (SL2) 1995	1	
10421A	Actuator, Saturn Shift (Solenoid) Blue Top 1991-92	5	21002248
10421AA	Actuator, Saturn Shift (Solenoid) Red Top 1993-96	5	21002509
10421AB	Actuator, Saturn Shift (Solenoid) Red Top 1997-Up	5	
10421AC	Actuator, Saturn Shift (Solenoid) White Top 1997-02	5	
10436A	Sensor, Saturn Output Speed (VSS) & Input Speed	1	
10437A	Sensor, Saturn Oil Temperature (2 Prong)	1	
10438A	Use 10436A	1	
10444A	Connector, Saturn Actuator 1991-Up	1	2100828
10446A	Repair Kit, Saturn Wire Harness (External)(Rostra) 1995-Up	1	

PART #	MISC. COMPONENTS	QTY.	REFERENCE #
10494A	Filler Tube, Saturn	1	

PART #	HARD PARTS	QTY.	REFERENCE #
10500A	Pump Assembly, Saturn	1	

© Whatever It Takes Transmission Parts. Inc.

PART #	PUMP COMPONENTS	QTY.	REFERENCE #
10507A-4K	Retainer/Clip Kit, Saturn Lube Relief Valve (Has 3 Retainers & 3 Clips) Fixes 3 Transmissions	1	
10529A	Converter Reactor, Saturn (Stator Tube) 18 Splines	1	21003132
10529B	Converter Reactor, Saturn (Stator Tube) 29 Splines (4 1/2" Long)	1	
10530A	Pump Gears, Saturn	1	
10544A	Plate, Saturn Pump To Bell Housing	1	

PART #	HARD PARTS (Continued)	QTY.	REFERENCE #
10550A	Drum, Saturn 4th Clutch	1	21003100
10552A	Drum, Saturn 2nd & 3rd Clutch	1	21001946
10554A	Drum, Saturn 1st Clutch	1	21001943
10562A	Piston Kit, Saturn For 2nd, 3rd & 4th Clutch Drums	3	
10564A	Piston Kit, Saturn 1st Clutch Drum	1	

PART #	SPRAGS & ONE WAY CLUTCHES	QTY.	REFERENCE #
10652A	Sprag, Saturn Input	1	21001594
10662A	Inner Race, Saturn Sprag	1	

PART #	HARD PARTS (Continued)	QTY.	REFERENCE #
10672A	Mainshaft, Saturn (40 Teeth) (.460" Thick Gear)	1	21001729
10672AA	Mainshaft, Saturn (40 Teeth) (.490" Thick Gear)	1	21002104
10672B	Mainshaft, Saturn (42 Teeth) (.450" Thick Gear)	1	21002188
10672BA	Mainshaft, Saturn (42 Teeth) (.490" Thick Gear) No Groove Under # 234 Race	1	
10672BB	Mainshaft, Saturn (42 Teeth) (.490" Thick Gear) 2 Grooves Under #234 Race	1	
10676A	Countershaft , Saturn Output Shaft (15 Teeth)	1	
10676B	Countershaft, Saturn Output Shaft (16 Teeth)	1	
10676C	Countershaft, Saturn Output Shaft (17 Teeth)	1	
10676D	Countershaft, Saturn Output Shaft (18 Teeth)	1	
10715A	Differential Assembly, Saturn With 62 Teeth Ring Gear 1991-94	1	21002752
10715B	Differential Assembly, Saturn With 65 Teeth Ring Gear 1995-Up	1	
10740A	Valve Body, Saturn 1st Design (With TCC Enable Valve In Lower Valve Body Section) 1991-92 Has A Flat Area On Manual Valve	1	21002273
10740AA	Valve Body, Saturn 2nd Design (No TCC Enable Valve In Lower Valve Body Section) 1992-93 No Plastic End On Manual Shaft	1	
10740B	Valve Body, Saturn 3rd Design 1994-Up (With Plastic End On Manual Valve) 1992-02 (Complete Valve Body, Fully Tested, Ready To Install) Has Sonnax Part # S10741P-1AK And S10741P-2K Installed	1	21005971

PART #	VALVE BODY COMPONENTS	QTY.	REFERENCE #
A10741C-9	O-Ring, Saturn (TAAT) TCC Shift Valve Plunger (Small) 1991-04	1	
S10741CCK	Valve Kit, Saturn (TAAT) TCC Limit Or Charge Control (Contains: 1 Oversized Valve & 2 Springs) (Sonnax)(Must Use T-F-95200-TL8)	1	
T-F-95200-TL8	Reamer For S10741CCK	1	
S10741PK	Sure Cure Kit, Saturn (TAAT) (Sonnax) (Use Tool # T-95200-TL)	1	
S10741P-1	Valve, Saturn Pressure Regulator	1	
S10741P-1AK	Valve & Sleeve Assembly, Saturn Pressure Regulator Boost (Type 2 Valve Body) 2 O-Ring Type (Sonnax)	1	
S10741P-2K	Sleeve Assembly, Saturn Pressure Regulator (Sleeve & Retainer) Use With T-95200-TL Reamer (Sonnax)	1	
T-95200-TL	Reamer Assembly, Saturn (Use With S10741P-2K) (Sonnax)	1	
S10741P-3	Spring, Saturn Line Pressure Regulator (Sonnax)	1	

PART #	HARD PARTS (Continued)	QTY.	REFERENCE #
10750A	Bell Housing, Saturn (With Raised Mountiong Boss At 3:00) No Threaded Mounting Bosses Around Differential Seal	1	21001711
10750AA	Bell Housing, Saturn (With Raised Mounting Boss At 3:00) With 3 Threaded Mounting Bosses Around Differential Seal (Cast # 21002323)	1	
10750AB	Bell Housing, Saturn (With Raised Mounting Boss At 3:00) With 3 Threaded Mounting Bosses Around Differential Seal (No Cast #)	1	
10750AC	Bell Housing, Saturn (With Unthreaded Raised Boss At 3:00) No Mounting Holes Around Differential Seal (Cast # 2100323)	1	
10750AD	Bell Housing, Saturn (With Unthreaded Raised Boss At 3:00) No Mounting Holes Around Differential Seal (Cast # 21002656)	1	

© Whatever It Takes Transmission Parts. Inc.

10750B	Bell Housing, Saturn (No Raised Mounting Boss At 3:00) No Threaded Mounting Bosses Around Differential Seal (Cast # 21002550)	1	21003222
10750BA	Bell Housing, Saturn (No Raised Mounting Boss At 3:00) No Threaded Mounting Bosses Around Differential Seal (Cast # 21003342)	1	
10759A	Cover, Saturn Rear (With Tubes)(Mainshaft Tube Bolts To The Inside Of Cover)	1	21002421
10759B	Cover, Saturn Rear (With Tubes)(Mainshaft Tube Bolts To The Outside Of Cover)	1	
10760A	Case, Saturn (All 1991) (1992 With VIN # NZ200101 Thru NZ205624)	1	21002449
10760AA	Case, Saturn (1992 With VIN # To NZ200100 & 1993-96 With VIN # NZ205625 & Up)	1	21002622
10767A	Pan, Saturn Top (13 Bolt) 1991-96	1	21001584
10767B	Pan, Saturn Top (8 Bolt) 1997-02	1	
10795A	Nut, Saturn Mainshaft	1	21001680
10796A	Nut, Saturn Countershaft	1	21001679
10800A	Gear, Saturn 1st Drive (19 Teeth)	1	21002072
10800B	Gear, Saturn 1st Drive (21 Teeth)	1	21001640
10801A	Gear, Saturn 1st Driven (47 Teeth)	1	21001549
10801B	Gear, Saturn 1st Druiven (48 Teeth) 1 Groove	1	21002065
10801BA	Gear, Saturn 1st Driven (48 Teeth) No Groove	1	
10803A	Gear, Saturn 2nd/Reverse Drive (30 Teeth)	1	21002073
10803B	Gear, Saturn 2nd/Reverse Drive (27 Teeth)	1	21001641
10804A	Gear, Saturn 2nd Driven (38 Teeth) (1.575"ID)	1	21002067
10804AA	Gear, Saturn 2nd Driven (38 Teeth) (1.810"ID)	1	
10804B	Gear, Saturn 2nd Driven (42 Teeth) (1.575"ID)	1	21001553
10804BA	Gear, Saturn 2nd Driven (42 Teeth) (1.810"ID)	1	
10806A	Gear, Saturn 3rd Drive (37 Teeth)	1	21001599
10806B	Gear, Saturn 3rd Drive (33 Teeth)	1	21001643
10807A	Gear, Saturn 3rd Driven (30 Teeth)	1	21001555
10807B	Gear, Saturn 3rd Driven (34 Teeth)	1	21001591
10810A	Gear, Saturn 4th Driven (28 Teeth) Fits Mainshaft #10672A With A 40 Teeth .460" Thick Gear	1	21001600
10810AA	Gear, Saturn 4th Driven (28 Teeth) Fits Mainshaft #10672AA With A 40 Teeth .490" Thick Gear	1	
10810B	Gear, Saturn 4th Driven (25 Teeth) Fits Mainshaft #10672B & # 10672BA With A 42 Teeth Gear	1	21001642
10810BA	Gear, Saturn 4th Driven (25 Teeth) Fits Mainshaft #10672BB With A 42 Teeth Gear	1	

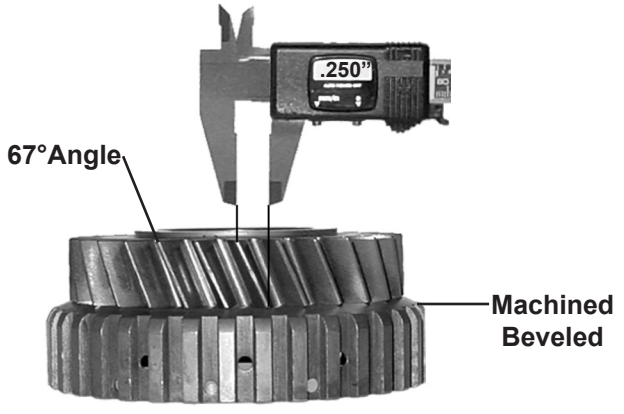

10810A

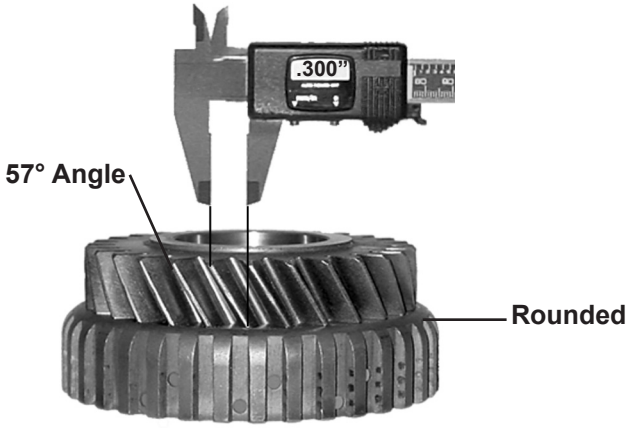

10810AA

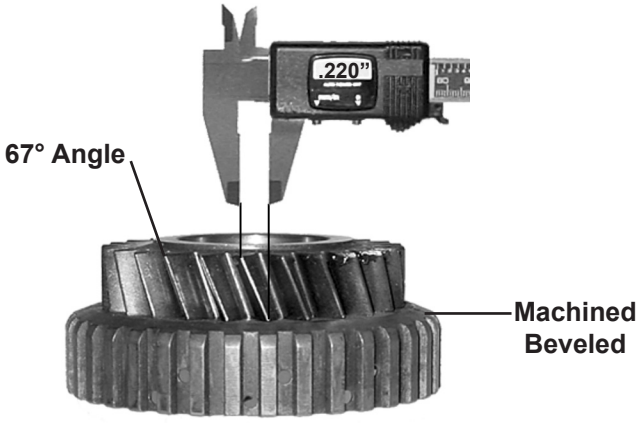

10810B

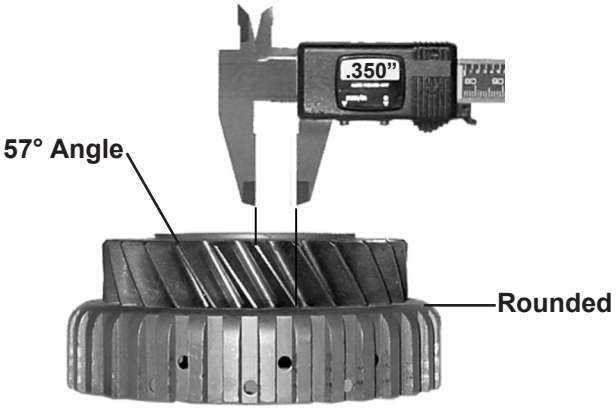

10810BA

© Whatever It Takes Transmission Parts. Inc.

PART #	HARD PARTS (Continued)	QTY.	REFERENCE #
10816A	Gear, Saturn Reverse Driven (40 Teeth) (.450” Thick Teeth)	1	21001579
10816AA	Gear, Saturn Reverse Driven (40 Teeth) (.510” Thick Teeth)	1	
10818A	Gear, Saturn Reverse Idler (27 Teeth)	1	21002429
10819A	Pin, Saturn Inside Reverse Idler Gear	1	21002756
10820A	Bracket, Saturn Reverse Idler Gear	1	
10830A	Selector, Saturn 2nd & Reverse	1	21001784
10835A	Hub, Saturn 2nd & Reverse Selector	1	21001568
10840A	Fork, Saturn 2nd & Reverse Shifting 1991-92	1	21005969
10840AA	Fork, Saturn 2nd & Reverse Shifting 1993-96	1	21002617
10861A	Snap Ring, Saturn Holds Pressure Plate In Drum	4	21002290
10862A	Snap Ring, Saturn Holds Retainer In 2nd, 3rd & 4th Clutch Drum	3	21001626
10877A	Snap Ring, Saturn Holds Retainer In 1st Clutch Drum	1	21002178
10878A	Snap Ring, Saturn Holds Front Seal To Bell Housing	1	21002143
10879A	Snap Ring, Saturn Holds Bearing (Under Front Seal) To Bell Housing	1	21002275
10880A	Snap Ring, Saturn Holds Bearing In Converter Reactor	1	
10881A	Snap Ring, Saturn Holds Ball Bearing (On Mainshaft) To Case	1	
10887A	Retainer, Saturn Horse Shoe Clips	1	21002173
10888A	Snap Ring, Saturn Holds Ball Bearing (On Countershaft) To Case	1	
10890A	Snap Ring, Saturn Holds 4th Clutch Feed Pipe To Rear Cover (Large Outer)	1	
10891A	Snap Ring, Saturn Holds 4th Clutch Feed Pipe To Rear Cover (Small Inner)	1	
10898AA	Snap Ring, Saturn Under Seal (Case Side) (.051” Thick)	1	21002329
10898AB	Snap Ring, Saturn Under Seal (Case Side) (.055” Thick)	1	21002324
10898AC	Snap Ring, Saturn Under Seal (Case Side) (.059” Thick)	1	21002325
10898AD	Snap Ring, Saturn Under Seal (Case Side) (.063” Thick)	1	21002326
10898AE	Snap Ring, Saturn Under Seal (Case Side) (.067” Thick)	1	21002327
10898AF	Snap Ring, Saturn Under Seal (Case Side) (.071” Thick)	1	21002328
10898AG	Snap Ring, Saturn Under Seal (Case Side) (.075” Thick)	1	21002330
10898AH	Snap Ring, Saturn Under Seal (Case Side) (.079” Thick)	1	21002331
10899A	Snap Ring, Saturn Holds Axle Seal In Case	1	21002436
10911A	Spring, Saturn Servo (2.050” Long) 1991-92 (Up To VIN# NZ205624)	1	21002553
10911AA	Spring, Saturn Servo (2.450” Long) 1992-96 (With VIN # NZ205625 & Up)	1	21002626
10912A	Piston, Saturn Servo (1st Design) 1991-92 (Up To VIN# NZ205624)	1	21002552
10912AA	Piston, Saturn Servo (2nd Design) 1992-96 (With VIN# NZ205625 & Up)	1	21002547
10914A	Cover, Saturn Servo	1	
10962A	Piston, Saturn For 2nd, 3rd & 4th Clutch Drums	3	21001582
10962AK	Piston Set, Saturn (Bonded) 19991-Up (Contains: Three #962 & One #964)	1	
10964A	Piston, Saturn 1st Clutch Drum	1	21001581
10972A	Retainer W/Spring, Saturn 2nd, 3rd & 4th Clutch Drums	3	21001616
10974A	Retainer W/Spring, Saturn 1st Clutch Drum	1	21002178
10991A	Linkage Assembly, Saturn Internal	1	
10991-7A	Linkage, Saturn Rooster Comb To Park Pawl Assembly (8 3/8” Long)	1	
10992A	Shift Lever, Saturn External	1	
10995A	Park Pawl Assembly, Saturn	1	21002371
10999A	Use 10759A or 10759B	1	

© Whatever It Takes Transmission Parts. Inc.

Saturn TAAT

Delay in 'D' and/or Bind in Reverse

Complaint:

Before or after overhaul, Saturn vehicles equipped with the MP6 or MP7 transaxle may exhibit a slight engagement delay in "D" and/or a binding condition in reverse.

Cause:

The cause may be shrunken or damaged 1st-clutch sealing rings, as shown in Figure 6. When these rings leak they can cause a slow fill of the 1st clutch, which results in a delayed engagement in "D." The first sealing ring also separates the 2nd clutch from the 1st clutch. When this ring leaks while in the Reverse range, the 1st clutch can now be applied with 2nd-clutch pressure, which results in a bind-up. See Figure 7 for a cross-sectional view of the mainshaft.

Correction:

Replace the 1st-clutch sealing rings as part of every overhaul. TD

Figure 6 Location of 1st-Clutch Sealing Rings

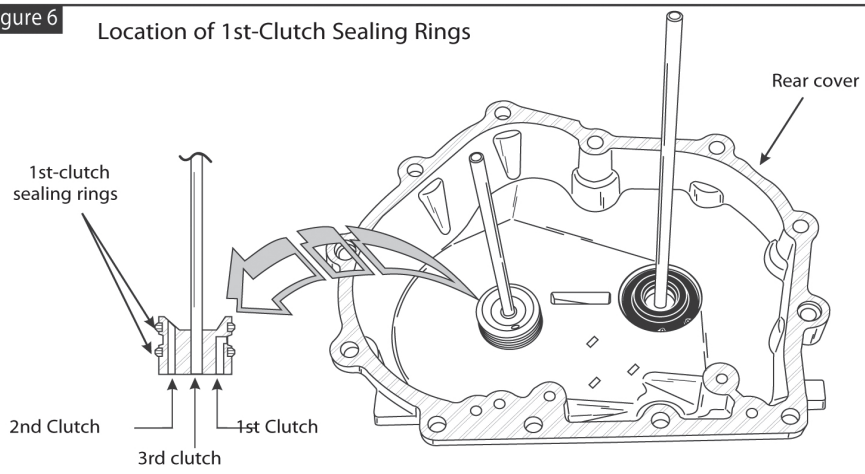

Figure 7 Cross-Sectional View of Mainshaft

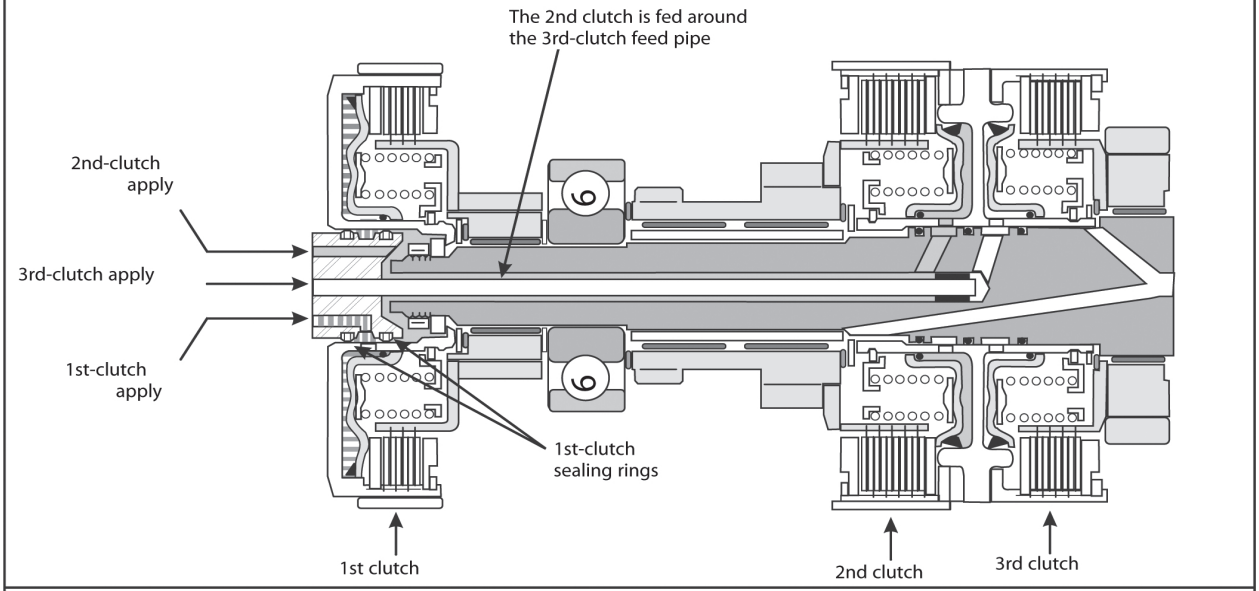

Summary: When the 2nd clutch is applied in Reverse, shrunken 1st-clutch sealing rings may allow the 1st clutch to be applied at the same time, causing a bind-up.

To subscribe to Transmission Tech/Talk, call toll-free 800-274-7890.

©2006 Transmission Digest

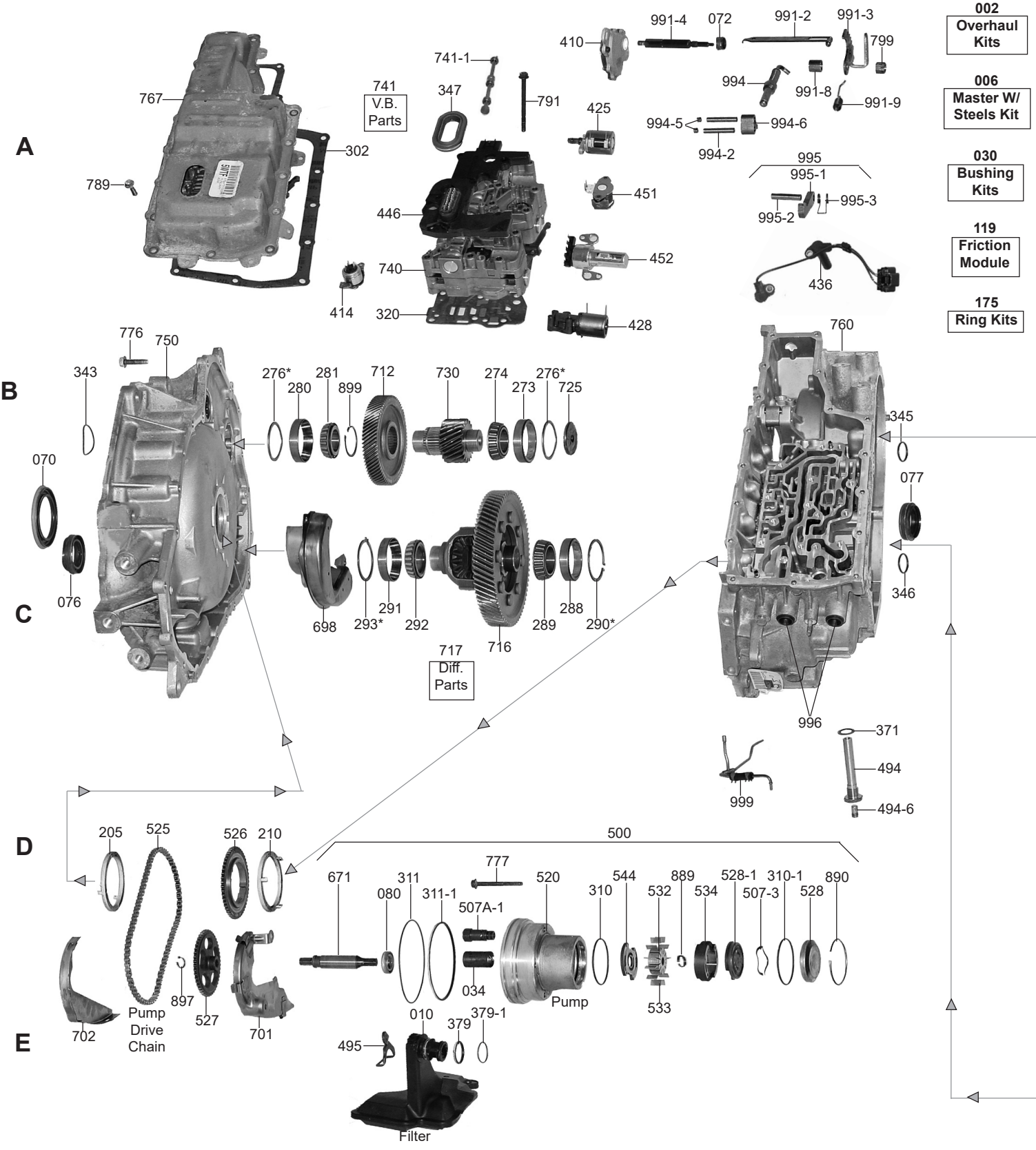

002
Overhaul Kits

006
Master W/ Steels Kit

030
Bushing Kits

119
Friction Module

175
Ring Kits

© Whatever It Takes Transmission Parts. Inc.

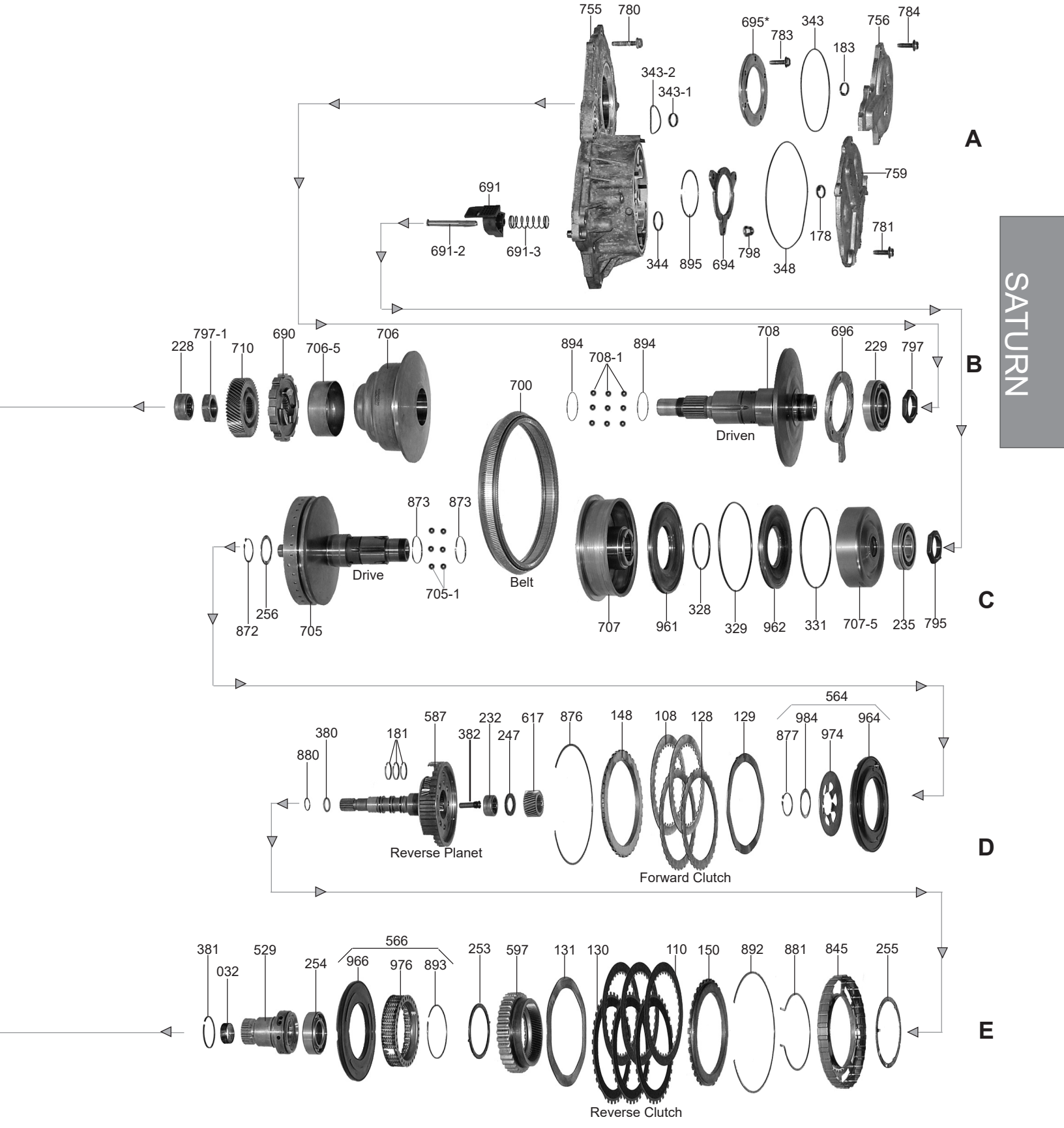

SATURN

1-800-940-0197

© Whatever It Takes Transmission Parts. Inc.

PART #	OVERHAUL KITS	QTY	REFERENCE #
205002AP	Overhaul Kit, VT25-E (CVT) (With Bonded Pistons) 2002-Up	1	

PART #	MASTER W/STEELS KITS	QTY	REFERENCE #
205006A	Master W/Steels Kit, VT25-E(CVT)(With 1 Sided Friction/Steels)(With Bonded Pistons) 02-Up	1	

PART #	FILTERS	QTY	REFERENCE #
205010A	Filter, VT25-E (Saturn) 2002-06 (Filtertek)	1	

PART #	BUSHINGS	QTY	REFERENCE #
205030A	Bushing Kit, VT25-E 2002-Up	1	
205032A	Bushing, VT25-E Converter Reactor (Front) (1.110"OD, .985"ID) 2002-Up	1	
205034A	Bushing, VT25-E Pump Housing (1.485"Long, .750"ID) 2002-Up	1	

SATURN

PART #	METAL CLAD SEALS	QTY	REFERENCE #
205070A	Seal, VT25-E Front (3.353"OD, 2.265"ID) 2002-Up	1	
205072A	Seal, VT25-E Manual Shaft (.355"Thick, .755"OD) 2002-Up	1	
205076A	Seal, VT25-E Axle (Bell Housing Side) (2.132"OD, 1.340"ID) 2002-Up (Also Fits VT25-E Axle (Case Side) # 077 2002-Up)	1-2	
205077A	Use 205076A	1	
205080A	Seal, VT25-E Pump Shaft (1.312"OD, .715"ID) 2002-Up	1	

PART #	FRICTIONS	QTY	REFERENCE #
205108A	Friction, VT25-E Forward Clutch (.060")(36 Internal Teeth)(6 1/8"OD)(1 Sided Friction) 2002-Up	2	
205110A	Friction, VT25-E Reverse Clutch (.060") (36 Internal Teeth) (6 1/8"OD) (1 Sided Friction) 2002-Up	3	
205119A	Friction Module, VT25-E (1 Sided Frictions) 2002-06 (Alto)	1	

PART #	STEELS	QTY	REFERENCE #
205128A	Friction, VT25-E Forward Clutch (.059")(36 External Teeth)(5.050"ID)(1 Sided Friction) 2002-Up	2	
205129A	Steel, VT25-E Forward Clutch (.053") (3 Teeth) (5.060"ID) (Waved) 2002-Up	1	
205130A	Friction, VT25-E Reverse Clutch (.061")(External Teeth)(5.058"ID)(1 Sided Friction) 2002-Up	3	
205131A	Steel, VT25-E Reverse Clutch (.055") (No Teeth) (6 1/2"OD, 5 1/8"ID) (Waved) 2002-Up	1	

PART #	PRESSURE PLATES	QTY	REFERENCE #
205148A	Pressure Plate, VT25-E Forward Clutch (.100") (36 Teeth) (5.020"ID) (Stepped) (Stamped Letter B) 2002-Up	1	
205148AA	Pressure Plate, VT25-E Forward Clutch (.110) (36 Teeth) (5.020"ID) (Stepped) (Stamped Letter C) 2002-Up	1	
205148AB	Pressure Plate, VT25-E Forward Clutch (.120") (36 Teeth) (5.020"ID) (Stepped) (Stamped Letter D) 2002-Up	1	
205148AC	Pressure Plate, VT25-E Forward Clutch (.130") (36 Teeth) (5.020"ID) (Stepped) (Stamped Letter E) 2002-Up	1	
205148AD	Pressure Plate, VT25-E Forward Clutch (.140") (36 Teeth) (5.020"ID) (Stepped) (Stamped Letter F) 2002-Up	1	
205150A	Pressure Plate, VT25-E Reverse Clutch (.118") (31 Teeth) (Stepped) (5.015"ID) (Stamped Letter H) 2002-Up	1	

PART #	SEALING RINGS	QTY	REFERENCE #
205175A	Ring Kit, VT25-E (CVT) (Teflon) 2002-Up	1	
205178AT	Ring, VT25-E Drive Pulley Shaft To Drive Pulley Cover (.076"Thick, .840"OD) (Teflon) 2002-Up (Also Fits VT25-E Driven Pulley Shaft To Driven Pulley Cover)	1-2	
205181AT	Ring, VT25-E Input Shaft (Large Ones) (1.070"OD) (Solid, Teflon) 2002-Up	3	
205183AT	Use 205178AT	1	

PART #	WASHERS & BEARINGS	QTY	REFERENCE #
205205A	Washer, VT25-E Bell Housing To Drive Pump Sprocket (.198"Thick, 3.360"OD, 2.830"ID) 2002-Up (Also Fits Drive Pump Sprocket To Case # 210 2002-Up)	1-2	
205210A	Use U205205A	1	

© Whatever It Takes Transmission Parts. Inc.

205228A.....Caged Needle Bearing, VT25-E Bell Housing To Driven Pulley Shaft (.775”Thick, 1.690”OD) .....(12 Needles) (Cast # FC69847 INA) 2002-Up .....1 .....
205229A.....Ball Bearing, VT25-E Driven Pulley Shaft To Case Cover (.707”Thick, 3.150”OD, 1.575”ID) .....(Cast # BAQ-3929A/HN3 SKF) (Stepped On OD) 2002-Up .....1 .....
205232A.....Caged Needle Bearing, VT25-E Reverse Planet To Drive Pulley # 705 (.790”OD) (14 Needles) .....(Cast # F-234550 INA) 2002-Up .....1 .....
205235A.....Ball Bearing, VT25-E Drive Pulley (Rear) (.590”Thick, 2.835”OD, 1.375”ID) (9 Balls) .....(Cast # 803901 FAG) 2002-Up .....1 .....
205247A.....Washer, VT25-E Reverse Planet To Sun Gear (.078”Thick, 1.380”OD, .794”ID) (Plastic) .....2002-Up .....1 .....
205253A.....Washer, VT25-E Case To Reverse Clutch Hub (.112”Thick, 3.352”OD, 2.800”ID) (Plastic) .....(2 Outer Tabs) 2002-Up .....1 .....
205254A.....Ball Bearing, VT25-E Case To Input Shaft (.630”Thick, 2.520”OD, 1.338”ID) 2002-Up .....1 .....
205255A.....Washer, VT25-E Reverse Planet Ring Gear To Reverse Planet (.065”Thick, 4.325”OD, 3.720”ID) .....(W/3 ID Tabs) 2002-Up .....1 .....
205256A.....Use U205984A .....1 .....
205273A.....Cup Race, VT25-E Pinion To Case (2.330”OD, 1.905”ID) (Cast # NP 735478 Timken) 2002-Up .....(Also Fits VT25-E Pinion To Bell Hsg # 280 2002-Up).....1-2.....
205274A.....Cone Bearing, VT25-E Pinion To Case (1.250”ID) (19 Rollers) (Cast # NP 785304 Timken) .....2002-Up (Also Fits VT25-E Pinion To Bell Hsg # 281 2002-Up).....1-2.....
205276A.....Shim, VT25-E Pinion To Case (Selective) (2.345”OD, 1.960”ID) 2002-Up (Also Fits Pinion To .....Bell Housing) .....1 .....
205280A.....Use U205273A .....1 .....
205281A.....Use U205274A .....1 .....
205288A.....Cup Race, VT25-E Differential Bearing To Case (.528”Thick, 2.480”OD, 2.058”ID) .....(Cast # NP350068 Timken) 2002-Up (Also Fits VT25-E Differential To Bell Housing # 291 .....2002-Up).....1-2.....
205289A.....Cone Bearing, VT25-E Differential To Case (1.495”ID) (22 Rollers) (Cast # NP423815) 2002-Up .....(Also Fits VT25-E Differential To Bell Housing # 292) .....1-2.....
205290A.....Shim, VT25-E Differential Cup Race To Case (Selective) (2.440”OD, 2.098”ID) (2 Ears W/Open .....End) 2002-Up (Also Fits VT25-E Differential To Bell Housing # 293 2002-Up).....1-2.....
205291A.....Use 205288A.....1 .....
205292A.....Use U205289A .....1 .....
205293A.....Use U205290A .....1 .....

PART #	GASKETS & RUBBER COMPONENTS	QTY	REFERENCE #

205302A.....Gasket, VT25-E Top Pan (17 Holes) (7”Wide, 17 3/4”Long) 2002-Up .....1 .....
205320A.....Plate, VT25-E Valve Body (Bonded) (Cast # 585) 2002-Up .....1 .....
205347A.....Boot, VT25-E Case Connector To Top Pan (.473”Thick, 1 5/8”Wide, 2 7/8”Long) (Oval) (Orange) .....2002-Up .....1 .....

PART #	TECHNICAL MANUALS	QTY	REFERENCE #

205400A.....Technical Manual, VT20/VT25E (ATRA).....1 .....
205401A.....Technical Manual On CD, VT25E (Saturn)(ATSG).....1 .....

PART #	ELECTRICAL COMPONENTS	QTY	REFERENCE #

205410A.....Neutral Safety Switch, VT25-E (10 Blade Connector) 2002-Up .....1 .....
205414A.....Sensor, VT25-E Tier 2 Feed Fluid Pressure (3 Blade)(Cast # PPO-PA-GF30) 2002-Up.....1 .....
205425A.....Solenoid, VT25-E Neutral Idle/TCC Control (2 Blade)(1 Bolt)(Cast # D26E025i) 2002-Up.....1 .....
205428A.....Solenoid, VT25-E Line Pressure Control (2 Blade)(3 Bolt)(Cast # D23N0228) 2002-Up .....1 .....
205436A.....Sensor, VT25-E Input & Output Speed (2 Sensors) (7 Prong Connector) 2002-Up .....1 .....
205446A.....Circuit Board, VT25-E (20 Blade Case Connector & 4 Blade Internal Connector) .....(Cast# 953981-1 Borg Warner) 2002-Up .....1 .....
205451A.....Solenoid, VT25-E Neutral Idle/TCC On/Off (2 Blade)(2 Bolt)(With Open Windings) 2002-Up .....1 .....
205452A.....Ratio Control Motor, VT25-E (5 Blade)(2 Bolt)(Cast # 1083L) 2002-Up .....1 .....
205495A.....Bracket, VT25-E Filter (1 Bolt) 2002-Up .....1 .....

PART #	HARDPARTS	QTY	REFERENCE #

205500A.....Pump Assy, VT25-E (12 Vane) 2002-Up .....1 .....
205525A.....Chain, VT25-E Pump Drive (49 Links, .265”Wide) 2002-Up .....1 .....
205526A.....Sprocket, VT25-E Pump Drive (53 Teeth)(.470”Thick, 4.140”OD, 2.320”ID) (2 ID Notches) .....2002-Up .....1 .....
205527A.....Sprocket, VT25-E Pump Driven (48 Teeth) (3.740”OD) (14 Inner Splines) 2002-Up .....1 .....
205529A.....Converter Reactor, VT25-E (3.020” Long, 2.600”OD, 1.795”ID) (31 Splines) 2002-Up .....1 .....
205564A.....Piston Kit, VT25-E Forward Clutch (Bonded) 2002-Up .....1 .....
205566A.....Piston Kit, VT25-E Reverse Clutch (Bonded) 2002-Up .....1 .....

© Whatever It Takes Transmission Parts. Inc.

205587A ..... Planet W/Shaft, VT25-E Reverse (6 Gear) (6 9/16"Tall) (Uses 32 Teeth Sun Gear # 617) ..... 2002-Up ..... 1 .....
205597A ..... Ring W/Hub, VT25-E Reverse Planet W/Forward Clutch Hub (71 Teeth) (36 Outer Clutch ..... Splines) (1.340"Thick) 2002-Up ..... 1 .....
205617A ..... Sun Gear, VT25-E Reverse Planet (32 Teeth) (.755"Thick, 1.606"OD) 2002-Up ..... 1 .....
205671A ..... Shaft, VT25-E Pump Drive (4 11/16"Long, .750"OD) 2002-Up ..... 1 .....
205690A ..... Park Gear, VT25-E (12 Lugs) (27 Splines) (.785"Thick, 4.065"OD) 2002-Up ..... 1 .....

PART #	HARDPARTS	QTY	REFERENCE #

205691A ..... Variable Drive Pulley Follower, VT25-E (2.290"Long) (Black Plastic) 2002-Up ..... 1 .....
205691A-2 ..... Variable Drive Pulley Follower Pin, VT25-E (3.095"Long, .310"OD) 2002-Up ..... 1 .....
205691A-3 ..... Variable Drive Pulley Follower Spring, VT25-E (2.235"Long, .780"OD) 2002-Up ..... 1 .....
205694A ..... Retainer, VT25-E Holds Bearing # 235 To Case Cover (3 Bolt Steel) (2.405"ID) 2002-Up ..... 1 .....
205695A ..... Retainer, VT25-E Holds Bearing # 229 To Case Cover (Selective) (6 Holes) (4.410"OD, 2.794"ID) ..... 2002-Up ..... 1 .....
205696A ..... Retainer, VT25-E (Ball Bearing # 229) (.236"Thick, 4.415"OD, 3.050"ID) (1 Long Outer Tab) ..... (8 Holes) 2002-Up ..... 1 .....
205697A ..... Oil Tube, VT25-E Inside Rear Of Reverse Planet (Bonded) (.390"OD) 2002-Up ..... 1 .....
205698A ..... Oil Baffle, VT25-E Differential (3 Bolts To Bell) (Stamped 1573) 2002-Up ..... 1 .....
205700A ..... Belt, VT20/VT25-E Drive 2002-Up (Use U205707AK) ..... 1 .....
205701A ..... Chain Guard, VT25-E (Rear) (3 Clips, 3 Bolt Holes) (Tin) (Stamped 2704 0424) 2002-Up ..... 1 .....
205702A ..... Chain Guard, VT25-E (Front) (3 Slots, 1 Hole) (Tin) (Stamped 2705 0417) 2002-Up ..... 1 .....
205705A ..... Drive Pulley, VT25-E (Front Half) (8"Long, 6 3/4"OD) (.790"OD Front Pilot) (1.380"OD Threads) ..... 2002-Up (Use U205707AK) ..... 1 .....
205705-1A ..... Steel Ball, VT25-E Pulley Guides (.236"OD)(Drive Pulley Takes 9 Balls)(Driven Pulley Takes ..... 6 Balls) 2002-Up ..... 6-15 .....
205706A ..... Driven Pulley, VT25-E (Front Half) (3.965"Tall, 6 3/4"OD, 2.235"ID) 2002-Up (Use U205707AK) . 1 .....
205706A-5 ..... Cover, VT25-E Driven Pulley (Front Half) (Tin) (1.165"Thick, 3.240"OD) (3 ID Notches) ..... 2002-Up ..... 1 .....
205707A ..... Drive Pulley, VT25-E (Rear Half) (2.600"Thick, 6 1/2"OD) (2.600"OD Of Neck, 1.965"ID Of Bore) ..... 2002-Up (Use U205707AK) ..... 1 .....
205707A-5 ..... Cover, VT25-E Drive Pulley (Rear Half)(1.514" Thick, 5.350"OD)(Cast # 700259/12 & ..... 04/244/0303) 2002-Up ..... 1 .....
205707AK ..... Pulley Assembly, VT25-E (Contains: From # 587 to # 795 On The Drive Pulley & From # 797-1 ..... To #755 On The Driven Pulley) 2002-Up (This Is A Rebuilt Assembly) (This Assembly Comes ..... With A Master W/Steels Kit #205006AP Less The Parts We Used To Rebuild The Assembly) ..... 1 .....
205708A ..... Driven Pulley, VT25-E (Rear Half) (9 1/2"Tall, 6 15/16"OD) (Threaded Both Ends) 2002-Up ..... (Use U205707AK) ..... 1 .....
205708-1A ..... Use U205705-1A ..... 9 .....
205710A ..... Drive Transfer Gear, VT25-E (51 Teeth) (.885"Thick, 3.620"OD) (27 Splines) 2002-Up ..... 1 .....
205712A ..... Driven Transfer Gear, VT25-E (72 Teeth) (.845"Thick, 5.040"OD) 2002-Up ..... 1 .....
205716A ..... Differential Assembly, VT25-E (74 Teeth, 2 Groove, 1.148"Thick, 7 13/16"OD Ring Gear) ..... (8 Rivits) 2002-Up ..... 1 .....
205716F ..... Differential Assembly, VT25-E (80 Teeth, 3 Groove)(1.150" Thick)(7 9/16"OD Ring Gear) ..... 2002-Up ..... 1 .....
205725A ..... Case Plug, VT25-E Pinion To Case (1.945"OD) (Cast # 2421493 & 030641) 2002-Up ..... 1 .....
205730A ..... Pinion, VT25-E (21 Teeth, 2 Groove, 2.470"OD Gear) (3.805"Long) 2002-Up ..... 1 .....
205730F ..... Pinion, VT25-E (26 Teeth, 3 Groove, 2.665"OD Gear) (3.805" Long) 2002-Up ..... 1 .....
205740A ..... Valve Body, VT25-E (5 Switch) (Cast # 20600013DB) 2002-Up (Customer Must Use Their ..... Circuit Board) ..... 1 .....
205741A-1 ..... Manual Valve, VT25-E Valve Body (5 3/4"Long) 2002-Up ..... 1 .....
205750A ..... Bell Housing, VT25-E (5 1/8" Top Bolts) (Starter At 3:30) (Cast # 24222691) 2002-Up ..... 1 .....
205750AA ..... Bell Housing, VT25-E (5 1/8" Top Bolts)(Starter At 3:30)(Cast # 24222585) 2002-Up ..... 1 .....
20750AB ..... Bell Housing, VT25-E (AWD) (5 1/8" Top Bolts)(Starter At 3:30)(Cast # 24222679) 2002-Up ..... 1 .....
205755A ..... Case Cover, VT25-E (Aluminum) (14 Bolts To Case) (Cast # 24219404) 2002-Up ..... 1 .....
205756A ..... Rear Cover, VT25-E Driven Pulley (Aluminum, 6 Bolt) (Cast # 24223006/1) 2002-Up ..... 1 .....
205759A ..... Rear Cover, VT25-E Drive Pulley (Aluminum, 4 Bolt) (Cast # 24223007/1) 2002-Up ..... 1 .....
205760A ..... Case, VT25-E (Cast # 24222695) 2002-Up ..... 1 .....
205767A ..... Pan, VT25-E Top (17 Bolt, Tin) 2002-Up ..... 1 .....
205776AK ..... Bolt Set, VT25-E Bell Housing To Case (22 Pieces) 2002-Up ..... 1 .....
205777AK ..... Bolt Set, VT25-E Pump To Case (4 Pieces) 2002-Up ..... 1 .....
205780AK ..... Bolt Set, VT25-E Case Cover To Case (14 Pieces) 2002-Up ..... 1 .....
205781AK ..... Bolt Set, VT25-E Drive Pulley Rear Cover (4 Pieces) 2002-Up ..... 1 .....
205783AK ..... Bolt Set, VT25-E Holds Retainer # 695 To Case Cover (3 Pieces) (10mm) 2002-Up ..... 1 .....
205784AK ..... Bolt Set, VT25-E Driven Pulley Rear Cover (6 Pieces) 2002-Up ..... 1 .....
205789AK ..... Bolt Set, VT25-E Top Pan (17 Pieces) 2002-Up ..... 1 .....
205791AK ..... Bolt Set, VT25-E Valve Body To Case (18 Pieces) 2002-Up ..... 1 .....
205795A ..... Nut, VT25-E Drive Pulley Shaft (.308"Thick, 1.325"ID) (46mm) 2002-Up ..... 1 .....
205797A ..... Nut, VT25-E Driven Pulley Shaft (Rear) (1.445"ID) (49mm) 2002-Up ..... 1 .....

© Whatever It Takes Transmission Parts. Inc.

205797A-1 ..... Nut, VT25-E Driven Pulley Shaft (Front) (1.125”ID) (42mm) 2002-Up 1
205798AK ..... Nut Set, VT25-E Holds Bearing Retainer To Case Cover (3 Pieces) (10mm) 2002-Up 1
205799A ..... Nut, VT25-E Holds Manual Shaft To Rooster Comb 2002-Up 1
205845A ..... Reluctor, VT25-E Speed Sensor (6 7/8”OD) (30 Outer Splines) 2002-Up 1
205872A ..... Use U205877A 1
205873A ..... Snap Ring, VT25-E Holds 9 Check Balls To Drive Pulley Shaft (Front) (.070”Thick, 1.665”OD) 2002-Up 1
205873AA ..... Snap Ring, VT25-E Holds 9 Check Balls To Drive Pulley Shaft (Rear) (.070”Thick, 1.960”OD) 2002-Up 1
205876A ..... Snap Ring, VT25-E Holds Forward Clutch Pressure Plate In Front Drive Pulley Half (.059”Thick, 7 3/16”OD) 2002-Up 1
205877A ..... Snap Ring, VT25-E Holds Forward Clutch Return Spring In Drive Pulley (.050”Thick, 1.375”OD) (W/2 Eyelets) 2002-Up (Also Fits VT25-E Snap Ring # 872 2002-Up) 1
205881A ..... Snap Ring, VT25-E Holds Reluctor To Reverse Planet (.058”Thick, 4 3/4”OD) (W/2 Ears) 2002-Up 1
205892A ..... Snap Ring, VT25-E Holds Reverse Clutch Pressure Plate In Case (.059”Thick, 7 3/8”OD) 2002-Up 1
205893A ..... Snap Ring, VT25-E Holds Reverse Clutch Return Spring In Case (.058”Thick, 3.220”OD) 2002-Up 1
205894A ..... Snap Ring, VT25-E Holds 6 Check Balls To Drive Pulley Shaft (.070”Thick, 1.644”OD) (1 V Notch) 2002-Up 2
205895A ..... Snap Ring, VT25-E Holds Bearing # 235 To Case Cover 2002-Up 1
205897A ..... Snap Ring, VT25-E Holds Driven Sprocket To Pump Shaft (.037”Thick, .520”OD) (W/2 Eyelets) 2002-Up 1
205899A ..... Snap Ring, VT25-E Holds Driven Transfer Gear To Pinion Shaft (.061”Thick, 1.755”OD) (W/2 Eyelets) 2002-Up 1
205960AK ..... Piston Kit, VT20E/VT25E CVT (4 Pieces)(Black Pistons) 1
205961A ..... Piston, VT25-E Drive Pulley Apply (.555”Thick, 5.582”OD, 2.600”ID) 2002-Up 1
205962A ..... Piston, VT25-E Drive Pulley Balance (.480”Thick, 5.070”OD, 2.243”ID) 2002-Up 1
205964A ..... Piston, VT25-E Forward Clutch (.555”Thick, 5.745”OD, 3.075”ID) (Bonded) (W/Check Ball) 2002-Up 1
205966A ..... Piston, VT25-E Reverse Clutch (Bonded) (.475”Thick, 6 1/4”OD, 3.395”ID) 2002-Up 1
205974A ..... Spring, VT25-E Forward Clutch Return (.063”Thick, 3.845”OD, 6 Fingers) 2002-Up 1
205976A ..... Spring & Retainer, VT25-E Reverse Clutch Return (.920”Thick, 4.380”OD, 3.240”ID) (30 Coil Springs) 2002-Up 1
205984A ..... Retainer, VT25-E Forward Clutch Return Spring (.020”Thick, 1.750”OD, 1.260”ID) 2002-Up (Also Fits VT25-E Spacer # 256 2002-Up) 1-2
205991A-4 ..... Manual Shaft, VT25-E (4 7/8” Long) 2002-Up 1
205994A ..... Park Rod Actuator, VT25-E (4 7/8”Long, .710”OD Ball) 2002-Up 1
205995A ..... Park Pawl Assembly, VT25-E (3 Pieces) (2.715”Long Park Pawl) 2002-Up 1
205996A ..... Fitting, VT25-E Cooler Line (Push-In Type) (Bonded) 2002-Up 1
205999A ..... Tube Set, VT25-E (2 Pieces Metal Held By Rubber Hose) 2002-Up 1

© Whatever It Takes Transmission Parts. Inc.

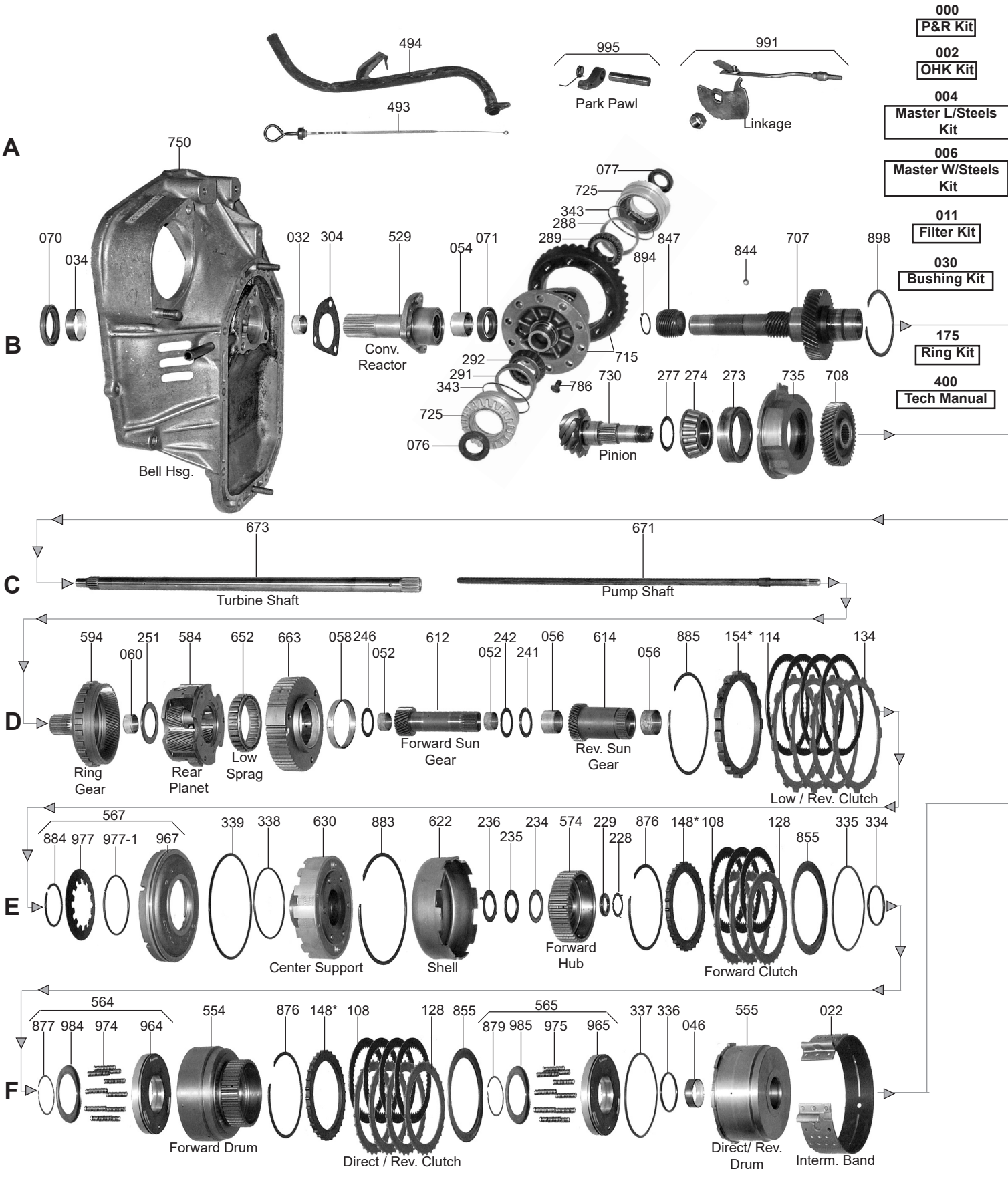

000 P&R Kit

002 OHK Kit

004 Master L/Steels Kit

006 Master W/Steels Kit

011 Filter Kit

030 Bushing Kit

175 Ring Kit

400 Tech Manual

© Whatever It Takes Transmission Parts. Inc.

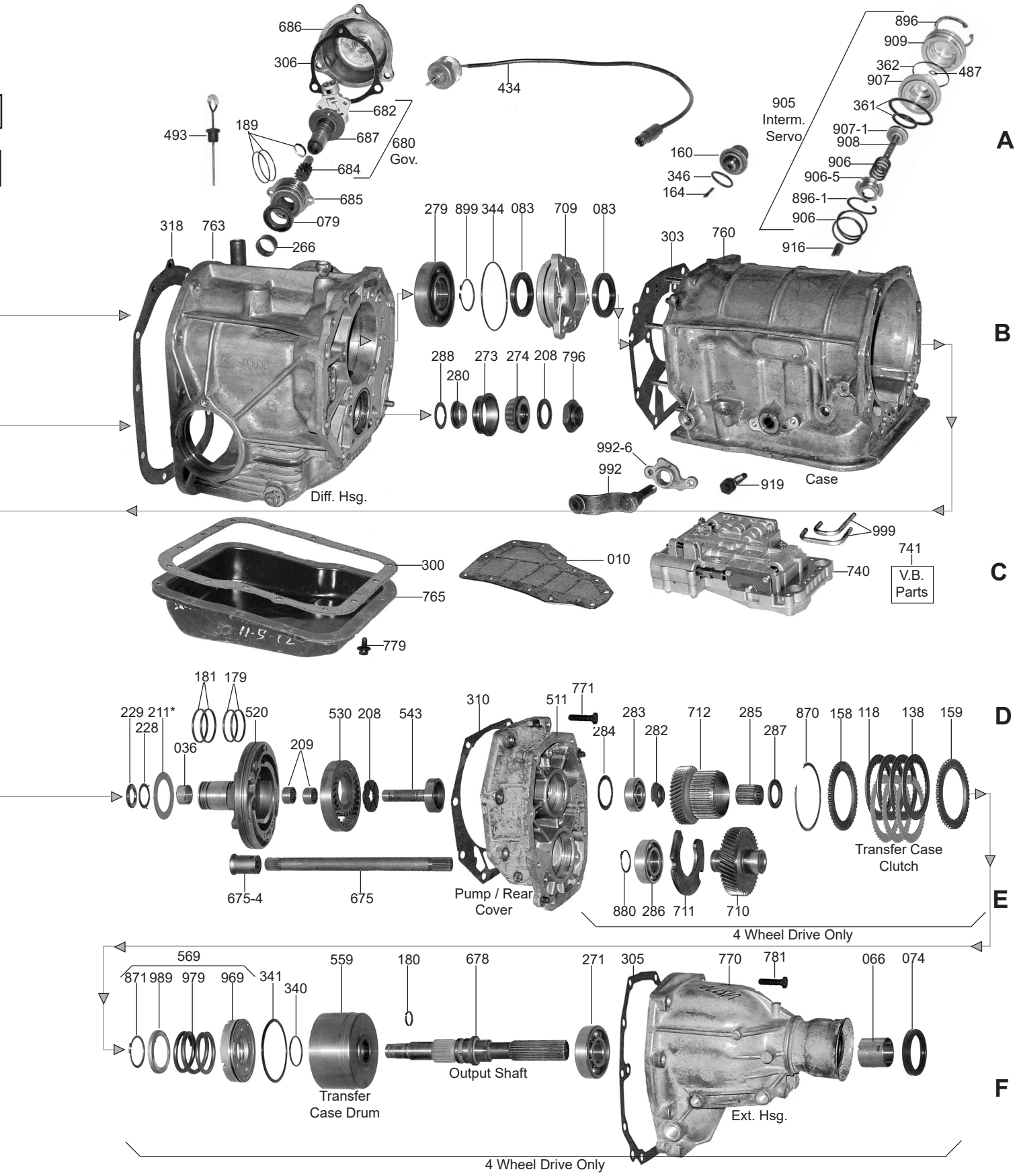

SUBARU

© Whatever It Takes Transmission Parts. Inc.

PART #	PAPER & RUBBER KIT	QTY.	REFERENCE #
13000	Paper & Rubber Kit, M41 1975-Up	1	

PART #	OVERHAUL KITS	QTY.	REFERENCE #
13002	Overhaul Kit, M41 1975-Up	1	
13002A	Overhaul Kit, M41 1983-Up	1	

PART #	MASTER L/STEEL KIT	QTY.	REFERENCE #
13004	Master L/Steels Kit, M41 Without Transfer Case Plates 1975-82	1	
13004A	Master L/Steels Kit, M41 With Transfer Case Plates 1975-83	1	
13004AB	Master L/Steels Kit, M41 Without Transfer Case Plates 1983-84	1	
13004AC	Master L/Steels Kit, M41 With Transfer Case Plates 1983-84	1	
13004B	Master L/Steels Kit, M41 Without Transfer Case Plates 1985-Up	1	
13004C	Master L/Steels Kit, M41 With Transfer Case Plates 1985-Up	1	

PART #	MASTER W/STEEL KIT	QTY.	REFERENCE #
13006	Master W/Steels Kit, M41 Without Transfer Case Plates 1975-82	1	
13006A	Master W/Steels Kit, M41 With Transfer Case Plates 1975-82	1	
13006AB	Master W/Steels Kit, M41 Without Transfer Case Plates 1983-84	1	
13006AC	Master W/Steels Kit, M41 With Transfer Case Plates 1983-84	1	
13006B	Master W/Steels Kit, M41 Without Transfer Case Plates 1985-Up	1	
13006C	Master W/Steels Kit, M41 With Transfer Case Plates 1985-Up	1	

PART #	FILTER	QTY.	REFERENCE #
53010	Filter, M41 1975-92	1	

PART #	FILTER KIT	QTY.	REFERENCE #
13011	Filter Kit, M41 1975-82	1	
13011A	Filter Kit, M41 1983-89	1	
13011B	Filter Kit, M41 1990-Up	1	

PART #	BANDS	QTY.	REFERENCE #
13022	Band, M41 Intermediate	1	

PART #	BUSHINGS	QTY.	REFERENCE #
13030	Bushing Kit, M41	1	

PART #	METAL CLAD SEALS	QTY.	REFERENCE #
13070	Seal, M41 Front	1	
13071BA	Seal, M41 Stator Tube (1 7/8”OD)	1	80762-8030
13071BB	Seal, M41 Stator Tube (1 3/4”OD)	1	
13072	Seal, M41 Linkage	1	3789137
13073	Seal, M41 4x4 Transfer Drive Shaft To Case	1	80672-1020
13074	Seal, M41 Rear (Extension Housing) 4x4 (35x50x11mm) 1975-Up	1	80673-2020
13075	Seal, M41 Differential Case (42x64x12mm) 1975-79	1	80674-2130
13075A	Seal, M41 Differential Case 1979-Up	1	
13076	Seal, M41 Right Axle (1 3/4”OD Of Differential Output Shaft) 1975-92	1	
13076A	Seal, M41 Right Axle (2”OD Of Differential Output Shaft) (4x4 With Turbo) 1975-93	1	
13077	Seal, M41 Left Axle (1 3/4”OD) 1975-92	1	
13077A	Seal, M41 Left Axle (4x4 With Turbo) 1975-92	1	
13078	Seal, Speed-O Shaft (10x18x7mm) 1975-Up	1	80671-2030
13079	Seal, M41 Governor To Case	1	
13083	Seal, M41 Reduction Drive Gear (2.280”OD) (1.570”ID) (Presses Into # 709)	2	80674-0030

PART #	FRICTION CLUTCH	QTY.	REFERENCE #
53100	Friction, M41 Forward & Direct Clutch (.063”)	6-7	0338-19-500A
13108	Friction, M41 Forward & Direct Clutch (.063”) (Use 53100)	6-7	0338-19-500A

© Whatever It Takes Transmission Parts. Inc.

13114	Friction, M41 Low/Reverse Clutch (.092"Thick)(51 Teeth) 1975-82	3-4	340798710
13114A	Friction, M41 Low/Reverse Clutch (.098"Thick)(45 Teeth) 1983-84	3-4	340798720
13114B	Friction, M41 Low/Reverse Clutch (.095"Thick)(Smooth) 1985-Up	5	31662AA010
13118	Friction, M41 Transfer Clutch (.114")	3-4	31588AA041

PART #	STEEL CLUTCH	QTY.	REFERENCE #
53120	Steel, M41 Forward & Direct Clutch (.079")	6-7	45361-0100
13128	Steel, M41 Forward & Direct Clutch (.079") (Use 53120)	6-7	45361-0100
13134	Steel, M41 Low/Reverse Clutch (.071")	4-7	34425-8700
13134A	Steel, M41 Low/Reverse Clutch (.071") 1983-84	4-5	34425-8710
13134B	Steel, M41 Low/Reverse Clutch (.091")	5	31666AA010
13138	Steel, M41 Transfer Clutch (.071")	2-3	31589AA000

PART #	CLUTCH PRESSURE PLATES	QTY.	REFERENCE #
53140A	Pressure Plate, M41 Forward & Direct (.190")	1	
53140B	Pressure Plate, M41 Forward & Direct (.197")	1	
53140C	Pressure Plate, M41 Forward & Direct (.205")	1	
53140D	Pressure Plate, M41 Forward & Direct (.213")	1	
53140E	Pressure Plate, M41 Forward & Direct (.220")	1	
53140G	Pressure Plate, M41 Forward & Direct (.236")	1	
53140H	Pressure Plate, M41 Forward & Direct (.244")	1	
53140J	Pressure Plate, M41 Forward & Direct (.265")	1	
53140L	Pressure Plate, M41 Forward & Direct (.295")	1	
13148	Pressure Plate, M41 Forward & Direct Clutch (Use 53140A thru H)	1	
13154	Pressure Plate, M41 Low/Reverse Clutch (.307")	1	
13154A	Pressure Plate, M41 Low/Reverse Clutch (.315")	1	
13154B	Pressure Plate, M41 Low/Reverse Clutch (.323")	1	
13154C	Pressure Plate, M41 Low/Reverse Clutch (.331")	1	
13154D	Pressure Plate, M41 Low/Reverse Clutch (.339")	1	
13154E	Pressure Plate, M41 Low/Reverse Clutch (.346")	1	
13154G	Pressure Plate, M41 Low/Reverse Clutch (.354")	1	
13154H	Pressure Plate, M41 Low/Reverse Clutch (.362")	1	
13154HA	Pressure Plate, M41 Low/Reverse Clutch (.370")	1	
13154J	Pressure Plate, M41 Low/Reverse Clutch (.378")	1	
13158	Pressure Plate, M41 Transfer Clutch (Top) (.185")	1	447677000
13158A	Pressure Plate, M41 Transfer Clutch (Top) (.197")	1	447677001
13158B	Pressure Plate, M41 Transfer Clutch (Top) (.209")	1	447677002
13158C	Pressure Plate, M41 Transfer Clutch (Top) (.220")	1	447677003
13158D	Pressure Plate, M41 Transfer Clutch (Top) (.232")	1	447677004
13159	Pressure Plate, M41 Transfer Clutch (Bottom)	1	

PART #	MODULATORS	QTY	REFERENCE #
13160	Modulator, M41 Screw In (.840" Diaphragm) Turbo	1	
13160A	Modulator, M41 Screw In (.910" Diaphragm) Non-Turbo	1	

PART #	OIL SEALING RINGS	QTY.	REFERENCE #
13175	Ring Kit, M41 1975-Up	1	
53179	Ring, M41 Direct Drum (1.732"OD) (Metal)	2	
53179T	Ring, M41 Direct Drum (1.732"OD) (Teflon)	2	
13180	Ring, M41 Transfer Case Output Shaft (Metal) (Use 157177)	1	
157177	Ring, M41 Transfer Case Output Shaft (Metal)	1	
53181	Ring, Forward Drum (1.692"OD) (Metal)	2	
53181T	Ring, Forward Drum (1.692"OD) (Teflon)	2	
13189T	Ring, Governor (Teflon)	3	
53189T	Ring, M41 Governor Support (Teflon)	2	

PART #	WASHERS & BEARINGS	QTY.	REFERENCE #
13208	Washer, M41 Under Pinion Nut	1	
53211	Washer, M41 Direct Drum (1.50mm) (.059")	1	D37Z-7D014-F
53211A	Washer, M41 Direct Drum (1.50mm) (.067")	1	
53211B	Washer, M41 Direct Drum (1.90mm) (.075")	1	
53211C	Washer, M41 Direct Drum (2.10mm) (.083")	1	
53211D	Washer, M41 Direct Drum (2.30mm) (.091")	1	
53211E	Washer, M41 Direct Drum (2.50mm) (.098")	1	
53211G	Washer, M41 Direct Drum (2.70mm) (.106")	1	31528-X0104

© Whatever It Takes Transmission Parts. Inc.

PART #	WASHERS & BEARINGS (Continued)	QTY.	REFERENCE #
13228	Race, M41 Forward Drum To Stator (3 Tab) 1975-83	2	
13229	Bearing W/Race, M41 Forward Drum To Stator 1975-83	2	
13229A	Bearing W/Race, M41 Forward Drum To Stator (1 Piece) 1984-Up	2	
13234	Race, M41 Forward Hub To Shell (Rear)	1	
13235	Bearing, M41 Hub To Shell	1	
13236	Race, M41 Hub To Shell (Front)	1	
13241	Bearing, M41 Forward Sun Gear To Reverse Sun Gear (For 30 and 31 Teeth Forward Sun Gear)	1	
13241A	Bearing, M41 Forward Sun Gear To Reverse Sun Gear (For 28 Teeth Forward Sun Gear)	1	
13242	Race, M41 Forward Sun Gear To Reverse Sun Gear (For 30 and 31 Teeth Forward Sun Gear)	1	
13242A	Race, M41 Forward Sun Gear To Reverse Sun Gear (For 28 Teeth Forward Sun Gear)	1	
13246	Race, M41 Planet (Inner) 1984-Up	1	
13251	Bearing W/Race, M41 Planet (Outer)	1	
13265	Washer, M41 Governor To Cover	1	
13271	Ball Bearing, M41 Rear Transfer Output Shaft	1	
13274	Ball Bearing, M41 Pin Shaft	1	
13274B	Ball Bearing, M41 Pin Shaft	1	
13277	Shim, M41 Under Pinion Bearing	1	
13279	Ball Bearing, M41 Reduction Druive	1	
13280	Collar, M41 Reduction Driven Gear To Ball Bearing	1	
13282	Washer, M41 Driven Transfer Gear To Ball Bearing	1	
13283	Ball Bearing, M41 Driven Transfer	1	
13284	Shim, M41 Pump Cover To Ball Bearing	1	
13285	Caged Needle Bearing, M41 Output Shaft To Driven Transfer Gear	1	
13286	Ball Bearing, M41 Front Transfer Drive Gear	1	
13287	Washer, M41 Transfer Clutch Drum To Driven Transfer Gear	1	
13288	Shim, M41 Reduction Drive Gear To Collar	1	

PART #	GASKETS	QTY.	REFERENCE #
13300	Gasket, M41 Bottom Pan 1975-82	1	34539-3600
13300A	Gasket, M41 Bottom Pan 1983-89	1	44539-7000
13300B	Gasket, M41 Bottom Pan 1990-Up	1	31397-AA050
13303A	Gasket, M41 Differential To Case 1975-82	1	
13303B	Gasket, M41 Differential To Case 1983-Up	1	
13310A	Gasket, M41 Pump To Case 1975-82	1	
13310B	Gasket, M41 Pump To Case 1983-Up	1	
13318A	Gasket, M41 Differential To Bell Housing 1975-82	1	
13318B	Gasket, M41 Differential To Bell Housing 1983-Up	1	

PART #	TECHNICAL MANUALS	QTY.	REFERENCE #
13400	Technical Manual, M41 3 Speed Subaru	1	83-SUBA3TM

PART #	ELECTRICAL COMPONENTS	QTY.	REFERENCE #
13433	Solenoid, M41 Transfer Clutch	1	
13434	Solenoid, M41 Kickdown	1	
13437	Switch, M41 Temperature (Transfer Case)	1	

PART #	HARD PARTS	QTY.	REFERENCE #
13511	Rear Cover, M41 2WD (6 Bolt) 1975-82	1	
13511A	Rear Cover, M41 2WD (8 Bolt) 2 Hole Mount 1983-84	1	
13511B	Rear Cover, M41 2WD (8 Bolt) 3 Hole Mount 1985-Up	1	
13511C	Rear Cover, M41 4x4	1	
13520	Stator W/Gears, M41 1975-82	1	
13520A	Stator W/Gears, M41 (Takes A 3 Tab Race #228) 1983	1	
13520B	Stator W/Gears, M41 (Takes A 1 Piece Bearing #229) 1984-Up	1	
13529A	Converter Reactor, M41 (4 1/2" long)	1	
13529B	Converter Reactor, M41 (5 3/16" Long) (1 7/8"ID Where The Rear Seal Presses In)	1	
13529BA	Converter Reactor, M41 (5 3/16" Long) (1 3/4"ID Where The Rear Seal Presses In)	1	
13529C	Converter Reactor, M41 (4 3/8" Long) (1 7/8"OD Of Rear Seal)	1	
13529D	Converter Reactor, M41 (4 3/4" Long)	1	
13554	Drum, M41 Forward (Overall Height 3 5/16")	1	
13554B	Drum, M41 Forward (Overall Height 3 1/16")	1	
13554BA	Drum, M41 Forward (Overall Height 3 1/16") Uses 1 Piece Bearing #229	1	

© Whatever It Takes Transmission Parts. Inc.

13555	Drum M41 Direct Clutch (3 Clutch)	1	
53555A	Drum, M41 Direct Clutch (4 Clutch)	1	
13559A	Drum, M41 Transfer Clutch	1	
13564	Piston Kit, M41 Forward Clutch	1	
13565	Piston Kit, M41 Direct Clutch	1	
13567	Piston Kit, M41 Low/Reverse Clutch	1	
13569	Piston Kit, M41 Transfer Clutch	1	
13574	Clutch Hub, M41 Forward Clutch 1975-84	1	
13574B	Clutch Hub, M41 Forward Clutch 1985-Up	1	
13584AK	Planet W/Sprag, M41(30 Teeth Forward Sun Gear) Aluminum Housing	1	
13584BAK	Planet W/Sprag, M41 (30 Teeth Forward Sun Gear) 4 5/16"OD Hub (Cast Iron Housing)	1	
13584BK	Planet W/Sprag, M41 (30 Teeth Forward Sun Gear) 4 1/8"OD Hub (Cast Iron Housing)	1	
13584CK	Planet W/Sprag, M41 (31 Teeth Forward Sun Gear) Cast Iron Housing	1	
13584EK	Planet W/Sprag, M41 (28 Teeth Forward Sun Gear) 4 5/8"OD Hub (Cast Iron Housing) The 6 Pinions Are All The Same Size	1	
13584GK	Planet W/Sprag, M41 (28 Teeth Forward Sun Gear) 4 5/16"OD Hub (Cast Iron Housing)	1	
13584HK	Planet W/Sprag, M41 (28 Teeth Forward Sun Gear) 4 5/8"OD Hub (Cast Iron Housing) The Pinion Pins Have 3 Small And 3 Large Pins	1	
13594	Ring Gear, M41 Planet (79 Teeth)	1	
13594B	Ring Gear, M41 Planet (78 Teeth)	1	
13594C	Ring Gear, M41 Planet (73 Teeth)	1	
13612A	Sun Gear, M41 Forward (30 Teeth)	1	
13612AB	Sun Gear, M41 Forward (30 Teeth) .645" Thick Gears	1	
13612B	Sun Gear, M41 Forward (31 Teeth)	1	
13612C	Sun Gear, M41 Forward (28 Teeth) .850" Thick Gears	1	
13612D	Sun Gear, M41 Forward (28 Teeth) .746" Thick Gears (No Groove)	1	
13612DA	Sun Gear, M41 Forward (28 Teeth) .746" Thick Gears (1 Groove)	1	
13614A	Sun Gear, M41 Reverse (Rear) 36 Teeth	1	
13614B	Sun Gear, M41 Reverse (Rear) 35 Teeth (1.925"OD Gear) 3.050" Long	1	
13614C	Sun Gear, M41 Reverse (Rear) 35 Teeth (1.925"OD Gear) 3.150" Long	1	
13614D	Sun Gear, M41 Reverse (Rear) 35 Teeth (2.000"OD Gear) 3 1/8" Long	1	
13622	Shell, M41 Connecting 1975-84	1	
13622A	Shell, M41 Connecting 1985-Up	1	
13630	Center Support, M41 (2 1/8"OD Of Sprag Race)	1	
13630C	Center Support, M41 (2 1/4"OD Of Sprag Race)	1	

PART #	SPRAGS & ONE WAY CLUTCHES	QTY.	REFERENCE #
13652	Sprag, M41 1975-84	1	
13652B	Sprag, M41 1985-Up	1	

PART #	HARD PARTS (Continued)	QTY.	REFERENCE #
13671A	Pump Shaft, M41 (21 3/4" Long)	1	
13671B	Pump Shaft, M41 (22 1/4" Long) No Check Ball Inside	1	
13671C	Pump Shaft, M41 (22 1/4" Long) With Check Ball Inside	1	
13673A	Turbine Shaft, M41 (20 1/2" Long)	1	
13673B	Turbine Shaft, M41 (20 15/16" Long) With 3 Lube Holes	1	
13673C	Turbine Shaft, M41 (20 15/16" Long) With 2 Lube Holes	1	
13673D	Turbine Shaft, M41 (20 15/16" Long)	1	
13675	Shaft, M41 Transfer Drive	1	
13678A	Output Shaft, M41 4x4 Rear Output	1	
13680A	Governor, M41 (11 Teeth) 1975-79	1	
13680B	Governor, M41 (12 Teeth) 1980-Up	1	
13684A	Gear, M41 Governor (11 Teeth) 1975-79	1	
13684B	Gear, M41 Governor (12 Teeth) Plastic 1980-Up	1	44084-7000
13684C	Gear, M41 Governor (12 Teeth) Steel With Pin 1980-Up	1	31888-AA000
13685A	Support Sleeve, M41 Governor (1 Ring) Bolts To Differential Case	1	
13685B	Support Sleeve, M41 Governor (No Ring) Bolts To Differential Case	1	
13685C	Support Sleeve, M41 Governor (2 Ring) Bolts To Differential Case	1	
13686	Cover, M41 Governor (4 Bolt)	1	
13686A	Cover, M41 Governor (3 Bolt)	1	

© Whatever It Takes Transmission Parts. Inc.

PART #	HARD PARTS (Continued)	QTY.	REFERENCE #
13707A	Gear, M41 Reduction Drive (33 Teeth Gear) 8 1/2" Long Shaft (Governor Gear Made On The Shaft) Speed-O Gear Slides Off	1	
13707B	Gear, M41 Reduction Drive (34 Teeth Gear) 9" Long Shaft (Governor Gear & Speed-O Gear Are 1 & Made On The Shaft)	1	
13707C	Gear, M41 Reduction Drive (39 Teeth Gear) 9" Long Shaft (Governor Gear & Speed-O Gear Are 1 & Made On The Shaft)	1	
13707E	Gear, M41 Reduction Drive (39 Teeth Gear) 3.622"OD (9" Long Shaft) Governor Gear & Speed-O Gear Are 1 And Made On The Shaft	1	
13707G	Gear, M41 Reduction Drive (39 Teeth Gear) 3.622"OD (9" Long Shaft) Governor Gear Made On The Shaft (Speed-O Gear Slides Off)	1	
13707H	Gear, M41 Reduction Drive (45 Teeth Gear) 9" Long (Governor Gear Made On The Shaft) Speed-O Gear Slides Off	1	
13707HA	Gear, M41 Reduction Drive (45 Teeth Gear) 3.654"OD (9" Long Shaft) Governor Gear & Speed-O Gear Are 1 And Made On The Shaft	1	
13707J	Gear, M41 Reduction Drive (42 Teeth Gear) 3.520"OD (9" Long Shaft) Governor Gear Made On The Shaft (Speed-O Gear Slides Off)	1	
13707L	Gear, M41 Reduction Drive (38 Teeth Gear) 3.544"OD (9" Long Shaft) Governor Gear & Speed-O Gear Are 1 And Made On The Shaft	1	
13707LA	Gear, M41 Reduction Drive (38 Teeth Gear) 3.162"OD (9" Long Shaft) Governor Gear & Speed-O Gear Are 1 And Made On The Shaft	1	
13707LB	Gear, M41 Reduction Drive (38 Teeth Gear) 3.544"OD (9" Long Shaft) Governor Gear Made On The Shaft (Speed-O Gear Slides Off)	1	
13707M	Gear, M41 Reduction Drive (43 Teeth Gear) 9" Long Shaft (Governor Gear Made On The Shaft) (Speed-O Gear Slides Off)	1	
13708A	Gear, M41 Reduction Driven (34 Teeth)	1	
13708B	Gear, M41 Reduction Driven (38 Teeth)	1	
13708C	Gear, M41 Reduction Driven (35 Teeth)	1	
13708D	Gear, M41 Reduction Driven (39 Teeth)	1	
13708E	Gear, M41 Reduction Driven (40 Teeth)	1	
13708G	Gear, M41 Reduction Driven (42 Teeth) (3.464"OD)	1	
13708GA	Gear, M41 Reduction Driven (42 Teeth) (3.518"OD)	1	
13708H	Gear, M41 Reduction Driven (43 Teeth) (3.600"OD)	1	
13708J	Gear, M41 Reduction Driven (33 Teeth)	1	
13709	Retainer, M41 Oil Seal	1	
13710	Gear, M41 Transfer Drive (45 Teeth) (1 Groove)	1	E853116-S
13711	Thrust Plate, M41 Transfer Drive Gear	1	
13712	Gear, M41 Transfer Driven	1	
13715A	Differential Assembly, M41 (33 Teeth) 8 Bolt	1	
13715B	Differential Assembly, M41 (35 Teeth) 8 Bolt	1	
13715C	Differential Assembly, M41 (37 Teeth) 10 Bolt (1.133" Thick Gear)	1	
13715CA	Differential Assembly, M41 (37 Teeth) 10 Bolt (1.200" Thick Gear)	1	
13715D	Differential Assembly, M41 (38 Teeth) 10 Bolt (1.162" Thick Gear)	1	
13715E	Differential Assembly, M41 (87 Teeth) 10 Bolt (1.048" Thick Gear)	1	
13725	Retainer, M41 Differential (Aluminum) Screws In Differential Case	1	
13730A	Pinion Shaft, M41 (8 Teeth) (2.50"OD) 2WD	1	
13730B	Pinion Shaft, M41 (9 Teeth) 2WD	1	
13730C	Pinion Shaft, M41 (10 Teeth) (2.77"OD) 2WD	1	
13730CA	Pinion Shaft, M41 (10 Teeth) (2.50"OD) 2WD	1	
13730CB	Pinion Shaft, M41 (10 Teeth) (2.50"OD) 4x4	1	
13730E	Pinion Shaft, M41 (11 Teeth) (2.90"OD) 2WD	1	
13730EA	Pinion Shaft, M41 (11 Teeth) (2.90"OD) 4x4	1	
13730EB	Pinion Shaft, M41 (11 Teeth) (2.65"OD) 4x4	1	
13730EC	Pinion Shaft, M41 (11 Teeth) (2.65"OD) 2WD	1	
13735	Retainer, M41 Bearing	1	
13740	Valve Body, M41	1	
13750A	Bell Housing, M41 (Starter At 12:00)	1	
13750B	Bell Housing, M41 (Starter At 2:00) 2 Threaded Holes At 12:00	1	
13750C	Bell Housing, M41 (Starter At 2:00) 3 Threaded Holes At 12:01	1	
13760	Case, M41 (6 Bolt Cover) 2WD	1	
13760A	Case, M41 (8 Bolt Cover) 2WD	1	
13760B	Case, M41 (8 Bolt Cover) 4x4	1	
13763	Housing, M41 Differential Case	1	
13763CB	Differential Assembly, M41 (10 Teeth Pinion) (37 Teeth Ring Gear) 4x4 Complete	1	
13763EA	Differential Assembly, M41 (11 Teeth Pinion) (38 Teeth Ring Gear) 4x4 Complete	1	
13765	Pan, M41	1	
13770	Extension Housing, M41 4x4 (8 1/4" Long)	1	
13770A	Extension Housing, M41 4x4 (13" Long)	1	
13775K	Bolt Set, M41 Bell To Differential Case	1	

SUBARU

© Whatever It Takes Transmission Parts. Inc.

13776K	Nut Set, M41 Case To Differential Case	1	
13777K	Bolt Set, M41 Pump To Cover To Case	1	
13778K	Bolt Set, M41 Pump To Cover	1	
13779K	Bolt Set, M41 Pan To Case	1	
13781K	Bolt Set, M41 Extension Housing To Pump Cover	1	
13782K	Bolt Set, M41 Valve Body To Case	1	
13796	Nut, M41 Holds Ball Bearing To Pinion Shaft	1	
13847	Gear, M41 Speed-O Drive	1	
53855	Cushion, M41 Forward & Direct Clutch	1	31529-X0100
23857	Dished Steel, M41 Low/Reverse Clutch	1	31668-X0100
13870	Snap Ring, M41 Holds Transfer Clutch Pressure Plate In Drum	1	
13871	Snap Ring, M41 Holds Transfer Clutch Retainer	1	
13876	Snap Ring, M41 Holds Forward & Direct Clutch Pressure Plate In	1	
13877	Snap Ring, M41 Holds Forward Clutch Retainer	1	
13879	Snap Ring, M41 Holds Direct Clutch Retainer	1	
13880	Snap Ring, M41 Holds Ball Bearing On Transfer Drive Gear	1	0003-507-275
13883	Snap Ring, M41 Holds Center Support In Case	1	
13884	Snap Ring, M41 Holds Spring To Center Support	1	
13885	Snap Ring, M41 Holds Low/Reverse Pressure Plate In Case	1	
13896	Snap Ring, M41 Holds Servo Cover In	1	
13898	Snap Ring, M41 Holds Reduction Drive Gear In Differential Case	1	
13899	Snap Ring, M41 holds Ball Bearing To Reduction Drive Shaft	1	
13905	Servo Assembly, M41 Intermediate	1	
13906	Spring, M41 Intermediate Servo Return (Small One)	1	
13907	Piston, M41 Intermediate Servo	1	
13909	Cover, M41 Intermediate Servo	1	
13919	Screw, M41 Intermediate Band Adjusting	1	
13964	Piston, M41 Forward Clutch	1	
13965	Piston, M41 Direct Clutch	1	
13967	Piston, M41 Low/Reverse Clutch	1	
13969	Piston, M41 Transfer Clutch	1	
13974	Spring, M41 Forward Clutch Return	1	
13975	Spring, M41 Direct Clutch Return	1	
13977	Beveled Spring, M41 Low/Reverse Clutch Return	1	
13979	Spring, M41 Transfer Clutch Return	1	
13984	Retainer, M41 Forward Clutch Spring	1	
13985	Retainer, M41 Direct Clutch Spring	1	
13989	Retainer, M41 Transfer Clutch Spring	1	
13991	Linkage, M41 With Park Rod (Internal)	1	
13992	Shift Lever, M41 (External)	1	
13995	Park Pawl Assembly, M41	1	
13999	Tube Set With Adapter, M41 Valve Body To Servo	1	

© Whatever It Takes Transmission Parts. Inc.

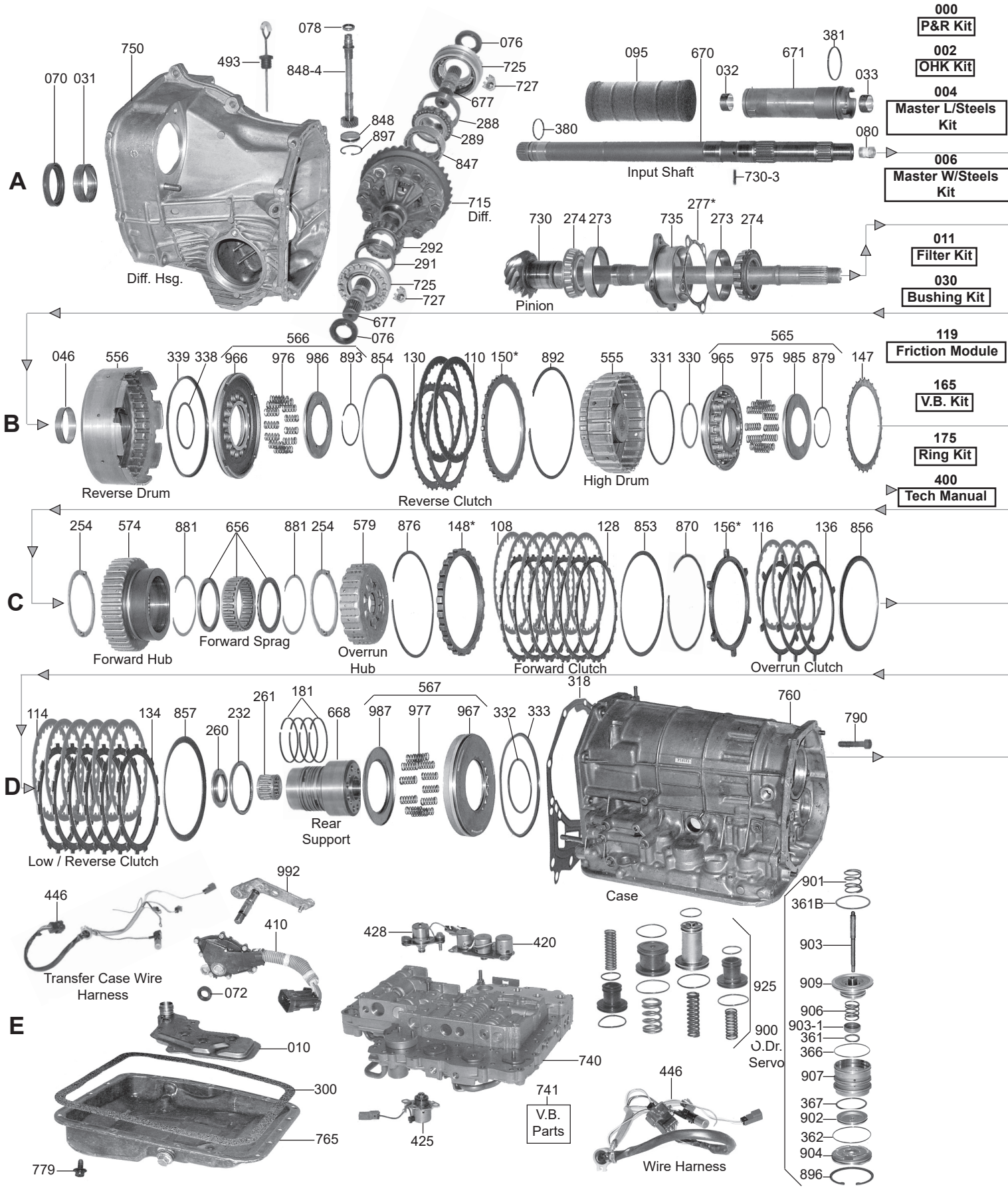
A
B
C
D
E
070
031
750
493
078
848-4
848
897
076
725
727
677
288
289
847
715
Diff.
292
291
725
727
677
076
Diff. Hsg.
095
670
032
671
381
033
380
080
Input Shaft
730-3
730
274
273
277*
735
273
274
Pinion
046
556
339
338
566
966
976
986
893
854
130
110
150*
892
555
331
330
565
965
975
985
879
147
Reverse Drum
Reverse Clutch
High Drum
254
574
881
656
881
254
579
876
148*
108
128
853
870
156*
116
136
856
Forward Hub
Forward Sprag
Overrun Hub
Forward Clutch
Overrun Clutch
114
134
857
232
260
261
181
668
567
987
977
967
332
333
318
760
790
Low / Reverse Clutch
Rear Support
Case
446
992
410
072
Transfer Case Wire Harness
428
420
740
741
V.B. Parts
425
925
900
O.Dr. Servo
901
361B
903
909
906
903-1
361
366
907
367
902
362
904
896
010
300
765
779
446
Wire Harness
000
P&R Kit
002
OHK Kit
004
Master L/Steels Kit
006
Master W/Steels Kit
011
Filter Kit
030
Bushing Kit
119
Friction Module
165
V.B. Kit
175
Ring Kit
400
Tech Manual

SUBARU

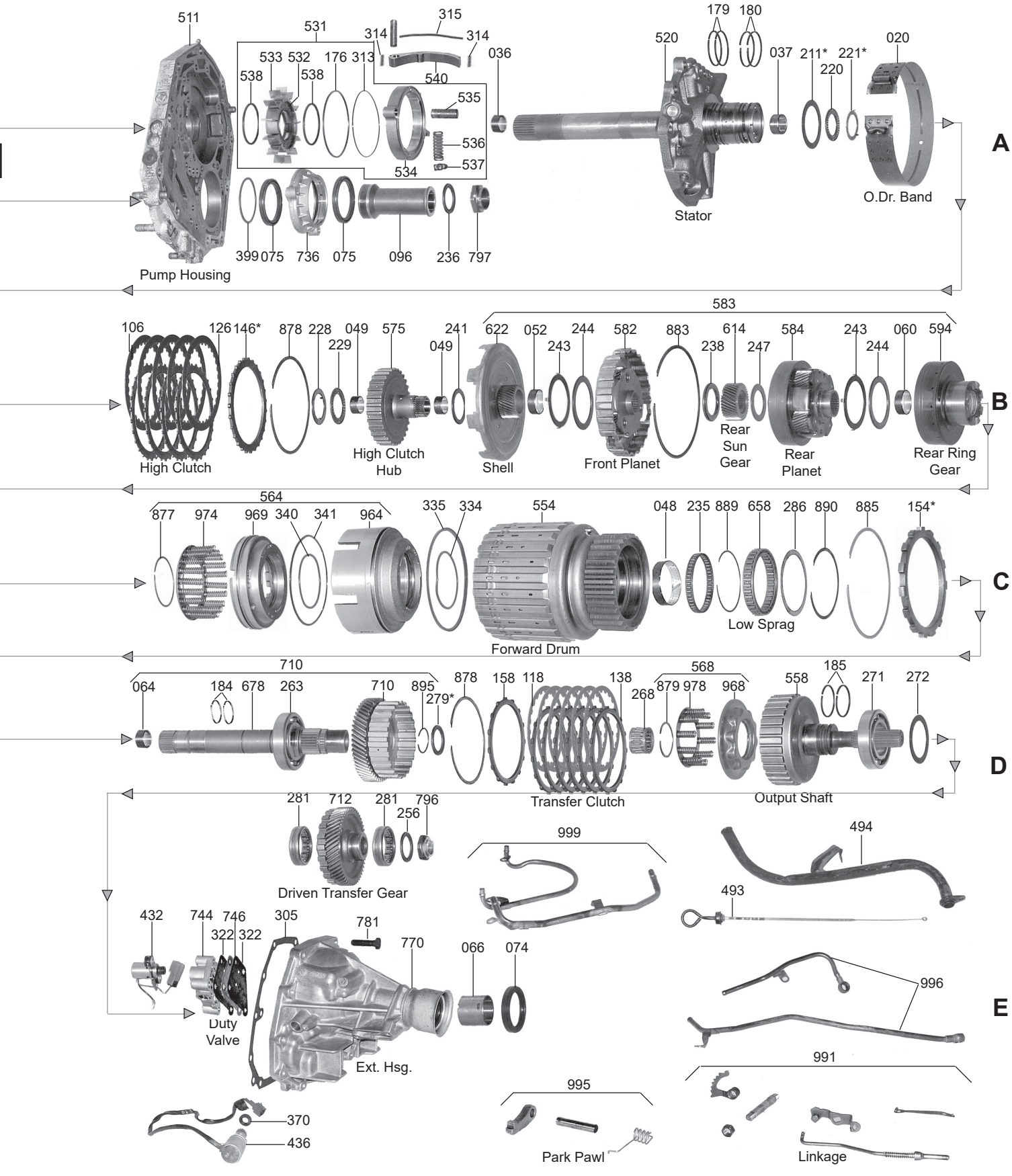

SUBARU

1-800-940-0197

© Whatever It Takes Transmission Parts. Inc.

EC8 / 4EAT (99-Up)

4 Speed FWD / AWD

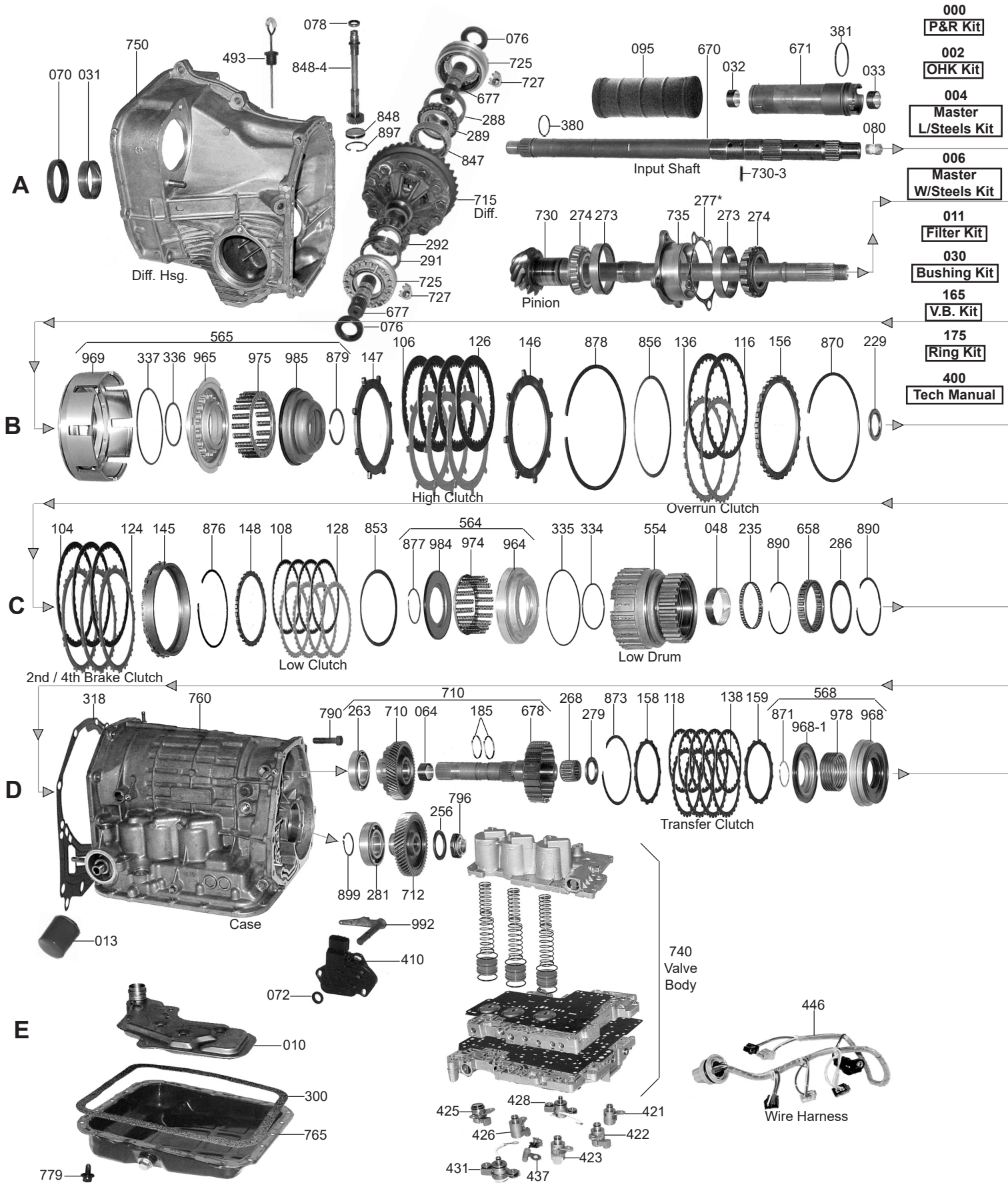

SUBARU

© Whatever It Takes Transmission Parts. Inc.

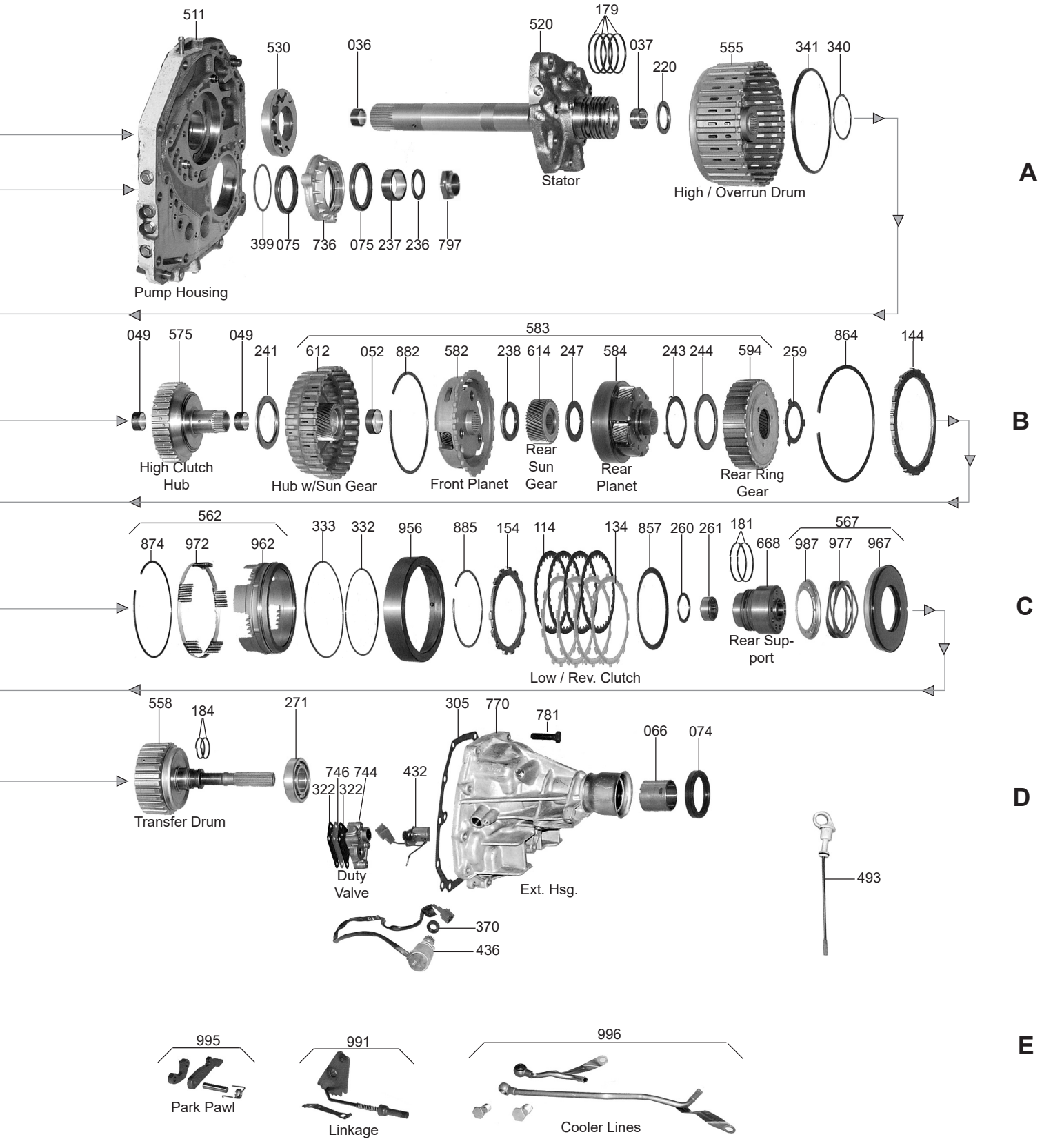

SUBARU

© Whatever It Takes Transmission Parts. Inc.

PART #	PAPER & RUBBER KIT	QTY.	REFERENCE #
23000	Paper & Rubber Kit, EC8 (4 Speed) 1987-98	1	
23000E	Paper & Rubber Kit, EC8 (4 Speed) 7/1998-2003	1	

PART #	OVERHAUL KITS	QTY.	REFERENCE #
23002	Overhaul Kit, EC8 (4 Speed) 1987-98	1	
23002E	Overhaul Kit, EC8 (4 Speed) 7/1998-Up (Without Valve Body Gaskets)(Valve Body Gaskets Are Bonded To The Seperator Plate & Not In The Kits)	1	
23002EF	Overhaul Kit, EC8 (4 Speed) 7/1998-Up (With Valve Body Gaskets) (Farpak)	1	

PART #	MASTER L/STEEL KIT	QTY.	REFERENCE #
23004	Master L/Steels Kit, EC8 (With Transfer Case Clutch) 1987-92 (1988-89 Coupe, Sedan, Wagon) 1988-91 XT6 (1990-91 Loyale) 1990-92 Legacy Without Turbo	1	
23004A	MasterL/Steels Kit, EC8 (Without Transfer Case Clutch) 1987-92 (1988-89 Coupe, Sedan, Wagon) 1988-91 XT6 (1990-91 Loyale) 1990-92 Legacy Without Turbo	1	
23004B	Master L/Steels Kit, EC8 (With Transfer Case Clutch) 1991-94 (1991-94 Legacy With Turbo) 1993-94 Legacy Without Turbo (1992-93 SVX) Reverse Friction Has 34 Teeth	1	
23004BA	Master L/Steels Kit, EC8 (Without Transfer Case Clutch) 1991-94 (1991-94 Legacy With Turbo) 1993-94 Legacy Without Turbo (1992-93 SVX) Reverse Friction Has 34 Teeth	1	
23004C	Master L/Steels Kit, EC8 (With Transfer Case Clutch) 1995-98 (1993-98 Impreza) Reverse Friction Has 30 Teeth	1	
23004CA	Master L/Steels Kit, EC8 (Without Transfer Case Clutch) 1995-98 (1993-98 Impreza) Reverse Friction Has 30 Teeth)	1	
23004D	Master L/Steels Kit, EC8 (With Transfer Case Clutch) 1995-98 (Reverse Friction Has 34 Teeth)	1	
23004DA	Master L/Steels Kit, EC8 (Without Transfer Case Clutch) 1995-98 (Reverse Clutch Has 34 Teeth)	1	
23004EF	Master L/Steels Kit, EC8 (Without Transfer Case Clutch) 7/1998-Up (With Valve Body Gaskets) (Farpak)(Without Bonded Pistons)	1	

PART #	MASTER W/STEEL KIT	QTY.	REFERENCE #
23006	Master W/Steels Kit, EC8 (With Transfer Case Plates) 1987-92 (1988-92 Coupe, Sedan, Wagon) 1988-91 XT6 (1990-91 Loyale) 1990-92 Legacy	1	
23006A	Master W/Steels Kit, EC8 (Without TransferCase Plates) 1987-92 (Without Turbo) 1988-89 Coupe, Sedan, Wagon (1988-91 XT6) 1990-91 Loyale	1	
23006B	Master W/Steels Kit, EC8 (With Transfer Case Plates) 1991-94 (1990-92 Legacy Without Turbo) 1991-94 Legacy With Turbo (1993-94 Legacy Without Turbo)	1	
23006BA	Master W/Steels Kit, EC8 (Without Transfer Case Plates) 1991-94 (1992-93 SVX) 1991-94 Legacy With Turbo (1993-94 Legacy Without Turbo)	1	
23006C	Master W/Steels Kit, EC8 (With Transfer Case Clutch) 1995-98 (1993-98 Impreza) 1992-93 SVX (Reverse Friction Has 30 Teeth)	1	
23006CA	Master W/Steels Kit, EC8 (Without Transfer Case Clutch) 1995-98 (1993-98 Impreza) Reverse Friction Has 30 Teeth)	1	
23006D	Master W/Steels Kit, EC8 (With Transfer Case Clutch) 1995-98 (Reverse Friction Has 34 Teeth)	1	
23006DA	Master W/Steels Kit, EC8 (Without Transfer Case Clutch) 1995-98 (Reverse Clutch Has 34 Teeth)	1	
23006EF	Master W/Steels Kit, EC8 (Without Transfer Case Clutch) 7/1998-Up (With Valve Body Gaskets) (Farpak)(Without Bonded Pistons)	1	

PART #	FILTER	QTY.	REFERENCE #
23010	Filter, EC8 (XT6, Loyale) 1987-91	1	
23010A	Filter, EC8 (Legacy, SVX, Impreza 1990-98) All 1992-98	1	
23010E	Filter, EC8 (Subaru)(19 Bolt Holes) 1999-Up	1	
23010EA	Filter, EC8 (Subaru)(3 Bolt Holes) 2004-Up	1	
23013E	Filter, EC8 (Subaru) Spin On 1999-Up	1	

PART #	FILTER KIT	QTY.	REFERENCE #
23011	Filter Kit, EC8 (XT6, Loyale) 1987-91 (Cork)	1	
23011A	Filter Kit, EC8 (Legacy, SVX, Impreza 1990-Up) All 1992-Up (Cork)	1	
23011E	Filter Kit, EC8 (Subaru, Forester) 7/1998-Up	1	

© Whatever It Takes Transmission Parts. Inc.

PART #	BANDS	QTY.	REFERENCE #
73020	Band, EC8 Overdrive (1 1/2" Wide) 1987-98	1	

PART #	BUSHINGS	QTY.	REFERENCE #
23030	Bushing Kit, EC8 1987-98	1	
23031	Bushing, EC8 Bell Housing (.590"Wide)(2.245"OD)(1.970"ID)(With 4 Notches) 1987-Up	1	
23036	Bushing, EC8 Stator (Front) 1987-98	1	
23036E	Bushing, EC8 Stator (Front) 7/1998-Up (Use Tool #T-70331 To Install Bushing)	1	
T-70331	Tool For Installing Bushing #23036E & 23037E	1	
23037	Bushing, EC8 Stator (Rear) 1987-98	1	
23037E	Bushing, EC8 Stator (Rear) 7/1998-Up (Use Tool #T-70331 To Install Bushing)	1	
23048A	Bushing, EC8 Forward Drum (.565" Wide) 1987-98	1	
23048E	Bushing, EC8 Forward Drum (.340" Wide) 1999-Up	1	

PART #	METAL CLAD SEALS	QTY.	REFERENCE #
23070A	Seal, EC8 Front (Converter Housing)(.390" Thick)(2.568"OD)(1.925"ID) 1987-Up (All Except Impreza 1995-Up)	1	8067-50030
23070B	Seal, EC8 Front (Impreza) 1995-Up	1	8067-50040
23072	Seal, EC8 Linkage	1	8067-16040
23074	Use 53074	1	8067-35190
53074	Seal, EC8 Rear (4x4 Extension Housing)(1.375"ID) W/Out Flange 1987-Up	1	
23075	Seal, EC8 Pinion Shaft (.235" Thick)(2.604"OD)(2.000"ID) 1987-Up	2	
23076A	Seal, EC8 Right Axle (.355" Thick)(1.975"OD)(1.090"ID) 1987-03	1	
23076B	Seal, EC8 Left Axle (.355" Thick)(1.975"OD)(1.105"ID) 1987-03	1	
23095	Seal, EC8 Front Pump Oil Pipe 1987-98	1	31295-AA003
23095E	Seal, EC8 Front Pump Oil Pipe 1999-Up (Can Use 23095)	1	
23096	Seal Pipe, EC8 pinion (Except 1995-98 Legacy & SVX) 1987-98	1	32296-AA020
23096A	Seal Pipe, EC8 Pinion (Legacy & SVX) 1995-98	1	32296-AA041

PART #	FRICTION CLUTCH	QTY.	REFERENCE #
23104E	Friction, EC8 2nd & 4th Brake Clutch (.062") 30 Teeth (6 9/16"OD) 1999-Up (The 3rd Set From Pump) (Sets In The Case)	3	
23106E	Friction, EC8 High Clutch (.062") 36 Teeth (5 7/16"OD) 1999-Up (The 1st Set From Pump) In High/Overrun Drum	4	
93106B	Friction, EC8 High Clutch (.063") 30 Teeth 1987-Up	4-5	
73108	Fricton, EC8 Forward Clutch (.079") 36 Teeth 1987-Up	4-6	6880912
73108A	Friction, EC8 Forward Clutch (.063") 36 Teeth 1995-98	4-6	
23108E	Friction, EC8 Low Clutch (.070") 30 Teeth (5 7/16"OD) 1999-Up	4	
23110A	Friction, EC8 Reverse Clutch (.079") 38 Teeth 1997-Up	2	
93110A	Friction, EC8 Reverse Clutch (.079") 34 Teeth (Except Impreza) 1987-Up	2	
73110AA	Friction, EC8 Reverse Clutch (.079") 30 Teeth (Impreza) 1993-98	2	
73114	Friction, EC8 Low/Reverse Clutch (.076") 30 Teeth 1987-92 (1988-89 Coupe, Sedan, Wagon) 1988-91 XT6 (1990-91 Loyale) 1990-92 Legacy Without Turbo	5-6	
23114A	Friction, EC8 Low/Reverse Clutch (.061") 30 Teeth (High Energy) 1991-Up (1991-94 Legacy With Turbo) 1993-94 Legacy Without Turbo	6-8	
23114B	Friction, EC8 Low/Reverse Clutch (.070") 30 Teeth 4/1995-Up (1992-93 SVX)	5-6	
73116	Friction, EC8 Overrun Clutch (.079") 18 Teeth 1987-98	3	6880901
23116E	Friction, EC8 Overrun Clutch (.060") 30 Teeth (5 7/8"OD) 1999-Up (The 2nd Set From Pump) In High/Overrun Drum	2	
23118	Friction, EC8 Transfer Case (.079") 24 Teeth 1987-89	5	
23118A	Friction, EC8 Transfer Case Clutch (.071")(24 Teeth) 1990-Up	6	
23118AA	Friction, EC8 Transfer Case Clutch (.071")(50 Teeth)(4.650"OD) 1996-Up	6	
23119E	Friction Module, EC8 7/1998-Up	1	

PART #	STEEL CLUTCH	QTY.	REFERENCE #
23124E	Steel, EC8 2nd & 4th Clutch (.094") 23 Teeth (5 5/8"ID) 1999-Up (The 3rd Set From Pump) Sets In The Case (Missing 1 Tooth)	2	
23126A	Use 93126BA	5-7	
93126BA	Steel, EC8 High Clutch (.079")(27 Teeth) 1993-98	5-7	
23126B	Steel, EC8 High Clutch (.108") 1991-98	5-6	
93126B	Steel, EC8 High Clutch (.118") (27 Teeth) 1987-Up	3-4	
23126E	Steel, EC8 High Clutch (.078") 8 Teeth (4 3/8"ID) 1999-Up (1st Set From Pump) In High/Overrun Drum	4	

© Whatever It Takes Transmission Parts. Inc.

PART #	STEEL CLUTCH (Continued)	QTY.	REFERENCE #
73128	Steel, EC8 Forward Clutch (.071") (24 Teeth) 1987-Up	2	
73128A	Steel, EC8 Forward Clutch (.079") (24 Teeth) 1993-Up	4-7	
23128E	Steel, EC8 Low Clutch (.055") 30 Teeth (4 13/16"ID) 1999-Up (The 4th Set From Pump) In Low Drum With Sprag	4-6	
93130A	Steel, EC8 Reverse Clutch (.079") 5.300"ID (30 Teeth) 1987-Up	1-2	
73130B	Steel, EC8 Reverse Clutch (.079") 5.090"ID (30 Teeth) 1993-Up	2	
73134	Steel, EC8 Low/Reverse Clutch (.079") (14 Teeth) 1987-92	6	
73134A	Steel, EC8 Low/Reverse Clutch (.051") (14 Teeth) 1987-92	AR	
23134B	Steel, EC8 Low/Reverse Clutch (.071") (14 Teeth) 1989-94	6-8	
23134C	Steel, EC8 Low/Reverse Clutch (.063") (14 Teeth) 1993-Up	4	
73136	Steel, EC8 Overrun Clutch (.079") (6 Teeth) 1987-Up	3	
23136E	Steel, EC8 Overrun Clutch (.062") 32 Teeth (5 3/16"ID) 1999-Up (The 2nd Set From Pump) In High/Overun Drum	2	
23138	Steel, EC8 Transfer Clutch (.071")	5	
23138A	Steel, EC8 Transfer Clutch (.063") 30 Teeth 1991-Up	4-6	

PART #	CLUTCH PRESSURE PLATES	QTY.	REFERENCE #
23144E	Pressure Plate, EC8 2nd/4th Brake Clutch (.235")(21 Teeth)(5.690"ID) 1999-Up (The 3rd Set From Pump) Sets In The Case (Missing 3 Teeth)	1	
23145E	Apply Plate, EC8 2nd & 4th Clutch (23 Teeth) .784" (5 5/8"ID) 1999-Up (The 3rd Set From Pump) Sets In Case (Missing 1 Tooth)	1	
73146A	Pressure Plate, EC8 High Clutch (3.6mm) 1987-98	1	
73146AA	Pressure Plate, EC8 High Clutch (3.8mm) 1987-98	1	
73146AB	Pressure Plate, EC8 High Clutch (4.0mm) 1987-98	1	
73146AC	Pressure Plate, EC8 High Clutch (4.2mm) 1987-98	1	
73146AD	Pressure Plate, EC8 High Clutch (4.4mm) 1987-98	1	
73146AE	Pressure Plate, EC8 High Clutch (4.6mm) 1987-98	1	
73146AG	Pressure Plate, EC8 High Clutch (4.8mm) 1987-98	1	
73146AH	Pressure Plate, EC8 High Clutch (5.0mm) 1987-98	1	
93146GA	Pressure Plate, EC8 High Clutch (.149") 24 Wide Teeth 1995-98	1	
23146EG	Pressure Plate, EC8 High Clutch (4.84mm) 8 Teeth (4 3/8"ID) 1999-Up (1st Set From Pump) In High/Overrun Drum	1	
23147EB	Apply Plate, EC8 High Clutch (3.59mm) 8 Teeth (4 3/8"ID) 1999-Up	1	
73148A	Pressure Plate, EC8 Forward Clutch (8.0mm) 1987-98	1	
73148AA	Pressure Plate, EC8 Forward Clutch (8.2mm) 1987-98	1	
73148AB	Pressure Plate, EC8 Forward Clutch (8.4mm) 1987-98	1	
73148AC	Pressure Plate, EC8 Forward Clutch (8.6mm) 1987-98	1	
73148AD	Pressure Plate, EC8 Forward Clutch (8.8mm) 1987-98	1	
73148AE	Pressure Plate, EC8 Forward Clutch (9.0mm) 1987-98	1	
73148AG	Pressure Plate, EC8 Forward Clutch (9.2mm) 1987-98	1	
73148AH	Pressure Plate, EC8 Forward Clutch (4.33mm)(24 Teeth) 1987-98	1	
23148E	Pressure Plate, EC8 Low Clutch (.163")(30 Teeth)(4.845"ID) 1999-Up (The 4th Set From Pump) In Low Drum With Sprag	1	
93150	Pressure Plate, EC8 Reverse Clutch (4.6mm) 30 Teeth (5.345"ID) 1987-92	1	
93150A	Pressure Plate, EC8 Reverse Clutch (4.8mm) 30 Teeth (5.345"ID) 1987-92	1	
93150B	Pressure Plate, EC8 Reverse Clutch (5.0mm) 30 Teeth (5.345"ID) 1987-92	1	
93150C	Pressure Plate, EC8 Reverse Clutch (5.2mm) 30 Teeth (5.345"ID) 1987-92	1	
93150D	Pressure Plate, EC8 Reverse Clutch (5.4mm) 30 Teeth (5.345"ID) 1987-92	1	
73150A	Pressure Plate, EC8 Reverse Clutch (4.6mm) 30 Teeth (5.080"ID) 1992-98	1	
73150AA	Pressure Plate, EC8 Reverse Clutch (4.8mm) 30 Teeth (5.080"ID) 1992-98	1	
73150AAA	Pressure Plate, EC8 Reverse Clutch (4.9mm) 30 Teeth (5.080"ID) 1992-98	1	
73150AB	Pressure Plate, EC8 Reverse Clutch (5.0mm) 30 Teeth (5.080"ID) 1992-98	1	
73150ABA	Pressure Plate, EC8 Reverse Clutch (5.1mm) 30 Teeth (5.080"ID) 1992-98	1	
73150AC	Pressure Plate, EC8 Reverse Clutch (5.2mm) 30 Teeth (5.080"ID) 1992-98	1	
73150AD	Pressure Plate, EC8 Reverse Clutch (5.4mm) 30 Teeth (5.080"ID) 1992-98	1	
73150AE	Pressure Plate, EC8 Reverse Clutch (5.6mm) 30 Teeth (5.080"ID) 1992-98	1	
73150AG	Pressure Plate, EC8 Reverse Clutch (5.8mm) 30 Teeth (5.080"ID) 1992-98	1	
23154A	Pressure Plate, EC8 Low/Reverse Clutch (6.5mm) 1987-Up	1	
23154AA	Pressure Plate, EC8 Low/Reverse Clutch (6.8mm) 1987-Up	1	
23154AB	Pressure Plate, EC8 Low/Reverse Clutch (7.1mm) 1987-Up	1	
23154AC	Pressure Plate, EC8 Low/Reverse Clutch (7.4mm) 1987-Up	1	
23154AD	Pressure Plate, EC8 Low/Reverse Clutch (7.7mm) 1987-Up	1	
23154AE	Pressure Plate, EC8 Low/Reverse Clutch (8.0mm) 1987-Up	1	
23154AG	Pressure Plate, EC8 Low/Reverse Clutch (8.2mm) 1987-Up	1	
23154AH	Pressure Plate, EC8 Low/Reverse Clutch (8.4mm) 1987-Up	1	

© Whatever It Takes Transmission Parts. Inc.

23156A ..... Pressure Plate, EC8 Overrun Clutch (.180")(6 Teeth)(4.700"ID) 1987-98 (The 4th Set From Pump) (In Forward Drum) 1
23156E ..... Pressure Plate, EC8 Overrun Clutch (.168")(32 Teeth)(5 3/16"ID) 1999-Up (The 2nd Set From Pump) In High/Overrun Drum 1
23158 ..... Pressure Plate, EC8 Transfer Clutch (.127")(15 Teeth)(4.110"ID) 1987-Up 1
23158B ..... Pressure Plate, EC8 Transfer Clutch (.143")(15 Teeth)(4.110"ID) 1987-Up (Also Fits EC8 # 159 1999-Up) 1
23158D ..... Pressure Plate, EC8 Transfer Clutch (.159")(15 Teeth)(4.110"ID) 1987-Up 1
23159E ..... Use 23158B 1

PART #	VALVE BODY KITS	QTY.	REFERENCE #
T73165A	Shift Kit, EC8 Subaru 4 Speed Electronic (Transgo)	1	SK® RE4R01A
A23165E	Valve Body Kit, EC8 (Subaru) 1998-07 (Trancel)	1	
A23169E	Valve Body Kit, EC8 (Subaru) Heavy Duty 1998-07 (Transcel)	1	

PART #	OIL SEALING RINGS	QTY	REFERENCE #
23175T	Ring Kit, EC8 (Teflon) 1987-98	1	
23175ET	Ring Kit, EC8 (Teflon) 1999-Up	1	

PART #	WASHERS & BEARINGS	QTY.	REFERENCE #
93211	Washer, EC8 Stator To Reverse Drum (.028") (Plastic) 1987-98	1	31528-21X01
93211A	Washer, EC8 Stator To Reverse Drum (.035") (Plastic) 1987-98	1	31528-21X01
93211B	Washer, EC8 Stator To Reverse Drum (.043") (Plastic) 1987-98	1	31528-21X02
93211C	Washer, EC8 Stator To Reverse Drum (.051") (Plastic) 1987-98	1	31528-21X03
93211D	Washer, EC8 Stator To Reverse Drum (.059") (Plastic) 1987-98	1	31528-21X04
93211E	Washer, EC8 Stator To Reverse Drum (.067") (Plastic) 1987-98	1	31528-21X05
93211F	Washer, EC8 Stator To Reverse Drum (.075") (Plastic) 1987-98	1	31528-21X06
23220	Bearing W/Race, EC8 Stator To High Drum (1.840"OD) 1987-98	1	
23220E	Bearing W/Races, EC8 Stator To high/Overrun Drum (1.880"OD) 1999-Up	1	
23221	Race, EC8 Stator To High Drum (.051" Thick)(1.710"OD)(1.235"ID)(3 Tabs) 1987-98	1	
23229	Bearing W/Races, EC8 High Drum To High Hub (.091" Thick)(2.080"OD)(1.500"ID) 1987-98	1	
23229A	Bearing W/Races, EC8 High Drum To High Hub (.125" Thick)(2.075"OD)(1.500"ID) 1987-98 (Also Fits EC8 High Hub To Shell #241 1987-98)	1-2	
73229A	Bearing W/Races, EC8 High Drum To High Hub (.150"Thick) 1987-98	1	
23229E	Bearing W/Races, EC8 High/Overrun Drum To Hub (.148"OD)(1.845"OD)(1.185"ID) 1999-Up	1	
23232	Bearing, EC8 Forward Clutch Drum To Rear Support 1987-98	1	
53232	Bearing W/Race, EC8 High Hub To Shell #241 (.110" Thick) 1978-98	1	
23235	Roller Cage Bearing, EC8 Forward Clutch Drum To Support (.415"Thick)(3.330"OD)(24 Needles) 1987-98	1	
23235E	Caged Needle Bearing, EC8 Low Clutch Drum To Support (.305" Thick)(3.330"OD)(48 Needles) 1999-Up	1	
23236	Washer, EC8 Under Front Pinion Nut (.114" Thick)(1.445"OD)(.890"ID) 1987-Up	1	
123237A	Spacer, EC8 Pinion Bearing #274 (Rear) To Nut (.700" Thick)(2.005"OD)(1.360"ID) 1999-Up	1	
23238	Bearing, EC8 Front Planet To Rear 1987-98	1	
73238	Bearing W/Races, EC8 Front Planet To Rear 1999-Up	1	
23241	Bearing, EC8 High Clutch Hub To Drive Shell 1987-98 (Use 23229)	1	
23241E	Bearing W/Races, EC8 High Hub With Hub With Sun Gear (.130" Thick)(2.785"OD)(2.000"ID) 1999-Up (Also Fits EC8 Hub With Sun Gear To Front Planet #244 1999-Up)	1	
23243	Race, EC8 Rear Planet To Ring Gear 1999-Up	1	
23244	Bearing W/Race, EC8 Shell To Front Planet 1987-98	1	
73244	Bearing W/Race, EC8 (Subaru) Rear Planet To Ring Gear (.111" Thick)(3.065"OD)(2.295"ID) 1999-Up	1	
23244A	Bearing W/Races, EC8 Shell To Front Planet (.157"Thick)(3.065"OD)(2.310"ID) 1987-98 (Also Fits EC8 Rear Planet To Rear Ring Gear #244 1987-98)	1-2	
23247	Bearing, EC8 Rear Sun Gear To Rear Planet 1987-98	1	
23247E	Bearing, EC8 Rear Sun Gear To Rear Planet (Stays in Planet) 1999-Up	1	
73254	Washer, EC8 Rear Planet Ring Gear To Clutch Hub (Plastic) 1987-98	1	31508-41X00
23256	Washer, EC8 Under Driven Transfer Gear Nut (Pinion Shaft) 1987-Up	1	
23259E	Race, EC8 Rear Hub To Bearing # 260 (3 Tabs & 3 Ears) 1999-Up	1	
73260A	Bearing W/Races, EC8 Rear Hub To Rear Support 1987-98	1	31407-41X11
23260E	Bearing W/Race, EC8 Rear Hub To Rear Support 1999-Up (Uses A 3 Tab Race #259E)	1	
23261A	Caged Needle Bearing, EC Rear Support (Inner)(.710" Wide)(1.655"OD)(17 Needles) (Cast # NTN 7E-HMK 3220) 1987-98	1	
23261E	Caged Needle Bearing, EC8 Rear Support (Inner)(.565" Wide)(1.590"OD)(18 Needles) (Cast # NTN 7E-HKS 32X41X15.5 PXI) 1999-Up	1	
23263	Ball Bearing, EC8 Drive Transfer Gear 1987-98	1	

© Whatever It Takes Transmission Parts. Inc.

PART #	WASHERS & BEARINGS	QTY.	REFERENCE #
M308211A	Ball Bearing, EC8 Drive Transfer Gear 1999-Up (Narrow Single Roll Ball Bearing) Cast # 6010-N	1	
23268	Caged Needle Bearing, EC8 Output Shaft To Transfer Drum (1.015” Wide)(1.410”OD) (18 Needles) 1987-Up	1	
23271	Ball Bearing, EC8 Output Shaft To Extension Housing (3.340”OD) 1987-98	1	
23271E	Ball Bearing, EC8 Output Shaft To Extension Housing (3.150”OD) 1999-Up (Also Fits Driven Transfer Gear)	1-2	
23272	Shim, EC8 Gear # 271 To Extension Housing (.005”) 1987-98	1	
23274	Cone Bearing, EC8 Pinion To Retainer (17 Roller)(.747” Thick)(1.615”ID) (Cast # KOYO T0808048-2) 1987-Up	2	
23277	Shim, EC8 Retainer To Pump Housing (Selective)(4 Bolt Holes) 1987-Up	1	
23279	Bearing, EC8 Drive Gear To Transfer Clutch Drum 1987-Up	1	
23281	Ball Bearing, EC8 Driven Transfer Gear 1987-98	2	
23281E	Ball Bearing, EC8 Driven Transfer Gear (Use 23271E) 1999-Up	1	
23286	Washer, EC8 Low Sprag (.039”Thick)(3.860”OD)(3.128”ID) 1987-Up	1	
23291A	Cup Race, EC8 Differential Housing To Bearing Retainer (.628” Thick)(3.150”OD)(2.608”ID) (Cast # KOYO 30208J-N) 1987-Up (Also Fits EC8 Race #288 1987-Up)	1-2	
23292A	Cone Bearing, EC8 Differential Housing To Retainer (17 Rollers)(1.575”ID) (Cast # KOYO 30208JR) 1987-Up (Also Fits EC8 Bearing #289 1987-Up)	1-2	

PART #	GASKETS & RUBBER COMPONENTS	QTY.	REFERENCE #
23300	Gasket, EC8 Bottom Pan (1987-91 & 1990-92 Legacy)	1	31397AA040
23300A	Gasket, EC8 Bottom Pan (1992-98 SVX) (1993-98 Legacy, Impreza)	1	31397AA041
23300E	Gasket, EC8 Bottom Pan 1999-Up	1	
23305A	Gasket, EC8 Extension Housing (Paper) 1987-6/1998	1	
23305EA	Gasket, EC8 Extension Housing (Metal) 1998-14	1	

SUBARU

PART #	TECHNICAL MANUALS	QTY.	REFERENCE #
23400	Technical Manual, EC8 (4 Speed Subaru) 1987-98	1	83-SUBA4TM

PART #	ELECTRICAL COMPONENTS	QTY.	REFERENCE #
23410	Switch, EC8 Neutral Safety 1987-98	1	
23410E	Switch, EC8 Neutral Safety 1999-Up	1	
23420A	Solenoid Assembly, EC8 (4 Solenoid) 1987-98	1	
23421E	Solenoid, EC8 Shift #1 (Green Connector) 1999-Up	1	
23422E	Solenoid, EC8 Shift #2 (Yellow Connector) 1999-Up	1	
23423E	Solenoid, EC8 EPC 2-4 Brake Duty (Black Connector) 1999-Up	1	
23425A	Solenoid, EC8 Lock-Up 1987-98	1	
23425E	Solenoid, EC8 Lock-Up (TCC)(Blue Connector) 1999-7/04	1	
23426E	Solenoid, EC8 Low Clutch Timing (Gray Connector) 1999-Up	1	
23431E	Solenoid, EC8 EPC (Red Connector) 1999-04 (Also Fits EC8 2-4 Brake Duty With Red Connector 1999-04)	1-2	
23432	Solenoid, EC8 Duty (Transfer Case Clutch)(With 1 O-Ring On The Solenoid Snout) 1993-Up	1	
23432E	Solenoid, EC8 Duty (Transfer Case Clutch)(With 2 O-Rings On The Solenoid Snout) (Comes With #744 Also)(On Rear Of Case) 2003-06	1	
23432EA	Solenoid, EC8 Duty (Transfer Case Clutch)(On Valve Body) 2004-09 (This Solenoid Was Moved From The Rear Of The Case To The Valve Body #428 On Some 2004-Up)	1	
23436	Sensor, EC8 Speed 1987-98	1	
23446	Wire Harness, EC8 Internal (13 Prong Case Connector) 1987-98	1	
23446E	Wire Harness, EC8 Internal (17 Prong Case Connector) 1999-Up	1	
23493-1A	Dipstick, EC8 (In Bell Housing)(9 5/8” Overall Length) 1987-Up	1	

PART #	HARD PARTS	QTY.	REFERENCE #
23511	Housing, EC8 Pump (Case Cover) Less Rotor Kit 1987-98	1	
23511E	Housing, EC8 Pump (Case Cover) Less Pump Gears 1999-Up	1	
23520	Stator, EC8 Pump Support (2 Bushing Type) (10 Bolt) 1987-98	1	
23520A	Stator, EC8 Pump Support (3 Bushing Type) (10 Bolt) 1987-98	1	
23520E	Stator, EC8 Pump Support (8 Bolt) 1999-Up	1	

PART #	PUMP COMPONENTS	QTY.	REFERENCE #
23530E	Gear Set, EC8 Pump (With Milled Flat Inner Gear) 1999-Up	1	
23531	Rotor Kit, EC8 Pump (Vanes, Rotor, Rings, Spring, Slide) 1987-98	1	

© Whatever It Takes Transmission Parts. Inc.

PART #	HARD PARTS (Continued)	QTY.	REFERENCE #
23554	Drum, EC8 Forward Clutch With Hub 1987-98	1	
23554E	Drum, EC8 Low Clutch With Hub 1999-Up	1	
93555	Drum, EC8 High Clutch (27 Teeth Steels) 3-5 Clutch (5 3/4"OD) 34 Teeth Reverse Hub 1987-98	1	31541-21X05
93555B	Drum, EC8 High Clutch (24 Teeth Steels) 38 Teeth Reverse Clutch Hub 1995-98	1	
23555E	Drum, EC8 High/Overrun Clutch (32 Teeth Steels) 1999-Up	1	
73556	Drum, EC8 Reverse Clutch (6 5/8"OD) 2 Clutch 1987-98	1	
23558	Drum, EC8 Transfer Clutch (5 Clutch) (Retainer Has No Seal) 1987-89	1	
23558A	Drum, EC8 Transfer Clutch (6 Clutch) (Retainer Has Molded Rubber) 1990-98	1	
23558E	Drum, EC8 Transfer Clutch (6 Clutch) 1999-Up	1	
23562E	Piston Kit, EC8 2nd & 4th Brake Clutch 1999-Up	1	
73564	Piston Kit, EC8 Forward Clutch 1987-98	1	
23564E	Piston Kit, EC8 Low Clutch 1999-Up	1	
23565	Piston Kit, EC8 High Clutch 1987-98	1	
73565	Piston Kit, EC8 High Clutch 1987-98	1	
93565B	Piston Kit, EC8 High Clutch 1987-98	1	
23565E	Piston Kit, EC8 High/Overrun Clutch 1999-Up	1	
23566	Piston Kit, EC8 Reverse Clutch 1987-Up	1	
23567	Piston Kit, EC8 Low/Reverse Clutch 1987-98	1	
23567E	Piston Kit, EC8 Low/Reverse Clutch 1999-Up	1	
23568	Piston Kit, EC8 Transfer Clutch 1987-98	1	
23568E	Piston Kit, EC8 Transfer Clutch 1999-Up	1	
23574	Clutch Hub, EC8 Forward Clutch (36 Clutch Splines)(With Outer Sprag Race) 1987-98	1	
23575A	Clutch Hub, EC8 High Clutch (30 Teeth Clutch Hub) 1987-98 (Uses A .125" Thick Bearing #229)	1	
93575A	Clutch Hub, EC8 High Clutch (Cast Iron) Wide Teeth (Uses A .150" Thick Bearing # 229)1987-98	1	
23575E	Clutch Hub, EC8 High Clutch (36 Teeth Clutch Hub) 1999-Up	1	
73579	Clutch Hub, EC8 Overrun Clutch (4 5/8"OD) 1987-98	1	
23582	Planet, EC8 Front (27 Outer Lugs) 1987-98 (Use 73583B)	1	
23582E	Planet, EC8 Front (24 Outer Lugs) 1999-Up	1	
73583B	Planet Kit, EC8 (Front & Rear) (Contains #622 To # 594) 42 Teeth Rear Sun Gear With 4 Notches (Shell Has 33 Teeth, 1.885"OD, 8 Lugs) 1987-98 (Bushing #052 Left Out For Added Lube)	1	
23583E	Planet Kit, EC8 (37 Teeth Rear Sun Gear) (Contains: #612 To #594) 1999-Up	1	
23583EA	Planet KIt, EC8 (42 Teeth Rear Sun Gear) (Contains: #612 To #594) 1999-Up	1	
23584	Planet, EC8 Rear 1987-98 (Can Use 73583B)	1	
23584E	Planet, EC8 Rear (37 Teeth Rear Sun Gear) 1999-Up (Can Use 23583E)	1	
23594	Ring Gear, EC8 Rear Planet (2.480"OD Sprag Race On Rear) 1987-98	1	
23594E	Ring Gear, EC8 Rear Planet (30 Outer Lugs) 1999-Up	1	
23612E	Sun Gear W/Hub, EC8 Front Planet (33 Teeth Sun Gear) 1999-Up	1	
23614	Sun Gear, EC8 Rear 1987-89	1	
23614E	Sun Gear, EC8 Rear (With 6 Notches On Front Side) 37 Teeth 1999-Up	1	
23622	Shell, EC8 With Sun Gear (33 Teeth Sun Gear) 1987-98	1	

PART #	SPRAGS & ONE WAY CLUTCHES	QTY.	REFERENCE #
73656	Sprag, EC8 3rd Clutch (28 Elements)	1	
23658	Sprag, EC8 Low (34 Elements)(.404" Wide Elements) 1987-Up	1	
73658A	Sprag, EC8 Low Sprag (30 Elements)(.406" Wide Elements) 1987-Up	1	
23668	Inner Race, EC8 Rear Support (Sprag Race)(4 Rings) 1987-98	1	
23668E	Inner Race, EC8 Rear Support (Sprag Race)(2 Rings) 1999-Up	1	

PART #	HARD PARTS (Continued)	QTY.	REFERENCE #
23670	Input Shaft, EC8 (Between Rear Splines Oil Holes Are 1.155" Apart) 1987-98	1	
23670E	Input Shaft, EC8 (Between Rear Splines Oil Holes Are .870" Apart) 1999-Up	1	
23671	Pump Shaft Hub, EC8 (2 Slots For Inner Pump Gear) 1987-98	1	
23671E	Pump Shaft Hub, EC8 (2 Flats For Inner Pump Gear) 1999-Up	1	
23677	Shaft, EC8 Axle 1987-98	2	
23677E	Shaft, EC8 Axle (4 7/8" Long)(25 Splines Both Ends) 1999-Up	2	
23710AAK	Gear, EC8 Reduction Drive (47 Teeth With Shaft) 4x4 1987-98	1	
23710AK	Gear, EC8 Reduction Drive (53 Teeth With Shaft) 4x4 1987-98	1	
23710EK	Gear, EC8 Reduction Drive (53 Teeth With Shaft) 4x4 1999-Up	1	
23710FK	Gear, EC8 Reduction Drive (47 Teeth With Shaft) 2WD 1987-98	1	
23710K	Gear, EC8 Reduction Drive (53 Teeth With Shaft) 2WD 1987-98	1	
23712	Gear, EC8 Driven Transfer (47 Teeth) 1987-98	1	
23712C	Gear, EC8 Driven Transfer (53 Teeth) 1987-98	1	
23712E	Gear, EC8 Driven Transfer (53 Teeth) 1999-Up	1	

© Whatever It Takes Transmission Parts. Inc.

PART #	HARD PARTS (Continued)	QTY.	REFERENCE #
23715	Differential, EC8 (37 Teeth) 1987-98	1	
23715A	Differential EC8 (39 Teeth) 1987-98	1	
23715E	Differential, EC8 (37 Teeth) 1999-Up	1	
23715EA	Differential, EC8 (38 Teeth) 1999-Up	1	
23715EC	Differential, EC8 (40 Teeth) 1999-Up	1	
23725	Retainer, EC8 Differential Bearing (Both Sides) 1987-98	2	
23725E	Retainer, EC8 Differential Bearing (Drivers Side) 1999-Up	1	
23725EA	Retainer, EC8 Differential Bearing (Passengers Side) Adjuster 1999-Up	1	
23727	Clips, EC8 Holds Differential Retainer In Place 1987-98	2	
23727E	Clips, EC8 Holds Differential Retainer In Place 1999-Up	2	
23730	Pinion Shaft, EC8 (9 Teeth) 1987-98	1	
23730A	Pinion Shaft, EC8 (10 Teeth) 1987-98	1	
23730E	Pinion Shaft, EC8 (9 Teeth) Fits A 37 Teeth Ring Gear 1999-Up	1	
23730EA	Pinion Shaft, EC8 (9 Teeth) Fits A 38 Teeth Ring Gear 1999-Up	1	
23730EC	Pinion Shaft, EC8 (9 Teeth) Fits A 40 Teeth Ring Gear 1999-Up	1	
23735	Retainer, EC8 Pinion (4 Bolt, Cast Iron)(1.335"Thick)(With Cup Races # 273 Built Into Retainer) 1987-Up	1	
23736	Retainer, EC8 Pinion Seal (3 Bolt, Aluminum) 1987-Up	1	
23740	Valve Body, EC8 (5 Solenoids) With Tubes 1987-98	1	
23740E	Valve Body, EC8 (7 Solenoids) (Cast # 214074) 1999-Up	1	
23740EA	Valve Body, EC8 (7 Solenoids) (Cast # 214087) 1999-Up (Uses 7 Solenoids, But Has An Extra Solenoid Hole, But Has No Solenoid In It)	1	
23740EB	Valve Body, EC8 (8 Solenoids) (Cast # 214087) 1999-Up	1	
23744E	Duty Valve Assembly, EC8 (Bolts To Rear Of Case) 1999-Up	1	
23750	Bell Housing, EC8 (4 Bolt Holes To Engine)(With Push In Dipstick) 1987-98	1	
23750A	Bell Housing, EC8 (4 Bolts To Engine)(With Screw In Dipstick) 1987-98	1	
23750E	Bell Housing, EC8 (8 Bolts To Engine)(With Speed-O Hole) 1999-Up	1	
23750EA	Bell Housing, EC8 (8 Bolts To Engine)(No Speed-O Hole) 1999-Up	1	
23760	Case, EC8 (15 1/8" Long)(Has A Servo In The Case) 1987-98	1	
23760E	Case, EC8 (13 1/4" Long)(No Servo)(Has A Screw On External Filter) 1999-Up	1	
23765	Pan, EC8 (1987-92 Coupe, Sedan, Wagon, Loyale, XT,XT6)	1	
23765A	Pan, EC8 (1990-98 Legacy, SVX, Impreza)	1	
23765E	Pan, EC8 1999-Up	1	
23770	Extension Housing, EC8 4x4 (XT, XT6, Loyale) 1988-92	1	
23770A	Extension Housing, EC8 4x4 (Legacy, SVX, Impreza) 1990-98	1	
23770B	Extension Housing, EC8 2WD (Rear Cover) 1987-98	1	
23770E	Extension Housing, EC8 4x4 (1 1/8" From Gasket To Speed-O) 1999-Up	1	
23770EA	Extension Housing, EC8 4x4 (4 3/8" From Gasket To Speed-O) 1999-Up	1	
23774E	Speed-O Housing, EC8 (Aluminum, Screw In)(With Plastic 2 Prong Connector) 1999-Up	1	
23778EK	Bolt Set, EC8 Stator To Pump Housing 1998-Up	1	
23778K	Bolt Set, EC8 Stator To Pump Housing 1987-98	1	
23781K	Bolt Set, EC8 Extension Housing To Case 1987-98	1	
23787K	Bolt Set, EC8 Holds #736 To #511 (3 Per Set) 1987-Up	1	
23790K	Bolt Set, EC8 Case To Rear Support 1987-98	1	
23796	Nut, EC8 Driven Transfer Gear To Pinion (35mm Head) 1987-Up	1	
23797A	Nut, EC8 Holds Collar To Pinion Shaft (38mm Head) 1987-Up	1	
23847A	Speed-O Gear, EC8 Drive (25 Teeth)(Green) 1987-Up	1	
23853	Cushion Spring, EC8 Forward Clutch (.060" Thick)(5.895"OD)(5.395"ID) 1987-98	1	
23853E	Cushion Spring, EC8 Low Clutch (.045" Thick)(5.480"OD)(4.935"ID) 1999-Up	1	
73854	Cushion Spring, EC8 (Subaru) Reverse Clutch 1987-Up	1	
23856	Cushion Spring, EC8 Overrun Clutch (.063" Thick)(5.335"OD) 1987-98	1	
23856E	Cushion Spring, EC8 Overrun Clutch (.057" Thick)(5.960"OD) 1999-Up	1	
23857	Cushion Spring, EC8 Low/Reverse Clutch (.090" Thick)(Beveled) 1987-98	2	
23857A	Cushion Spring, EC8 Low/Reverse Clutch (.380" Thick)(Spiral) 1987-98	1	
23857E	Cushion Spring, EC8 Low/Reverse Clutch (.070" Thick)(Beveled) 1999-Up	1	
123862A	Snap Ring, EC8 (Subaru) Pump Drive Tube (Front) 1987-Up	1	
23864E	Snap Ring, EC8 Holds 2nd/4th Brake Clutch Pressure Plate In Case (.079" Thick)(7" OD) 1999-Up (Also Fits EC8 Holds 2nd/4th Brake Clutch Retainer In #874 1999-Up)	1-2	
73870	Snap Ring, EC8 (Subaru) Holds Overrun Pressure Plate In Drum (.079" Thick)(5.615"OD) 1987-98	1	
23870E	Snap Ring, EC8 Holds Overrun Pressure Plate In Drum 1999-Up	1	
23871	Snap Ring, EC8 Holds Transfer Clutch Retainer In 1987-Up	1	
23873	Snap Ring, EC8 Holds Transfer Clutch Pressure Plate In 1987-Up	1	
23874E	Use 23864E	1	
73876	Snap Ring, EC8 Holds Forward Pressure Plate In Drum 1987-98	1	
23876E	Snap Ring, EC8 Holds Low Clutch Pressure Plate In Drum (.079" Thick)(5.775"OD) 1999-Up	1	
73877	Snap Ring, EC8 Holds Forward Clutch Retainer In Drum (.039"Thick)(2.960"OD) 1987-98	1	
23877E	Snap Ring, EC8 Holds Low Clutch Retainer In (.063" Thick)(2.700"OD) 1999-Up	1	

SUBARU

© Whatever It Takes Transmission Parts. Inc.

93878.....Snap Ring, EC8 Holds High Clutch Pressure Plate In Drum (.078" Thick) Flat (5 9/16"OD)
.....1987-98 (For Drum With 27 Teeth Steels).....1
23878E.....Snap Ring, EC8 Holds High Clutch Pressure Plate In Drum 1999-Up (1st Set From Pump)
.....In High/Overrun Drum (.080" Thick)(5.760"OD) 1
23879.....Snap Ring, EC8 Holds High Clutch Retainer In (.038" Thick)(2.320"OD) 1987-98.....1
23879E.....Snap Ring, EC8 Holds High/Overrun Retainer In (.065" Thick)(1.890"OD) 1999-Up 1
73881.....Snap Ring, EC8 Holds Front Sprag In Forward Hub (.042" Thick)(3.325"OD) 1987-98 2
23882E.....Snap Ring, EC8 Holds Front Planet In Low Drum (.063" Thick)(5.950"OD) 1999-Up 1
23883.....Snap Ring, EC8 Holds Front Planet To Forward Drum (.079" Thick)(6 3/16"OD) 1987-98.....1
73885.....Snap Ring, EC8 Holds Low/Reverse Pressure Plate In Case (.080" Thick)(6.165"OD) 1987-Up ..1
73890.....Snap Ring, EC8 Holds Low Sprag In Forward Drum (.039"Thick)(4.100"OD) 1987-Up 2
93892.....Snap Ring, EC8 Holds Pressure Plate In Reverse Drum 1987-98 1
93893.....Snap Ring, EC8 (Subaru) Holds Reverse Clutch Retainer In Reverse Drum 1987-Up 1
23895.....Snap Ring, EC8 Holds Drive Gear To Shaft (2 WD) 1987-Up 1
23895A.....Snap Ring, EC8 Holds Drive Gear To Shaft (4x4) 1987-Up.....1
23899E.....Snap Ring, EC8 Holds Bearing #281 To Driven Transfer Gear #712 (.070" Thick)(1.742"OD)
.....(With 2 Eyelets) 1999-Up 1
23900.....Servo Assembly, EC8 Overdrive Band 1987-98 1
23918.....Bolt, EC8 Band Adjusting 1987-98.....1
23925.....Accumulator Assembly, EC8 1987-98.....1
23956E.....Housing, EC8 2nd & 4th Brake Clutch Piston (Tin) 1999-Up.....1
23962E.....Piston, EC8 2nd & 4th Brake Clutch 1999-Up 1
73964.....Piston, EC8 Forward Clutch 1987-98.....1
23964E.....Piston, EC8 Low Clutch 1999-Up.....1
23965.....Piston, EC8 High Clutch (4.885"OD) 1987-98 1
23965E.....Piston, EC8 High Clutch (5.440"OD) 1999-Up.....1
23966.....Piston, EC8 Reverse Clutch 1987-98 1
23967.....Piston, EC8 Low/Reverse Clutch (Aluminum) 1987-98 1
23967E.....Piston, EC8 Low/Reverse Clutch 1999-Up 1
23967EA.....Piston, EC8 Low/Reverse Clutch (Bonded) 1999-Up (.722" Deep)("5" Stamped In Piston)
.....(Fits 2.2L Engine).....1
23967EB.....Piston, EC8 Low/Reverse Clutch (Bonded) 1999-Up (.567" Deep) ("6" Stamped In Piston)
.....(Fits 2.5L Engine).....1
23967EC.....Piston, EC8 Low/Reverse Clutch (Bonded) 1999-Up (.457" Deep)("7" Stamped In Piston)
.....(Fits 3.0L Engine).....1
23968.....Piston, EC8 Transfer Clutch 1987-98.....1
23968E.....Piston, EC8 Transfer Clutch (Outer, Bonded) 1999-Up 1
23968E-1.....Piston, EC8 Transfer Clutch (Inner, Bonded) 1999-Up 1
73969.....Piston, EC8 Overrun Clutch (In Forward Drum) 1987-98 1
23969E.....Piston, EC8 Overrun Clutch (In High/Overrun Drum) 1999-Up.....1
23972E.....Spring W/Retainer, EC8 2nd & 4th Brake Clutch Return 1999-Up 1
73974.....Spring, EC8 Forward Clutch Return (4.265"OD)(2.840"ID) 1987-98 1
23974E.....Spring W/Retainer, EC8 Low Clutch Return (4.430"OD)(3.495"ID) 1999-Up 1
23975.....Spring, EC8 High Clutch Return 1987-98 1
23975E.....Spring W/Retainer, EC8 High/Overrun Clutch Return 1999-Up.....1
23976.....Spring, EC8 Reverse Clutch Return 1987-98 1
23977.....Spring, EC8 Low/Reverse Clutch Return 1987-98.....1
23977E.....Spring, EC8 Low/Reverse Clutch Return (Spiral) 1999-Up 1
23978.....Retainer W/Spring, EC8 Transfer Clutch 1987-98 1
23978E.....Spring, EC8 Transfer Clutch (Spiral) 1999-Up.....1
23983.....Snap Ring, EC8 Holds Reverse Clutch Retainer In 1987-98.....1
73984.....Retainer, EC8 Forward Clutch Spring 1987-98.....1
23984E.....Piston/Retainer, EC8 Low Clutch Spring Retainer (Bonded) 1999-Up 1
23985.....Retainer, EC8 High Clutch Spring 1987-98.....1
23985E.....Piston/Retainer, EC8 High/Overrun Clutch (Bonded) 1999-Up.....1
23986.....Retainer, EC8 Reverse Clutch Spring 1987-98.....1
23987.....Retainer, EC8 Low/Reverse Clutch Spring (4.325"OD) 1987-98 1
23987E.....Retainer, EC8 Low/Reverse Clutch Spring (4.235"OD) 1999-Up 1
23991.....Linkage Assembly, EC8 Internal 1987-98 1
23991E.....Linkage Assembly, EC8 Internal 1999-Up.....1
23995.....Park Pawl Assembly, EC8 1987-98.....1
23995E.....Park Pawl Assembly, EC8 1999-Up 1
23999.....Tube Set, EC8 (2WD) 1987-98 1
23999A.....Tube Set, EC8 (4x4) 1987-98 1
23999E.....Tube, EC8 Oil 1999-Up.....1

© Whatever It Takes Transmission Parts. Inc.

002
OHK Kit

011
Filter Kit

400
Tech Manual

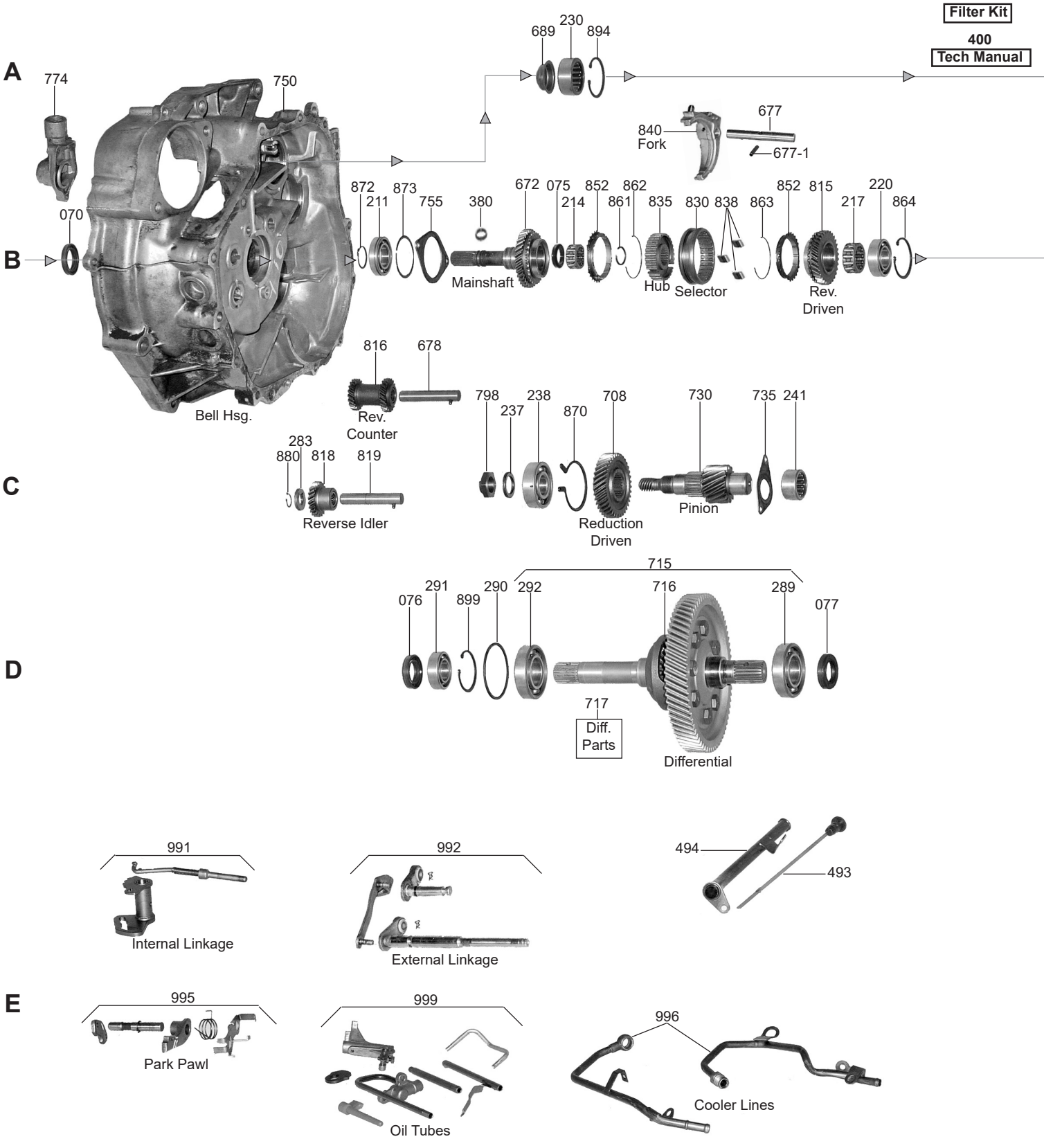

SUBARU

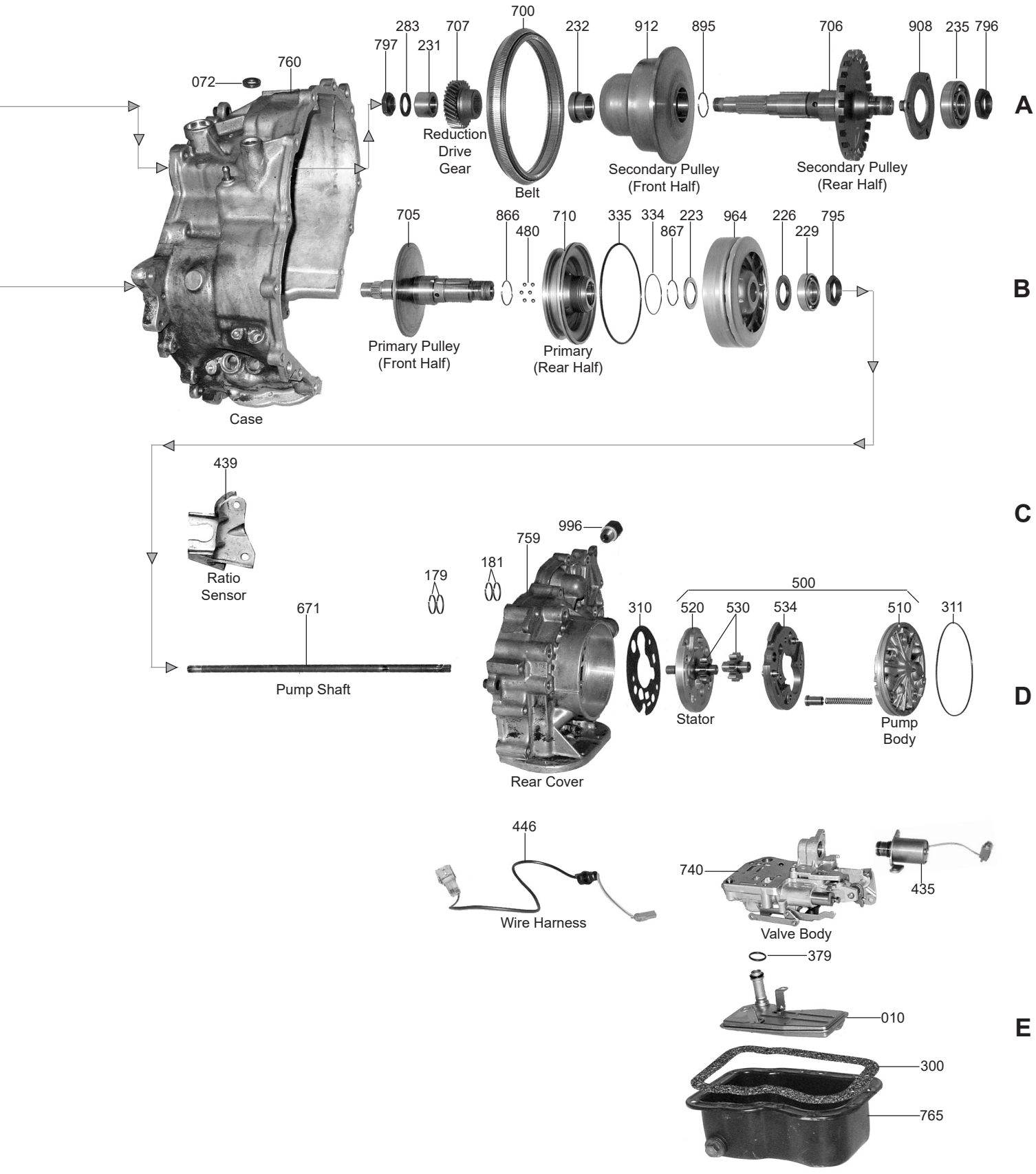

© Whatever It Takes Transmission Parts. Inc.

PART #	OVERHAUL KITS	QTY.	REFERENCE #
133002A	Overhaul Kit, ECVT (Subaru, Justy) 1989-94	1	

PART #	FILTER	QTY.	REFERENCE #
133010A	Filter, ECVT (Subaru, Justy) 1989-94	1	

PART #	FILTER KIT	QTY.	REFERENCE #
133011A	Filter Kit, ECVT (Subaru, Justy) 1989-94	1	

PART #	METAL CLAD SEALS	QTY.	REFERENCE #
133070A	Seal, ECVT Front	1	
133072A	Seal, ECVT Manual Shaft	1	
133073A	Seal, ECVT Shift Lever	1	
133077A	Seal, ECVT Axle (Right Side) (With Left spiral)	1	
133077A	Seal, ECVT Axle (Left Side) (With Right Spiral)	1	
133078A	Seal, ECVT Speed-O Shaft	1	

PART #	WASHERS & BEARINGS	QTY.	REFERENCE #
133214A	Roller Bearing, ECVT (Mainshaft) Front	1	
133217A	Roller Bearing, ECVT Inside Reverse Driven Gear	1	
133220A	Ball Bearing, ECVT Reverse Driven Gear To Rear Cover	1	
133223A	Washer, ECVT Mainshaft To Drive Housing	1	
133226A	Washer, ECVT Drive Pulley To Ball Bearing	1	
133229A	Ball Bearing, ECVT Mainshaft (Rear)	1	
133231A	Race, ECVT Inner Countershaft (Front)	1	
133233A	Washer, ECVT Countershaft To Rear Roller Bearing	1	
133234A	Needle Bearing, ECVT Countershaft To Case Front	1	
133235A	Ball Bearing, ECVT Countershaft Rear To Case	1	
133237A	Washer, ECVT Nut To Differential Idler	1	
133238A	Ball Bearing, ECVT Idler Shaft (Front) Differential Idler	1	
133241A	Needle Bearing, ECVT (Rear) Differential Idler Shaft	1	
133283A	Roller Bearing, ECVT Reverse Idler Gear To Shaft	1	
133289A	Ball Bearing, ECVT Differential Ring Gear Side	1	
133290A	Washer, ECVT Differential Housing To Bearing	1	
133292A	Ball Bearing, ECVT Differential	1	

PART #	GASKETS & RUBBER COMPONENTS	QTY.	REFERENCE #
133300A	Gasket, ECVT Pan (Cork)	1	

PART #	TECHNICAL MANUALS	QTY.	REFERENCE #
133400A	Technical Manual, ECVT Belt Drive Subaru (Justy)	1	

PART #	HARD PARTS	QTY.	REFERENCE #
133500A	Pump Complete, ECVT	1	
133671A	Pump Shaft, ECVT Dribe (12 Splines On One End, 13 Splines On The Other End)	1	
133672A	Main Shaft, ECVT With Forward Drive Gear (33 Teeth)	1	
133677A	Shaft, ECVT Shift Fork	1	
133678A	Shaft, ECVT Reverse Counter Gear	1	
133700A	Belt Drive, ECVT (25 1/2” Circumference)	1	
133700B	Belt Drive, ECVT (28” Circumference)	1	
133705A	Primary Pulley, ECVT (Front Half) 7 1/8” Long (5 3/8”OD With Bearing)	1	
133705B	Primary Pulley, ECVT (Front Half) 8 1/2” Long (6 1/4”OD Without Bearing)	1	
133706A	Countershaft, ECVT With Rear Driven Pulley Half	1	
133707A	Gear, ECVT Output Countershaft (29 Teeth)	1	
133707B	Gear, ECVT Output Countershaft (28 Teeth)	1	
133708A	Gear, ECVT Differential Idler (37 Teeth)	1	
133708B	Gear, ECVT Differential Idler (38 Teeth)	1	
133710A	Drive Pulley, ECVT Rear Half	1	
133715A	Differential Assembly, ECVT (70 Teeth) 2 Groove	1	
133730A	Pinion, ECVT With Idler Shaft (15 Teeth With Speed-O Gear)	1	
133735A	Retainer, ECVT Bearing	1	
133740A	Valve Body, ECVT (2 WD)	1	

© Whatever It Takes Transmission Parts. Inc.

133750A	Bell Housing, ECVT (4x4) Front Case Half	1
133750B	Bell Housing, ECVT (2 WD) Front Case Half	1
133759A	Rear Cover, ECVT (Rear Case)	1
133760A	Case, ECVT Center Section (2 WD)	1
133760B	Case, ECVT Center Section (4x4)	1
133765A	Pan, ECVT	1
133774A	Housing, ECVT Driven Speed-O Gear	1
133795A	Nut, ECVT Mainshaft	1
133796A	Nut, ECVT Countershaft (Rear)	1
133797A	Nut, ECVT Countershaft (Front)	1
133798A	Nut, ECVT Idler (Differential Idler)	1
133815A	Gear, ECVT Reverse Driven (31 Teeth) Mainshaft	1
133816A	Gear, ECVT Reverse Cluster (19 Teeth & 20 Teeth)	1
133818A	Gear, ECVT Reverse Idler With Shaft (21 Teeth)	1
133819A	Shaft, ECVT Reverse Idler	1
133830A	Selector, ECVT Forward & Reverse	1
133835A	Hub, ECVT Selector	1
133836A	Synchronizer Ring, ECVT (Forward & Reverse)	1
133838A	Dog Assembly, ECVT With Rings	1
133840A	Shift Fork, ECVT Selector	1
133844A	Tube, ECVT Pilot	1
133861A	Snap Ring, ECVT Holds Selector Hub To Shaft	1
133862A	Snap Ring, ECVT Hub To Mainshaft	1
133863A	Snap Ring, ECVT Selector To Reverse Driven Gear	1
133864A	Snap Ring, ECVT Ball Bearing To Case	1
133866A	Snap Ring, ECVT Drive Pulley (Front)	1
133867A	Snap Ring, ECVT Drive Pulley (Rear)	1
133870A	Spacer, ECVT (Horse Shoe)	1
133880A	Snap Ring, ECVT Reverse Idler	1
133908A	Retainer, ECVT Bearing	1
133964A	Drive Pulley Housing, ECVT	1
133991A	Linkage Assembly, ECVT Internal	1
133992A	Linkage Assembly, ECVT External	1
133995A	Park Pawl Assembly, ECVT	1
133999A	Oil Tube Assembly, ECVT	1

© Whatever It Takes Transmission Parts. Inc.

002 Overhaul Kit

004 Master L/Steels Kit

006 Master W/Steels Kit

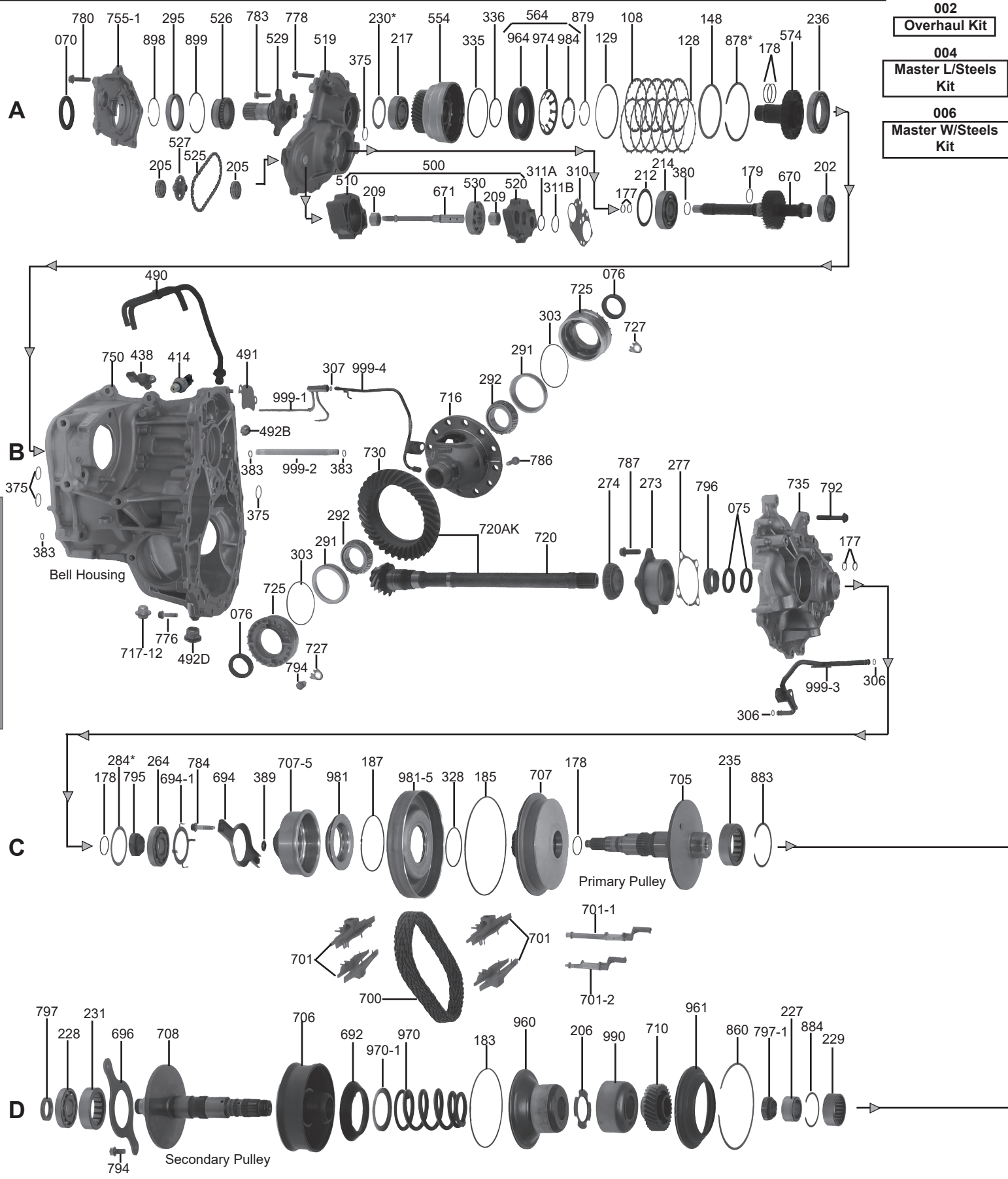

SUBARU

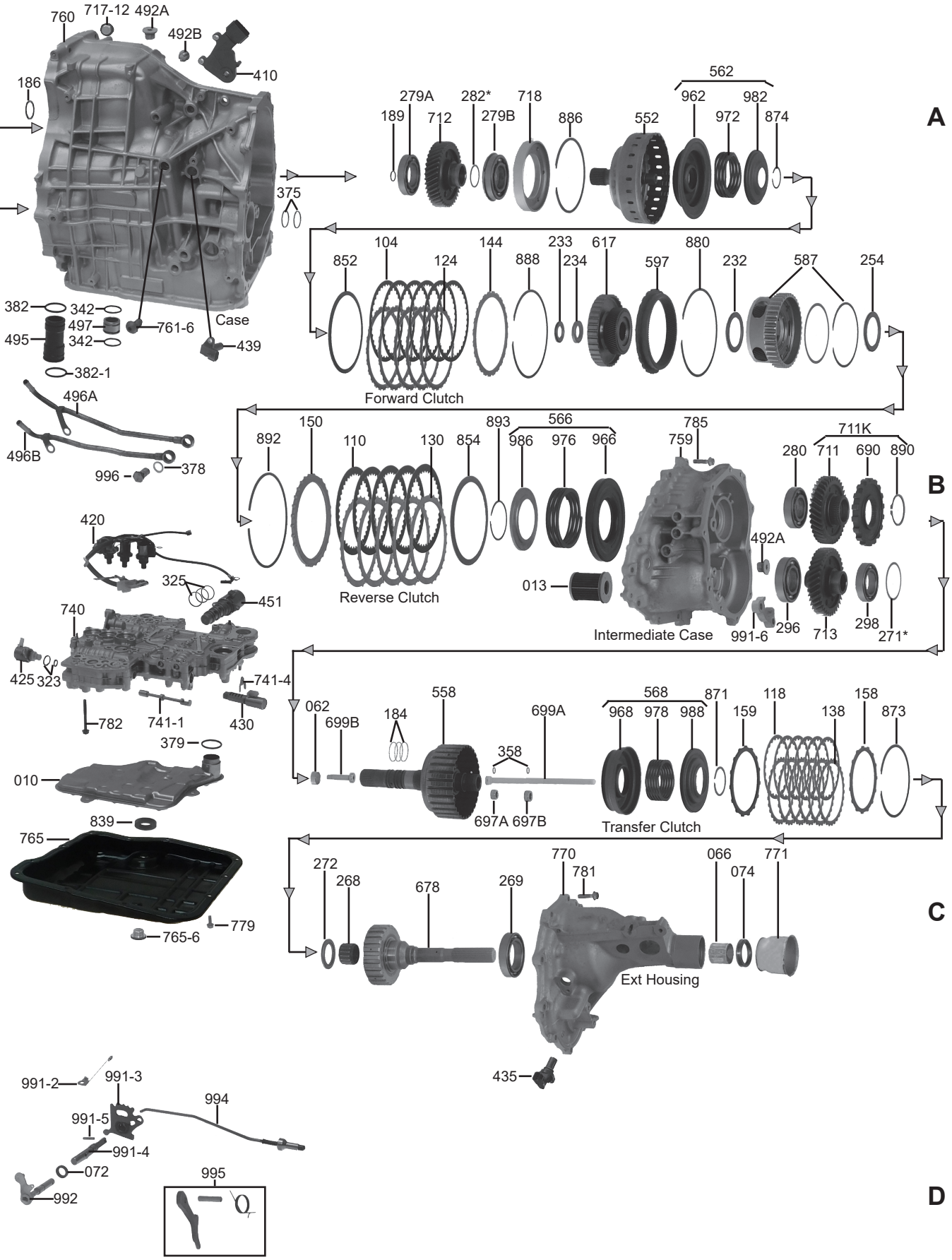

SUBARU

1-800-940-0197

© Whatever It Takes Transmission Parts. Inc.

PART #	OVERHAUL KITS	QTY	REFERENCE #
353002AF	Overhaul Kit, Subaru TR690 CVT 2009-Up W/Duraprene Pan Gasket	1	

PART #	MASTER LESS STEELS KITS	QTY	REFERENCE #
353004A	Master Kit Less Steels, Subaru TR690 CVT 2009-Up	1	

PART #	MASTER WITH STEELS KITS	QTY	REFERENCE #
353006A	Master Kit With Steels, Subaru TR690 CVT 2009-Up	1	

PART #	FILTERS	QTY	REFERENCE #
353010A	Filter, TR690 (3 Bolt)(Metal)(Oval Pick Up) 2009-Up	1	
353013A	Filter, TR690 Cooler In Case (2.365"Long) 2009-Up	1	

PART #	BUSHINGS	QTY	REFERENCE #
353062A	Bushing, TR690 Transfer Drum (Front)(Babbit)(.825"OD)(No Grooves) 2009-Up	1	
353066A	Bushing, TR690 (AWD) Ext Housing (Babbit)(1.385"ID)(1.580"Long) 2009-Up	1	

PART #	METAL CLAD SEALS	QTY	REFERENCE #
353070A	Seal, TR690 Front (2.580"OD) (1.820"ID)(.235"Thick)(Cast # NOK XH0882E) 2009-Up	1	
73072	Seal,TR690 Linkage Seal 2009-Up	1	
53074	Seal, TR690 Rear (1.375"ID)(Without Flange)	1	
353075A	Seal, TR690 Pinion (1.855"OD)(255"Thick) 2009-Up	2	
353076A	Axle Seal, TR690 Differential (1.350"ID)(CAST # NOK AH2058G) 2009-Up	2	

PART #	FRICTION CLUTCHS	QTY	REFERENCE #
353104A	Friction, TR690 Forward Clutch (36 Teeth)(5.655"OD) 2009-Up	6	
353108A	Steel, TR690 Input Clutch Internal Teeth 24T (.030"Thk)(4.035"OD) 2009-Up	5	
353110A	Friction, TR690 Reverse Clutch (40 Teeth)(.064"Thick)(6 1/8"OD) 2009-Up	5	
353118A	Friction, TR690 Transfer Clutch (24 Teeth)(4.645"OD)(.071"Thick) 2009-Up	6	

PART #	STEEL CLUTCHS	QTY	REFERENCE #
353124A	Steel, TR690 Forward Clutch (24 Teeth)(5.040"ID) 2009-Up	5	
353128A	Steel, TR690 INput Clutch External Teeth 16 Teeth (.030"Thick) 2009-Up	2	
353129A	Cushion, TR690 Input Clutch Beveled(.047"Thick)(4.075"OD)(.166"Wide) 2009-Up	1	
353130A	Steel, TR690 Reverse Clutch (25 Teeth)(.054"Thick)(5.235"ID) 2009-Up	5	
353138A	Steel, TR690 Transfer Clutch (30 Teeth)(4.110"ID)(.063"Thick) 2009-Up	6	

PART #	PRESSURE PLATES	QTY	REFERENCE #
353144A	Pressure Plate, TR690 Forward Clutch (5.040"ID)(24 Teeth) 2009-Up	1	
353148A	Pressure Plate, TR690 Input Clutch (4.080"OD)(.030"Thick)(No Teeth) 2009-Up	1	
353150A	Pressure Plate, TR690 Reverse Clutch (25 Teeth)(.227"Thick)(5.235"ID) 2009-Up	1	
353158A	Pressure Plate, TR690 Transfer (4.114"ID)(.128"Thick) 2009-Up	1	
353159A	Backing Plate, TR690 Transfer Clutch (15 Teeth)(.144"Thick)(4.114"ID) 2009-Up	1	

PART #	SEALING RINGS	QTY	REFERENCE #
353177A	Ring, TR690 Front Cover To Input Bearing (.625"OD)(.063"Thick)(Also Fits In Secondary Pulley To Pinion Retainer) 2009-Up	1	
353178A	Ring, TR690 Stator Tube (1.480"OD)(.074"Thick)(Stepped)(Double Lap Joint)(Also Fits TR690 Primary Pulley) 2009-Up	1	
353179A	Ring, TR690 Input Shaft To Converter Reactor (1.033"OD)(.074"Thick)(White)(Double Lap Joint) 2009-Up	1	
353183A	Ring, TR690 Secondary Apply Pulley Retainer (6.005"OD)(.086"Thick)(Double Lap Joint) 2009-Up	1	
353184A	Ring, TR690 Transfer Drum (1.365"OD)(.075"Thick)(White Plastic) 2009-Up	3	
353185A	Ring, TR690 Primary Pulley (7 1/2"OD)(.086"Thick)(Plastic)(Double Lap Joint)(.110"Wide) 2009-Up	1	
353186A	Ring, TR690 Primary In Case (.935"OD)(.080"Thick)(Stepped) 2009-Up	1	
353187A	Ring, TR690 Primary Pulley Piston Outer (4.100"OD)(.086"Thick) 2009-Up	1	
353189A	Ring, TR690 Rear Case To Under Ball Bearing (.695"OD)(.062"Thick) 2009-Up	1	

© Whatever It Takes Transmission Parts. Inc.

PART #	WASHERS & BEARINGS	QTY	REFERENCE #
353202A	Ball Bearing, TR690 Input Shaft To Bell Housing (9 Balls)(2.058"OD)(CAST # NACHI 6205) 2009-Up	1	
353205A	Caged Bearing, TR690 Bearing Pump To Drive Shaft(.984"OD)(.585"Thick)(NTN 17x25x15) 2009-Up	2	
353206A	Washer, TR690 Secondary Apply Pulley Retainer To Collar (1.830"ID)(.136"Thick) 2009-Up	1	
353209A	Needle Bearing, TR690 Pump Shaft (Front & Rear)(.985"OD)(.587"Thick)(13 Needles) 2009-Up	1	
353212A	Shim, TR690 Input Shaft Front Bearing To Front Cover (2.800"OD)(.047"Thick) 2009-Up	1	
353214A	Ball Bearing, TR690 Input Shaft Front (7 Balls)(2.835"OD)(.667"Thick)(CAST # KOYO 6306-3/28) 2009-Up	1	
353217A	Ball Bearing, TR690 Front Cover To Input Drum(9 Balls)(2.440"OD)(.627"Thick) (Cast # KOYO 6206) 2009-Up	1	
353227A	Inner Race, TR690 Secondary Apply Pulley (Front)(1.887"OD)(.902"Thick) 2009-Up	1	
353228A	Ball Bearing, TR690 Secondary Pulley (Front)(9 Balls)(2.990"OD)(.550"Thick) (Cast # NTN SC06D02CS12) 2009-Up	1	
353229A	Ball Bearing, TR690 Secondary Pulley To Case (21 Rollers)(2.440"OD)(.863"Wide) (Cast # KOYO RNA490BR-2) 2009-Up	1	
353230A	Shim, TR690 Front Cover To Input Bearing(2.412"OD)(.020"Thick) 2009-Up	1	
353231A	Roller Bearing, TR690 Secondary Pulley (Front)(15 Rollers)(3.150"OD)(.863"Thick) (Cast # NTN 2U09101421) (HL-BE-NK 49.5x80x22px3) 2009-Up	1	
353232A	Bearing W/Races, TR690 Sungear To Planet (2.785"OD)(.130"Thick) 2009-Up	1	
353233A	Bearing W/Race, TR690 Forward Drum To Sungear (1.485"OD)(.195"Thick) 2009-Up	1	
353234A	Spacer, TR690 Bearing To Sungear (1.562"OD)(.195"Thick) 2009-Up	1	
353235A	Roller Bearing, TR690 Primary Pulley To Case (15 Rollers)(3.150"OD)(.863"Thick) (Cast # NTN 2U09101521) 2009-Up	1	
353236A	Ball Bearing, TR690 Input Clutch Hub To Bell Housing (14 Bal)(3.150"OD)(.548"Thick) (CAST # KOYO 6010138) 2009-Up	1	
353254A	Bearing W/Races, TR690 Planet To Intermidate Case (2.785"OD)(.130"Thick) 2009-Up	1	
353264A	Ball Bearing, TR690 Primary Pulley Front (9 Balls)(2.990"OD)(.550"Thick) (Cast # NTN SC06D02CS12) 2009-Up	1	
353268A	Roller Bearing, TR690 Transfer Hub (1.010"Thick)(16 Rollers)(Plastic Cage) 2009-Up	1	
353269A	Ball Bearing, TR690 Transfer Hub To Extension Housing (14 Balls)(3.150"OD)(1.968"ID) (.628"Thick)(Cast #SK 6010) 2009-Up	1	
353271A	Shim, TR690 Ball Bearing To Extension Housing (.011"Thick)(2.635"OD) 2009-Up	1	
353272A	Bearing W/Races, TR690 Transfer Drum To Hub (.165"Thick)(2.076"OD) 2009-Up	1	
353273A	Race, TR690 Pinion (4 Bolt)(Double Race)(2.360"ID)(1.338"Tall)(No Marking) 2009-Up	1	
353274A	Bearing, TR690 Pinion Tapered (22 Rollers)(1.610"OD)(KOYO 2DUF041S-13) 2009-Up	2	
353277A	Shim, TR690 Pinion (4 Holes)(.013"Thk)(3.240"ID) 2009-Up	1	
353279A	Ball Bearing, TR690 Case Rear To Transfer Gear (10 Balls)(2.835"OD) (Cast # KOYO DG407214B) 2009-Up	1	
353279B	Ball Bearing, TR690 Transfer Forward Gear To Retainer (9 Balls)(3.150"OD)(.706"Thick) (Cast # 6208N) 2009-Up	1	
353280A	Ball Bearing, TR690 Transfer (9 Balls)(2.835"OD)(Cast # KOYO 6207) 2009-Up	1	
353282A	Shim, TR690 Transfer Gear (1.558"OD)(.047"Thick) 2009-Up	1	
353284A	Shim, TR690 Primary Pulley Bearing To Bell (Front)(.011"Thick)(2.965"OD) 2009-Up	2	
353291A	Cup Race, TR690 Differential Bearing (Tapered)(3.152"OD)(.510"Thick)(Cast # KOYO STB4080) 2010-Up	2	
353292A	Tapered Bearing, TR690 Differential (17 Rollers)(Cast # KOYO STB4080) 2009-Up	2	
353295A	Ball Bearing, TR690 Front Cover To Drive Pump Sprocket (22 Balls)(2.833"OD)(2.164"ID) (Cast # KOYO 6811-4) 2009-Up	1	
353296A	Ball Bearing, TR690 Intermediate Case To Transfer Driven Gear (9 Balls)(3.150"OD)(KOYO 6208) 2009-Up	1	
353298A	Needle Bearing, TR690 Transfer Gear To Extension Housing (12 Balls)(2.676"OD)(.588"Thick) (Cast # NSK 6008) 2009-Up	1	

PART #	GASKETS & RUBBER COMPONENTS	QTY	REFERENCE #
353303A	O-Ring, TR690 Differential Retainer To Bell Housing (3.620"OD)(.078"Thick) 2009-Up	2	
353306A	O-Ring, TR690 Chain Oiler To Case (.400"OD)(.047"Thick) 2009-Up	1	
353307A	O-Ring Tube, TR690 Case (.350"OD)(.060"Thick)(Oiler Tube To 991-1 In Ball)(They Connect To Each Other) 2009-Up	1	
353310A	Gasket, TR690 Pump To Bell Housing (Metal)(10 Holes)(.015"Thick) 2009-Up	1	
353311A	O-Ring, TR690 Pump To Bell Housing (Small)(1.205"OD) 2009-Up	1	
353311B	O-Ring, TR690 Pump To Bell Housing (Large)(1.365"OD) 2009-Up	1	
353323AK	O-Ring Set, TR690 Lock Up On/Off (.725"OD)(.497"OD)(.077"Thick)(2 Pieces) 2009-Up	1	
353325AK	O-Ring Set, TR690 Secondary Line Pressure (3 Piece Set)(1.015"OD)(.965"OD)(.918"OD) 2009-Up	1	
353328A	D-Ring, TR690 Primary Pulley (2.985"OD)(.082"Thick)(Inner) 2009-Up	1	
353335A	D-Ring, TR690 Input Clutch Outer(3.680"OD)(.078"Thick)(.149"Wide) 2009-Up	1	

© Whatever It Takes Transmission Parts. Inc.

PART #	GASKETS & RUBBER COMPONENTS (Continued)	QTY	REFERENCE #
353336A	D-Ring, TR690 Input Clutch Inner (2.170"OD)(.078"Thk)(.149"Wide) 2009-Up	1	
353342A	O-Ring, TR690 Pump Pressure Tube (1.205"OD)(.125"Thick) 2009-Up	2	
353346A	O-Ring, TR690 Lube Pressure Plug To Case (.725"OD)(.075"Thick) 2009-Up	1	
353358A	O-Ring, TR690 Platic Lube Tube To Spacers (.410"OD)(.050"Thk) 2009-Up	2	
353375A	O-Ring, TR690 Front Cover To Bell Housing(Oil Transfer)(.775"OD)(.064"Thick) 2009-Up	2	
353378A	Seal, TR690 Cooler Line Bolt (Brass)(.075"Thick)(.832"OD)(.550"ID) 2010-Up	2	
353379A	O-Ring, TR690 Filter Neck (1.425"OD)(.130"Thick) 2009-Up	1	
353380A	O-Ring, TR690 Input Shaft To Converter 2009-Up	1	
353382-1A	O-Ring, TR690 Pump Suction Tube To Case-Lower (1.550"OD)(.145"Thick) 2009-Up	1	
353382A	O-Ring, TR690 Pump Suction Tube To Pinion Retainer-Upper (1.430"OD x .130"Thick)2009-Up	1	
353383A	O-Ring, TR690 Converter Pressure Tube (.500"OD)(.060"Thick) 2009-Up	2	
353387A	Gasket, TR690 Differential Oil Fill & Diff Oil Check (.955"OD)(.725"ID)(.040"Thick) 2009-Up	1	
353387D	Gasket, TR690 Differential Drain Plug (T70 Torx) 2009-Up	1	
353389A	Seal Washer, TR690 Primary Pulley Front Retainer To Bell (Bonded ID)(.790"OD) 2009-Up	2	

PART #	ELECTRICAL COMPONENTS	QTY	REFERENCE #
353410A	Switch, TR690 Inhibitor PRNDL (9 Blade Rectangle Conn) (2 Bolts To Case) (Cast # AV2606 31918 AA090 120731) 2009-Up	1	
353414A	Sensor, TR690 Secondary Oil Pressure (27mm Hex)(3 Blade Connector)(Cast # 42CP9 & V9CZ08) 2009-Up	1	
353420A	Solenoid Assembly, TR690 (Primary Up/Primary Down/Lock-Up/ AWD Transfer W/ Harness) (All Four Look Same) 2009-Up	1	
353425A	Solenoid, TR690 Lock Up On/Off (White Connector)(1.892"Long) 2009-Up	1	
353430A	Solenoid, TR690 Forward Reverse 1 Bolt (3.195"Long)(No O-Rings On Snout) 2009-Up	1	
353435A	Sensor, TR690 Secondary Pulley Speed (2.280"Long)(3 Pin Connector)(G4T08871 Cast) 2009-Up	1	
353438A	Sensor, TR690 Input Speed Sensor (1 Bolt)(3 Pin Oval Connector)(Turbin/Input)(Z Shaped) (Cast # G4T08272 2804) 2009-Up	1	
353439A	Sensor, TR690 Primary Speed Sensor (Primary Pulley Speed)(3 Pin Oval Connector) (90 Degree Shape)(Cast # G4T07571 2704 A) 2009-Up	1	
353451A	Solenoid, TR690 Secondary Pressure (1 Blade Blue Connector)(1.375"OD) 2009-Up	1	

PART #	MISCELLANOUS COMPONENTS	QTY	REFERENCE #
353490A	Vent, TR690 On Top (.435"OD)(Rubber Tube + 2 Bolt Bracket) 2009-Up	1	
353491A	Gasket, TR690 Secondary Pressure (.955"OD)(.040"Thick) 2009-Up	1	
353492A	Plug, TR690 Differential Oil Check & Secondary Pressure (1.020"OD)(.520"Long)(8mm Allen) 2009-Up	1	
353492B	Plug, TR690 Pressure Tap (.795"OD)(.552"Long)(6mm Allen)(Various Parts On Bell Housing) 2009-Up	3	
353492D	Plug, TR690 Differntial Oil Drain (T70 Torx)(1.335"OD)(.880"Long) 2009-Up	1	
353492F	Plug, TR690 (AWD) Ext Housing (14mm Hex x .710"Long) 2009-Up	1	
353495A	Tube, TR690 Pump Suction VB To Pinion Retainer (Plastic)(2.940"Long) 2009-Up	1	
353496A	Cooler Lines, TR690 Tranmission To Radiator (Banjo Style)(Upper)(2 1/16"Bracket) 2009-Up	1	
353496B	Cooler Lines, TR690 Radiator To Transmission (Banjo Style)(Lower)(1 3/8"Bracket) 2009-Up	1	
353497A	Tube, TR690 Pump Pressure Valve Body To Pinion Retainer (Aluminum(1.170"OD)(.875"Long) 2009-Up	1	

PART #	HARD PARTS	QTY	REFERENCE #
353500A	Pump, TR690 Complete (Retro As Whole Pump With TR580) 2009-Up	1	
353510A	Pump Half, TR690 (Rear)(With Gears)(Cast Iron)(8 Bolt Holes & Needle Beari)(1.650"Thick) (Gear Pocket) 2009-Up	1	
353519A	Cover, TR690 Front Indside Bell (10 Bolt Holes)(2 Dowels)(8 Threaded Holes)(14mm Hex Pressure Tap)(Aluminum) 2009-Up	1	
353520A	Pump Spacer, TR690 (.650"Thick)(4 Threaded Holes)(4 Bolt Holes)(2 Dowels) 2009-Up	1	
353525A	Chain, TR690 Pump Drive (29 Links)(.323 At Pins)(.205 Between Pins Wide) 2009-Up	1	
353526A	Drive Pump Sprocket, TR690 (31 Teeth)(.991"Thick)(1.868"ID) 2009-Up	1	
353527A	Driven Pump Sprocket, TR690 (25 Teeth)(.956"Thick At Center)(19 Splines) 2009-Up	1	
353529A	Converter Reactor, TR690 (6 Bolts)(3.450"Long)(33 Splines) 2009-Up	1	
353530A	Pump Gear Set, TR690 (8 Inner Teeth)(.670"OD W/1 Keyway Slot)(9 Outer Teeth)(2.435"OD) (Both .540"Thick) 2009-Up	1	
353552A	Drum, TR690 Forward (6 Clutch)(4.660"Tall)(24 Teeth Steels) 2009-Up	1	
353554AK	Drum, TR690 Input Clutch (W/35 Teeth Right Angle Gear (3.230"OD) 2009-Up	1	
353558A	Drum, TR690 Transfer Clutch (Stamped Steel)(6 Clutchs)(30 Teeth Steels) 2009-Up	1	
353562AK	Piston Kit, TR690 Forward (Bonded) 2009-Up (Contains: #s 962/972/982/874)	1	
353564AK	Piston Kit, TR690 Input Clutch 2009-Up (Contains: #s 964/974/984)	1	

SUBARU

© Whatever It Takes Transmission Parts. Inc.

353566AK.....Piston Kit, TR690 Reverse (Bonded) 2009-Up (Contains: #s 986/976/966).....1 .....
353568AK.....Piston Kit, TR690 Transfer Clutch (Bonded) 2009-Up (Contains: #s 968/978/988).....1 .....
353574A .....Hub, TR690 Input Clutch (24 Teeth)(3.340"Long)(8 Round Holes)(21 Splines)(3 Sets 7)
.....2009-Up .....1 .....
353587A .....Planet, TR690 (4 Gear Steel)(Aluminum)(17 Teeth Right Angle Gears)(2.213"Tall) 2009-Up .....1 .....
353597A .....Ring Gear, TR690 Forward Clutch (24 Lugs)(.823"Thick) 2009-Up.....1 .....
353617A .....Sun Gear, TR690 With FWD Clutch Hub (36 Outer Teeth)(1.675"Thick Outside) 2009-Up.....1 .....
353670A .....Shaft, TR690 Input Shaft With 31 Teeth Left Angle Gear (2.925"OD)(One Teflon Ring) 2009-Up..1 .....
353671A .....Pump Shaft, TR690 (6 1/4"Long)(.688"OD W/Keyway)(20 Splines) 2009-Up .....1 .....
353678A .....Hub With Shaft, TR690 Transfer (8 7/16"Long)(24 Teeth) 2009-Up.....1 .....
353690A .....Gear, TR690 Park (18 Lugs)(.473"Thick)(Splined ID) 2009-Up .....1 .....
353692A .....Oil Baffle, TR690 Secondary Apply Pulley (Plastic) (4.507"OD)(.658"Thick) 2009-Up .....1 .....
353694-1A.....Spacer, TR690 Primary Pulley Front Retainer (4 Legs)(2.125"ID)(.040"Thick)(Snaps On Retainer)
.....2009-Up .....1 .....
353694A .....Retainer, TR690 Primary Pulley Front (7 1/2"Long)(2.350"ID)(2 Threaded Holes) 2009-Up.....1 .....
353696A .....Retainer, TR690 Secondary Pulley (Front)(2 Bolt Steel)(8 7/8"Long)(.174"Thick) 2009-Up.....1 .....
353697A .....Spacer, TR690 Plastic Lube Tube To Drum (Front)(.670"OD)(.330"Thick) 2009-Up .....1 .....
353697B .....Spacer, TR690 Plastic Lube Tube To Drum (Rear)(.750"OD) (.330"Thick) 2009-Up.....1 .....
353699A .....Tube, A960E Transfer Drum Lube (Front)(Metal)(1.890"Long) 2009-Up .....1 .....
353699B .....Tube, A960E Transfer Drum Lube (Rear)(Plastic)(7 5/8"Long) 2009-Up.....1 .....
353700A .....Chain, TR690 Drive (75 Pins)(1.342"Long)(1.145"Wide Between The Pins) 2009-Up.....1 .....
353701-1A.....Pin, TR690 Oil Guide (Aluminum)(6 1/2"Long)(Has O-Ring) 2009-Up .....1 .....
353701-2A.....Pin, TR690 Oil Guide (Aluminum)(4 3/4"Long)(No O-Ring) 2009-Up .....1 .....
353701AK.....Chain Oiler Kit, TR690 (4 Half Pieces Makes 2 Oilers)(4.845"/5.280"Long)(Each Half Has Oval
.....Window W/2 Lube Holes) 2009-Up.....1 .....
353705A .....Primary Pulley Half, TR690 Stationary (10 1/16"Long)(6 1/2"OD)(2 Sets Splines) 2009-Up.....1 .....
353706A .....Secondary Pulley Half, TR690 Apply (Rear)(6 11/16"OD)(6 1/16"ID) 2009-Up .....1 .....
353707-5A.....Shell, TR690 Primary Pulley (4.885"OD)(2.470"Tall)(1.325"/4.150"ID) 2009-Up .....1 .....
353707A .....Primary Pulley Half, TR690 Apply Front (7 7/16"OD)(3.195"Tall) 2009-Up.....1 .....
353708A .....Secondary Pulley, TR690 Stationary (11 1/4"Long)(6 3/4"OD)(Threaded Right Hand On Each End)
.....2009-Up .....1 .....
353710A .....Gear, TR690 Secondary Apply Pulley (31 Teeth Right Angle)(1.805"Tall) 2009-Up.....1 .....
353711A.....Gear, TR690 Transfer (37 Teeth Right Angle)(.830"Thick Teeth)(8 Holes)(Spline In and Out)
.....2009-Up .....1 .....
353711AK.....Gear Kit, TR690 Transfer (Contains: #s 711/690/890) 2009-Up .....1 .....
353712A .....Gear, TR690 Transfer (41 Teeth Left Angle)(8 Holes)(2.433"Thru Center Tall) 2009-Up.....1 .....
353713A .....Gear, TR690 Driven Transfer (37 Teeth Left Angle)(2.555"Thick)(8 Holes) 2009-Up .....1 .....
353716A .....Housing, TR690 Differential (6 1/2"Tall)(12 Bolts)(2 1/8"Window)(Thin Flong On Both Halves)
.....2009-Up .....1 .....
353717-12A....Plug, TR690 Differential Check (On Case)(14mm Hex)(No Magnet) 2009-Up.....1 .....
353718A .....Retainer, TR690 Transfer Forward Gear In Case (Aluminum)(4.882"OD)(3.145"ID) 2009-Up.....1 .....
353720A .....Pinion Gear, TR690 (10 Spiral Teeth)(18 1/8"Long)(Right Hand Threads) 2009-Up .....1 .....
353720AK.....Gear Set, TR690 Ring & Pinion With Shaft (Contains #s 720 & 730) 2009-Up .....1 .....
353725A .....Retainer, TR690 Differential Axle Seal (Right Hand Threads)(3.720"OD)(1.525"Tall) 2009-Up.....2 .....
353727A .....Clip, TR690 Retainer In Place For Differential (.070"Thick) 2009-Up .....2 .....
353730A .....Ring Gear, TR690 (12 Bolt)(37 Teeth)(4.250"ID)(Right Hand Threads)(Spiral Gear Teeth)
.....2009-Up .....1 .....
353735A .....Pinion Retainer, TR690 Aluminum (14 Bolts To Bell)(3.125"ID)(Bearing Pocket Secondary)
.....2009-Up .....1 .....
353740A .....Valve Body, TR690 (7 Solenoids)(7 Prong Rectangle Connector) 2009-Up.....1 .....

PART #	VALVE BODY COMPONENTS	QTY	REFERENCE #

353741-1A.....Manual Valve, TR690 (4.022"Long)(.470"OD)(3 Lands) 2009-Up .....1 .....
353741-4A.....Bracket, TR690 Forward & Reverse Solenoid To Valve Body (One Bolt) .....1 .....

PART #	HARD PARTS (Continued)	QTY	REFERENCE #

353750A .....Bell Housing, TR690 (15 Bolts To Case)(9 Bolts To Engine)(2 Dowels)(14mm Hex Bolts To Case)
.....2009-Up .....1 .....
353755-1A.....Cover, TR690 Front Seal (7 Bolts)(2 Dowel Holes)(2.575"Seal Pocket)(1.225"Thixk) 2009-Up.....1 .....
353759A .....Intermediate Case, TR690 (4 1/2"Thick)(14 Bolts To Case)(10 Threaded Holes For Extension
.....Housing) 2009-Up .....1 .....
353760A .....Case, TR650 (13 Bolts To Intermediate Case)(15 Bolts To Bell)(13 Pan Bolts)(13 3/4"Long)
.....2009-Up .....1 .....
353761-6A.....Plug, TR690 Lube Pressure (On Case)(Hollow)(6mm Allen).....1 .....
353765-6A.....Plug, TR690 Drain In Pan (14mm Hex x .710"long) 2009-Up.....1 .....
353765A .....Pan, TR690 Bottom (13 Bolt)(Drain Plug) 2009-Up .....1 .....
353770A .....Extension Housing, TR690 (10"Long)(10 Bolts)(2 Dowels)(6 Threaded Holes On Rear)
.....2009-Up .....1 .....

© Whatever It Takes Transmission Parts. Inc.

PART #	HARD PARTS (Continued)	QTY	REFERENCE #
353771A	Dust Sheild, TR690 AWD Tail Housing (2.253”Long) 2009-Up	1	
353776AK	Bolt Set, TR690 Bell To Case (15 Pieces)(15-14mm Head x 1.910”Long) 2009-Up	1	
353778AK	Bolt Set ,TR690 Front Cover To Bell (5 Pieces) 2009-Up	1	
353779AK	Bolt Set, TR580 Bottom Pan (10mm Hex x .710”Long)(13 Pieces) 2009-Up	1	
353780AK	Bolt Set, TR690 Front Seal Cover To Bell (7 Pieces)(12mm Hex x 1.150”Long) 2009-Up	1	
353781AK	Bolt Set, TR690 Extension Housing (AWD)(10 Pieces)(12mm Hex x 1.460”Long) 2009-Up	1	
353782AK	Bolt Set, TR690 VB To Bell Housing (10mm Hex X 2.497”Long)(12 Pieces) 2009-Up	1	
353783AK	Bolt Set, TR690 Converter Reactor (6 Pieces)(E16 Head x 1.18Long) 2009-Up	1	
353784AK	Bolt Set, TR690 Primary Pulley Front Retainer To Bell (12mm Hex x 1.800”Long) 2009-Up	2	
353785AK	Bolt Set, TR690 Inter. Case To Main Case (14 Pieces)(12mm Hex x 1.460”Long) 2009-Up	1	
353786AK	Bolt Set, TR690 Ring Gear To Differential Housing (E20 Head x 1.060”Long) 2009-Up	1	
353787AK	Bolt Set, TR690 Pinion (4 Pieces)(14mm Hex x 1.500”Long) 2009-Up	1	
353794A	Bolt Set, TR690 Retainer Clip Differential (14mm Hex x .820”Long)(2 Pieces) 2009-Up	1	
353795A	Nut, TR690 Primary Pulley Front (43mm x .630”Tall)(1.208”ID)(Right Hand Threads) 2009-Up	1	
353796A	Nut, TR690 Pinion (44mm Hex)(Right Hand Thread)(1.885”OD)(.552”Tall) 2009-Up	1	
353797-1A	Nut, TR690 Secondary Apply Pullley (Front)(1.203”ID)(43mm Hex x .628”Thick) 2009-Up	1	
353797A	Nut, TR690 Secondary Pulley Front (Right Hand Thread)(43mm Hex x .315”Thick)(1.200”ID) 2009-Up	1	
353799AK	Bolt Set, TR690 Secondary Pulley Retainer To Pinion Housing (2 Pieces) (14mm Hex x 1.135”Long) 2009-Up	1	
353839A	Magnet, TR690 Pan (Donut) 2009-Up	1	
353852A	Cushion, TR690 Forward Clutch (5.705”OD)(.090”Thick) 2009-Up	1	
353854A	Cushion, TR690 Reverse Clutch (6 1/8”OD)(.078”Thick) 2009-Up	1	
353860A	Snap Ring, TR690 Secondary Apply Pulley (Front)(.078”Thick)(6 1/2”OD) 2009-Up	1	
353871A	Snap Ring, TR690 Transfer Clutch Piston Kit (1.975”OD)(.059”Thick) 2009-Up	1	
353873A	Snap Ring, TR690 Transfer Clutch Top (5.043”OD)(.058”Thick) 2009-Up	1	
353874A	Snap Ring, TR690 Forward Piston Kit (1.510”OD)(.045”Thick) 2009-Up	1	
353878A	Snap Ring, TR690 Input Clutch (4.425”OD)(.098”Thick)(Top) 2009-Up	1	
353879A	Snap Ring, TR690 Input Clutch Piston Kit(1.843”OD)(.048”Thick)2009-Up	1	
353880A	Snap Ring, TR690 Forward Ring Gear To Drum (6 1/8”OD)(.075”Thick) 2009-Up	1	
353883A	Snap Ring, TR690 Primary Pulley To Case Bearing (3.365”OD)(.055”Thick) 2009-Up	1	
353884A	Snap Ring, TR690 Secondary Pulley To Case Bearing (2.630”OD)(.055”Thick) 2009-Up	1	
353886A	Snap Ring, TR690 Holds Retainer In Right Of Case (5.238”OD)(.090”Thick) 2009-Up	1	
353888A	Snap Ring, TR690 Forward (6 1/8”OD)(.198”Thick) 2009-Up	1	
353890A	Snap Ring, TR690 Park Gear To Transfer Gear (2 Eyelets)(.079”Thick)(2.166”OD) 2009-Up	1	
353892A	Snap Ring, TR690 Reverse Clutch In Int. Case (6 1/2”OD) 2009-Up	1	
353893A	Snap Ring, TR690 Reverse Piston Kit (2.798”OD)(.054”Thick) 2009-Up	1	
353898A	Snap Ring, TR690 Front Cover To Ball Brg On Drive Pump Sprocket (.048”Thick)(2.185”OD) (.116”Wide) 2009-Up	1	
353899A	Snap Ring, TR690 Ball Bearing To Front Cover (3.125”OD)(.047”Thick)(.156”Wide)(Stepped Ends) 2009-Up	1	
353960A	Retainer, TR690 Secondary Apply Pulley (2.895”Tall)(1.715”ID) 2009-Up	1	
353961A	Piston, TR690 Secondary Apply Pulley (Bonded)(6 3/16”OD)(1.165”Tall)(Cast # NOK XR0886E) 2009-Up	1	
353962A	Piston, TR690 Forward (Bonded)(5.583”OD)(.920”Tall)(Cast # NOK XR0883E) 2009-Up	1	
353964A	Piston, TR690 Input Clutch (3.982”OD)(.520”Tall)(Steel) 2009-Up	1	
353966A	Piston, TR690 Reverse (Bonded)(5.810”OD)(.557”Thick)(Cast # NOK XR0885E) 2009-Up	1	
353968A	Piston, TR690 Transfer Clutch (Bonded)(4.685”OD)(Cast # NOK BR6072E) 2009-Up	1	
353970-1A	Spring Seat, TR690 Secondary Apply (3.230”OD)(Metal)(.230”Tall) 2009-Up	1	
353970A	Spring, TR690 Secondary Apply (4.705”Tall)(3.087”OD)(.340”Wire OD) 2009-Up	1	
353972A	Return Spring, TR690 Forward (Spiral)(3.180”OD)(.915”Tall) 2009-Up	1	
353974A	Return Spring, TR690 Input Clutch (3.420”OD)(.064”Thick)(.366”Tall)(With 10 Bent Fingers) 2009-Up	1	
353976A	Return Spring, TR690 Reverse (4.140”OD)(.950”Tall Sprial) 2009-Up	1	
353978A	Return Spring, TR690 Transfer Clutch (2.817”OD)(Spiral)(1.080”Tall) 2009-Up	1	
353981-5A	Piston Housing, TR690 Primary Pulley (7 9/16”OD)(1.235”Tall) 2009-Up	1	
353981A	Piston, TR690 Primary Pulley Apply (4.160”OD) (.761”Tall) 2009-Up	1	
353982A	Retainer, TR690 Forward (Bonded) (3.805”OD)(.915”Tall) 2009-Up	1	
353984A	Retainer, TR690 Input Clutch (2.355”OD)(.040”Thick) (6 Cut Outs) 2009-Up	1	
353986A	Retainer, TR690 Reverse Clutch (4.340”OD)(.325”Tall) 2009-Up	1	
353988A	Retainer, TR690 Transfer Clutch (Bonded)(4.460”OD)(.612”Thick)(Cast # KOYO BR5697E) 2009-Up	1	
353990A	Collar, TR690 Secondary Retainer To Gear (1.895”Tall) (3.863”OD) 2009-Up	1	
353991-2A	Detent Spring, TR690 (3.340”Long)(.235”OD) 2009-Up	1	
353991-3A	Rooster Comb, TR690 (.550”ID)(5 Detents)(.675”Thick) 2009-Up	1	
353991-4A	Shaft, TR690 Linkage (4.235”Long)(.550”OD) 2009-Up	1	
353991-5A	Roll Pin, TR690 Rooster Comb & Manual Lever To Linkage Shaft (.885”Long)(.205”OD) 2009-Up	1	

SUBARU

© Whatever It Takes Transmission Parts. Inc.

353991-6A.....Actuator, TR690 (2 Bolts)(V Notch Tapered)(2.425”Long) 2009-Up .....1 .....
353992A.....Shift Lever, TR690 External (2.420”Long)(.615”Thick At Hole)(Keyway Slot) 2009-Up.....1 .....
353994A.....Park Rod, TR690 (3 Bends) (14”Long)(.852”Ball OD) 2009-Up .....1 .....
353995A.....Park Pawl Assy, TR690 (Park Pawl/Pin/Spring) 2009-Up.....1 .....
353996A.....Bolt, TR690 Cooler Line To Case (8mm Hex x 1.363”Long)(Upper Line) 2009-Up .....1 .....
353996B.....Bolt, TR690 Cooler Line To Case (19mm Hex x 1.225”Long)(Lower Line) 2009-Up .....1 .....
353999-1A.....Lube Tube, TR690 On Bell Housing Held In By Vent Cover (.235” Long Tube)
.....(1.612”Long x .470/.550”OD Tube) 2009-Up .....1 .....
353999-2A.....Tube Converter, TR690 Pressure Aluminum (6 11/16”Long)(2 O-Rings)(.490”/.430”OD)
.....2009-Up .....1 .....
353999-3A.....Lube Tube, TR690 Bolts To PinioRetainer (W/2 Bolts)(Lock-Up Release Oil) 2009-Up .....1 .....
353999-4A.....Tube, TR690 In Case (.236”Tube OD)(1 Bolt Bracket) 2009-Up .....1 .....

© Whatever It Takes Transmission Parts. Inc.

002
Overhaul Kit

004
Master L/Steels Kit

006
Master W/Steels Kit

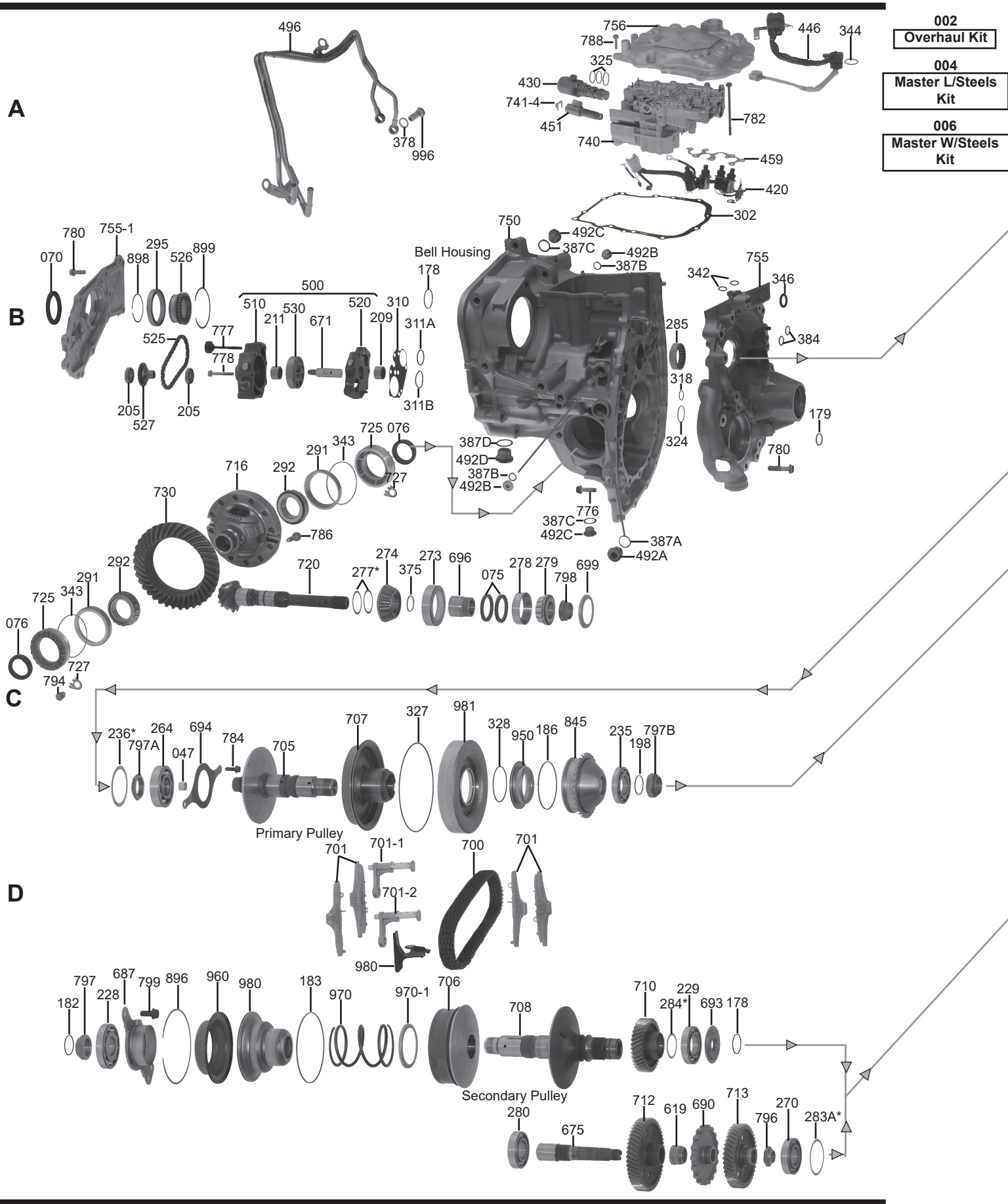

SUBARU

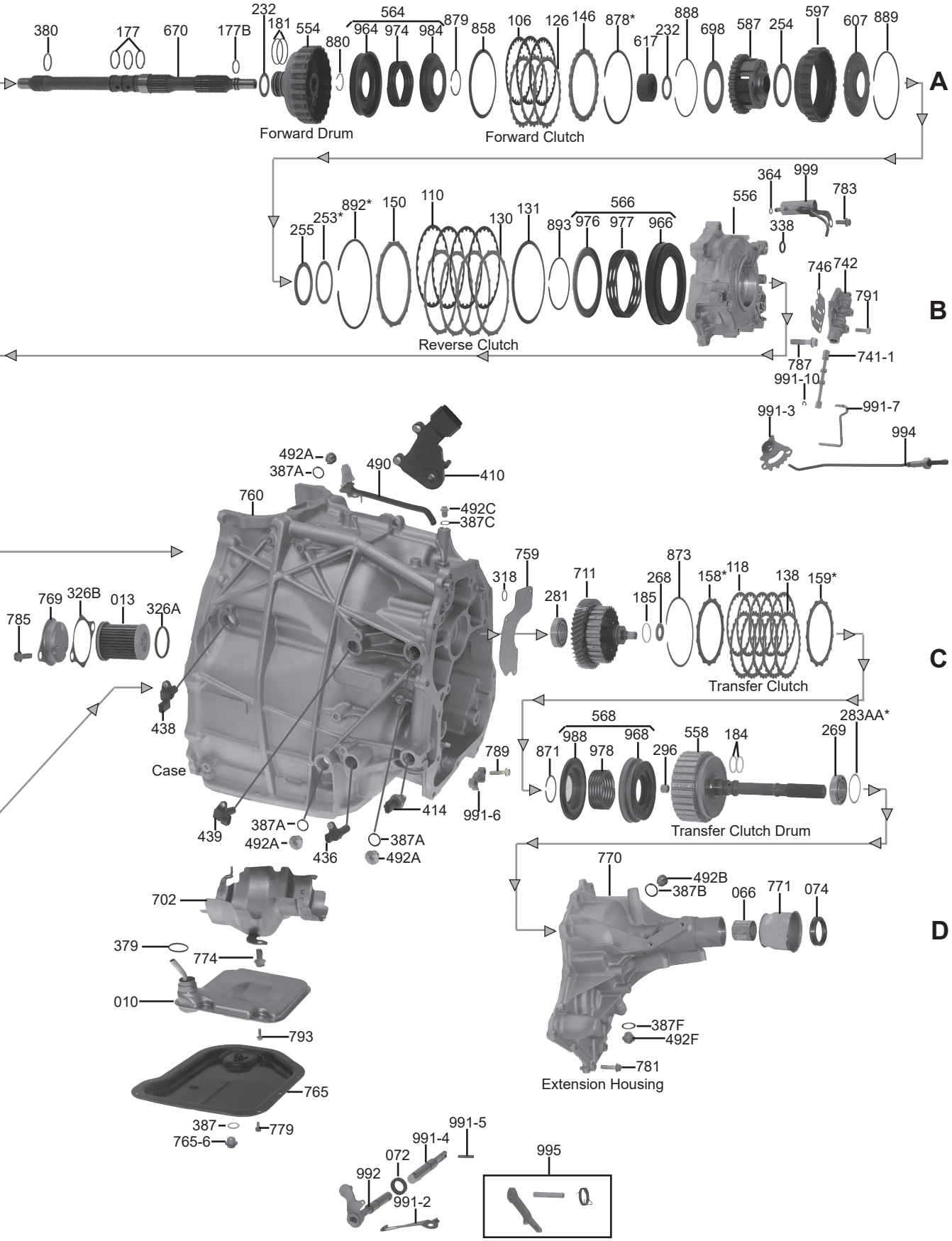

SUBARU

1-800-940-0197

© Whatever It Takes Transmission Parts. Inc.

PART #	OVERHAUL KITS	QTY	REFERENCE #
163002A	Overhaul Kit, TR580 CVT 2010-Up	1	

PART #	MASTER L/STEELS	QTY	REFERENCE #
163004A	Master L/Steels, TR580 CVT 2010-Up	1	

PART #	MASTER W/STEELS	QTY	REFERENCE #
163006A	Master W/Steels, TR580 CVT 2010-Up	1	

PART #	FILTERS	QTY	REFERENCE #
163010A	Filter, TR580 (3 Bolt)(All Metal)(Rectangle Pick Up)(Tube Coming Out Of Outlet) 2010-Up	1	
353013A	Filter, TR580 Cooler In Case (2.365”Long) 2010-Up	1	

PART #	BUSHINGS	QTY	REFERENCE #
163047A	Bushing, TR580 Primary Pulley Front (.695”OD)(.560”ID)(2 Angled Grooves) 2010-Up	1	
353066A	Bushing, TR580 (AWD) Extension Housing (Babbit)(1.385”ID)(1.580”Long) 2010-Up	1	

PART #	MEDAL CLAD SEALS	QTY	REFERENCE #
353070A	Seal, TR580 Front (2.580”OD)(1.820”ID)(.235”Thick)(Cast # NOK XH882E) 2010-Up	1	
73072	Seal, TR580 Linkage (.955”OD)(.200”Thick)(Cast # NOK AW0582G) 2010-Up	1	
53074	Seal, TR580 Rear (1.375”ID)(Without Flange)(AWD) 2010-Up	1	
163075A	Seal, TR580 Pinion (2.170”OD)(.255”Thick) 2010-Up	2	
163076A	Seal, TR580 Axle (1.965”OD)(.590”Tall)(1.350”ID)(Cast # NOK AH2058G) 2010-Up	1	

PART #	FRICTION CLUTCH	QTY	REFERENCE #
163106A	Friction, TR580 Forward (30 Teeth)(.062”Thick)(4.830”OD)(Straight Grooves) 2010-Up	3	
163110A	Friction, TR580 Reverse Clutch (24 Teeth)(5.880”OD)(.065”Thick) 2010-Up	4	
353118A	Friction, TR580 Transfer Clutch (24 Teeth)(4.645”OD)(.071”Thick) 2010-Up	5	

PART #	STEEL CLUTCH	QTY	REFERENCE #
163126A	Steel, TR580 Forward (.046”Thick)(24 Dipped Teeth) (4.310”ID) 2010-Up	3	
163130A	Steel, TR580 Reverse Clutch (12 Teeth)(.047”Thick)(5.343”ID) 2010-Up	4	
163131A	Cushion, TR580 Reverse Clutch (.077”Thick)(5.920”OD)(Beveled) 2010-Up	1	
353138A	Steel, TR580 Transfer Clutch (30 Teeth)(4.110”ID)(.063”Thick) 2010-Up	5	

PART #	PRESSURE PLATES	QTY	REFERENCE #
163146A	Pressure Plate, TR580 Forward (Top) (24 Dipped Teeth)(.180”Thick)(4.310”ID) 2010-Up	1	
163150A	Pressure Plate, TR580 Reverse (12 Teeth)(.165”Thick)(5.340”ID) 2010-Up	1	
163158A	Pressure Plate, TR580 Transfer Clutch (Top)(15 Teeth)(4.114”ID)(.143”Thick) 2010-Up	1	
163159A	Backing Plate, TR580 Transfer Clutch (15 Teeth)(.138”Thick)(4.114”ID) 2010-Up	1	

PART #	SEALING RINGS	QTY	REFERENCE #
163177A	Ring, TR580 Input Shaft (.975”OD)(.074”Thick) 2010-Up	3	
163177B	Ring, TR580 Input Shaft Pilot (Rear)(.690”OD)(.062”Thick)(Double Lap Joint) 2010-Up	1	
353178A	Ring, TR580 Stator Tube (1.480”OD)(.074”Thick)(Stepped)(Double Lap Joint) 2010-Up	1	
163179A	Ring, TR580 Pinion Retainer To Secondary Front Ball Bearing (.695”OD)(.063”Thick) 2010-Up	1	
163181A	Ring, TR580 Forward Drum (1.835”OD)(.074”Thick)(Double Lap Joint Ends) 2010-Up	2	
163182A	Ring, TR580 Secondary Pulley Pinion Retainer To Front Bearing (.695”OD)(.063”Thick)(Stepped) (Double Lap Joint) 2010-Up	1	
163183A	Ring, TR580 Secondary Pulley Front Retainer (5.420”OD)(.085”Thick)(Double Lap Joint) 2010-Up	1	
163184AT	Ring, TR580 Transfer Clutch Output Shaft (1.188”OD)(Double Lap Joint)(.075”Thick)(White) (Teflon) 2010-Up	2	
163185AT	Ring, TR580 (AWD) Driven Gear (1.365”OD)(.074”Thick)(Double Lap Joint)(Teflon)(White) 2010-Up	1	
163186AT	Ring, TR580 Primary Pulley Half (Rear)(Outer)(Teflon)(Double Lap Joint)(.086”Thick)(3.675”OD) 2010-Up	1	
163198A	Ring, TR580 Primary Pulley To Case (Rear)(.695”OD)(.063”Thick)(Stepped)(Double Lap Joint) 2010-Up	1	

© Whatever It Takes Transmission Parts. Inc.

PART #	WASHERS & BEARINGS	QTY	REFERENCE #
353205A	Ball Bearing, TR580 Driven Sprocket To Front Cover (.588"ID)(1.100"OD)(10 Balls) (Cast # KOYO 6902) 2010-Up	1	
163209A	Needle Bearing, TR580 Rear Pump Half (.985"OD)(.587"Thick)(13 Needles) 2010-Up	1	
163211A	Needle Bearing, TR580 Front Pump Half (.968"OD)(.580"Long)(13 Needles) 2010-Up	1	
163228A	Ball Bearing, TR580 Secondary Pulley (Front)(10 Balls)(3.465"OD)(.628"Thick)(Cast # KOYO DG358816-1) 2010-Up	1	
163229A	Ball Bearing, TR580 Secondary Rear To Case (10 Balls)(2.912"OD)(.548"Thick)(Cast # KOYO DB407414LT) 2010-Up	1	
163232A	Bearing W/Races, TR580 Forward Drum To Stator Shaft (1.695"OD)(.126"Thick) 2010-Up (Also Fits TR580 Planet To Sungear 2010-Up)	1	
163235A	Ball Bearing, TR580 Primary Pulley (Rear)(11 Balls)(2.836"OD)(.488"Thick)(Cast # KOYO DG357213-1) 2010-Up	1	
163236A	Shim, TR580 Reverse Clutch Housing To Primary Pulley Front Bearing (3.202"OD) 2010-Up	2	
163253A	Shim, TR580 Planet Ring Gear To Reverse Clutch Housing (3.063"OD)(.071"Thick) 2010-Up	1	
163254A	Bearing W/Races, TR580 Planet To Ring Gear Hub (3.060"OD)(.150"Thick) 2010-Up (Also Fits TR580 Planet Ring Gear To Reverse Clutch Housing 2010-Up)	1	
163255A	Use 163254A.	1	
163264A	Ball Bearing, TR580 Primary Pulley (Front)(3.227"OD)(.765"Thick)(7 Balls)(Cast # KOYO DG358220-1) 2010-Up	1	
163268A	Bearing W/Races, TR580 (AWD) Driven Gear To Transfer Drum (1.293"OD)(.134"Thick) 2010-Up	1	
163269A	Use 163281A.	1	
163270A	Use 163280A.	1	
163273A	Race, TR580 Pinion (Front) (Tapered)(3.148"OD)(2.255"ID)(Cast # KOYO ST3680) 2010-Up	1	
163274A	Bearing, TR580 Pinion Tapered (Front)(16 Rollers)(1.415"ID)(Cast # KOYOST3680) 2010-Up	1	
163277A	Shim, TR580 Pinion Gear To Bearing (Front)(1.852"OD)(.009"Thick) 2010-Up	2	
163278A	Race, TR580 Pinion (Rear)(Tapered)(2.558"OD)(1.952"ID)(Cast # KOYO 322/320R-9)2010-Up	1	
163279A	Bearing, TR580 Pinion (Rear)(Tapered)(1.258"ID)(Cast # KOYO 322/320R) 2010-Up	1	
163280A	Ball Bearing, TR580 Case To Transfer Shaft (9 Balls) (2.835"OD)(.667"Thick)(Cast # KOYO 6207) 2010-Up (Also Fits TR580 AWD Drive Gear To Ext Housing 2010-Up)	1	
163281A	Ball Bearing, TR580 Case To (AWD) Driven Gear (11 Balls)(2.165"OD)(.510"Thick) (Cast # KOYO 6006) 2010-Up (Also Fits Transfer Drum To Extension Housing 2010-Up)	1	
163283A	Shim, TR580 Bearing To Extension Housing (2.808"OD)(.020"Thick) 2010-Up (Also Fits TR580 Transfer To Extension Housing 2010-Up)	2	
163283AA	Shim, TR580 Bearing To Extension Housing (2.808"OD)(.016"Thk) 2010-Up (Also Fits TR580 Transfer To Extension Housing 2010-Up)	2	
163284A	Shim, TR580 Secondary Drive Transfer Gear To Bearing (1.950"OD)(1.583"ID) 2010-Up	3	
163285A	Needle Bearing, TR580 Bell Housing 2010-Up	1	
353291A	Cup Race, TR580 Differential Bearing (Tapered)(3.152"OD)(.510"Thick)(Cast # KOYO STB4080) 2010-Up	2	
163292A	Tapered Bearing, TR580 Differential (17 Rollers)(.573"ID)(Cast # KOYO STB4080) 2010-Up	1	
353295A	Ball Bearing, TR580 Front Cover To Drive Pump Sprocket (22 Balls)(2.833"OD)(2.164"ID) (Cast # KOYO 6811-4) 2010-Up	1	
163296A	Needle Bearing, TR580 Transfer Clutch Drum (.575"ID)(.550"Long) 2010-Up	1	

PART #	GASKETS & RUBBER COMPONENTS	QTY	REFERENCE #
163302A	Gasket, TR580 Top Cover (Metal)(14 Holes & 2 Slots) (.020"Thick) 2010-Up	1	
353310A	Gasket, TR580 Pump To Bell Housing (Metal)(10 Holes)(.015"Thick) 2010-Up	1	
353311A	O-Ring, TR580 Pump To Bell Housing (Small)(1.205"OD) 2010-Up	1	
353311B	O-Ring, TR580 Pump To Bell Housing (Large)(1.365"OD) 2010-Up	1	
163318A	O-Ring, TR580 Bell Housing To Pinion Retainer (Small)(.775"OD)(.065"Thick) 2010-Up	1	
163324A	O-Ring, TR580 Bell Housing To Pinion Housing (1.410"OD)(.072"Thick) 2010-Up	1	
353325AK	O-Ring Set, TR580 Secondary Line Pressure (3 Piece Set)(1.015"OD)(.965"OD)(.918"OD) 2010-Up	1	
163326A	O-Ring, TR580 Cooler (.122"Thick)(2.250"OD) 2010-Up	1	
163326B	Gasket, TR580 Cooler Filter Cover To Case (.030"Thick)(Metal)(2 Bolt Holes) 2010-Up	1	
163327A	D-Ring, TR580 Primary Pulley Half (Rear)(Outer)(7"OD)(.076"Thick) 2010-Up	1	
163328A	D-Ring, TR580 Primary Pulley Half (Rear) Piston (Inner)(2.810"OD)(.085"Thick) 2010-Up	1	
163338A	Use 163346A.	1	
163342A	O-Ring, TR580 Pinion Retainer To Valve Body (.678"OD)(.091"Thick) 2010-Up	2	
163343A	O-Ring, TR580 Differential Axel Seal Retainer (3.220"OD)(.080"Thick) 2010-Up	2	
163344A	O-Ring, TR580 Case Connector To Top Cover (1.020"OD)(.095"Thick) 2010-Up	1	
163346A	O-Ring, TR580 Pinion Retainer To Case (.860"OD)(.142"Thick) 2010-Up (Also Fits TR580 Reverse Housing To Case 2010-Up)	1	
163364A	O-Ring, TR580 Oil Tube To Pinion Housing (.338"OD)(.062"Thick) 2010-Up	1	
163375A	O-Ring, TR580 Pinion Shaft To Bearing Spacer (.076"Thick)(1.267"OD) 2010-Up	1	
353378A	Seal, TR580 Cooler Line Bolt (Brass)(.075"Thick)(.832"OD)(.550"ID) 2010-Up	2	

© Whatever It Takes Transmission Parts. Inc.

PART #	GASKETS & RUBBER COMPONENTS (Continued)	QTY	REFERENCE #
353379A	O-Ring, TR580 Filter Neck (1.425”OD)(.130”Thick) 2010-Up	1	
163380A	O-Ring, TR580 Input Shaft (.925”OD)(.076”Thick)(Black) 2010-Up	1	
163384A	O-Ring, TR580 Pinion Retainer To Reverse Clutch Housing (.563”OD)(.069”Thick) 2010-Up	2	
163387	Gasket Washer, TR580 Drain Plug To Pan (Aluminum)(.830”OD)(.650”ID)(.050”Thick) 2010-Up	1	
353387A	Gasket, TR580 Differential Oil Fill & Differential Oil Check (.955”OD)(.725”ID)(.040”Thick) 2010-Up	1	
163387B	O-Ring, TR580 Pressure Tap (.635”OD)(.083”Thick)(Various Locations On Bell Housing) 2010-Up	1	
163387C	O-Ring, TR580 Primary Pressure Plug (.950”OD)(.079”Thick) 2010-Up	1	
353387D	O-Ring, TR580 Differential Drain Plug (1.278”OD)(.068”Thick) 2010-Up	1	

PART #	ELECTRICAL COMPONENTS	QTY	REFERENCE #
353410A	Switch, TR580 Inhibitor PRNDL (9 Blade Connector)(2 Bolts To Case)(Cast # AV2606 31918 AA090 120731) 2010-Up	1	
163414A	Switch, TR580 SPS (Secondary Pressure)(3 Pin Oval Connector)(Cast # 93CP9-4 K12CZ22) (27mm Hex)(2.300”Tall) 2010-Up	1	
163420A	Solenoid Assembly, TR580 (9 Blade Yellow Connector)(4 Solenoids)(Primary Up & Down) (Lock Up Duty & AWD)(Fluid Temp Sensor)(2 O-Rings On Each) 2010-Up	1	
163430A	Solenoid, TR580 Secondary Line Pressure (2 Bolts To VB) (1 Blade Blue Conn)(4.580”Long) (3 O-Rings On Snout) 2010-Up	1	
163436A	Sensor, TR580 SSS (Secondary Pulley Speed)(Straight) (Cast # G4T08971) 2010-Up	1	
353438A	Sensor, TR580 ISS (3 Pin Oval Connector)(Turbin/Input)(Z Shaped)(Cast # G4T08272 2804) (1 Bolt) 2010-Up	1	
353439A	Sensor, TR580 PSS (Primary Pulley Speed)(3 Pin Oval Connector)(90 Degree Shape) (Cast # G4T07571 2704 A) 2010-Up	1	
163446A	Wire Harness, TR580 Internal (External Pass Through)(9 Blade Square External Connector) (9 Wire Female Rectangle Connector) 2010-Up	1	
163451A	Solenoid, TR580 Forward & Reverse (1 Bolt)(3.195”Long)(2 Pin Connector)(No O-Rings On Snout) 2010-Up	1	
163459A	Bracket, TR580 Solenoid Assembly (7 Bolt Holes)(.063”Thick)(5.365”Long) 2010-Up	1	

PART #	MISC. COMPONENTS	QTY	REFERENCE #
163490A	Vent, TR580 Case (On Top) (1 Bolt Bracket)(Plastic) (Bell Shaped Cap W/Tube) 2010-Up	1	
353492A	Plug, TR580 Differential Oil Check (1.020”OD)(.520”Long)(8mm Allen) 2010-Up	1	
353492B	Plug, TR580 Pressure Tap (.795”OD)(.552”Long)(6mm Allen)(Various Parts On Bell Housing) 2010-Up	2	
163492C	Plug, TR580 Primary Pressure (1.095”OD)(.752”Long)(10mm Allen) 2010-Up	1	
353492D	Plug, TR580 Differential Oil Drain (T70 Torx)(1.335”OD)(.880”Long) 2010-Up	1	
353492F	Plug, TR580 (AWD) Extension Housing (14mm Hex x .710”Long) 2010-Up	1	
163496A	Cooler Lines, TR580 Banjo Fittings (36” & 33”Long)(Welded Together)(Slip On Fittings) 2010-Up	1	

PART #	HARD PARTS	QTY	REFERENCE #
163500A	Pump, TR580 Complete	1	
163510A	Pump Half, TR580 (Front)(W/ Needle Bearing)(Pump Gears) 8 Bolt Holes)(Cast Iron) 2010-Up	1	
163520A	Pump Half, TR580 (Rear)(Cast Iron)(8 Bolt Holes)(2 Dowels)(.650”Thick) 2010-Up	1	
163525A	Chain, TR580 Pump Drive (27 “Mouse Ear” Links)(.322”Wide At Pins) 2010-Up	1	
163526A	Drive Pump Sprocket, TR580 (32 Teeth)(2.455”OD)(.992”Thk) 2010-Up	1	
163527A	Driven Pump Sprocket TR580 (24 Teeth)(1.828”OD)(.965”Thick) 2010-Up	1	
163530A	Pump Gear Set, TR580 (8 Inner Teeth)(9 Outer Teeth)(Both Are .540”Thick)(Lobe Type) 2010-Up	1	
163554AK	Drum, TR580 Forward Clutch W/Input Shaft (3.220”Tall Drum)(14 3/8”Long Shaft) (Stamped Steel) 2010-Up	1	
163556A	Housing, TR580 Reverse Clutch (Aluminum)(6 Bolt)(9 Threaded Holes)(Cast # 052213) 2010-Up	1	
163558AK	Drum, TR580 Transfer Clutch W/Shaft (Stamped Steel)(10 9/16”Long)(30 Teeth)(2 Ring Grooves On Shaft) 2010-Up	1	
163564A	Piston Kit, TR580 Forward Clutch 2010-Up	1	
163566A	Piston Kit, TR580 Reverse Clutch 2010-Up	1	
163568A	Piston Kit, TR580 Transfer Clutch 2010-Up	1	
163587A	Planet, TR580 (6 Gear Steel)(30 Lugs)(17 Teeth & 18 Teeth Gears) 2010-Up	1	
163597A	Ring Gear, TR580 Planet (24 Lugs)(1.325”Thick)(83 Teeth Left Angle)(5.270”OD) 2010-Up	1	
163607A	Hub, TR580 Planet Ring Gear (Rear)(4.560”OD)(.415”Thick)(6 Holes/2 Tabs) 2010-Up	1	

© Whatever It Takes Transmission Parts. Inc.

163617A ..... Sun Gear, TR580 Planet (41 Teeth Right Angle)(.808"Thick)(1.985"OD)(3 Sets Of 5 Splines) 2010-Up 1
163619A ..... Spacer, TR580 Driven Transfer Gear (.925"Thick)(1.536"OD)(2 Holes) 2010-Up 1
163670A ..... Input Shaft, TR580 (14 3/8"Long)(4 Rings & 1 O-Ring) 2010-Up 1
163671A ..... Shaft, TR580 Pump Drive (2.525"Long)(.670"OD)(20 Splines) 2010-Up 1
163675A ..... Shaft, TR580 Transfer (1.377"OD)(6 5/8"Long)(2 Sets Of Splines) 2010-Up 1
163687A ..... Retainer, TR580 Secondary Pulley (Front)(3 Bolts To Pinion Housing)(1.277"Tall)(8"Long) 2010-Up 1
163690A ..... Gear, TR580 Park (18 Lugs)(4.687"OD)(.913"Tall) 2010-Up 1
163693A ..... Spacer, TR580 Secondary Rear Bearing To Case (2.895"OD)(.815"ID)(.300"Tall) 2010-Up 1
163694A ..... Retainer, TR580 Primary Pulley Front Bearing (2 Bolt Steel)(2.410"ID)(8"Long) 2010-Up 1
163696A ..... Spacer, TR580 Pinion Bearing (1.590"Long) 2010-Up 1
163698A ..... Oil Dam, TR580 Planet Front (Tin)(3.725"OD)(.027"/.051"Thick) 2010-Up 1
163699A ..... Oil Dam, TR580 Pinion (.220"Thick)(2.605"OD)(1.915"ID) 2010-Up 1
163700A ..... Chain, TR580 Drive (75 Pins)(1.162"Long)(.945"Wide Between The Pins) 2010-Up 1
163701-1A ..... Pin, TR580 Oil Guide (Aluminum)(2.715"Long)(2.030"Long Lever)(.360"ID Hole) 2010-Up 1
163701-2A ..... Pin, TR580 Oil Guide (Aluminum)(2.715"Long)(3.445"Long Lever)(.370"ID Hole) 2010-Up 1
163701AK ..... Chain Oiler Kit, TR580 (4 Half Pieces Makes 2 Oilers)(Plastic)(5.823"/5.230"Long) 2010-Up 1
163702A ..... Chain, TR580 Oil Baffle Plate (Metal)(3 Bolts)(8 15/16"Tall)(7 1/4"Wide) 2010-Up 1
163703A ..... Chain, TR580 Oil Deflector (Plastic)(One Bolt)(3.035"Tall)(3.220"Wide) 2010-Up 1
163705A ..... Primary Pulley Half, TR580 (Front)(8 5/8"Long)(6.092"OD)(2 Sets Threads & 2 Splines) 2010-Up 1
163706A ..... Secondary Pulley Half, TR580 (Front)(2.592"Tall)(6 5/16"OD)(5.505"ID At Snap Ring Groove) 2010-Up 1
163707A ..... Primary Pulley Half, TR580 (Rear)(7"OD)(3.140"Tall Splined Inside) 2010-Up 1
163708A ..... Secondary Pulley Half, TR580 (Rear)(11 1/8"Long)(6 1/2"OD) (2 Sets Of Splines)(1.372"OD Threaded Ends) 2010-Up 1
163710A ..... Gear, TR580 Secondary Drive Transfer (37 Teeth Left Angle)(4.125"OD)(1.750"Tall) 2010-Up 1
163711A ..... Gear, TR580 AWD Driven (24 Teeth Clutch Hub)(8 Holes) (5.020"OD)(.830"Thick) 2010-Up 1
163712A ..... Gear, TR580 Driven Transfer (52 Teeth)(.907"Wide)(8 Holes) (Splined ID)(5.705"OD) 2010-Up 1
163713A ..... Gear, TR580 AWD Drive (43 Teeth Right Angle)(.830"Thick)(5.020"OD) 2010-Up 1
163716A ..... Housing, TR580 Differential (6 1/2"Tall)(12 Bolt Flanges)(1 1/8"Window) 2010-Up 1
163720A ..... Pinion Gear, TR580 Differential W/Shaft (10 7/16"Long)(10 Spiral Teeth) 2010-Up 1
163720AK ..... Gear Set, TR580 Ring & Pinion W/Shaft (10 7/16"Long)(12 Bolts)(Contains #s 730 & 720) 2010-Up 1
163725A ..... Retainer, TR580 Differential Axle Seal (3.240"OD)(Aluminum)(1.110"Tall) 2010-Up 2
163727A ..... Clip, TR580 Holds Retainer In Place For Differential (.070"Thick)(2 Teeth)(.974"Wide x 1.070") 2010-Up 2
163730A ..... Ring Gear, TR580 Differential (12 Bolt)(37 Teeth)(4.250"ID) 2010-Up 1
163740A ..... Valve Body, TR580 (6 Solenoids & Internal Harness)(9 Bolts To Bell Housing) 2010-Up 1

PART #	VALVE BODY COMPONENTS	QTY	REFERENCE #

163741-1A ..... Manual Valve, TR580 (4.495"Long)(.470"OD)(4 Lands) 2010-Up 1
163742A ..... Housing, TR580 Manual Valve (4 Bolt Aluminum)(4.063"Long) 2010-Up 1
163746A ..... Plate, TR580 Manual Valve Body To Reverse Housing (.040"Thick)(10 Round Holes & 2 Slotted Holes) 2010-Up 1

PART #	HARD PARTS (Continued)	QTY	REFERENCE #

163750A ..... Bell Housing, TR580 (15 Bolts To Case)(8 Holes For Valve Body Cover) 1
163755-1A ..... Cover, TR580 Front Seal (10 Bolts To Bell)(2 Dowel Holes)(2.575"ID)(11 3/4"Long) 2010-Up 1
163755A ..... Pinion Retainer, TR580 (14 Bolts To Bell)(Aluminum)(3.463"Bearing Pocket) 2010-Up 1
163756A ..... Cover, TR580 Case (Top)(Aluminum)(12 Bolt)(2 Dowel Pins)(4 Threaded Holes)(1.020"Connector Holes) 2010-Up 1
163759A ..... Case Plate, TR580 (Bonded On Rear Of Case)(3 Bolts)(6 1/2"Long)(.056"Thick) 2010-Up 1
163760A ..... Case, TR580 (15 Holes To Bell)(12 Bolt Pan)(13"Tall) 2010-Up 1
163765A ..... Pan, TR580 Bottom (12 Bolt Holes)(Drain Plug)(One Rib & One Dimple) 2010-Up 1
353765-6A ..... Plug, TR580 Drain In Pan (14mm x .710"Long) 2010-Up 1
163769A ..... Cover, TR580 Cooler Filter (2 Bolt Tin)(3.855"Long) (2.570"OD)(.635"Thick) 2010-Up 1
163770A ..... Extension Housing, TR580 (AWD)(11 1/4"Long)(13 Bolts)(6 Threaded Mount Holes) 2010-Up 1
163771A ..... Dust Sheild, TR580 AWD Tail Housing (2.253"Long) 2010-Up 1
163774AK ..... Bolt Set, TR580 Oil Baffle Plate (12mm Hex x .915"Long)(3 Pieces) 2010-Up 1
163776AK ..... Bolt Set, TR580 Bell To Case (12mm Hex x 1.475"Long)(15 Pieces) 2010-Up 1
163777AK ..... Bolt Set, TR580 Pump To Bell (Round Head)(.885"OD)(6mm Allen Head)(4 Pieces) 2010-Up 1
163778AK ..... Bolt Set, TR580 Pump Halves (10mm Hex x 1.985"Long)(4 Pieces) 2010-Up 1
163779AK ..... Bolt Set, TR580 Bottom Pan (10mm Hex x .675"Long)(12 Pieces) 2010-Up 1
163780AK ..... Bolt Set, TR580 Front Seal Cover (12mm Hex x 1.150"Long)(10 Pieces) 2010-Up 1
163781AK ..... Bolt Set, TR580 AWD Tail Housing To Case (13 Pieces)(12mm Hex x 1.480"Long) 2010-Up 1
163782AK ..... Bolt Set, TR580 Valve Body To Bell Housing (10mm Hex x 4.660"Long)(9 Pieces) 2010-Up 1

© Whatever It Takes Transmission Parts. Inc.

PART #	HARD PARTS (Continued)	QTY	REFERENCE #
163783A	Bolt, TR580 Oil Tube To Reverse Clutch Housing (12mm Hex x 1.068”Long) 2010-Up	1	
163784AK	Bolt Set, TR580 Primary Pulley Front Bearing Retainer (12mm Hex x 1.160”Long)(2 Pieces) 2010-Up	1	
163785AK	Bolt Set, TR580 Cooler Filter Cover (12mm Hex x .912”Long) (2 Pieces) 2010-Up	1	
163786AK	Bolt Set, TR580 Ring Gear To Differential Housing (12 Pieces)(E20 Head x 1.635”Long) 2010-Up	1	
163787AK	Bolt Set, TR580 Reverse Housing To Pinion Retainer (6 Pieces)(14mm Hex x 1.920”Long) 2010-Up	1	
163788AK	Bolt Set, TR580 Top Cover To Case (10mm Hex x 1.075”Long) (12 Pieces) 2010-Up	1	
163789AK	Bolt Set, TR580 Park Actuator (12mm Hex x 1.470”Long)(2 Pieces) 2010-Up	1	
163790AK	Bolt Set, TR580 Pinion Retainer To Bell Housing (14 Pieces) 2010-Up	1	
163791AK	Bolt Set, TR580 Manual Valve Body (4 Pieces) 2010-Up	1	
163793AK	Bolt Set, TR580 Filter (10mm Hex x .840”Long)(3 Pieces) 2010-Up	1	
163794A	Bolt Set, TR580 Retainer Clip Differential (14mm Hex x .820”Long)(2 Pieces) 2010-Up	1	
163796A	Nut, TR580 Transfer Shaft (35mm Hex)(.515”Tall) 2010-Up	1	
163797A	Nut, TR580 Primary Pulley Front (1.320”ID)(.395”Tall) 2010-Up	1	
163797B	Nut, TR580 Primary Pulley To Case (46mm Hex)(RH Thread)(.687”Thick) 2010-Up (Also Fits TR580 Secondary Pulley (Front) 2010-Up)	1/2	
163798A	Nut, TR580 Pinion (38mm)(6 Point)(.613”Tall)(1.204”ID) 2010-Up	1	
163799AK	Bolt Set, TR580 Secondary Pulley Front Retainer (1.390”Long)(17mm Hex)(3 Pieces) 2010-Up	1	
163839A	Magnet, TR580 Bottom Pan 2010-Up	1	
163845A	Reluctor, TR580 Primary Pulley (Rear)(Cone Shaped)(35 Teeth)(2.470”Tall) 2010-Up	1	
163858A	Cushion, TR580 Forward (Beveled)(4.860”OD)(.120”Tall)(.077”Thick) 2010-Up	1	
353871A	Snap Ring, TR580 Transfer Clutch Piston Kit (1.975”OD)(.059”Thick) 2010-Up	1	
353873A	Snap Ring, TR580 Transfer Clutch Top (5.043”OD)(.058”Thick) 2010-Up	1	
163878A	Snap Ring, TR580 Forward (.098”Thick)(5.240”OD)(.218”Wide) 2010-Up	1	
163879A	Snap Ring, TR580 Forward Retainer (1.810”OD)(.060”Thick) 2010-Up	1	
163880A	Snap Ring, TR580 Input Shaft To Forward Drum (.910”OD) (.054”Thick)(Wire Type) 2010-Up	1	
163888A	Snap Ring, TR580 Planet To Oil Dam (4.130”OD)(.063”Thick) 2010-Up	1	
163889A	Snap Ring, TR580 Planet Ring Gear Hub To Ring Gear (4.860”OD)(.080”Thick)(.160”Wide) 2010-Up	1	
163892A	Snap Ring, TR580 Reverse Clutch (6.370”OD)(.111”Thick) 2010-Up	1	
163893A	Snap Ring, TR580 Reverse Piston Kit (3.735”OD)(.060”Thick) 2010-Up	1	
163896A	Snap Ring, TR580 Secondary Pulley (Front)(5.805”OD)(.056”Thick) 2010-Up	1	
353898A	Snap Ring, TR580 Front Cover To Ball Bearing On Drive Pump Sprocket (.048”Thick)(2.185”OD) (.116”Wide) 2009-Up	1	
353899A	Snap Ring, TR580 Ball Bearing To Front Cover (3.125”OD)(.047”Thick)(.156”Wide)(Stepped Ends) 2009-Up	1	
163950A	Piston, TR580 Primary Pulley Half Rear (Inner)(3.685”OD)(.805”Thick) 2010-Up	1	
163960A	Piston, TR580 Secondary Pulley (Front)(Bonded)(5.502”OD)(1.435”Tall)(Cast # KOYO BP513BK3) 2010-Up	1	
163964A	Piston, TR580 Forward (Bonded)(4.645”OD)(.612”Tall)(Cast # NOK XR1283E) 2010-Up	1	
163966A	Piston, TR580 Reverse (Bonded)(5.860”OD)(.815”Thick) (Cast # NOK XR1285E) 2010-Up	1	
353968A	Piston, TR580 Transfer Clutch (Bonded)(4.685”OD)(Cast # NOK BR6072E) 2010-Up	1	
163970-1A	Spring Seat, TR580 Secondary Pulley (3.410”OD)(.230”Thick)(2.760”ID) 2010-Up	1	
163970A	Spring, TR580 Secondary Pulley (3.270”OD)(4.020”Tall)(.265”Wire OD) 2010-Up	1	
163974A	Return Spring, TR580 Forward (3.225”OD)(.715”Tall)(Spiral) 2010-Up	1	
163976A	Retainer, TR580 Forward (Bonded)(4.215”OD)(.540”Thick) 2010-Up	1	
163977A	Return Spring, TR580 Reverse Piston (4.765”OD)(.195”Thick) 2010-Up	1	
163978A	Return Spring, TR580 Transfer Clutch (2.817”OD)(Spiral)(1.080”Tall) 2010-Up	1	
163980A	Retainer, TR580 Secondary Pulley (Front)(3.005”Tall)(5.415”OD) 2010-Up	1	
163981A	Retainer, TR580 Primary Pulley Half (Rear)(7 1/8”OD)(6 7/8”ID)(2.595”Inside Hole) 2010-Up	1	
163984A	Retainer, TR580 Forward (Bonded) (4.215”OD)(.540”Thick) 2010-Up	1	
353988A	Retainer, TR690 Transfer Clutch (Bonded)(4.460”OD)(.612”Thick)(Cast # KOYO BR5697E) 2010-Up	1	
163991-2A	Spring, TR580 Detent (.235”OD Roller)(3.560”Long) 2010-Up	1	
163991-3A	Rooster Comb, TR580 (.550”ID)(4 Detents)(.125”/.675”Thick) 2010-Up	1	
163991-4A	Shaft, TR580 Linkage (.550”OD)(3.995”Long)(2 Holes)(.165”Wide Groove) 2010-Up	1	
353991-5A	Roll Pin, TR580 Rooster Comb & Manual Lever To Linkage Shaft (.885”Long)(.205”OD) 2010-Up	2	
353991-6A	Actuator, TR580 (2 Bolts)(V Notch Tapered)(2.425”Long) 2010-Up	1	
163991-7A	Link, TR580 Manual Valve (.195”OD)(3.370”Long) 2010-Up	1	
163991-10A	C-Clip, TR580 Manual Valve To Link (.355”OD)(.024”Thick) 2010-Up	1	
353992A	Shift Lever, TR580 External (2.420”Long)(.615”Thick At Hole)(Keyway Slot) 2010-Up	1	
163994A	Park Rod, TR580 (3 Bends)(Ball & Spring 11 3/4”Long)(.845”OD Actuator)(.235”OD Rod) 2010-Up	1	
163995A	Park Pawl Assembly, TR580 (Park Pawl/Pin/Spring) 2010-Up	1	
163996A	Bolt Set, TR580 Cooler Line Banjo Fittings (2 Pieces)(19mm Hex x 1.380”Long) 2010-Up	1	

© Whatever It Takes Transmission Parts. Inc.

163999A .....Oil Tube, TR580 Pinion Housing To Front Primary Bearing (.235”/.315”OD)(2 Bends) 2010-Up ...1 .....

© Whatever It Takes Transmission Parts. Inc.

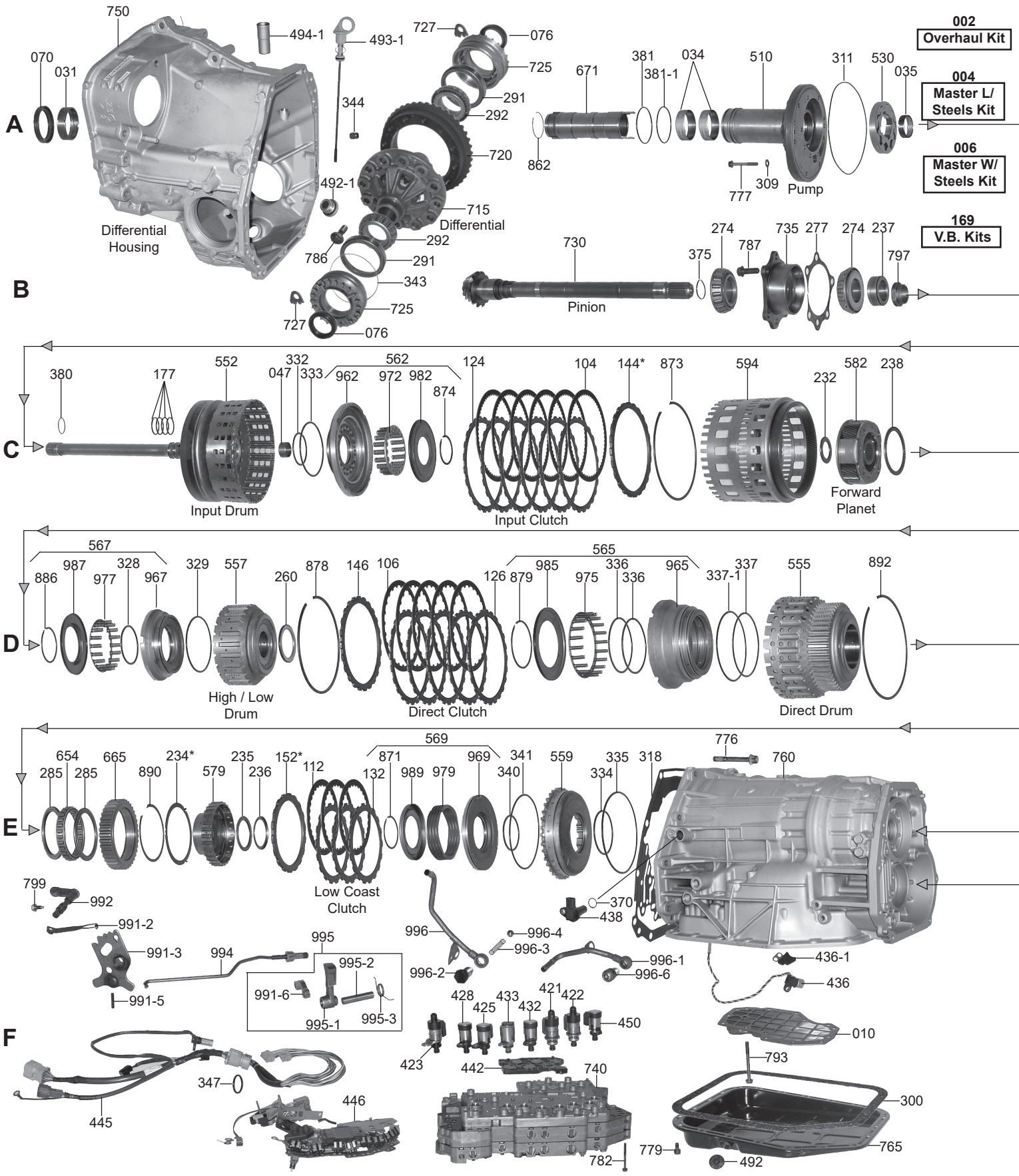

SUBARU

© Whatever It Takes Transmission Parts. Inc.

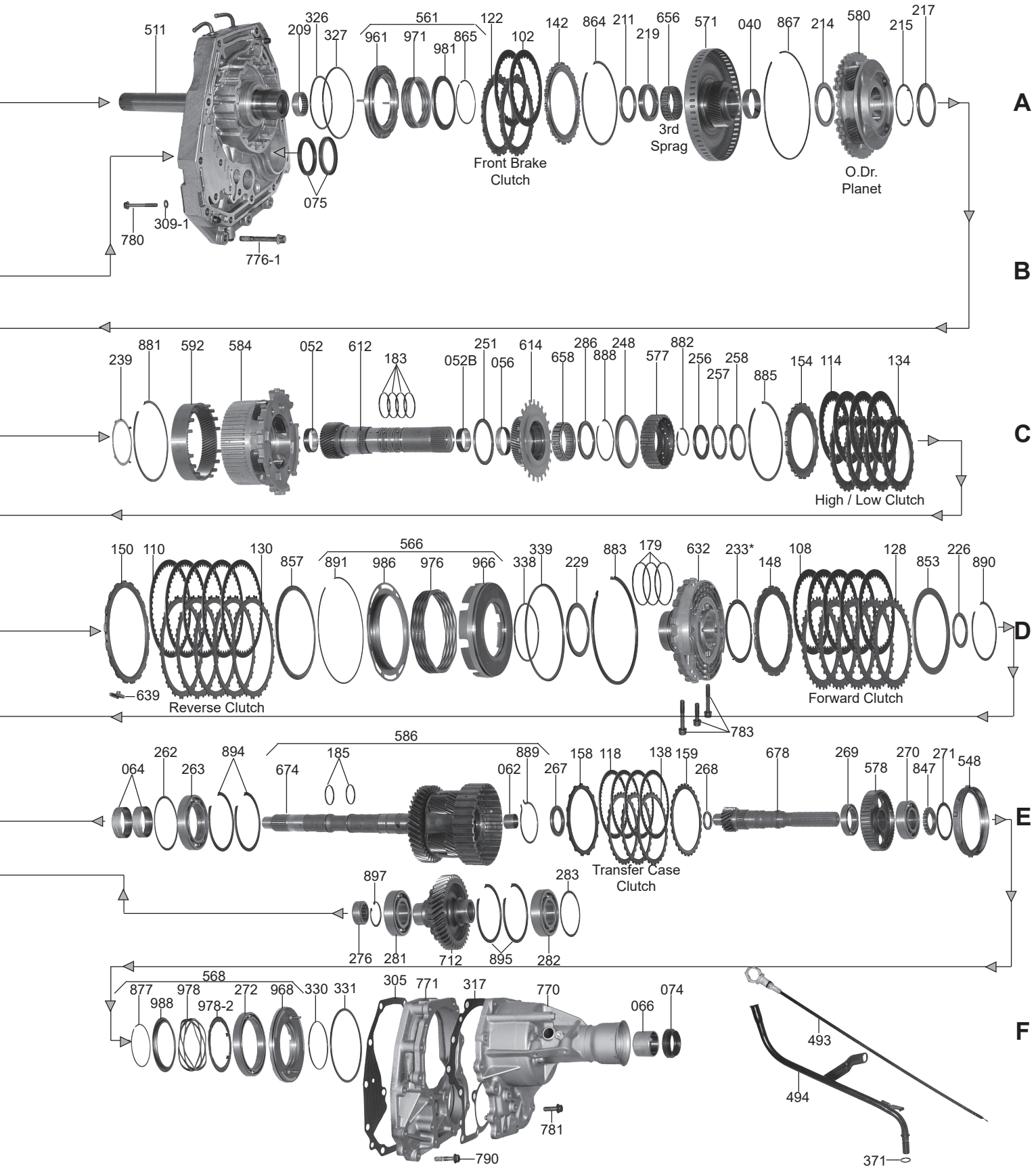

© Whatever It Takes Transmission Parts. Inc.

PART #	OVERHAUL KITS	QTY	REFERENCE #
123002A	Overhaul Kit, 5EAT (Subaru) 2005-Up (For Bonded Pistons Sell A173982AK)	1	

PART #	MASTER L/STEELS KITS	QTY	REFERENCE #
123004A	Master L/Steels Kit, 5EAT (Subaru) 2005-Up (For Bonded Pistond Sell A173982AK)	1	

PART #	MASTER W/STEELS KITS	QTY	REFERENCE #
123006A	Master W/Steels Kit, 5EAT (Subaru) 2005-Up (For Bonded Pistons Sell A173982AK)	1	
123006A	Master W/Steels Kit, 5EAT (Subaru Legacy, Outback, B9 Tribeca) 5 Speed FWD 2005-06 (For Bonded Pistons Sell A173982AK)	1	

PART #	FILTERS	QTY	REFERENCE #
123010A	Filter, 5EAT Main (16 Bolt) 2005-08	1	
123010AA	Filter, 5EAT Main (Plastic) 2009-10	1	
123010AB	Filter, 5EAT Main (Metal)(3 Bolt) 2009-10	1	

PART #	BUSHINGS	QTY	REFERENCE #
23031	Bushing, 5EAT Bell Housing (.590"Wide)(2.245"OD)(1.970"ID)(W/4 Notches) 2005-Up	1	
123034A	Bushing, 5EAT Pump Body Tube (Front & Rear)(.725"Thick)(1.875"OD) 2005-Up	2	
123035A	Bushing, 5EAT Inner Pump Gear (.410"Thick)(1.575"OD)(1.395"ID) 2005-Up	1	
173040A	Bushing, 5EAT Front Brake Clutch Hub 2005-Up	1	
173047A	Bushing, 5EAT Input Clutch Drum (Rear) 2005-Up	1	
173052A	Bushing, 5EAT Forward Sun Gear Shaft (Front)(.545"Wide)(1.240"ID)(With Dimples) 2005-Up	1	
173052B	Bushing, 5EAT Forward Sun Gear Shaft (Rear)(.390"Wide)(1.355"ID) 2005-Up	1	
173056A	Bushing, 5EAT Rear Sun Gear (1.948" ID) 2005-Up	1	
123062A	Bushing, 5EAT Intermediate Shaft/Sun Gear (.460"Thick)(.990"OD)(.850"ID) 2005-Up	1	
123064A	Bushing, 5EAT Case (Rear) (.375"Thick)(1.545"OD)(1.385"ID) 2005-Up	2	
123066A	Bushing, 5EAT Rear Extension Housing (1.378"ID)(1.652" Long) 2005-Up	1	

PART #	METAL CLAD SEALS	QTY	REFERENCE #
123070A	Seal, 5EAT Front (.390"Thick)(2.580"OD)(1.955"ID) 2005-Up	1	
123074A	Seal, 5EAT Rear (Transfer Case) (.445"Thick)(1.970"OD)(1.360"ID) 2005-Up	1	
23075	Seal, 5EAT Pinion Shaft (.235"Thick)(2.604"OD)(2.000"ID) 2005-Up	2	
123076A	Seal, 5EAT Axle (Both Sides) (.575"Thick)(1.980"OD)(1.330"ID) 2005-Up	1	

PART #	FRICTIONS	QTY	REFERENCE #
123102A	Friction, 5EAT Front Brake Clutch (Low) (.062")(30 Teeth)(5.225"OD) 2005-Up	2	
173104A	Friction, 5EAT Input Clutch (.071")(60 Teeth)(6 3/8"OD)(High Energy Eclipse) 2005-Up	6	
173106A	Friction, 5EAT Direct Clutch (.071") (24 Teeth)(6 1/4" OD)(High Energy Eclipse) 2005-Up	6	
173108A	Friction, 5EAT Forward Clutch (.061") (39 Teeth)(5.784" OD) 2005-Up	5	
173110A	Friction, 5EAT Reverse Clutch (.069") (50 Teeth) (6 5/8"OD) 2005-Up	5	
173112A	Friction, 5EAT Low Coast Clutch (.063")(30 Teeth)(5.216" OD)(High Energy Eclipse) 2005-Up	3	
173114A	Friction, 5EAT High-Low Clutch (.063")(30 Teeth)(4.915"OD)(High Energy Eclipse) 2005-Up	4	
23118AA	Friction, 5EAT Transfer Case Clutch (.071")(50 Teeth)(4.650"OD) 2005-Up	4	

PART #	STEELS	QTY	REFERENCE #
123122A	Steel, 5EAT Front Brake Clutch (.110")(18 Teeth)(4.242"ID) 2005-Up	2	
173124A	Steel, 5EAT Input Clutch (.079")(24 Teeth)(5.673"ID) 2005-Up	6	
173126A	Steel, 5EAT Direct Clutch (.094")(24 Teeth)(5.539"ID) 2005-Up	5	
173128A	Steel, 5EAT Forward Clutch (.079")(18 Teeth)(4.895"ID) 2005-Up	5	
173130A	Steel, 5EAT Reverse Clutch (.079")(18 Teeth)(5 15/16"ID) 2005-Up	5	
173132A	Steel 5EAT Low Coast Clutch (.079")(18 Teeth)(4.442"ID)(Teeth Are .535" Wide & Flat) 05-Up	3	
173132AC	Steel, 5EAT Low Coast Clutch (.079")(18 Teeth)(4.449"ID) 2005-Up	3	
173134A	Steel, 5EAT High/Low Clutch (.094")(24 Teeth)(3.735"ID)(Teeth Are .210" Wide)(Fits The Aluminum Drum) 2005-Up	4	
23138A	Steel, 5EAT Transfer Clutch (.063")(30 Teeth) 2005-Up	3	
123138B	Steel, 5EAT Transfer Clutch (.080")(30 Teeth) 2005-Up	1	

PART #	PRESSURE PLATES	QTY	REFERENCE #
123142A	Pressure Plate, 5EAT Front Brake Clutch (.148")(18 Teeth)(4.245"ID) 2005-Up	1	
173144	Pressure Plate, 5EAT Input Clutch (.156")(24 Teeth)(5.682"ID) 2005-Up	1	

© Whatever It Takes Transmission Parts. Inc.

173144A	Pressure Plate, 5EAT Input Clutch (.164")(24 Teeth)(5.682"ID) 2005-Up	1
173144AA	Pressure Plate, 5EAT Input Clutch (.172")(24 Teeth)(5.682"ID) 2005-Up	1
173144AB	Pressure Plate, 5EAT Input Clutch (.180")(24 Teeth)(5.682"ID) 2005-Up	1
173146A	Pressure Plate, 5EAT Direct Clutch (.154")(24 Teeth)(5.539" ID) 2005-Up	1
173148A	Pressure Plate, 5EAT Forward Clutch (.133")(18 Teeth)(4.895"ID) 2005-Up	1
173148AB	Pressure Plate, 5EAT Forward Clutch (.146")(18 Teeth)(4.895"ID) 2005-Up	1
173148AD	Pressure Plate, 5EAT Forward Clutch (.165")(18 Teeth)(4.895"ID) 2005-Up	1
173148AE	Pressure Plate, 5EAT Forward Clutch (.173")(18 Teeth)(4.895"ID) 2005-Up	1
173150AA	Pressure Plate, 5EAT Reverse Clutch (.165")(18 Teeth)(5 15/16" ID) 2005-Up	1
173150AB	Pressure Plate, 5EAT Reverse Clutch (.173")(18 Teeth)(5 15/16" ID) 2005-Up	1
173150AC	Pressure Plate, 5EAT Reverse Clutch (.181")(18 Teeth)(5 15/16" ID) 2005-Up	1
173150AD	Pressure Plate, 5EAT Reverse Clutch (.189")(18 Teeth)(5 15/16" ID) 2005-Up	1
173150AE	Pressure Plate, 5EAT Reverse Clutch (.197")(18 Teeth)(5 15/16" ID) 2005-Up	1
173150AF	Pressure Plate, 5EAT Reverse Clutch (.205")(18 Teeth)(5 15/16" ID) 2005-Up	1
173152A	Pressure Plate, 5EAT Low Coast Clutch (.164")(18 Teeth)(4.442"ID)(Teeth Are .535" Wide) 2005-Up	1
173152AA	Pressure Plate, 5EAT Low Coast Clutch (.172")(18 Teeth)(4.442"ID)(Teeth Are .535" Wide) 2005-Up	1
173154A	Pressure Plate, 5EAT High/Low Clutch (.163")(24 Teeth)(3.740"ID)(Teeth Are .210" Wide) (Fits The Aluminum Drum) 2005-Up	1
173154AA	Pressure Plate, 5EAT High/Low Clutch (.172")(24 Teeth)(3.740"ID)(Teeth Are .210" Wide) (Fits The Aluminum Drum) 2005-Up	1
23158B	Pressure Plate, 5EAT #158 & #159 (.143")(15 Teeth)(4.110"ID) 2005-Up	1
23158D	Pressue Plate, 5EAT #158 & #159 (.159")(15 Teeth)(4.110"ID) 2005-Up	1
123159A	Use 23158	1

PART #	VALVE BODY KITS	QTY	REFERENCE #
T123169A	Shift Kit, 5EAT (Subaru) Heavy Duty 2005-Up (Transgo)	1	

PART #	SEALING RINGS	QTY	REFERENCE #
173177AT	Use 22177AT	4	
22177AT	Ring, 5EAT Input Shaft (1.175"OD)(Teflon) 2004-Up	4	
173179AT	Ring, 5EAT Reverse Clutch (2.928" OD)(Teflon, Lap Joint) 2005-Up	3	
173183AT	Ring, 5EAT Forward Sun Gear Shaft (1.745" OD)(Teflon, Lap Joint) 2005-Up	4	
123185AT	Ring, 5EAT Intermediate Shaft (.091" Thick)(1.325"OD)(Teflon) 2005-Up	2	

PART #	WASHERS & BEARINGS	QTY	REFERENCE #
123209A	Caged Needle Bearing, 5EAT Pump Cover Plate (Stator)(Rear)(1.470"OD) (Cast # NTN 7E-HKS 33X38X12-1PX1) 2005-Up	1	
123211A	Bearing W/Race, 5EAT Pump Cover (Stator) To Front Brake Clutch Hub (.141"Thick)(2.485"OD) (1.893"ID) 2005-Up	1	
123214A	Bearing W/Races, 5EAT Transfer Case Planet To Output Shaft (.143" Thick)(2.949"OD) (2.212"ID) 2005-Up (Planet Must Be Taken Apart To Get Bearing Out)	1	
123215A	Race, 5EAT Overdrive Planet To Input Drum (.032"Thick)(2.810"OD)(2.468"ID)(W/3 Inner Tabs) 2005-Up	1	
173217A	Bearing W/Race, 5EAT Overdrive Planet To Input Drum (.110"Thick)(2.948"OD)(2.325"ID) 2005-Up,	1	
123219A	Caged Needle Bearing, 5EAT Front Brake Cluych Hub To Stator Shaft (.350"Thick)(2.495"OD) (Cast # NTN Japan NK 46.5 x 63.3 x 9) 2005-Up	1	
123233A	Use 173234A	1	
123235A	Use 173226A	1	
173226A	Bearing W/Race, 5EAT (#226 & #235)(.125" Thick)(2.355" OD)(1.787" ID) 2005-Up	1	
173229A	Bearing W/Race, 5EAT Direct Clutch Drum To Center Support (.109" Thick)(3.615" OD) (2.938" ID) 2005-Up	1	
173232A	Bearing W/Race, 5EAT Input Drum To Forward Planet (.110"Thick)(1.842"OD)(1.145"ID) 2005-Up	1	
173234A	Washer, 5EAT #233 & #234 (W/3 Outer Tabs)(.039" Thick)(4.250" OD)(3.618" ID) 2005-Up	1	
173236A	Race, 5EAT Low Coast Clutch Hub # 579 To Case (W/Shoulder)(2.258"OD)(1.788"ID) 2005-Up	1	
123237A	Spacer, 5EAT Pinion Bearing # 274 (Rear) To Nut (.700"Thick)(2.005"OD)(1.360"ID) 2005-Up	1	
173238A	Bearing W/Race, 5EAT Forward Planet To Rear Planet (.118"Thick)(3.295"OD)(2.708"ID) 2005-Up	1	
173239A	Race, 5EAT Forward Planet To Rear Planet (W/4 Outer Tabs)(.023"Thick)(3.150"OD)(2.700"ID) 2005-Up	1	
173248A	Bearing W/Races, 5EAT Rear Sun Gear To High-Low Clutch Hub (.142" Thick)(3.616" OD) (2.804" ID) 2005-Up	1	
173251A	Bearing W/Race, 5EAT Rear Planet To Rear Sun Gear (.110"Thick)(3.137"OD)(2.600"ID) 2005-Up	1	

© Whatever It Takes Transmission Parts. Inc.

PART #	WASHERS & BEARINGS (Continued)	QTY	REFERENCE #
173256A	Race, 5EAT High-Low Clutch Hub To High-Low Clutch Drum (Front)(.110" Thick)(2.366" OD) (1.752" ID) 2005-Up	1	
173257A	Bearing, 5EAT High-Low Clutch Hub To High-Low Clutch Drum (.078" Thick)(2.350" OD) (1.756" ID) 2005-Up	1	
173258A	Race, 5EAT High-Low Clutch Hub To High-Low Clutch Drum (Rear)(W/Outer Shoulder) (2.438" OD)(1.892" ID) 2005-Up	1	
173260A	Bearing W/Races, 5EAT High-Low Clutch Drum To Center Support #632 (.141" Thick) (2.618" OD)(1.916" ID)(No Shoulder) 2005-Up	1	
123262AA	Shim, 5EAT Case (Rear) To Ball Bearing # 263 (.022"Thick)(3.695"OD)(3.347"ID) 2005-Up	1	
123262AB	Shim, 5EAT Case (Rear) To Ball Bearing # 263 (.025"Thick)(3.695"OD)(3.347"ID) 2005-Up	1	
123263A	Ball Bearing, 5EAT Case (Rear) To Rear Planet (.630"Thick)(3.740"OD)(2.350"ID) (Cast # KOYO 6012R/48CS17) 2005-Up	1	
123267A	Bearing W/Races, 5EAT Transfer Case Planet To Intermediate Shaft/SunGear (.195"Thick) (2.075"OD)(1.415"ID) 2005-Up (Planet Must Be Taken Apart To Get Bearing Out)	1	
123268A	Washer, 5EAT Interm Shaft To Output Shaft(.109"Thk,1.245"OD, .875"ID)2005-Up	1	
123269A	Ball Bearing, 5EAT Output Shaft To Transfer Case Planet Housing (.388"Thick)(2.162"OD) (1.375"ID)(Cast # KOYO 6907) 2005-Up	1	
123270A	Ball Bearing, 5EAT Output Shaft To Extension Housing (.670"Thick)(2.560"OD)(1.260"ID) (Cast # KOYO 62/32R) 2005-Up	1	
123271AA	Shim, 5EAT Ball Bearing # 270 To Extension Housing (.007"Thick)(2.515"OD)(2.025"ID) 2005-Up	1	
123271AB	Shim, 5EAT Ball Bearing # 270 To Extension Housing (.011"Thick)(2.515"OD)(2.025"ID) 2005-Up	1	
123271AC	Shim, 5EAT Ball Bearing # 270 To Extension Housing (.019"Thick)(2.515"OD)(2.025"ID) 2005-Up	1	
123272A	Ball Bearing, 5EAT Transfer Clutch Piston To Apply Ring (.510"Thick)(4.330"OD)(3.335"ID) (Cast # NSK 6817B) 2005-Up	1	
123274A	Cone Brg, 5EAT Pinion To Retainer(17 Rollers)(.845"Thk,1.615"ID)(Cast # KOYO 46T0809048-1) 2005-Up	2	
123276A	Caged Needle Bearing, 5EAT Pinion Shaft To Case (Rear)(.560"Thick)(1.585"OD) (Cast # NTN 7E-HKS 29.5 X 40 X 15PX1) 2005-Up	1	
123277AA	Shim, 5EAT Pinion Retainer To Pump Cover (.006"Thick)(6 Bolt) 2005-Up	1	
123277AB	Shim, 5EAT Pinion Retainer To Pump Cover (.013"Thick)(6 Bolt) 2005-Up	1	
123281A	Ball Bearing, 5EAT Driven Transfer Gear To Case (.710"Thick)(3.070"OD)(1.535"ID) Cast # KOYO DG3978) 2005-Up	1	
123282A	Ball Bearing, 5EAT Driven Transfer Gear To Extension Housing (.710"Thick)(3.150"OD) (1.575"ID)(Cast # NSK 6208) 2005-Up	1	
123283A	Shim, 5EAT Driven Transfer Gear Bearing # 282 To Extension Housing (.020"Thick) (3.510"OD)(3.155"ID) 2005-Up	1	
173285A	End Cap Washer, 5EAT Rear Sprag (Brass)(3.639" OD)(2.895" ID) 2005-Up	2	
173286A	End Cap Washer, 5EAT 1st One Way Clutch (Brass)(2.600" OD)(1.945" ID) 2005-Up	1	
123291A	Cup Race, 5EAT Differential To Bell Housing (Both Sides)(.510"Thick)(3.150"OD)(2.485"ID) (Cast # KOYO STB4080) 2005-Up	2	
123292A	Cone Bearing, 5EAT Differential To Bell Housing (Both Sides)(17 Rollers)(1.575"ID) (Cast # KOYO STB4080) 2005-Up	2	

PART #	GASKETS & RUBBER COMPONENTS	QTY	REFERENCE #
123300A	Gasket, 5EAT (Subaru) Bottom Pan 2005-Up	1	
123305A	Gasket, 5EAT Case To Transfer Case Adapter (14 Holes) 2005-Up	1	
123309-1A	Washer/Seal, 5EAT Bolt # 780 To Pump Cover Plate (.069"Thick)(.790"OD)(.380"ID) 2005-Up	11	
123317A	Gasket, 5EAT Adapter To Transfer Case Extension Housing (15 Holes Plus 1 Large Hole) 2005-Up	1	
123318A	Gasket, 5EAT Pump Cover Plate To Case (Metal) 2005-Up	1	

PART #	ELECTRICAL COMPONENTS	QTY	REFERENCE #
123410A	PRNDL Switch, 5EAT (7 Prong Connector)(W/3 Bolt Bracket) 2005-Up	1	
123421A	Use 173421A.	1	
173421A	Solenoid, 5EAT Input Clutch # 421, Direct Clutch # 422, And High/Low Reverse Clutch #423 2005-Up) (Cast # 0 260 130 030)	1-3	
123422A	Use 173421A.	1	
123423A	Use 173421A.	1	
123425A	Use 173428A.	1	
123428A	Use 173428A.	1	
173428A	Solenoid, 5EAT TCC #425 , Line Pressure #428, Transfer #432, And Front Brake Clutch #450 2005-Up (Cast #0 260 130 031)	1-4	
123432A	Use 173428A.	1	

© Whatever It Takes Transmission Parts. Inc.

123433A ..... Solenoid, 5EAT Low Coast Brake (Is Flat W/Hole On Opposite End Of O-Rings) 2005-Up ..... 1 .....
123436-1A ..... Bracket, 5EAT (2 Bolt Holes) (Holds VSS Wire Harness To Case) 2005-Up ..... 1 .....
123436A ..... Sensor, 5EAT VSS (W/1 Hole Bracket, Bolts To Bottom Rear Of Case)(W/13"Long Harness W/3 Pin Conn) 2005-Up ..... 1 .....
123438A ..... Sensor, 5EAT ISS (W/1 Bolt Bracket)(3 Pin Connector) 2005-Up ..... 1 .....
123442A ..... Fluid Pressure Sensor/Switch, 5EAT (8 Prong Connector)(Has 5 Sensors)(Black Plastic) 2005-Up ..... 1 .....
123445A ..... Wire Harness, 5EAT Internal & External (1 Fifteen Wire & 1 Twelve Wire Green Internal Connector)(1 Twenty Prong Grey, 1 Eight Prong Brown & 1 Three Prong Black External Connector & 1 Sensor) 2005-Up ..... 1 .....
123446A ..... Wire Harness, 5EAT (Internal) (8 Two Prong, 1 Ten Prong, 1 Fifteen Prong, 1 Five Prong, 1 Seven Prong, 1 Three Prong Connector & 3 Ground Wires, 1 Three Wire Sensor, & 1 Three Wire Double Sensor) 2005-Up ..... 1 .....
123450A ..... Use 173428A ..... 1 .....

PART #	MISCELLANEOUS COMPONENTS	QTY	REFERENCE #

123492-1A ..... Drain Plug, 5EAT Bell Housing (T70 Torx Head) 2005-Up ..... 1 .....
123492A ..... Drain Plug, 5EAT Bottom Pan (Torx Plus TP50) 2005-Up ..... 1 .....
123493-1A ..... Dipstick, 5EAT (In Bell Housing)(10 3/8" Overall Length) 2005-Up ..... 1 .....
123493A ..... Dipstick, 5EAT (In Case)(20 1/4" Overall Length) 2005-Up ..... 1 .....
123494-1A ..... Dip Stick Tube, 5EAT (Goes In The Bell Housing)(2"Long) 2005-Up ..... 1 .....
123494A ..... Dip Stick Tube, 5EAT (Goes In The Case)(W/2 Brackets) 2005-Up ..... 1 .....

PART #	HARDPARTS	QTY	REFERENCE #

123510A ..... Pump Body W/Gears, 5EAT (11 Bolt)(6 1/2"Long) 2005-Up ..... 1 .....
123511A ..... Pump Cover Plate, 5EAT (Aluminum) (8 3/4" Stator Tube) 2005-Up ..... 1 .....
123530A ..... Pump Gear Set, 5EAT (.448"Thick) (9 Teeth Inner Gear W/4 Inner Slots) 2005-Up ..... 1 .....
123548A ..... Apply Ring, 5EAT Transfer Clutch To Piston (Aluminum)(9 Teeth)(.610"Thick)(3.860"ID) (Stepped ID For Ball Bearing # 272) 2005-Up ..... 1 .....
123552A ..... Drum W/Shaft, 5EAT Input Clutch (W/106 Teeth Ring Gear)(W/24 Spline Shaft, 14 3/8"Long) 2005-Up ..... 1 .....
123555A ..... Drum, 5EAT Direct Clutch (Aluminum, W/50 Teeth Clutch Hub)(Has 4 End Mill Notches Below The Steel Bore Sleeve) 2005-Up (Can Use 173555A) ..... 1 .....
173555A ..... Drum, 5EAT Direct Clutch (Aluminum)(W/50 Teeth Clutch Hub) 2005-Up ..... 1 .....
173557AB ..... Drum, 5EAT High/Low Clutch (Aluminum)(2.660"Tall Has No Steel Race On Back Of Drum) 2005-Up ..... 1 .....
123559A ..... Drum, 5EAT Low Coast Clutch (Aluminum)(3 Clutch)(Cast # 31575 VF000) 2005-Up (This Is Also The Piston For The Forward Clutch) ..... 1 .....
123561A ..... Piston Kit, 5EAT Front Brake Clutch (Alum Piston Is 1.130"Thick)(4.905"OD)(3.205"ID) (W/2 Steel Pins) 2005-Up ..... 1 .....
173562AA ..... Piston Kit, 5EAT Input Clutch (W/Aluminum Piston)(1.255"Thick) 2005-Up ..... 1 .....
173565AA ..... Piston Kit, 5EAT Direct Clutch (W/Aluminum Piston)(2.605"Thick)(6 1/8"OD) 2005-Up ..... 1 .....
173566A ..... Piston Kit, 5EAT Reverse Clutch (Aluminum Piston)(1" Thick)(6 3/8" OD) 2005-Up ..... 1 .....
173567AA ..... Piston Kit, 5EAT High/Low Clutch (Aluminum Piston)(1.225"Thick)(4.880"OD) 2005-Up ..... 1 .....
123568A ..... Piston Kit, 5EAT Transfer Clutch (Aluminum Piston .365"Thick At Edge)(Contains: # 871, 988, 978, 978-2, 968) 2005-Up ..... 1 .....
123569A ..... Piston Kit, 5EAT Low Coast Clutch (Accordian Type Spring) 2005-Up ..... 1 .....
123571A ..... Hub, 5EAT Front Brake Clutch (50 Teeht Sun Gear)(30 Teeth Clutch Hub)(With 7 7/16"OD Reluctor W/60 Slots) 2005-Up ..... 1 .....
173577A ..... Hub, 5EAT High-Low Clutch (1" Thick)(30 Tetth)(46 Internal Splines) 2005-Up ..... 1 .....
123578A ..... Clu Hub, 5EAT Transfer Clutch (50 Clutch Splines)(.720"Thick)(4.090"OD) 2005-Up ..... 1 .....
173579A ..... Clutch Hub, 5EAT Low Coast Clutch With Inner Race (W/30 Teeth Clutch Hub)(1.590" Thick) 2005-Up ..... 1 .....
173580A ..... Planet, 5EAT Overdrive (Aluminum)(4 Gear)(Uses A 50 Teeth Sun Gear #610)(28 Teeth Pinion Gears) 2005-Up ..... 1 .....
173582A ..... Planet, 5EAT Forward (4 Gear Steel)(Uses A 42 Teeth Sun Gear #612)(W/30 Internal Splines) 2005-Up ..... 1 .....
173584A ..... Planet, 5EAT Rear (4 Gear, Aluminum)(Uses A 110 Tooth Ring Gear # 594)(Uses A 62 Teeth Sun Gear # 614) 2005-Up ..... 1 .....
123586A ..... Planet, 5EAT Transfer Case (4 Gear)(Uses A 19 Teeth Sun Gear/Shaft #678 & A 35 Teeth Sun Gear/Shaft # 674) 2005-Up (Use 123586AK) ..... 1 .....
123586AK ..... Planet Assembly, 5EAT (4 Gear)(With 35 Teeth Sun Gear/Intermediate Shaft #674)(W/41 Teeth Drive Transfer Gear) 2005-Up ..... 1 .....
173592A ..... Ring Gear, 5EAT Forward Planet (78 Teeth)(W/16 Rear Lugs) 2005-Up ..... 1 .....
173594A ..... Ring Gear, 5EAT Rear Planet With Connecting Shell (W/110 Teeth Ring Gear) 2005-Up ..... 1 .....
173612A ..... Sun Gear W/Shaft, 5EAT Forward Planet (42 Teeth)(9 1/4"Long) 2005-Up ..... 1 .....
173614A ..... Sun Gear, 5EAT Rear Planet (62 Teeth)(3.410"OD Gear)(W/Outer Sprag Race) 2005-Up ..... 1 .....

© Whatever It Takes Transmission Parts. Inc.

PART #	HARDPARTS (Continued)	QTY	REFERENCE #
123632A	Center Support, 5EAT (Reverse Clutch Piston Housing)(Aluminum With A 3 Ring, 3.195" Tall Ring Tower)(W/4 Ball Plugs Under Where # 226 Bearing Rides) 2005-Up	1	
173639A	Anti Rattle Clip, 5EAT Reverse Clutch (Z Shaped)(.175"Thick)(1.160"Long)(.620"Wide) 2005-Up	1	

PART #	SPRAGS AND ONE WAY CLUTCHES	QTY	REFERENCE #
173654A	Sprag, 5EAT Rear (28 Lug)(Metal Cage)(.555" Wide) 2005-Up	1	
173656A	Sprag, 5EAT 3rd (26 Lug)(Metal Cage) 2005-Up	1	
173658A	Sprag, 5EAT 1st One Way Clutch (22 Lug)(Metal Cage)(Cage Is .680" Thick) 2005-Up	1	
173665A	Outer Race, 5EAT Rear Sprag (W/39 Teeth Clutch Hub)(.853" Wide) 2005-Up	1	

PART #	HARDPARTS (Continued)	QTY	REFERENCE #
123671A	Pump Drive Tube, 5EAT (6 3/8" Long)(W/2 Ears For Slotted Pump Gears) 2005-Up	1	
123674A	Intermediate Shaft/Sun Gear, 5EAT (15 1/8"Long)(35 Teeth Sun Gear) 2005-Up (Use 123586AK)	1	
123678A	Shaft/Sun Gear, 5EAT Output (19 Teeth Sun Gear)(9 5/16"Long) 2005-Up	1	
123690A	Parking Gear, 5EAT (16 Lugs) (Slides Onto The Driven Transfer Gear Shaft, Uses A Snap Ring To Hold It On) 2005-Up	1	
123712A	Driven Transfer Gear, 5EAT (Parking Gear Is Held On By A Snap Ring) 2005-Up	1	
123712AB	Driven Transfer Gear, 5EAT (41 Teeth)(W/16 Lug Parking Gear Made Onto The Shaft) 2005-Up	1	
123715A	Differential, 5EAT (43 Teeth Ring Gear)(12 Bolt) 2005-Up	1	
123725A	Retainer, 5EAT Differential Bearing (Both Sides)(Adjuster) 2005-Up	2	
23727E	Clip, 5EAT Holds Differential Retainer In Place (Both Sides) 2005-Up	2	
123730A	Pinion, 5EAT (12 Teeth)(18 1/2" Long) 2005-Up	1	
123735A	Retainer, 5EAT Pinion Bearing (6 Bolt)(W/Cup Races Made In) 2005-Up	1	
123740A	Valve Body, 5EAT (8 Solenoids) (Cast # 214126 On Filter Side, 21415 On Top Side) 2005-Up	1	
123750A	Bell Housing, 5EAT (10 1/2"Long)(11 Holes To Engine)(11 Threaded Holes To Case) 2005-Up	1	
123760A	Case, 5EAT (16 1/2"Long)(21 Pan Bolts)(11 Bolts To Bell) 2005-Up	1	
123765A	Pan, 5EAT Bottom (21 Bolt) (1.945" At Deep End) 2005-Up	1	
123770A	Transfer Case Extension Housing, 5EAT (Aluminum)(8 13/16"Long)(11 Bolt)(W/6 Threaded Bosses) 2005-Up	1	
123771A	Adapter, 5EAT Case To Transfer Case Extension Housing (Aluminum)(1.660"Thick)(8 Bolts To Case) 2005-Up	1	
123776-1AK	Bolt Set, 5EAT Pump Cover Plate To Bell Housing (3 Pieces) 2005-Up	1	
123776AK	Bolt Set, 5EAT Case To Bell Housing (8 Pieces) 2005-Up	1	
123777AK	Bolt Set, 5EAT Pump Body To Pump Cover (11 Pieces) 2005-Up	1	
123779AK	Bolt Set, 5EAT Bottom Pan (21 Pieces) 2005-Up	1	
123780AK	Bolt Set, 5EAT Pump Cover Plate To Case (6 Pieces) 2005-Up	1	
123781AK	Bolt Set, 5EAT Transfer Case Extension Housing To Adapter (11 Pieces) 2005-Up	1	
123782AK	Bolt Set, 5EAT Valve Body To Case (9 Pieces) 2005-Up	1	
123783AK	Bolt Set, 5EAT Center Support To Case (3 Pieces) 2005-Up	1	
123786AK	Bolt Set, 5EAT Differential Houisng To Ring Gear (12 Pieces) 2005-Up	1	
123787AK	Bolt Set, 5EAT Pinion Retainer To Pump Cover (6 Pieces) 2005-Up	1	
123790AK	Bolt Set, 5EAT Adapter To Case (8 Pieces) 2005-Up	1	
123791AK	Bolt Set, 5EAT Holds Internal Wire Harness Plate & SolenoidsTo Valve Body (20 Pieces) 2005-Up	1	
123793AK	Bolt Set, 5EAT Main Filter (16 Pieces) 2005-Up	1	
23797A	Nut, 5EAT Holds Pinion Bearing To Shaft (38mm Head) 2005-Up	1	
123799A	Retaining Bolt, 5EAT Holds Manual Lever In Case (10mm Hex Head)(.775"Long W/Pilot Tip) 2005-Up	1	
123847A	Reluctor, 5EAT (22 Teeht)(.242"Thick)(1.140"ID) 2005-Up	1	
173853A	Cushion, 5EAT Forward Clutch (.094")(5.878"OD)(4.830"ID) 2005-Up	1	
123857A	Cushion, 5EAT Reverse Clutch (.079"Thick)(Dished)(6 11/16"OD) 2005-Up	1	
123862A	Snap Ring, 5EAT Pump Drive Tube (Front) 2005-Up	1	
123864A	Snap Ring, 5EAT Holds Front Brake Clutch Pressure Plate In (.071"Thick)(5.655"OD) 2005-Up	1	
123865A	Snap Ring, 5EAT Holds Front Brake Clutch Retainer In (.038"Thick)(2.960"OD) 2005-Up	1	
173867A	Snap Ring, 5EAT Holds Overdrive Planet To Shell # 594 (.078" Thick)(7 3/16" OD)(6 15/16" ID) 2005-Up (Some Have Hooked Ends, Some Don't, All Retro-Fit)	1	
173871A	Snap Ring, 5EAT Holds Low Coast Clutch Springs In (.047" Thick)(2.268" OD)(2.002" ID) 2005-Up	1	
173873A	Snap Ring, 5EAT Holds Input Clutch Pressure Plate In (.079" Thick)(6 3/4" OD)(6 3/8" ID) 2005-Up	1	
173874A	Snap Ring, 5EAT Holds Input Clutch Retainer In (.063" Thick)(2.008" OD)(1.736" ID) 2005-Up	1	
123877A	Snap Ring, 5EAT Holds Transfer Clutch Spring Retainer In (.046"Thick)(2.925"OD) 2005-Up	1	
173878A	Snap Ring, 5EAT Holds Direct Clutch Pressure Plate In (.086" Thick)(6 11/16" OD) 2005-Up	1	
173878AA	Snap Ring, 5EAT Holds Direct Clutch Pressure Plate In (.094" Thick)(6 11/16" OD) 2005-Up	1	
173878AB	Snap Ring, 5EAT Holds Direct Clutch Pressure Plate In (.102" Thick)(6 11/16" OD) 2005-Up	1	

© Whatever It Takes Transmission Parts. Inc.

173879A ..... Snap Ring, 5EAT Holds Direct Clutch Retainer In Drum (.062” Thick)(3.257” OD)(2.984” ID) 2005-Up 1
173881A ..... Snap Ring, 5EAT Holds Forward Planet Ring Gear To The Aluminum Rear Planet (.063” Thick) ..... (5.475” OD)(5.096” ID) 2005-Up 1
173882A ..... Snap Ring, 5EAT Holds High-Low Clutch Hub To Forward Sun Gear Shaft (.079” Thick) ..... (1.916” OD)(1.638” ID) 2005-Up 1
173883A ..... Snap Ring, 5EAT Holds Center Support In Case (.158” Thick)(7 1/4” OD)(6 5/8” ID) 2005-Up 1
173885A ..... Snap Ring, 5EAT Holds High-Low Clutch Pressure Plate In (.078” Thick)(5.322” OD)(4.935” ID) 2005-Up 1
173886A ..... Snap Ring, 5EAT Holds High-Low Clutch Retainer In (.054”Thick)(2.483”OD)(2.208”ID) 2005-Up 1
173888A ..... Snap Ring, 5EAT Holds 1st One Way Clutch Hub In Rear SunGear (.038” Thick)(2.789” OD) ..... (2.479” ID) 2005-Up 1
123889A ..... Snap Ring, 5EAT Holds Pinion Pins In Transfer Case Planet (.042”Thick)(2.770”OD)(W/Bent ..... Ends) 2005-Up 1
173890A ..... Snap Ring, 5EAT Holds Rear Sprag To Outer Race (.037” Thick)(3.935” OD) 2005-Up 2
173891A ..... Snap Ring, 5EAT Holds Reverse Clutch Spring In (.047” Thick)(7 3/16” OD)(6 7/8” ID) 2005-Up . 1
173892A ..... Snap Ring, 5EAT Holds Reverse Clutch Pressure Plate In Case (.078”Thick)(7 3/16” OD) ..... (6 3/4” ID) 2005-Up 1
123894A ..... Snap Ring, 5EAT Inside Of The Drive Transfer Gear (.082”Thick)(3.983”OD) 2005-Up (Also ..... Fits 5EAT Inside Of The Driven Transfer Gear # 895 2005-Up)..... 2-4
123895A ..... Use 123894A..... 2
123897A ..... Snap Ring, 5EAT Holds Needle Bearing In Case (.073”Thick)(1.680”OD)(W/2 Eyelets) 2005-Up 1
123899A ..... Snap Ring, 5EAT Holds Parking Gear To Driven Transfer Gear Shaft (W/2 Eyelets) 2005-Up 1
123961A ..... Piston, 5EAT Front Brake Clutch (Aluminum)(1.130”Thick)(4.905”OD)(3.205”ID)(W/2 Steel ..... Pins) 2005-Up 1
173962AA..... Piston, 5EAT Input Clutch (Aluminum)(1.255”Thick)(6 3/8”OD) 2005-Up 1
173965AA..... Piston, 5EAT Direct Clutch (Aluminum)(2.605”Thick)(6 1/8”OD) 2005-Up 1
173966A ..... Piston, 5EAT Reverse Clutch (Aluminum) (1.015” Thick)(Uses An Outer D-Ring) 2005-Up..... 1
173967AA..... Piston, 5EAT High/Low Clutch (Aluminum)(1.225”Thick)(4.880”OD) 2005-Up 1
123968A ..... Piston, 5EAT Transfer Clutch (Aluminum)(.365”Thick At The Edge)(5.030”OD)(2.950”ID) 2005-Up 1
123969A ..... Piston, 5EAT Low Coast Clutch (Aluminum)(5.170”OD)(2.255”ID)(Uses Accorsian Type Spring) 2005-Up 1
123971A ..... Spring, 5EAT Front Brake Clutch Return (.630”Thick)(3.460”OD)(2.910”ID)(Spiral) 2005-Up..... 1
173972A ..... Springs, 5EAT Input Clutch Return (18 Springs W/Retainer) 2005-Up 1
173975A ..... Springs, 5EAT Direct Clutch Return (W/Retainer)(20 Springs) 2005-Up 1
173976A ..... Spring, 5EAT Reverse Clutch (Wavy)(Coiled)(5 5/8” OD) 2005-Up..... 1
173977A ..... Springs, 5EAT High-Low Clutch Return (W/Retainer)(18 Springs) 2005-Up 1
123978-2A..... Spring Washer, 5EAT Transfer Clutch Spring Bottom Retainer (.032”Thick)(3.730”OD)(3.020”ID) ..... (6 Inner Tabs) 2005-Up 1
123978A ..... Spring, 5EAT Transfer Clutch Return (.720”Thick)(3.510”OD)(Accordian Type) 2005-Up..... 1
123979A ..... Spring, 5EAT Low Coast Clutch Return (3.705”OD)(AccordianType) 2005-Up 1
123981A ..... Retainer, 5EAT Front Brake Clutch Return Spring (.195”Thick)(3.655”OD)(2.888”ID) 2005-Up..... 1
173982A ..... Retainer,5EAT Input Clutch Return Spring (W/Bonded Rubber)(4 5/16” OD) 2005-Up..... 1
173982AK..... Retainer/Piston Kit, 5EAT (W/Bonded Rubber) 2005-Up (Contains: # 982, 985 & 987)..... 1
173985A ..... Retainer, 5EAT Direct Clutch Spring (W/Bonded Rubber)(5”OD) 2005-Up 1
173986A ..... Retainer, 5EAT Reverse Clutch Spring (6 11/16” OD) 2005-Up 1
173987A ..... Retainer, 5EAT High-Low Clutch Spring (W/Bonded Rubber)(4 3/16”OD) 2005-Up..... 1
123988A ..... Retainer, 5EAT Transfer Clutch Spring (.228”Thick)(3.630”OD)(2.950”ID) 2005-Up 1
123989A ..... Retainer, 5EAT Low Coast Clutch Return Spring (3.870”OD)(Accordian Type Single Spring) 2005-Up 1
123991-2 ..... Spring, 5EAT Rooster Comb Detent (1 Bolt To Case) 2005-Up..... 1
123991-3A..... Rooster Comb, 5EAT (W/4 Detent Notches) 2005-Up..... 1
123991-5A..... Roll Pin, 5EAT Holds Rooster Comb To Manual Lever Shaft (.880”Long) 2005-Up 1
123992A ..... Manual Lever, 5EAT (External) (Lever Has 1 Linkage Stud) 2005-Up..... 1
123994A ..... Park Rod Actuator, 5EAT (12” Long) 2005-Up 1
123995A ..... Park Pawl Assembly, 5EAT (Contains: # 995-1, 995-2, 995-3, 991-6) 2005-Up..... 1
123996-1A..... Banjo Fitting, 5EAT Cooler Line (Top)(W/1 Hole Bracket) 2005-Up..... 1
123996-2A..... Bolt, 5EAT (Banjo)(Holds Bottom Cooler Line To Case)(21mm Hex Head) 2005-Up 1
123996-3A..... Spring, 5EAT Under Bottom Cooler Line Fitting In Case (.345”OD)(1.890”Long) 2005-Up..... 1
123996-4A..... Check Ball, 5EAT Under Bottom Cooler Line Fitting In Case (.435”OD) 2005-Up..... 1
123996-6A..... Bolt, 5EAT (Banjo)(Holds Top Cooler Line To Case)(Tork Plus Head) 2005-Up 1
123996A ..... Banjo Fitting, 5EAT Cooler Line (Bottom)(W/2 Hole Bracket) 2005-Up 1

© Whatever It Takes Transmission Parts. Inc.

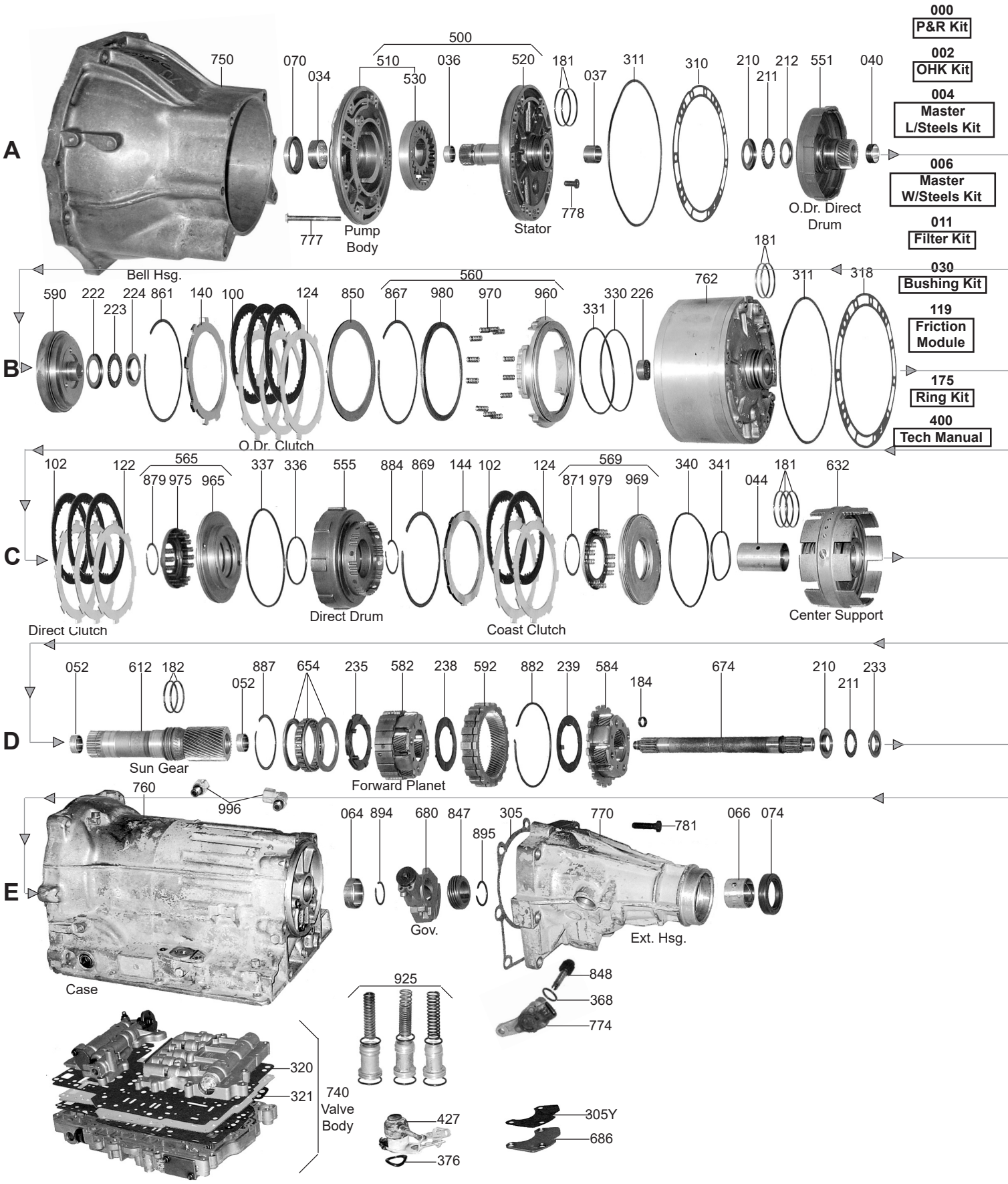
A
B
C
D
E
750
Bell Hsg.
070
034
500
510
530
036
520
181
037
311
310
210
211
212
551
040
O.Dr. Direct Drum
777
Pump Body
Stator
778
181
560
590
222
223
224
861
140
100
124
850
867
980
970
960
331
330
226
762
311
318
O.Dr. Clutch
102
122
565
879
975
965
337
336
555
884
869
144
102
124
569
871
979
969
340
341
044
181
632
Direct Clutch
Direct Drum
Coast Clutch
Center Support
052
612
182
887
654
235
582
238
592
882
239
584
184
674
210
211
233
Sun Gear
Forward Planet
760
996
064
894
680
847
895
305
770
781
066
074
Gov.
Ext. Hsg.
Case
925
848
368
774
320
321
740
Valve
Body
427
376
305Y
686
000
P&R Kit
002
OHK Kit
004
Master
L/Steels Kit
006
Master
W/Steels Kit
011
Filter Kit
030
Bushing Kit
119
Friction
Module
175
Ring Kit
400
Tech Manual

TOYOTA

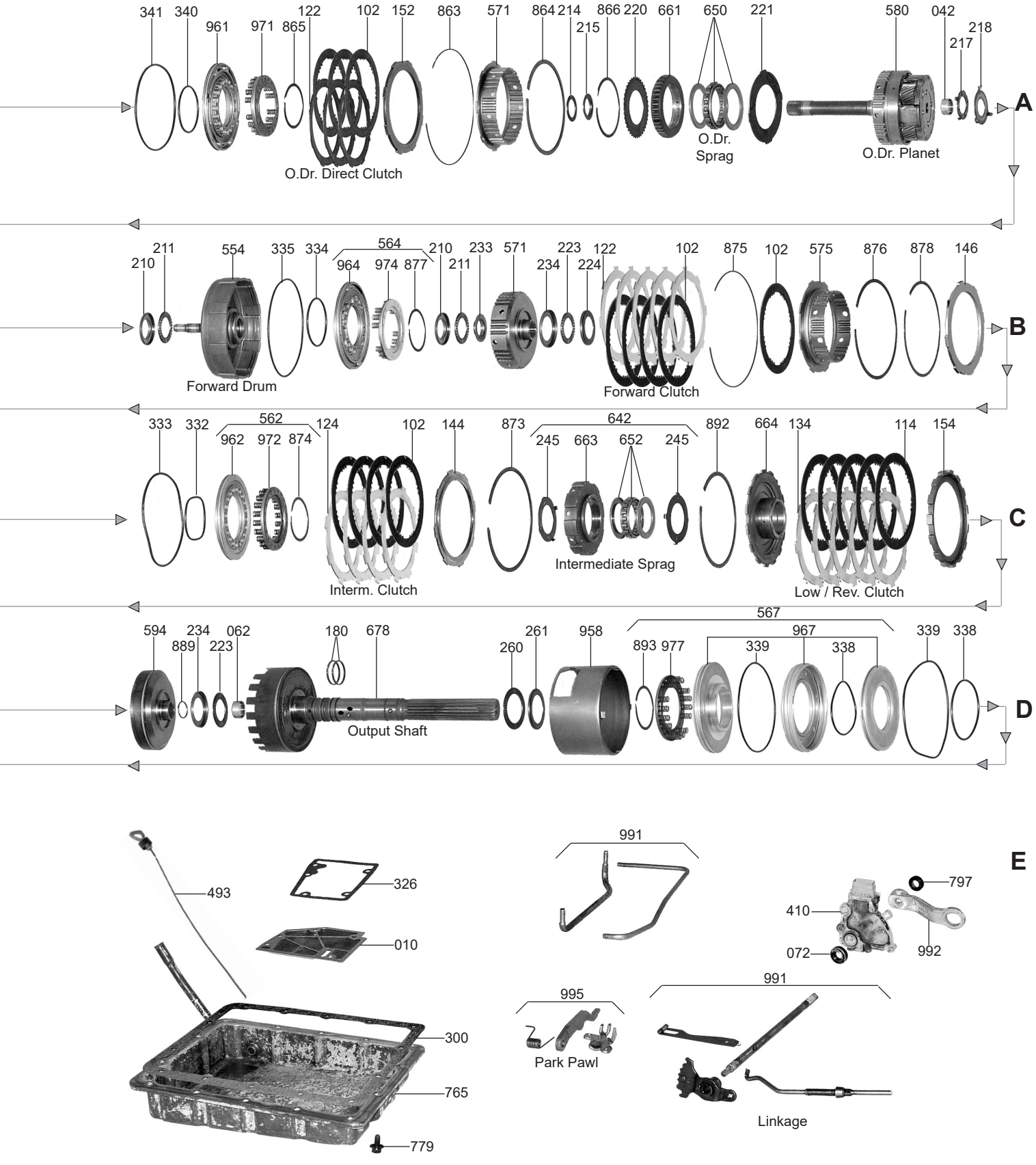

TOYOTA

© Whatever It Takes Transmission Parts. Inc.

PART #	PAPER & RUBBER KIT	QTY.	REFERENCE #
57000A	Paper & Rubber Kit, A40/A41/A43/AW55 1973-Up	1	
57000CB	Paper & Rubber Kit, AW70/AW71/AW72 1982-Up	1	
57000CC	Paper & Rubber Kit, A40D/A42D/A43D/A44D 1976-Up	1	
57000EC	Paper & Rubber Kit, A42DL/A43DE/A43DL/A44DE/A44DL/A45DL/A46DE 1982-Up	1	
57000Y	Paper & Rubber Kit, BW55 (Volvo) 1974-81	1	

PART #	OVERHAUL KITS	QTY.	REFERENCE #
57002A	Overhual Kit, A40/A41/A43/AW55 1973-Up	1	
57002CB	Overhuaul Kit, AW70/AW71/AW72 1982-Up	1	
57002CC	Overhaul Kit, A40D/A42D/A43D/A44D 1976-Up	1	
57002EC	Overhaul Kit, A42DL/A43DE/A43DL/A44DE/A44DL/A45DL/A46DE 1982-Up	1	
57002Y	Overhaul Kit, BW55 (Volvo) 1974-81	1	

PART #	MASTER L/STEEL KIT	QTY.	REFERENCE #
57004A	Master L/Steels Kit, A40/A41/A43/AW55 1973-Up	1	
57004CB	Master L/Steels Kit, AW70/AW71/AW72 1982-Up	1	
57004CC	Master L/Steels Kit, A40D/A42D/A43D/A44D 1976-Up	1	
57004HC	Master L/Steels Kit, A42DL/A43DE/A43DL/A44DE/A44DL/A45DL 8/1981-Up	1	
57004P	Master L/Steels Kit, A46DE/A46DF 1990-95	1	
57004Y	Master L/Steels Kit, BW55 (Volvo) 1974-81	1	

PART #	MASTER W/STEEL KIT	QTY.	REFERENCE #
57006A	Master W/Steels Kit, A40/A41/A43/AW55 1973-Up	1	
57006CB	Master W/Steels Kit, AW70/AW71/AW72 1982-Up	1	
57006CC	Master W/Steels Kit, A40D/A42D/A43D/A44D 1976-Up	1	
57006HC	Master W/Steels Kit, A42DL/A43DE/A43DL/A44DE/A44DL/A45DL 8/1981-Up	1	
57006P	Master W/Steels Kit, A46DE/A46DF 1990-95	1	
57006Y	Master W/Steels Kit, BW55 (Volvo) 1974-81	1	

PART #	FILTER	QTY.	REFERENCE #
57010A	Filter, A40/A41/A43/AW55/BW55 1972-82	1	35303-22020
57010C	Filter, A40D 1978-Up	1	35303-30031
57010D	Filter, A42D/A43D/AW70/AW71 (.345” Thick)	1	35303-30050
57010DA	Filter, A43D (Toyota/Lexus) 1/2002-9/2004 (.590”Thick At The Pick-Up Rim)	1	
57010E	Filter, A42DL/A43DL/A44DL/A45DL/A45DF 1982-Up	1	35303-14010
57010H	Filter, A43DE/A44DE/A46DE 1983-Up	1	35303-30060

PART #	FILTER KIT	QTY.	REFERENCE #
57011A	Filter Kit, A40/A41/A43/AW55/BW55 1972-82	1	
57011C	Filter Kit, A40D 1978-Up	1	
57011D	Filter Kit, A42D/A43D/AW70/AW71 1981-Up	1	
57011E	Filter Kit, A42DL/A43DL/A44DL/A45DL/A45DF 1982-Up	1	
57011H	Filter Kit, A43DE/A46DE 1983-Up	1	

PART #	BUSHINGS	QTY.	REFERENCE #
57030A	Bushing Kit, A40/A41/A43/AW55/BW55	1	
57030D	Bushing Kit, A40D/A42D/A42DL/A43D/A43DE/A43DL/A44D/A44DL/A45DF/A45DL/A46DE	1	K57902B
57034A	Bushing, A40 Series Pump Body (1.500”ID)(Brass With Oil Pockets)	1	
57036A	Bushing, A40 Series Stator (Front & Rear) .848”ID (.384” Wide) (Babbit) (Also Fits Sun Gear Shaft)	1-4	
57036B	Bushing, A40 Series Stator (Front & Rear) .848”ID (.680” Wide) (Babbit)	1-2	
57036C	Bushing, A40 Series Stator (Front & Rear) .848”ID (.680” Wide) (Bronze) (Also Fits Sun Gear Shaft)	1-4	
57036CA	Bushing, A40 Series Stator (Front & Rear) .864”ID (.384” Wide)	1-2	
57036CB	Bushing, A40 Series Stator (Front & Rear) .856”ID (.680” Wide)	1-2	
57037E	Bushing, A42DL/A43DL/A43DE/A44DL Stator (Rear) .908”ID (.680” Wide)	1	
57040C	Bushing, A40 Series Overdrive Drum (Front) .909”ID (.380” Wide) (No Groove)	2	57003
57040J	Bushing, A40 Series Overdrive Drum (Front) .915”ID (.380” Wide) (With Groove)	2	
57042C	Bushing, A40 Series Overdrive Planet (Pilot) .438”ID	1	
57044A	Bushing, A40 Series Center Support 1.434”ID (1.040” Wide)	1	
57044C	Bushing, A40D Center Support 1.434”ID (.735” Wide)	1	
57044CA	Use 57226C	1	

TOYOTA

© Whatever It Takes Transmission Parts. Inc.

57052A	Bushing, A40 Series Sun Gear Shaft .848"ID (.384" Wide) (Use 57036A)	2	
57052J	Bushing, A44D Sun Gear Shaft .848"ID (.680" Wide) (Use 57036C)	2	
57062A	Bushing, A40 Series Output Shaft .710"ID (.380" Wide)	1	
57064A	Bushing, A40 Series Case (1.500"ID) (Babbit, Smooth)	1	
119066	Bushing, A40 (Volvo) Extension Housing (1.510"OD)(1.380"ID)(1.210" Long)(Babbit)	1	
57066A	Bushing, A40 Series Extension Housing 1.500"ID (1.184" Wide)	1	90999-72020
57066AE	Bushing, A40/A41/A42D/A42DL Extension Housing (Isuzu)	1	
57066J	Bushing, A44D/A44DL Extension Housing (1.507"ID)	1	

PART #	METAL CLAD SEALS	QTY.	REFERENCE #
57070A	Seal, All A40 Series (Front)	1	90311-38020
60072	Seal, All A40 Series Linkage	2	90311-11128
57074A	Seal, A40 Series Rear With Felt (38mmX58mmX11mm)	1	90311-38005
97074A	Seal, A40 Series Rear (Without Felt) (38x58x11mm)	1	
57074AD	Seal, A40/A42D/A43D Rear (Isuzu) (35mmX49.2mmX11mm) 1981-85	1	5-09625-009-0
97074C	Seal, AW71 (Volvo 1992-04) (42mm x 55mm x 11mm)	1	
57074D	Seal, A42D/A42DL Rear (Isuzu) (38.5mmX49.2mmX8mm) 1986-Up	1	8-94155-373-0
57074J	Seal, A44D/A44DL Rear (Mitsubishi, Dodge D50) (39.5mmX57.1mmX13.2mm)	1	MD951482
29074	Seal, AW55/BW55/AW70/AW71 Rear (Volvo) (36mm X 49.5mm X 11mm)	1	235728-3
57078A	Seal, All A40 (Toyota) Series Speed-O Shaft	1	90310-09001
57078Y	Seal, BW55 (Volvo) Speed-O Shaft	1	380192-5

PART #	FRICTION CLUTCH	QTY.	REFERENCE #
67100A	Friction, A40 Series Overdrive Clutch .067" (5.60"OD) (33 Teeth) 1982-Up	3	35677-32040
57102A	Friction, A40 Series Intermediate Clutch (Brake #2) .079" (5.00"OD) (24 Teeth) 1985-Up	2-3	35677-22060
57102AA	Friction, A40 Series Forward/Direct/Coast/Intermediate/Overdrive/Overdrive Direct Clutch .091" (5.00"OD) (24 Teeth)	11-17	35677-22010
57102AB	Friction, A40 Series Forward/Direct Clutch .091" (5.00"OD) (24 Teeth) (Waved)	3-6	
57102AC	Friction, A40 Series Forward/Direct Clutch .091" (5.00"OD) (16 Teeth) (Waved)	3-6	
57102B	Friction, A40 Series Overdrive Direct Clutch .091" (5.60"OD) (33 Teeth) 1979-81	3	35677-30010
57102C	Friction, A40 Series Overdrive Direct Clutch .067" (5.60"OD) (33 Teeth) 1982-Up (Use 67100A)	3	35677-32040
67100A	Friction, A40 Series Overdrive Direct Clutch .067" (5.60"OD) (33 Teeth) 1982-Up	3	35677-32040
57114A	Friction, A40 Series Low/Reverse Clutch .091" (5.00"OD) (16 Teeth) 1973-Up	4-5	35633-30060
57114AB	Friction, A40 Series Low/Reverse Clutch .091" (5.00"OD) (16 Teeth) (Waved) 1973-UP	1	
57119A	Friction Module, A40/A41/A43/AW55 3 Speed 1973-Up	1	
57119C	Friction Module, A40D/A43D 4 Speed 1982-87	1	

PART #	STEEL CLUTCH	QTY.	REFERENCE #
57122A	Steel, A40 Series Forward/Direct/Overdrive Direct Clutch (.079") (4.00"ID) (8 Short Teeth) 1980-Up	8-10	35634-30070
57122AA	Steel, A40 Series Forward/Direct/Overdrive Direct Clutch (.071") (4.00"ID) (8 Short Teeth) 1973-Up	8-10	35634-22070
57122AB	Steel, A40 Series Forward/Direct Clutch .055" (4.00"ID) (8 Short Teeth) 1981-Up	1-2	35634-30090
57122Q	Steel, A46DE/A46DF Overdrive Direct Clutch .055" (4.00"ID) (8 Teeth) (Dished) 1990-Up	1	34618-30010
57122QA	Steel, A46DE/A46DF Forward/Direct Clutch .091" (4.00"ID) (8 Teeth) 1990-Up	AR	35634-30120
57122QB	Steel, A40 Series Forward/Direct Clutch .055" (4.00"ID) (8 Teeth)	3-6	
57124A	Steel, A40 Series Coast (Brake #1)/ Intermediate (Brake #2) Clutch (.079") (4.00"ID) (8 Tall Teeth)	2-6	35648-30010
57124AA	Steel, A40 Series Coast (Brake #1)/ Intermediate (Brake #2) & Overdrive Clutch (.071") (4.00"ID) (8 Tall Teeth)	5-10	35634-22090
57124B	Steel, A40 Series Intermediate (Brake #2) Clutch (.092") (4.00"ID) (8 Tall Teeth) 1980-Up	3	35648-30020
57124C	Steel, A40 Series Intermediate (Brake #2) Clutch .118" (4.00"ID) (8 Teeth) 1985-Up	2	35648-22010
57124D	Steel, A40 Series Overdrive Clutch .079" (4.60"ID) (7 Teeth) 1981-Up	2	35634-30080
57124E	Steel, A40 Series Overdrive Clutch .091" (4.60"ID) (7 Teeth)	1-3	35634-30010
57134A	Steel, A40 Series Low/Reverse Clutch .071" (4.00"ID) (15 Teeth)	5	35634-22080

PART #	CLUTCH PRESSURE PLATES	QTY.	REFERENCE #
57140A	Pressure Plate, A40D Series Overdrive Clutch	1	
57144A	Pressure Plate, A40 Series Coast & Intermediate Clutch	2	
57146A	Pressure Plate, A40 Series Direct Clutch	1	
57152A	Pressure Plate, A40 Series Overdrive Direct Clutch	1	
57154A	Pressure Plate, A40 Series Low/Reverse Clutch (Bottom)	1	

© Whatever It Takes Transmission Parts. Inc.

PART #	OIL SEALING RINGS	QTY.	REFERENCE #
57175A	Ring Kit, A40/A41/A43/AW55/BW55 (Metal) 1972-84	1	
57175C	Ring Kit, A40D/A42D/A42DL/A42DE/A43D/A43DE/A43DL/A44DL/A45DL/A46DE (Metal)	1	
57175Y	Ring Kit, BW55 (Metal)	1	
57180A	Ring, A40 Series Output Shaft (1.312”OD) (Metal)	3	35735-22010
57181A	Ring, A40/A41/A43 Forward Drum (2.029”OD) (Metal) 1973-81	2	35617-22010
57181AA	Ring, A40 Series Forward/Direct/Overdrive Drum (2.029”) (Metal) 1973-81	2-7	35617-22020
57181AB	Ring, A40 Series Forward/Direct/Overdrive Drum (2.046”OD) (Metal) 1981-Up (Use 157179)	2-7	
157179	Ring, A40 Series Forward/Direct/Overdrive Drum (2.046”OD) (Metal) 1981-Up	2-7	
57182A	Ring, A40 Series Sun Gear (1.500”OD) (Metal)	2	
57182AA	Ring, A40 Series Sun Gear (1.752”OD) (Metal)	2	35749-30010
57182Y	Ring, BW55 Sun Gear (Metal)	1	
57184C	Ring, A40 Series Intermediate Shaft (.055”OD) (Metal)	1	35748-30010
57184CT	Ring, A40 Series Intermediate Shaft (.055”OD) (Teflon)	1	

PART #	WASHERS & BEARINGS	QTY.	REFERENCE #
57210A	Race, A40D/A42D/A43D Stator To Overdrive Drum (Front); A40 Series Support To Forward Drum (Front);A40 Series Forward Drum To Forward Hub (Front); A40/A41/A43/A40D/A42D/A42DL Sun Gear To Rear Ring Gear (Front)	1-4	
57211A	Bearing, A40D/A42D/A43D Stator To Overdrive Drum; A40 Series Support To Forward Drum; A40 Series Forward Drum To Forward Hub; A40/A41/A43/A40D/A42D /A42DL/A43D/A43DE/A43DL Sun Gear To Rear Ring Gear	1-4	
57211E	Bearing W/Race, A42DL/A43DE/A43DL/A44D/A44DL Stator To Overdrive Drum	1	
57211J	Bearing W/Race, A44D/A44DL Sun Gear To Rear Ring Gear	1	
57212C	Race, A40D/A42D/A43D Stator To Overdrive Drum (Rear)	1	
57212E	Race, A42DL/A43DE/A43DL/A44D/A44DL Stator To Overdrive Drum (Rear)	1	
57214E	Bearing, A42DL/A43D/A43DE/A43DL/A44D/A44DL Overdrive Planet To Overdrive Drum (For 33 Teeth Sun Gear)	1	
57214R	Bearing W/Race, A44DL Overdrive Planet To Overdrive Drum (For 27 Teeth Sun Gear)	1	
57215E	Race, A42DL/A43D/A43DE/A43DL/A44D/A44DL Overdrive Planet To Overdrive Drum (For 33 Teeth Sun Gear)	1	
57217C	Washer, A40D/A42D/A42DL/A43/A43DE/A43DL/A44D/A44DL Overdrive Planet To Overdrive Ring Gear (4 Tab)	1	
57218C	Race, A40D/A42D/A42DL/A43/A43DE/A43DL/A44D/A44DL Overdrive Planet To Overdrive Ring Gear (3 Tab)	1	
57220C	Washer, A40D/A42D Overdrive Sprag (Front)	1	
57220E	Washer, A42DL/A43D/A43DE/A43DL/A44D/A44DL Overdrive Sprag (Front)	1	
57221C	Washer, A40D/A42D Overdrive Sprag (Rear)	1	
57221E	Washer, A42DL/A43D/A43DE/A43DL/A44D/A44DL Overdrive Sprag (Rear)	1	
57222C	Race, A40D/A42D/A42DL/A43/A43DE/A43DL/A44D/A44DL Overdrive Ring Gear To Overdrive Case (Front)	1	
57223C	Bearing, A40D/A42D/A42DL/A43/A43DE/A43DE/A43DL/A44D/A44DL Overdrive Ring Gear To Overdrive Case; A40 Series Forward Hub To Sun Gear ; A40 Series Rear Ring Gear To Output Shaft	1-3	
57224C	Race, A40D/A42D/A42DL/A43/A43DE/A43DL/A44D/A44DL Overdrive Ring Gear To Overdrive Case (Rear); A40 Series Forward Hub To Sun Gear (Rear)	1-2	
57226C	Caged Needle Bearing, A40D/A42D/A43D/A43DL/A43DE/A44D/A44DL Overdrive Case To Forward Drum 1978-Up	1	
57233A	Race, A40 Series Forward Drum To Forward Hub (Rear)	1	
57234A	Race, A40 Series Forward Hub To Sun Gear (Front); A40 Series Rear Ring Gear To Output Shaft (Front)	1-2	
57235A	Washer, A40/A40D/A42D/A42DL Front Planet (2.760”OD) (2 Tab, Plastic)	1	
57235B	Washer, A41/A44D/A44DL Front Planet (2.860”OD) (1.560”ID) (2 Tab, Plastic)	1	
57235S	Washer, A43/A43D/A43DE/A43DL Front Planet (2.875”OD) (4 Tab, Plastic)	1	
57235Y	Washer, BW55 Front Planet (2.860”OD) (1.855”ID) (2 Tab, Plastic)	1	
57238A	Washer, A40/A40D/A41/A42D/A42DL/A44D/A44DL Front Planet (Rear) (2.875”OD) (4 Tab, Steel)	1	
57238S	Washer, A43/A43D/A43DE/A43DL Front Planet (Rear) (2.955”OD) (4 Tab, Plastic)	1	
57238Y	Washer, BW55 Front Planet (Rear) (3.380”OD) (4 Tab, Steel)	1	
57239A	Washer, A40/A40D/A41/A42D/A42DL Rear Planet (Front) (2.835”OD) (1.560”ID) (2 Tab, Plastic)	1	
57239J	Washer, A44D/A44DL Rear Planet (Front) (2.835”OD) (1.980”ID) (2 Tab, Plastic)	1	
57239S	Washer, A43/A43D/A43DE/A43DL Rear Planet (Front) (2.968”OD) (4 Tab, Steel)	1	
57239Y	Washer, BW55 Rear Planet (Front) (3.385”OD) (2 Tab, Plastic)	1	
57260A	Bearing, A40 Series Output Shaft To Case	1	
57261A	Race, A40 Series Output Shaft To Case	1	

© Whatever It Takes Transmission Parts. Inc.

PART #	GASKETS & RUBBER COMPONENTS	QTY.	REFERENCE #
57300A	Gasket, A40 Series Bottom Pan	1	35168-22011
57305A	Gasket, A40/A40D/A41/A42D/A42DL/A43/A43D/A43DL/A44D/A44DL Extension Housing	1	35182-22010
57305H	Gasket, A43DE/A46DE Extension Housing	1	57193
57305Y	Gasket, BW55 Oil Galley Cover (In Extension Housing)	1	57107
57311A	O-Ring, A40 Series Pump 1973-79	1	35147-22010
57311AA	O-Ring, A40 Series Pump 1979-Up	1	90301-99010
57311C	O-Ring, A40 Series Overdrive Housing To Case	1	90301-99006
57320A	Gasket, A40/AW55 Valve Body(Upper)	1	
57320C	Gasket, A40D Valve Body (Upper)	1	
57320CCK	Gasket Set, A43D (Tacoma 2001-Up) Valve Body Gaskets (Contains 4 Gaskets)	1	
57320D	Gasket, A42D Valve Body (Upper)	1	
57320E	Gasket, A42DL/A44DL/A45DL/AW70/AW71 Valve Body (Upper)	1	
57320Q	Gasket, A43DE/A46DE/A46DF Valve Body (Upper)	1	
57320S	Gasket, A43D/AW72/KM148 Valve Body (Upper)	1	
57320Y	Gasket, BW55 Valve Body (Upper)	1	
57321A	Gasket, A40/AW55 Valve Body (Lower)	1	
57321C	Gasket, A40D Valve Body (Lower)	1	
57321D	Gasket, A42D Valve Body (Lower)	1	
57321E	Gasket, A42DL/A44DL/A45DL/AW70/AW71 Valve Body (Lower)	1	
57321Q	Gasket, A43DE/A46DE/A46DF Valve Body (Lower)	1	
57321S	Gasket, A43D/AW72/KM148 Valve Body (Lower)	1	
57321Y	Gasket, BW55 Valve Body (Lower)	1	
57323C	Seal, A40D Valve Body To Case	1	57130
57326A	Gasket, A40/A41/A43/BW55 Filter	1	04450-45007P
57326C	Gasket, A40D Filter	1	57190
57326D	Gasket, A42D/A43D/AW70/AW71 Filter	1	35339-30050
57326E	Gasket, A42DL/A43DL/A44DL/A45DL/A45DF Filter	1	
57326H	Gasket, A43DE/A44DE/A46DE Filter	1	
57368Y	O-Ring, BW55 Speed-O Housing (Volvo)	1	57125

PART #	TECHNICAL MANUALS	QTY.	REFERENCE #
57400A	Technical Manual, A40 Series	1	83-TOY40TM
57401A	Technical Manuals On CD, Toyota A40 Series	1	

PART #	MISC. COMPONENTS	QTY.	REFERENCE #
T57497	Repair End, A40 Series Cable (Teckpak)	1	

PART #	HARD PARTS	QTY.	REFERENCE #
57510A	Pump Body, A40/BW55 (.597” Gears) (Can Use 57510C Or E)	1	
57510C	Bpump Body, A41/A40D/A42D/A43D/A44D (.597” Gears) (Can Use 57510A Or E)	1	
57510E	Pump Body, A42DL/A43DL/A43DE/A44DL (.675” Gears)	1	
57520A	Stator, A40 (4 1/8” Shaft) 2.010”OD Ring Tower	1	
57520B	Stator, A41 (2 15/16” Shaft) 2.022”OD Ring Tower	1	3537012021
57520C	Stator, A40D/A42D (3 5/8” Shaft) 2.010”OD Ring Tower 1978-82	1	
57520CA	Stator, A40D/A42D (3 5/8” Shaft) 2.022”OD Ring Tower 1983-Up	1	
57520E	Stator, A42DL/A43DL/A43DE/A44DL (2 15/16” Shaft) 2.022”OD Ring Tower	1	
57520L	Stator, A43 (4 1/8” Shaft) 2.022”OD Ring Tower	1	
57520S	Stator, A43D/A44D (3 5/8” Shaft) 2.010”OD Ring Tower 1980-82	1	
57520SA	Stator, A43D/A44D (3 5/8” Shaft) 2.022”OD Ring Tower 1983-Up	1	
57520Y	Stator, BW55 (4 1/8” Shaft) (Aluminum)	1	
57551C	Drum, A40D/A42D Overdrive With 27 Teeth Sun Gear (2.032”ID Ring Bore) 1980-82	1	
57551CA	Drum, A40D/A42D Overdrive With 27 Teeth Sun Gear (2.050”ID Ring Bore) 1983-Up	1	
57551R	Drum, A44DL Overdrive With 27 Teeth Sun Gear (2.052”ID Ring Bore)	1	
57551S	Drum, A43D/A44D Overdrive With 33 Teeth Sun Gear (2.032”ID Ring Bore) 1980-82	1	
57551SA	Drum, A42DL/A43D/A43DL/A43DE/A44D/A44DL Overdrive With 33 Teeth Sun Gear (2.050”ID Ring Bore) 1983-Up	1	
57554A	Drum, A40 Forward With 6 1/2” Shaft	1	
57554B	Drum, A41 Forward With 5 3/4” Shaft	1	35701-12020
57554C	Drum, A40D/A43D Forward With Shaft (2.032”ID Ring Bore) 1978-83	1	
57554CA	Drum, A40D/A42DL/A43D/A43DL/A43DE/A44DL Forward With Shaft (2.050”ID Ring Bore) 1983-Up	1	
57554D	Drum, A42D Forward With Shaft (2.032”ID Ring Bore) 1980-82	1	
57554DA	Drum, A42D Forward With Shaft (2.050”ID Ring Bore) 1983-Up	1	
57554J	Drum, A44D Forward With Shaft (2.032”ID Ring Bore) 1980-82	1	
57554JA	Drum, A44D Forward With Shaft (2.050”ID Ring Bore) 1983-Up	1	
57554L	Drum, A43 Forward With 6 1/2” Shaft (2.050”ID Ring Bore)	1	

© Whatever It Takes Transmission Parts. Inc.

PART #	HARD PARTS (Continued)	QTY.	REFERENCE #
57554Y	Drum, BW55 Forward (Volvo) With 6 1/2” Shaft	1	
57555A	Drum, A40/A40D/BW55 Direct (2.032”ID Ring Bore)	1	
57555B	Drum, A41/A42D/A42DL/A43/A43D/A43DL/A44DL Direct (2.050”ID Ring Bore)	1	
57555CA	Drum, A40D/A43DE/A44D Direct (2.050”ID Ring Bore) 1983-Up	1	
57555D	Drum, A42D/A43D Direct (2.032”ID Ring Bore) 1980-82	1	
57560C	Piston Kit, A40D/A42D Overdrive Clutch	1	
57560E	Piston Kit, A42DL/A44D Overdrive Clutch	1	
57560S	Piston Kit, A43D/A43DE/A43DL/A44DL Overdrive Clutch	1	
57561C	Piston Kit, A40D/A42D/A43D/A44D Overdrive Direct Clutch 1978-82	1	
57561CA	Piston Kit, A40D/A42D/A42DL/A43D/A43DE/A43DL/A44D/A4DL Overdrive Direct Clutch 1983-UP	1	
57562A	Piston Kit, A40/A41/A42D/A42DL/A43/A44D Intermediate Clutch (#2 Brake)	1	
57562B	Piston Kit, A43D/A43DE/A44DL/A44D/BW55 Intermediate Clutch (#2 Brake)	1	
57564A	Piston Kit, A40 Forward Clutch	1	
57564B	Piston Kit, A41 Forward Clutch	1	
57564C	Piston Kit, A40D Forward Clutch (.125” Wide O-Ring Groove)	1	
57564CA	Piston Kit, A40D Forward Clutch (.140” Wide O-Ring Groove)	1	
57564D	Piston Kit, A42D Forward Clutch (.125” Wide O-Ring Groove)	1	
57564DA	Piston Kit, A42D Forward Clutch (.140” Wide O-Ring Groove)	1	
57564E	Piston Kit, A42DL/A43/A44DL Forward Clutch	1	
57564J	Piston Kit, A44D Forward Clutch (.125” Wide O-Ring Groove)	1	
57564JA	Piston Kit, A44D Forward Clutch (.140” Wide O-Ring Groove)	1	
57564S	Piston Kit, A43D/A43DE/A43DL Forward Clutch (.125” Wide O-Ring Groove)	1	
57564SA	Piston Kit, A43D/A43DE/A43DL Forward Clutch (.140” Wide O-Ring Groove)	1	
57565A	Piston Kit, A40 Series Direct Clutch	1	
57567A	Piston Kit, A40 Series Low/Reverse Clutch (#3 Brake)	1	
57569A	Piston Kit, A40/A41/A42D/A42DL/A43/A43D/A43DL/A43DE/A44D/A44DL Coast Clutch (#1 Brake)	1	
57569C	Piston Kit, A40D Coast Clutch (#1 Brake)	1	
57569Y	Piston Kit, BW55 Coast Clutch (#1 Brake)	1	
57571C	Clutch Hub, A40D/A42D/A42DL Overdrive	1	
57571S	Clutch Hub, A43D/A43DL/A43DE/A44D/A44DL Overdrive	1	
57574A	Clutch Hub, A40 Forward (8 Teeth, Steel)	1	
57574B	Clutch Hub, A41/A40D/A42DL/A43/A43D/A43DL/A43DE/A44D/A44DL Forward (24 Teeth, Cast Iron)	1	
57574D	Clutch Hub, A42D Forward (24 Teeth, Steel)	1	
57574Y	Clutch Hub, BW55 Forward (24 Teeth, Stamped Steel)	1	
57575A	Clutch Hub, A40/A42D Direct	1	
57575B	Clutch Hub, A41/A42DL/A43D/A43DL/A43DE/A44D/A4DL/BW55 Direct	1	
57580C	Planet, A40D/A42D Overdrive (27 Teeth Sun Gear) 1978-82	1	
57580CA	Planet, A40D/A42D Overdrive (27 Teeth Sun Gear) With 26 Spline Non Lock-Up Shaft 1983-Up	1	
57580E	Planet, A42DL/A43DL/A43DE/A44DL Overdrive (33 Teeth Sun Gear) With 26 Spline Lock-Up Shaft	1	
57580R	Planet, A44DL Overdrive (27 Teeth Sun Gear) With 26 Spline Lock-Up Shaft	1	
57580S	Planet, A43D/A44D Overdrive (33 Teeth Sun Gear) With 26 Spline Non Lock-Up Shaft	1	
57580T	Planet, A44DE Overdrive (33 Teeth Sun Gear) With 20 Spline Lock-Up Shaft	1	
57580TA	Planet, A44DE Overdrive (27 Teeth Sun Gear) With 20 Spline Lock-Up Shaft	1	
57582A	Planet, A40/A40D/A42D/A42DL Front (17 Teeth On Each Gear)	1	
57582B	Planet, A41/A44D/A44DL Front (23 Teeth On Each Gear)	1	
57582S	Planet, A43/A43D/A43DL/A43DE Front (20 Teeth On Each Gear)	1	
57582Y	Planet, BW55 (Volvo) Front (20 Teeth On Each Gear)	1	
57584A	Planet, A40/A41/A40D/A42D/A42DL Rear (17 Teeth On Each Gear)	1	
57584J	Planet, A44D/A44DL Rear (19 Teeth On Each Gear)	1	
57584S	Planet, A43/A43D/A43DL/A43DE Rear (20 Teeth On Each Gear)	1	
57584Y	Planet, BW55 (Volvo) Rear (20 Teeth On Each Gear)	1	
57590C	Ring Gear, A40D Overdrive (27 Teeth Sun Gear) (Cast Iron At Splines)	1	
57590D	Ring Gear, A42D Overdrive (27 Teeth Sun Gear) (Stamped Steel At Splines)	1	
57590E	Ring Gear, A42DL/A43D/A43DL/A43DE/A44D/A44DL Overdrive (33 Teeth Sun Gear)	1	
57592A	Ring Gear, A40/A40D/A42D/A42DL Front (2 15/16”ID)	1	
57592B	Ring Gear, A41/A43/A43D/A43DL/A43DE/A44D/A44DL Front (3 1/2”ID)	1	
57592Y	Ring Gear, BW55 Front (3 1/2”ID)	1	
57594A	Ring Gear, A40/A41/A42D Rear (2 15/16”ID Stamped Steel)	1	
57594C	Ring Gear, A40D/A42DL Rear (2 15/16”ID Cast Iron Splines)	1	
57594S	Ring Gear, A43/A43D/A43DL/A43DE/A44D/A44DL Rear (3 1/2”ID)	1	
57594Y	Ring Gear, BW55 Rear (3 1/2”ID)	1	
57612A	Sun Gear, A40/A41/A42D/A42DL (7 1/2” Long) (27 Teeth)	1	
57612C	Sun Gear, A40D (6 3/8” Long) (27 Teeth)	1	

© Whatever It Takes Transmission Parts. Inc.

57612J ..... Sun Gear, A44D/A44DL (7 1/2" Long) (27/36 Teeth) (2 Piece) 1
57612S ..... Sun Gear, A43/A43D/A43DL/A43DE/BW55 (7 1/2" Long) (33 Teeth) 1
57632A ..... Center Support, A40/A42D (2.018"OD Of Ring Tower) 1
57632B ..... Center Support, A41 (2.033"OD Of Ring Tower) 1
57632C ..... Center Support, A40D (2.018"OD Of Ring Tower) 1978-82 1
57632CA ..... Center Support, A40D (2.033"OD Of Ring Tower) 1983-Up 1
57632D ..... Center Support, A42D (2.018"OD Of Ring Tower) 1980-82 1
57632E ..... Center Support, A42DL/A43/A43D/A43DL/A44DL (2.033"OD Of Ring Tower) 1983-Up (With Ring Tower Facing Up & Lube Holes Facing You, 2nd Hole From Left Apply Between 2nd & 3rd Ring) 1
57632EA ..... Center Support, A42DL/A43D/A43DL/A44DL (2.033"OD Of Ring Tower) 1983-Up (With Ring Tower Facing Up & Lube Holes Facing You, 2nd Hole From Left Apply Between 1st (Top) & 2nd (Middle) Ring) 1
57632H ..... Center Support, A43DE/A44D/A46DE (2.033"OD Of Ring Tower) 1983-Up (With Ring Tower Facing Up & Lube Holes Facing You, 2nd Hole From The Left Apply Between 2nd (Middle) & 3rd (Bottom) Ring) 1
57632HA ..... Center Support, A43DE/A46DE (2.033"OD Of Ring Tower) 1983-Up (With Ring Tower Facing Up & Lube Holes Facing You, 2nd Hole From The Left Between 1st (Top) & 2nd (Middle) Ring) 1
57632J ..... Center Support, A44D (2.018"OD Of Ring Tower) 1980-82 1
57632S ..... Center Support, A43D (2.018"OD Of Ring Tower) 1980-82 1
57632Y ..... Center Support, BW55 1

PART #	SPRAGS & ONE WAY CLUTCHES	QTY.	REFERENCE #

57642A ..... Sprag Assembly, A40/A41 (12 Lug) 1
57642D ..... Sprag Assembly, A42D/A42DL/A43/A43D/A43DL/A43DE/A44D/A44DL/BW55 (18 Lug) 1
57650C ..... Sprag, A40D/A42D Overdrive (27 Teeth Sun Gear) 1
57650D ..... Sprag, A42D/A42DL/A43D/A43DE/A43DL/A44D/A44DL Overdrive (1.748"OD Inner Race) (33 Teeth Sun Gear) 1
57650R ..... Sprag, A44DL Overdrive (2.016"OD Inner Race) (27 Teeth Sun Gear) 1
57654A ..... Sprag, A40 Rear (20 Elements) 1
57654B ..... Sprag, A41/A40D/A42D/A42DL/A43/A43D/A43DE/A43DL/BW55 Rear (26 Elements) 1
57654J ..... Sprag, A44D/A44DL Rear (26 Elements) 1
57661C ..... Outer Race, A40D/A42D Overdrive Sprag (27 Teeth Sun Gear) 1
57661D ..... Outer Race, A42D/A42DL/A43D/A43DE/A43DL/A44D/A44DL Overdrive Sprag (33 Teeth Sun Gear) 1
57661R ..... Outer Race, A44DL Overdrive Sprag (27 Teeth Sun Gear) 1
57664A ..... Inner Race, A40/A41/A40D/A42D/A42DL/A44D/A44DL Rear Sprag (1 1/2"ID) 1
57664S ..... Inner Race, A43/A43D/A43DL/A43DE/BW55 Rear Sprag (1 3/4"ID) 1

PART #	HARD PARTS (Continued)	QTY.	REFERENCE #

57674A ..... Shaft, A41/A42/A43/BW55 (9 7/16" Long) 1
57674C ..... Shaft, A40D Intermediate (8 11/16" Long) 1
57674D ..... Shaft, A42D/A42DL/A43D/A43DL/A43DE/A44D/A44DL Intermediate (9 7/8" Long) 1
57678A ..... Output Shaft, A40 (13 1/16" Long) 21 Splines (Slip On Yoke Type) Speed-O Gear Is Held On By Flat Key In The Key-Way 1
57678B ..... Output Shaft, A41/A40D/A43D/A43DL/A44DL (13 1/16" Long) 21 Splines (Slip On Yoke Type) Speed-O Gear Is Held On By Ball Under The Gear 1
57678D ..... Output Shaft, A42D (14 3/16" Long) 18 Splines (Slip On Yoke Type) 1
57678E ..... Output Shaft, A42DL/A43D (9 9/16" Long) 25 Splines (Bolt On Yoke) 1
57678H ..... Output Shaft, A43DE (13 1/16" Long) 21 Splines (Slip On Yoke Type) Has Only 1 Sealing Ring On Shaft 1
57678J ..... Output Shaft, A44D 4x4 (7 7/8" Long) 23 Splines 1
57678JA ..... Output Shaft, A44D (D-50) (16 3/8" Long) 26 Splines (Slip On Yoke Type) 1
57678L ..... Output Shaft, A43 (14 1/4" Long) 27 Splines (Slip On Yoke Type) 1
57678Y ..... Output Shaft, BW55 (9 5/8" Long) 25 Splines (Bolt On Yoke Type) 1
57680A ..... Governor, A40/A41/A40D/A42D/A42DL/A43/A43D/A43DL/A44D 1
57680H ..... Sensor, A43DE 1
57680Y ..... Governor, BW55 1

© Whatever It Takes Transmission Parts. Inc.

PART #	HARD PARTS (Continued)	QTY.	REFERENCE #
57740A	Valve Body, A40 (Cast # 023 024 025)	1	
57740AA	Valve Body, A40 (Cast # 024 025 028)	1	
57740AB	Valve Body, A40 (Cast # 902 903 904)	1	
57740AC	Valve Body, A40 (Cast # 027H 03-55)	1	
57740B	Valve Body, A41	1	
57740C	Valve Body, A40D	1	
57740D	Valve Body, A42D	1	
57740E	Valve Body, A42DL	1	
57740G	Valve Body, A43DL	1	
57740H	Valve Body, A43DE	1	
57740J	Valve Body, A44D	1	
57740L	Valve Body, A43	1	
57740R	Valve Body, A44DL	1	
57740RB	Valve Body, A44DE (3 Solenoids)	1	
57740S	Valve Body, A43D	1	
57740Y	Valve Body, BW55	1	
57750A	Bell Housing, A40 (Top Bolts 4 1/2")	1	
57750B	Bell Housing, A41 (Top Bolts 4 1/2") (Cast # 8919) (Starter At 10:00)	1	
57750C	Bell Housing, A40D (Top Bolts 4 3/4") (Cast # 8963)	1	
57750D	Bell Housing, A42D (Top Bolts 4 1/8")	1	
57750J	Bell Housing, A44D (Top Bolts 5 1/8")	1	
57750JA	Bell Housing, A44D (Top Bolts 5 1/2")	1	
57750L	Bell Housing, A43 (Top Bolts 2 1/2")	1	
57750R	Bell Housing, A44DL (Top Bolts 4 1/2") (Cast # 8972)	1	
57750RB	Bell Housing, A44DL (Top Bolts 5 1/8") (Cast # 8991)	1	
57750S	Bell Housing, A43D/A43DL/A43DE (Top Bolts 5 1/8")	1	
57750SA	Bell Housing, A43D (Volvo) (Top Bolts 8")	1	
57750SB	Bell Housing, A43D/A43DL/A43DE (Top Bolts 6 1/4") (Cast 8987)	1	
57750SC	Bell Housing, A43D (Volvo) (Top Bolts 4 3/8") (Cast # 8967)	1	
57750Y	Bell Housing, BW55 (Volvo) (Top Bolts 8 1/8")	1	
57760A	Case, A40 (Tag ID# 03-55)	1	
57760B	Case, A41 (Tag ID # 03-56)	1	
57760C	Case, A40D (Tag ID # 03-50)	1	
57760D	Case, A42D/A42DL/A44D/A44DL (Toyota) Blue Tag (Tag ID # 03-70, 03-70L, 03-72, 03-72L)	1	
57760DA	Case, A42D/A42DL (Volvo) Black (Tag ID # 03-70, 03-70L)	1	
57760H	Case, A43DE (Without 4 Bolt Mount On Top Of Case) (Tag ID # 03-71LE)	1	
57760HA	Case, A43DE (With 4 Bolt Mount On Top Of case) (Tag ID # 03-71LE)	1	
57760JA	Case, A44D (Dodge D-50) (Tag ID # 03-72)	1	
57760L	Case, A43 (Tag ID # 03-75)	1	
57760RC	Case, A44DE (Pink Tag ID # 03-72LE)	1	
57760RD	Case, A44DE (Blue Tag ID # 03-72LE)	1	
57760S	Case, A43D/A43DL (Toyota) (Blue Tag ID # 03-71, 03-71L)	1	
57760SA	Case, A43D (Volvo) (Black Tag ID # 03-71)	1	
57760Y	Case, BW55 (Volvo) (Tag ID # Model 55)	1	
57762C	Case, A40D Overdrive (2.010"ID Of Ring Tower) 1978-82	1	
57762CA	Case, A40D Overdrive (2.022"OD Of Ring Tower) 1983-Up	1	
57762D	Case, A42D Overdrive (2.010"OD Of Ring Tower) 1980-82	1	
57762DA	Case, A42D Overdrive (2.022"OD Of Ring Tower) 1983-Up	1	
57762S	Case, A43D/A44D Overdrive (2.010"OD Of Ring Tower) 1980-82	1	
57762SA	Case, A42DL/A43D/A43DL/A43De/A44D/A44DL Overdrive (2.022"OD Of Ring Tower) 1983-Up	1	
57765A	Pan, A40 (1 15/16" At Deep End) (14" Tall Tube Above Pan On Passenger Side)	1	
57765B	Pan, A41 (1 15/16" At Deep End) (5 1/4" Tall Tube Above Pan On Drivers Side)	1	
57765C	Pan, A40D/A42D/A43D/A43DL/A43DE/A44DL (2 5/16" At Deep End) (Tube Is 6" Tall Above Pan On Passengers Side)	1	
57765E	Pan, A42DL/A43D (3 1/16" At Deep End) (6" Tall Tube Above Pan On Drivers Side)	1	
57765J	Pan, A44D (3 1/16" At Deep End) (6" Tall Tube Above Pan On Passengers Side)	1	
57765L	Pan, A43 (1 15/16" At Deep End) (8 1/2" Tall Tube Above Pan On Drivers Side)	1	
57765Y	Pan, BW55 (Volvo) (2 5/16" At Deep End) (Screw In Tube)	1	

© Whatever It Takes Transmission Parts. Inc.

57770A ..... Extension Housing, Some A40/A41/A40D/A42D/A43D/A43DL/A43DE (8 3/4" Long) 2 1/4"OD Rear Seal (Passenger Side Speed-O) 4 Threaded Mount Bolts Angle Up From Bottom At 45 Degrees 1

57770AA ..... Extension Housing, Some A40/A41/A40D/A42D/A43D/A43DL/A43DE (8 3/4" Long) 2 1/4"OD Rear Seal (Drivers Side Speed-O) 4 Threaded Mount Bolts Angle Up From Bottom At 45 Degrees 1

57770AB ..... Extension Housing, Some A40/A41/A40D/A42D/A43D/A43DL/A43DE (8 3/4" Long) 2 1/4"OD Rear Seal (Drivers Side Speed-O) 6 Bolt Threaded Mount Bolts On Top 1

57770E ..... Extension Housing, Some A42DL/A43D (5 1/8" Long) 1 15/16"OD Rear Seal (With Plugged Speed-O Hole) 4 Unthreaded Mounting Holes Facing The Rear 1

57770EA ..... Extension Housing, Some A42DL/A43D (5 1/8" Long) 1 15/16"OD Rear Seal (With Plugged Speed-O Hole) 4 Threaded Mounting Holes Facing The Rear 1

57770G ..... Extension Housing, A44DL 4x4 (2 3/8" Long) 1.360"ID Rear Seal (Sensor On Drivers Side) 2 Threaded Mount Holes On Bottom 1

57770J ..... Extension Housing, A44D 4x4 (3 1/2" Long) 2 Bolt Mount Facing Rear 1

57770JA ..... Extension Housing, A44D (Dodge D-50) 12" Long (2 Studs For Mount Facing Rear) 1

57770L ..... Extension Housing, A43 (10" Long) 1 15/16"OD Rear Seal (Passenger Side Speed-O) 2 Bolt Bottom Mount 1

57770Q ..... Extension Housing, A46DE (8 3/4" Long) 2 1/4"OD Rear Seal & Speed Sensor) 6 Threaded Mount Bolts On Bottom 1

57770R ..... Extension Housing, A44D (8 3/4" Long) 2 1/4"OD Rear Seal) Drivers Side Speed-O (4 Threaded Mounting Holes On Bottom Facing Down) 1

57770RC ..... Extension Housing, A44DE (8 3/4" Long) 2 1/4"OD Rear Seal (Passenger Side Speed-O & Sensor) 4 Threaded Mounting Holes On Bottom Facing Down & 4 Threaded Holes On Top Facing Down (Cast # 8921) 1

57770RG ..... Extension Housing, A44DE 4x4 (2 3/4" Long) 2 5/8"OD Rear Seal (Passengers Side Sensor) 12 Round Holes To Transfer Case (Cast # 36117-8907) 1

57770S ..... Extension Housing, A43D (Mitsubishi Montero) 12 1/4" Long (Drivers Side Speed-O) 2 Studs For Mount Facing The Rear 1

57770Y ..... Extension Houisng, BW55 (Volvo) 5 1/8" Long (Passenger Side Speed-O) 2 Bolt Mount 1

57774A ..... Housing, A40 Series Driven Speed-O Gear 1

57775 ..... Bolt, A40 Series Converter (8 x 1.25mm) ..... AR

67775 ..... Bolt, A40 Series Converter (9 x 1.25mm) ..... AR

57842A ..... Retainer, A40 Series Speed-O Housing 1

57847A ..... Gear, A40 Speed-O Drive (6 Teeth) 5/8" Wide (Uses Key For Shaft) 1

57847B ..... Gear, A41/A40D/A43D/A43DL/A43DE/A44DL Speed-O Drive (6 Teeth) 5/8" Wide (Uses Ball For Shaft) 1

57847D ..... Gear, A42D Speed-O Drive (5 Teeth) 9/16" Wide (Uses Plastic Slot For Shaft) 1

57847E ..... Sleeve, A42DL/A43D (1 1/16" Long) 1 1/2"OD 1

57847L ..... Gear, A43 Speed-O Drive (6 Teeth) 9/16" Wide (Uses A Ball For Shaft) 1

57847Y ..... Gear, BW55 (Volvo) Speed-O Drive (6 Teeth) 7/8" Wide (Held On By Yoke) 1

57850C ..... Cushion, A40 Series Overdrive Clutch 1

57861C ..... Snap Ring, A40 Series Holds Overdrive Pressure Plate In Overdrive Case 1

57862C ..... Snap Ring, A40 Series Holds Retainer In Overdrive Case 1

57863C ..... Snap Ring, A40 Series Under Overdrive Clutch Hub 1

57864C ..... Snap Ring, A40 Series Holds Overdrive Clutch Hub In Overdrive Direct Drum 1

57865A ..... Snap Ring, A40 Series Holds Retainer In Overdrive Drum 1

57866A ..... Snap Ring, A40 Overdrive Series Holds Sprag Assembly In Overdrive Planet 1

57869A ..... Snap Ring, A40 Series Holds Coast Clutch Pressure Plate In Center Support 1

57871A ..... Snap Ring, A40 Series Holds Coast Clutch Retainer In Center Support 1

57873A ..... Snap Ring, A40 Series Holds Intermediate Pressure Plate In Center Support 1

57874A ..... Snap Ring, A40 Series Holds Intermediate Retainer In Center Support 1

57875A ..... Snap Ring, A40 Series Under Direct Clutch Hub 1

57876A ..... Snap Ring, A40 Series Holds Direct Clutch Hub In Forward Drum 1

57877A ..... Snap Ring, A40 Series Holds Forward Retainer In 1

57878A ..... Snap Ring, A40 Series Holds Direct Pressure Plate In 1

57879A ..... Snap Ring, A40 Series Holds Direct Retainer In 1

57882A ..... Snap Ring, A40 Series Holds Front Ring Gear InOutput Shaft 1

57884A ..... Snap Ring, A40 Series Holds Sun Gear In Center Support 1

57887A ..... Snap Ring, A40 Series Holds Low/Reverse Sprag In Front Planet 1

57889A ..... Snap Ring, A40 Series Holds Intermediate Shaft To Rear Ring Gear 1

57892A ..... Snap Ring, A40 Series Holds Low/Reverse Clutch In Case 1

57894A ..... Snap Ring, A40 Series Stop For Governor 1

57895A ..... Snap Ring, A40 Series Holds Drive Speed-O Gear To Output Shaft 1

© Whatever It Takes Transmission Parts. Inc.

PART #	HARD PARTS (Continued)	QTY.	REFERENCE #
57925A	Accumulator Assembly, A40/A41	1	
57925C	Accumulator Assembly, A40D/A42D	1	
57925E	Accumulator Assembly, A42DL	1	
57925H	Accumulator Assembly, A43DE	1	
57925J	Accumulator Assembly, A44D	1	
57925L	Accumulator Assembly, A43DE	1	
57925R	Accumulator Assembly, A44DL	1	
57925S	Accumulator Assembly, A43D/A43DL	1	
57948A	Gear, A40 Series Driven Speed-O	1	
57958A	Tube, A40/A41/A42D/A42DL Brake Apply (Tin) (3 1/8” Tall)	1	
57958C	Tube, A40D/A43/A43D/A43DE/A43DL/A44D/A44DL Brake Apply (Tin) (3” Tall)	1	
57958Y	Tube, BW55 (Volvo) Brake Apply (Tin) (3” Tall) With 15 Lugs	1	
57960C	Piston, A40D/A42D/A43D/A44D Overdrive 1978-82	1	
57960CA	Piston, A40D/A42D/A42DL/A43D/A43DL/A43DE/A44D/A44DL Overdrive 1983-Up	1	
57961C	Piston, A40D/A42D/A43D/A43DL/A43DE/A44D/A44DL Overdrive Direct (Cast # 03-50)	1	
57961CA	Piston, A40D/A42D/A42DL/A43D/A43DL/A43DE/A44D Overdrive Direct (No Cast #)	1	
57962A	Piston, A40 Intermediate Clutch (Use 57969A)	1	
57962B	Piston, A41/A42D/A42DL/A43/A43D/A43DE/A43DL/A44D/A44DL Intermediate Clutch	1	
57962Y	Piston, BW55 (Volvo) Intermediate Clutch (Use 57969Y)	1	
57964A	Piston, A40 Forward Clutch	1	
57964B	Piston, A41 Forward Clutch	1	
57964C	Piston, A40D Forward Clutch (.125” Wide O-Ring Groove)	1	
57964CA	Piston, A40D Forward Clutch (.140” Wide O-Ring Groove)	1	
57964D	Piston, A42D Forward Clutch (.125” Wide O-Ring Groove)	1	
57964DA	Piston, A42D Forward Clutch (.140” Wide O-Ring Groove)	1	
57964E	Piston, A42DL/A43/A44DL Forward Clutch	1	
57964J	Piston, A44D Forward Clutch (.125” Wide O-Ring Groove)	1	
57964JA	Piston, A44D Forward Clutch (.140” Wide O-Ring Groove)	1	
57964S	Piston, A43D/A43DE/A43DL Forward Clutch (.125” Wide O-Ring Groove)	1	
57964SA	Piston, A43D/A43DE/A43DL Forward Clutch (.140” Wide O-Ring Groove)	1	
57965A	Piston, A40 Series Direct Clutch	1	
57967A	Piston, A40 Series Low/Reverse Clutch	1	
57969A	Piston, A40/A41/A42D/A42DL/A43/A43D/A43DE/A43DL/A44D/A44DL Coast Clutch (Also Fits A40 Series Intermediate Clutch)	1-2	
57969C	Piston, A40D Coast Clutch	1	
57969Y	Piston, BW55 (Volvo) Coast Clutch (Also Fits BW55 (Volvo) Intermediate Clutch)	1-2	
57970C	Spring, (A40 Overdrive Series) Overdrive Direct Return	18	
57971C	Spring, (A40 Overdrive Series) Overdrive Return	12	
57972A	Spring, A40 Series Intermediate Clutch Return	12	
57974A	Spring, A40 Series Forward Clutch Return	16	
57975A	Spring, A40 Series Direct Clutch Return	18	
57977A	Spring, A40 Series Low/Reverse Clutch Return	16	
57979A	Spring, A40 Series Coast Clutch Return	12	
57980C	Retainer, (A40 Overdrive Series) Overdrive Clutch Spring	1	
57981C	Retainer, (A40 Overdrive Series) Overdrive Direct Clutch Spring	1	
57982A	Retainer, A40 Series Intermediate Clutch Return Spring	1	
57984A	Retainer, A40 Series Forward Clutch Return Spring	1	
57985A	Retainer, A40 Series Direct Clutch Return Spring	1	
57987A	Retainer, A40 Series Low/Reverse Clutch Return Spring	1	
57989A	Retainer, A40 Series Coast Clutch Return Spring	1	
57991A	Linkage Assembly, A40 Series Internal	1	
57994A	Park Rod Actuator Assembly, A40/A41/A40D/A43D/A43DL (10 5/8” Long)	1	
57994D	Park Rod Actuator Assembly, A42D/A43DE/A44DL (10 5/8” Long)	1	
57994E	Park Rod Actuator Assembly, A42DL/A43 (9 7/8” Long)	1	
57994J	Park Rod Actuator Assembly, A44D (11 5/8” Long)	1	
57994L	Park Rod Actuator Assembly, A43 (11 1/4” Long)	1	
57994Y	Park Rod Actuator Assembly, BW55 (Volvo) (10 1/4” Long)	1	
57995A	Park Pawl Assembly, A40/A41/A40D/A43D/A43DE/A43DL/A44D/A44DL	1	
57995D	Park Pawl Assembly, A42D/A42DL/A43	1	
57996A	Cooler Line Fitting, A40 Series	1	
57999C	Oil Tube Set, A40D Valve Body	2	
57999D	Oil Tube Set, A42D Valve Body	1	
57999E	Oil Tube Set, A42DL Valve Body	1	
57999G	Oil Tube Set, A43DL Valve Body	1	
57999H	Oil Tube Set, A43DE Valve Body	1	
57999J	Oil Tube Set, A44D Valve Body	1	
57999R	Oil Tube Set, A44DL Valve Body	1	
57999S	Oil Tube Set, A43D Valve Body	1	

© Whatever It Takes Transmission Parts. Inc.

© Whatever It Takes Transmission Parts. Inc.

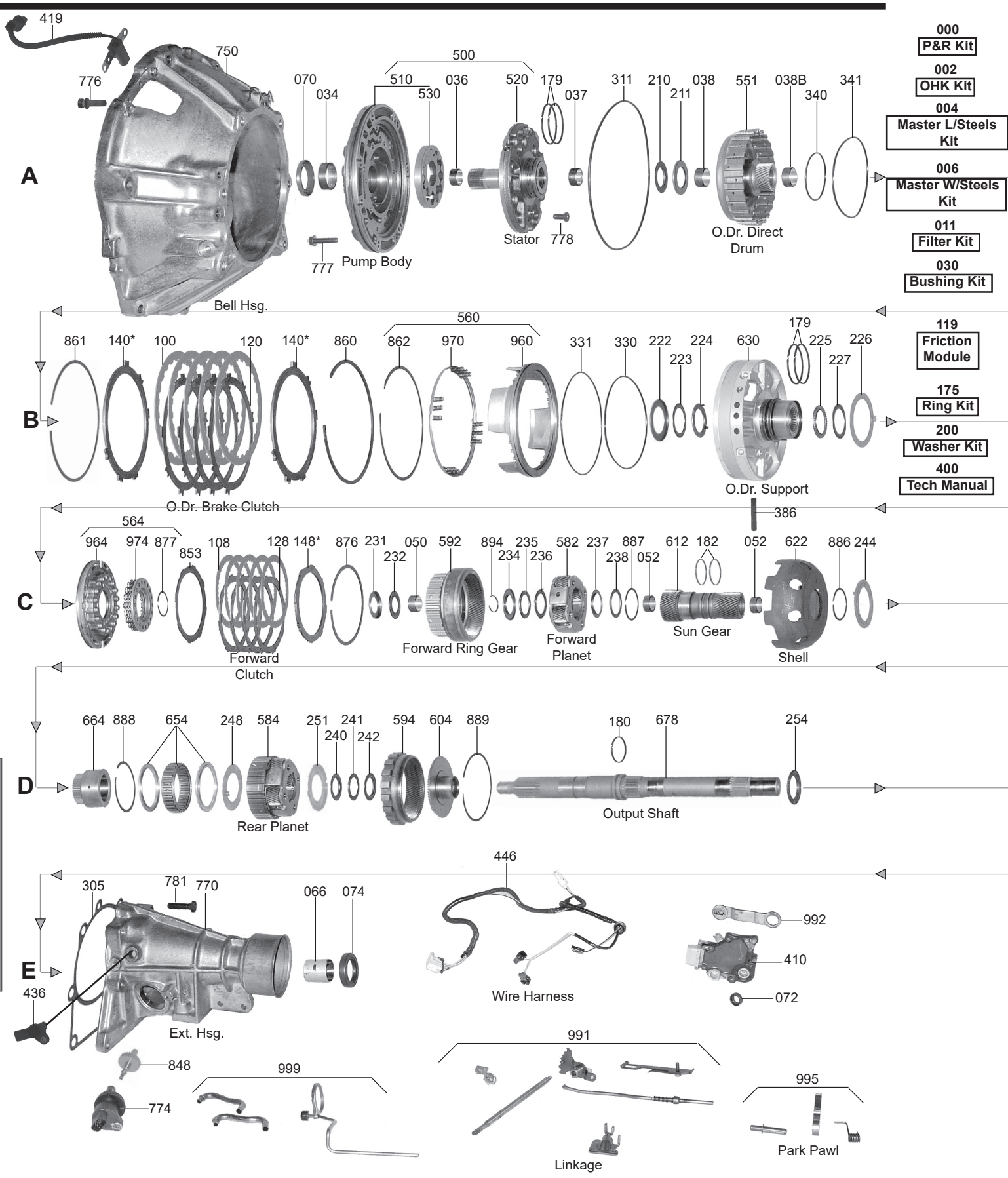

TOYOTA

© Whatever It Takes Transmission Parts. Inc.

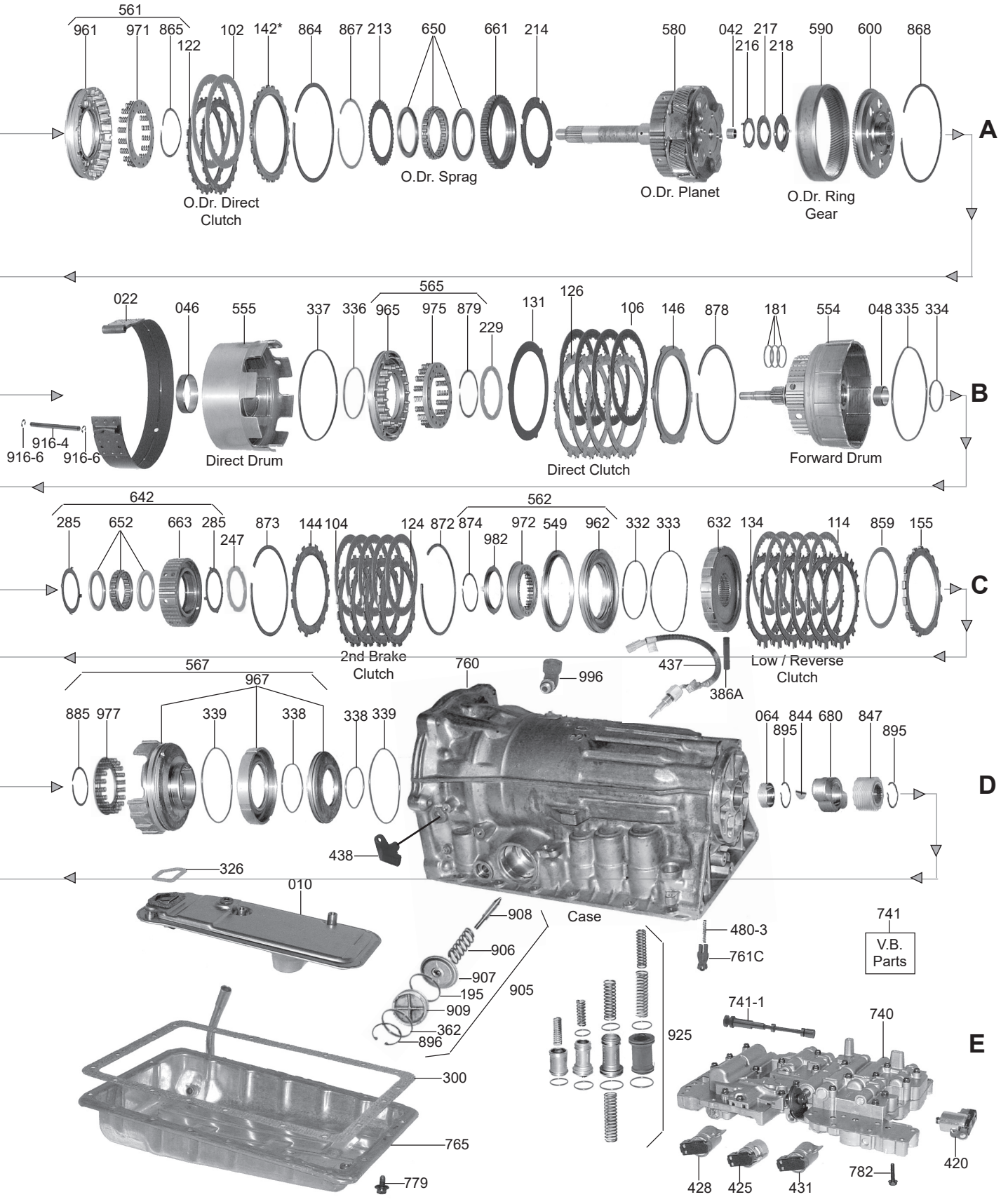

TOYOTA

© Whatever It Takes Transmission Parts. Inc.

PART #	PAPER & RUBBER KIT	QTY.	REFERENCE #
97000	Paper & Rubber Kit, A340E/A340H 1985-Up (A340E Supra 1989-8/1998, Lexus GS300 1/1993-5/1993,	1	
97000C	Paper & Rubber Kit, A340E/A341E/A350E (Lexux SC300 8/1991-7/2000; GS300 1/1993-97; SC400 4/1991-9'1997; LS400 5/1989-7/1997) (Toyota 4-Runner 8/2000-2002; Tacoma 8/2000-2002; Supra 1989-8/1998) (Volvo 940 & 960 1991-1997; S-90 1998-2000)	1	
97000E	Paper & Rubber Kit, A340/A340E/A340F/A340H (Cressida 1987-92, Supra 1986-88, Truck 1985-94, 4-Runner 1985-7/2000, T-100 1993-8/1998, Tacoma 1995-7/2000, Land Cruiser With A343F 1995-98)	1	
97000EA	Paper & Rubber Kit, A340E/A340F (Land Cruiser 1999-02, Tundra 2/1999-2002, Sequoia 9/2000-2002)	1	

PART #	OVERHAUL KITS	QTY.	REFERENCE #
97002	Overhaul Kit, A340E/A340F/A340H/A341E/A343F (Toyota/Jeep/Lexus/Volvo) 2000-15 (For Jeep 4x4 Sell 97074B Also)	1	
97002B	Overhaul Kit, A340E/A340F/A340H/A341E/A343F (Toyota/Jeep/Lexus/Volvo) 2000-Up (Also Fits Isuzu 2003-04)(For Jeep 4x4 Sell 97074B Also)	1	
97002E	Overhaul Kit, A340/A340E/A340F/A340H (Cressida 1987-92, Supra 1986-88, Truck 1985-94, 4-Runner 1985-7/2000, T-100 1993-8/1998, Tacoma 1995-7/2000, Land Cruiser With A343F 1995-98)	1	
97002EA	Overhaul Kit, A340E/A340F (Land Cruiser 1999-02, Tundra 2/1999-04, Sequoia 9/2000-02)	1	

PART #	MASTER L/STEEL KIT	QTY.	REFERENCE #
97004	Master L/Steels Kit, A340E/A340F/A340H/A341E/A343F (Toyota/Lexus/Volvo) 1985-99	1	
97004A	Master L/Steels Kit, A340E/A340H (AW4 Jeep) 1987-99	1	
97004AA	Master L/Steels Kit, A340E/A340H (AW4 Jeep) 2000-Up	1	
97004C	Master L/Steels Kit, A340E/A341E (Lexus GS300 1/1993-5/1993, SC400 4/1991-9/1997, LS400 5/1989-9/1997) (All Volvo With 2.9L 91-05)	1	
97004D	Master L/Steels Kit, A350E 1996-Up	1	
97004E	Master L/Steels Kit, A340E/A340F/A340H/A341E/A343F (Toyota/Lexus/Volvo) 2000-Up	1	
97004EA	Master L/Steels Kit, A340E/A340F (Land Cruiser 1999-02, Tundra 2/1999-2004, Sequoia 9/2000-2003, Lexus 1999-02)	1	
97004EB	Master L/Steels KIt, A340E/A340F (4 Runner 8/2000-02)(Tacoma 8/2000-03)(Rodeo 2003-04)	1	
97004R	Master L/Steels Kit, A340E/A340H (Montero R/V4AW3) 1994-00	1	

PART #	MASTER W/STEEL KIT	QTY.	REFERENCE #
97006	Master W/Steels Kit, A340E/A340H (Toyota T100 Truck) 1985-Up	1	
97006A	Master W/Steels Kit, A340E/A340H (AW4 Jeep) 1987-Up	1	
97006AA	Master W/Steels Kit, A340E/A340H (AW4 Jeep) 2000-Up	1	
97006C	Master W/Steels Kit, A340E/A341E (Lexus SC400 4/1991-9/1997, GS300 1/1993-5/1993, LS400 5/1989-7/1997) (All Volvo With 2.9L 1991-05)	1	
97006D	Master W/Steels Kit, A340E/A340H (Toyota) 1992-Up	1	
97006E	Master W/Steels Kit, A340E/A340F (4 Runner 1996-7/2000, Tacoma 1995-7/2000)	1	
97006EA	Master W/Steels Kit, A340E/A340F (Land Cruiser 1999-02, Tundra 2/1999-2004, Sequoia 9/2000-2003, Lexus 1999-02, Sorrento 2003-04)	1	
97006EB	Master W/Steels Kit, A340E/A340F (4 Runner 8/2000-02)(Tacoma 8/2000-03)(Rodeo 2003-04)	1	
97006R	Master W/Steels Kit, A340E/A340H (Montero R/V4AW3) 1994-00	1	

PART #	FILTER	QTY.	REFERENCE #
97010	Filter, A340E 2WD (3 Bolt) Rectangle Pick-Up Hole	1	35330-30011
97010A	Filter, A340F/A340H 4x4 (11 Bolts) 1985-Up	1	35303-35010
97010B	Filter, A340E (Jeep) 4x4 (4 Bolt Rectangle Pick-Up)	1	83504032
97010C	Filter, A341E 2WD (3 Bolt) Oval Pick-Up Hole 1990-Up (Lexus LS400) (Toyota Supra W/Turbo) (Volvo 960/S-90/V-90 1993-00)	1	
97010CA	Filter, A341E (3 Bolt)(Lexus GS300)(Toyota 4 Runner) 1993-03	1	
97010D	Filter, A340F 4x4 (4 Bolt) Oval Pick-Up On Corner (Oval Pick-Up Is 3/8" Tall) 1995-Up	1	25330-22010
97010DA	Filter, A340F 4x4 (4 Bolt) Oval Pick-Up Is 3" From Corner (4 Runner 1996-97) (Has 2 Cork Gaskets And Filter To Valve Body)	1	
97010DB	Filter, A343F (4 Bolt) Oval Pick-Up On Corner (Oval Pick-Up Is 3/4" Tall) 1995-Up (Landcruiser & Tacoma)	1	
97010DD	Filter, A340F / A343F (4 Bolt) Oval Pick-Up Is 3" From Corner (Has 3 Cork Gaskets, Filter To Valve Boy) Oval Pick-p Is 7/8" Tal (Toyota 4x4,Landcruiser Tundra & Lexs With V-8) 1998-Up	1	
97010E	Filter, A50E (Lexus 5 Speed)(3 Bolt) 1996-97	1	35330-60020

© Whatever It Takes Transmission Parts. Inc.



97015A ..... Filter, A340 Solenoid (Goes In The Valve Body) 2000-Up ..... 1 .....
97015B ..... Filter, A340 Accumulator (Goes In The Valve Body) 2000-Up ..... 1 .....
97015C ..... Filter, A340 Regulator (Goes In The Valve Body) 2000-Up ..... 1 .....

PART #	FILTER KITS	QTY.	REFERENCE #
97011	Filter Kit, A340 (Toyota) 2WD 1985-Up	1	
97011A	Filter Kit, A340 (Toyota) 4x4 1985-Up	1	
97011B	Filter Kit, A340 4x4 (Jeep) 4 Bolt (Rectangle Pick-Up)	1	
97011C	Filter Kit, A341 (Lexus) 1991-92	1	
97011D	Filter Kit, A340F (T100) V6 1995-96	1	

PART #	BANDS	QTY.	REFERENCE #
97022	Band, A340/A341 1985-Up	1	35810-30020

PART #	BUSHINGS	QTY.	REFERENCE #
97030	Bushing Kit, A340 1985-Up	1	
57034A	Bushing, A340 Front Pump 1985-Up	1	
57036B	Bushing, A340 Stator (Front)(.848"ID)(.680"Wide)(Babbit)	1	
57036CB	Bushing, A340 Stator (Front)(.864"ID)(.680"Wide)	1	
97037	Bushing, A340 Stator Support (Rear)(1.060"ID)(.680"Wide)(Brass)	1	
97038	Bushing, A340/A341 Overdrive Drum (Front & Rear)	2	
97042	Bushing, A340 Overdrive Planet (Rear)	1	
97046	Bushing, A340 Direct Drum	1	
97050	Bushing, A340 Front Planet Ring Gear 1985-Up	1	
97052	Bushing, A340 Forward Sun Gear (Front & Rear) 1985-Up	2	
97064	Bushing, A340 Case 1985-Up	1	
12034	Bushing, A340 Case (#064) (Babbit)	1	
97066	Bushing, A340 Extension Housing (1.575"ID) (40mm) 1985-Up	1	
97066A	Bushing, A340 Extension Housing (1.378"ID) (35mm) 1985-Up	1	
97066AA	Use 57066A	1	
57066A	Bushing, A340 Extension Housing (1.500"ID) 1984-Up	1	
97066B	Bushing, A340 Extension Housing (44mm)	1	
57066J	Bushing, A340 Extension Housing (1.507"ID)	1	

PART #	METAL CLAD SEALS	QTY.	REFERENCE #
57070A	Seal, A340 Extension Housing 2WD (40x58x11mm) Toyota 1985-Up	1	90311-38020
60072	Seal, A340 Manual Shaft	1	
97074	Seal, A340 Extension Housing 2WD (40x58x11mm) Toyota 1985-Up	1	90311-40001
97074A	Seal, A340 Extension Housing 2WD (38x58x11mm) Jeep 1985-Up	1	
97074B	Seal, A340 Extension Housing 4x4 (Adapter) (49x62x7mm) Jeep 1985-Up	1	83504055

© Whatever It Takes Transmission Parts. Inc.

PART #	METAL CLAD SEALS (Continued)	QTY.	REFERENCE #
97074C	Seal, A340 Extension Housing 2WD (45x55x11mm) Lexus/Volvo 1990-Up	1	
97078	Seal, A340 S Type Speed-O Driven Gear	1	90310-09001

PART #	FRICTION CLUTCH	QTY.	REFERENCE #
97100	Friction, A340 Overdrive Brake Clutch (.081") 24 Teeth (6.50"OD)(High Energy) 1985-Up	3-5	34633-50010
97100HP	Friction, A340 Overdrive Brake Clutch (.081") 24 Teeth (6.50"OD) Hi-Performance 1985-Up	3-5	
97102	Friction, A340 Overdrive Direct Clutch (.083") 32 Teeth 1985-Up	2	35633-30040
97104	Friction, A340 2nd Brake Clutch (.081") 32 Teeth 1985-Up	4-5	35667-50020
97104E	Friction, A340E/A340F 2nd Brake Clutch (.080")(32 Teeth)(Hi-Energy)(Waved) 2000-Up	4-5	
97104HP	Friction, A340 2nd Brake Clutch (.081") 32 Teeth (Hi-Performance) 1985-Up	4-5	
87106AC	Friction, A340 Direct Clutch (.083") 40 Teeth (5.20"OD) 1985-Up	4-5	35667-50030
97106B	Friction, A340 Direct Clutch (.079") 40 Teeth (5.20"OD) 2000-Up	5	
97106BA	Friction, A340E/A340F Direct Clutch (.078")(40 Teeth)(5.200"OS)(Waved) 2002-Up	5	
97106HP	Friction, A340 Direct Clutch (.069") 40 Teeth (Hi-Performance) 1985-Up	5	
97108	Friction, A340 Forward Clutch (.067") 40 Teeth 1985-Up	6	35633-30040
97108A	Friction, A340 Forward Clutch (.083") 40 Teeth 1985-Up	3-5	35677-30090
97108B	Friction, A340 Forward Clutch (.078") 40 Teeth (Lexus, Volvo) 1990-Up	6-7	35677-30150
97108E	Friction, A340 Forward Clutch (.080") 40 Teeth (Hi-Energy) 1995-Up	6-7	
97108EA	Friction, A340E/A340F Forward Clutch (.067")(40 Teeth)(Hi-Energy)(Waved) 2000-Up	6-7	
97114	Friction, A340 Low/Reverse Clutch (.067") 32 Teeth 1985-Up	6-7	35677-30110
97119	Friction Module, A340 (Fits 97004) 1985-99	1	
97119AA	Friction Module, A340E/A340F/A340H/A341E/A343F 1995-Up (Fits 97004AA)	1	
97119E	Friction Module, A340F (For 6 Cylinder) (Fits 97004E)	1	
97119EA	Friction Module, A340E/A340F 1999-Up	1	
97119S1	Friction Module, A340 (Stage 1) (Fits 97004) 1985-99	1	

PART #	STEEL CLUTCH	QTY.	REFERENCE #
97120	Steel, A340 Overdrive Brake Clutch (.079") 6 Teeth 1985-Up	3-4	34634-30020
97120C	Steel, A340 Overdrive Brake Clutch (Volvo & T100) (.079") 1992-Up	3-4	34634-30021
97122	Steel, A340 Overdrive Direct Clutch (.079") 24 Teeth 1985-Up	1-2	34616-30010
97122A	Steel, A340 Overdrive Direct Clutch (.118") 24 Teeth (4.145"ID) 1990-Up	AR	34616-50010
87122AC	Steel, A340 Direct Clutch (.091")(6 Teeth)(4.160"ID) 1985-Up	AR	
97122C	Steel, A340 Overdrive Direct Clutch (.098") 24 Teeth 1992-Up	1	3549181-0
97124	Steel, A340 2nd Brake Clutch (.071") 16 Teeth 1985-Up	1	35647-30030
97124A	Steel, A340 2nd Brake Clutch (.098") 16 Teeth 1985-Up	4	35647-30020
97124B	Steel, A340 2nd Brake Clutch (.157") 1985-Up	AR	35647-050
97126	Steel, A340 Direct Clutch (.091") 1985-Up (Use 87122AC)	1-4	35647-30011
87122AC	Steel, A340 Direct Clutch (.091") 1985-Up	1-4	35647-30011
97126A	Steel, A340 Direct Clutch (.118") 6 Teeth 1985-Up	3-4	35647-14010
97126B	Steel, A340 Direct Clutch (.087") 24 Teeth	AR	35647-30040
97126C	Steel, A340 Direct Clutch (.071") 6 Teeth 1993-Up	4	35634-30020
97126D	Steel, A340 Direct Clutch (.091") 24 Teeth 2000-Up	4	
97128	Steel, A340 Forward Clutch (.079") 8 Teeth 1985-Up	5	35634-30100
97128A	Steel, A340 Forward Clutch (.071") 8 Teeth 1985-Up (When Out Use 67122A)	6-7	35634-32010
67122A	Friction, A340 Forward Clutch # 128 (.071")(8 Teeth)(4.160"OD)	6-7	
97128C	Steel, A340 Forward Clutch (.091") 8 Teeth 1992-Up	5	35634-30110
97134	Steel, A340 Low/Reverse Clutch (.071") 14 Teeth 1985-Up	5-7	35648-30031

PART #	CLUTCH PRESSURE PLATES	QTY.	REFERENCE #
97140	Pressure Plate, A340 Overdrive Clutch (.122") (Top & Bottom) 1985-Up	1-2	
97140A	Pressure Plate, A340 Overdrive Clutch (.130) (Top & Bottom) 1985-Up	1-2	34625-30090
97140B	Pressure Plate, A340 Overdrive Clutch (.138") (Top & Bottom) 1985-Up	1-2	34625-30080
97140C	Pressure Plate, A340 Overdrive Clutch (.141") (Top & Bottom) 1985-Up	1-2	34625-30070
97140D	Pressure Plate, A340 Overdrive Clutch (.146") (Top & Bottom) 1985-Up	1-2	34625-30060
97140E	Pressure Plate, A340 Overdrive Clutch (.149") (Top & Bottom) 1985-Up	1-2	34625-30050
97140G	Pressure Plate, A340 Overdrive Clutch (.153") (Top & Bottom) 1985-Up	1-2	34625-30040
97140H	Pressure Plate, A340 Overdrive Clutch (.157") (Top & Bottom) 1985-Up	1-2	34625-30100
97142A	Pressure Plate, A340 Overdrive Direct Clutch (.134") 24 Teeth (Stepped) 1985-Up	1	
97144	Pressure Plate, A340 2nd Brake Clutch (.118") 16 Teeth	1	35676-30020
97146A	Pressure Plate, A340 Direct Clutch (6 Teeth) Stepped	1	
97146B	Pressure Plate, A340 Direct Clutch (24 Teeth) Stepped	1	
97148	Pressure Plate, A340 Forward Clutch (.133") 8 Teeth	1	35635-30040
97148A	Pressure Plate, A340 Forward Clutch (.141") 8 Teeth	1	
97148AA	Pressure Plate, A340 Forward Clutch (.149") 8 Teeth	1	
97148B	Pressure Plate, A340 Forward Clutch (.157") 8 Teeth	1	

© Whatever It Takes Transmission Parts. Inc.

97148C	Pressure Plate, A340 Forward Clutch (.165") 8 Teeth	1	
97155	Pressure Plate, A340 Low/Reverse Clutch (.157") 14 or 15 Teeth	1	
97155A	Pressure Plate, A340 Low/Reverse Clutch (.165") 14 or 15 Teeth	1	35676-50060
97155B	Pressure Plate, A340 Low/Reverse Clutch (.173") 14 or 15 Teeth	1	35676-50050
97155C	Pressure Plate, A340 Low/Reverse Clutch (.181") 14 or 15 Teeth	1	35676-50040
97155D	Pressure Plate, A340 Low/Reverse Clutch (.189") 14 or 15 Teeth	1	
97155E	Pressure Plate, A340 Low/Reverse Clutch (.197") 14 or 15 Teeth	1	

PART #	OIL SEALING RINGS	QTY.	REFERENCE #
97175	Ring Kit, A340 1985-Up	1	
97177	Ring, A340 Input Shaft (Metal) 1985-Up	3	35712-30020
97179	Ring, A340 Center Support (Metal) 1985-Up	2	35617-30020
97180	Ring, A340 Output Shaft (Metal) 1985-Up	1	35735-30021
57182AA	Ring, A340 Sun Gear (Metal) 1985-Up	2	35749-30010
97185	Ring, A340 Stator Support (Metal) 1985-Up	2	35617-30020
97195	Ring, 2nd Coast Servo Brake (Metal) 1985-Up	1	35865-30010
97195A	Ring, 2nd Coast Servo Brake (Metal) 1990-91	1	35617-32011

PART #	WASHERS & BEARINGS	QTY.	REFERENCE #
97200A	Washer Kit, A340 (6 Plastic) 1985-Up	1	
97210	Race, A340 Stator (.031") 1.857"OD (1.110"ID)	1	
97211	Bearing W/Race, A340 Stator (.130") 1.975"OD (1.136"ID)	1	
97213	Washer, A340 Overdrive Sprag (Front) 44 Teeth (.040" Thick) 2.630"ID 1985-Up	1	
97214	Washer, A340 Overdrive Sprag (Rear) 44 Teeth (.060" Thick) 1985-Up (4 Lugs On ID) 4 Side Grooves	1	
97216	Race, A340 Overdrive Planet (4 Tab) 1.642"OD (Front)	1	
97217	Bearing, A340 Overdrive Planet To Ring Gear (1.845"OD) (Also Fits A340 Forward Drum To Hub)	1-2	
97217AK	Bearing W/Race, A340 Overdrive Planet To Ring Gear (1.845"OD)	1	
97218	Race, A340 Overdrive Planet (4 Tab) 1.878"OD (Rear)	1	
97218AK	Race W/Bearing, A340 Overdrive Planet (4 Tab) 1.878"OD Race (1.600"OD Bearing) Retro Fits The 97217 & 97218	1	
97222	Race, A340 Overdrive Hub To Aluminum Support (1.875"OD)	1	
97222A	Race, A340 Overdrive Hub To Aluminum Support (2.313"OD)	1	
97223	Bearing, A340 Overdrive Hub To Aluminum Support (1.875"OD) (Also Fits A340 Forward Planet To Ring Gear #235)(For A 4 Gear Planet)	1-2	
97223A	Bearing W/Race, A340 Overdrive Hub To Aluminum Support (4 Tab Race)	1	
97224	Race, A340 Overdrive Hub To Aluminum Support (4 Tab) 1.875"OD (Also Fits A340 Forward Planet To Ring Gear #236) (For A 4 Gear Planet)	1-2	
97225	Race, A340 Forward Drum To Overdrive Support (2.00"OD)	1	
97226	Washer, A340 Direct Drum To Overdrive Supoprt (Plastic) 1 Tab	1	
97227	Bearing W/Race, A340 Forward Drum To Support (1.878"OD)	1	
97229	Washer, A340 Forward Drum To Direct Drum (Plastic) 3 Tab (2 7/8"OD)	1	
97231	Race, A340 Forward Drum To Hub (Front) 1.920"OD	1	
97232	Bearing, A340 Forward Drum To Hub (1.845"OD) (Use 97217)	1	
97233	Race, A340 Forward Drum To Hub (Rear) 1.840"OD	1	
97234	Race, A340 Forward Planet To Ring Gear (Front) 2.110"OD	1	
97235	Bearing, A340 Forward Planet To Ring Gear (1.875"OD)(For A 4 Gear Planet) (Use 97223)	1	
97235A	Bearing W/Race, A340 Forward Planet To Ring Gear (2.545"OD)(For A 5 Gear Planet)	1	
97236	Race, A340 Forward Planet To Ring Gear (4 Tab)(1.875"OD)(For A 4 Gear Planet)(Use 97224)	1	
97236A	Race, A340 Forward Planet To Ring Gear (5 Tab)(2.495"OD)(For A 5 Gear Planet)	1	
97237	Race, A340 Forward Planet To Sun Gear (1.868"OD)	1	
97238	Bearing, A340 Forward Planet To Sun Gear (1.875"OD)	1	
97240	Washer, A340 Sun Gear To Rear Hub (Front) (1.140"ID)	1	
97241	Bearing, A340 Sun Gear To Rear Hub (1.760"OD) 1.183"ID (.079" Thick)	1	
97241A	Bearing W/Races, A340 Sun Gear To Hub (2.128"OD) 1.092"ID (.155" Thick)	1	
97241B	Bearing W/Race, A340 Sun Gear To Rear Hub (1.732"OD)(1.088"ID)(.108" Thick)	1	
97242	Race, A340 Sun Gear To Rear Hub (Rear) 1.090"ID	1	
97244	Washer, A340 Shell To #1 One Way Clutch (Plastic) 3 Tab (3 1/4"OD)	1	
97247	Washer, A340 One Way Clutch To 2nd Brake Support (Plastic) 4 Notches On OD (2 7/8"OD)	1	
97248	Washer, A340 #2 One Way Clutch To Rear Planet (Plastic) 2 Inner Tabs (3 1/8"OD)	1	
97248A	Washer, A340 #2 One Way Clutch To Rear Planet (Plastic) 5 Inner Tabs (3 1/8"OD)	1	
97248B	Washer, A340 #2 One Way Clutch To Rear Planet (Plastic) With 2 Inner Tabs That Are Not Straight Across From Each Other	1	
97251	Washer, A340 Rear Planet To Rear Hub (Plastic) 2 Inner Tabs (3"OD)	1	
97251A	Washer, A340 Rear Planet To Rear Hub (Plastic) 5 Inner Tabs (3"OD)	1	
97254	Bearing W/Race, A340 Rear Hub To Case (2.264"OD)	1	

© Whatever It Takes Transmission Parts. Inc.

PART #	GASKETS & RUBBER COMPONENTS	QTY.	REFERENCE #
97300	Gasket, A340 Bottom Pan	1	
57305A	Gasket, A340 Extension Housing 1985-02	1	
97311	O-Ring, A340 Pump To Case	1	90301-99033
97320A	Gasket, A340E/A340F (Jeep) Valve Body Plate To Case (Upper) 1985-99	1	35433-30064
97320AA	Gasket, A340E/A340F/A343F (Jeep) Valve Body To Case (Upper) 2000-Up	1	
97320EA	Gasket, A340E/A340F Valve Body (Upper) (Tundra 1998-00)	1	
97321A	Gasket, A340#/A340F (Jeep) Valve Body To Plate (Lower) 1985-99	1	
97321AA	Gasket, A340E/A340F/A343F (Jeep) Valve Body To Plate (Lower) 2000-Up	1	
97321EA	Gasket, A340E/A340F Valve Body (Lower) (Tundra 1998-00)	1	
97326	Gasket, A340E/A340H Filter (1 Piece)	1	35336-35010
97326A	Gasket, A340E/A340H Filter (2 Piece)	1	
97386	Apply Tube, A650E Valve Body To Overdrive Support (1.992"Long)(.315"OD) 1998-06	1	35159-30010

PART #	TECHNICAL MANUALS	QTY.	REFERENCE #
97400	Technical Manual, A340 (30-80LE) (Isuzu)	1	ISUSY AW30-80LE
97400A	Technical Manual, A340 (Jeep AW-4)	1	
97401	Tech Manual On CD, A340 (30-80LE, Isuzu)	1	
97401A	Tech Manual On CD, A340 (Jeep AW-4)	1	
97401B	Tech Manual On CD, A340E/A340H (Mini CD)(Covers Transmission Assembly, Dis-assembly, Diagnosis & Trouble Shooting)(ATSG)	1	
97401T	Technical Manual On CD, A340 Transfer Case (Mini CD)(Covers Teardown And Assembly Of A340 Transfer Case)(ATSG)	1	

PART #	ELECTRICAL COMPONENTS	QTY.	REFERENCE #
97410	Neutral Switch, A340 (With 1 1/8" x 1/2" Connector)	1	
97410A	Neutral Switch, A340 (With 1 3/4" x 5/8" Connector)	1	
97410AA	Neutral Switch, A340 (With 1 3/8" x 7/8" Connector)	1	
97410B	Neutral Switch, A340 (With Wire Harness With 2 Round Connectors)	1	
97410BA	Neutral Switch, A340 (With Wire Harness With 1 Triangle Connector)	1	
97410BB	Neutral Switch, A340 (With Wire Harness With 1 Rectangle Connector)(With 7 Holes In Connector For Prongs To Plug Into)	1	
97410BC	Neutral Switch, A340 (With Wire Harness With 1 Rectangle Connector)(With 7 Prongs In The Connector)	1	
97420K	Solenoid Kit, A340E(AW-4), A340F, A340H (2 Shift & 1 Lock-Up) 1985-2004	1	52-9002
97420KA	Solenoid Kit, A340E/340F/340H (2 Shift & 1 Lock-Up) 1985-07 (With Universal Brackets For More Coverage)	1	
97420AK	Solenoid Kit, A340E (EPC, 2 Shift & Lock-Up With Brackets) 1998-05	1	
97420BK	Solenoid Kit, A341E (2 Shift Solenoids With Bracket) 1990-02 (Rostra)	1	52-9021
97420BAK	Solenoid Kit, A341E/A343E (Lock-Up Control, Accumulator Control & 2 Shift Solenoids) 90-Up	1	
67420CK	Solenoid Kit, A340E/A340F/A340H (2 Solenoids & 2 Brackets) 1985-07	1	
67421D	Solenoid, A340E/A340F/A340H Shift (With Bracket) 1985-04	2	
97425	Solenoid, A340E/A340F/A340H/A343F Lock-Up (With Bracket) 1985-08 (Rostra) (2 Way Shift) (Also Called "E" Or #3)(Toyota/Lexus A343F Shift 2 Way)(Tacoma 2002-08)(4 Runner 2002) (Tundra 2002-04)	1	52-0205
97425B	Solenoid, A341E/A343E Lock-Up Control (SL) 1990-02	1	
97425C	Solenoid, A341E (30-43LE) Lock-Up Control (Volvo Only)	1	
97431A	Solenoid, A340 EPC (SLT) 1998-07	1	
97436A	Sensor, A340 VSS (OE #: 89411-50010) 1985-Up	1	
97437A	Sensor, A340 Temperature (Screws Into Case Front) 8 1/2" Long Wire Harness, 2 Prong Connector	1	
97437B	Sensor, A340 Temperature (Screws Into Cooler Fitting)	1	
97437C	Sensor, A340 Temperature (Pushes Into Case) 11 1/2" Long Wire Harness) (2 Prong Connector)	1	
97446	Wire Harness, A340 Internal/External With 3 Internal Connector, 3 External Connectors (Main External Connector Is Rectangle With 7 Wires)	1	
97446A	Wire Harness, A340 Internal/External (With 4 Internal Connectors & 1 Sensor) (Main External Connector Is Rectangle With 8 Wires)	1	
97446AD	Wire Harness, A340 Internal/External (With 7 Internal Connectors & 1 Sensor) (Main External Connector Is Rectangle With 12 Wires)	1	
97446B	Wire Harness, A340 Internal (4 Connectors With Case Connector) Case Connector Is Rectangle With 5 Prongs (With Bracket)	1	
97446C	Wire Harness, A340 Internal (3 Connectors With Case Connector) Case Connector Is Square With 3 Prongs	1	
97453B	Solenoid, A341E/A343E Accumulator Control (SLN) 1990-Up	1	

© Whatever It Takes Transmission Parts. Inc.

PART #	MISC. COMPONENTS	QTY.	REFERENCE #
97490A	Vent, A340 Case (Metal) 5 1/2” Long	1	
97490B	Vent, A340 Cse (Plastic On Each End With Rubber Hose In Between) 6” Long	1	
97495A	Filter Spacer, A340 (Aluminum) 1 1/4” Deep (Bolts To Valve Body With 4 Bolts, Then Filter Bolts To Spacer) For Deep Pan	1	

PART #	HARD PARTS	QTY.	REFERENCE #
97510A	Pump Body W/Gears, A340 With .370” Thick Gears	1	
97510B	Pump Body W/Gears, A340 With .420” Thick Gears	1	
97510C	Pump Body W/Gears, A340 With .460” Thick Gears	1	
97520A	Stator, A340 (3 3/8” From Flat Surface To End Of Shaft)	1	
97520B	Stator, A340 (3” From Flat Surface To End Of Shaft)	1	
97549	Apply Ring, A340 2nd Brake Clutch (.475” Thick) Aluminum 1985-Up	1	
97549A	Apply Ring, A340 2nd Brake Clutch (.312” Thick) Aluminum 1985-Up	1	
97551	Drum, A340 Overdrive (33 Teeth Sun Gear) (2 Clutch)	1	
97551A	Drum, A340 Overdrive (33 Teeth Sun Gear) (1 Clutch)	1	
97551AA	Drum, A340 Overdrive (33 Teeth Sun Gear) (2 Clutch) With 32 Teeth Excitor Ring	1	
97551AB	Drum, A340 Overdrive (33 Teeth Sun Gear) (2 Clutch) With 16 Teeth Excitor Ring	1	
97551B	Drum, A340 Overdrive (31 Teeth Sun Gear) (2 Clutch)	1	
97551BA	Drum, A340 Overdrive (31 Teeth Sun Gear) (2 Clutch) With 16 Teeth Excitor Ring	1	
97551BB	Drum, A340 Overdrive (31 Teeth Sun Gear) (2 Clutch) With 32 Teeth Excitor Ring	1	
97554	Drum, A340 Forward Clutch (1 Check Ball) 1 1/16” From Piston To Top Of The Snap Ring Groove	1	
97554A	Drum, A340 Forward Clutch (1 Check Ball) 1 1/4” From Piston To Top Of The Snap Ring Groove	1	
97554B	Drum, A340 Forward Clutch (2 Check Ball) 1 1/4” From Piston To Top Of The Snap Ring Groove	1	
97554C	Drum, A340 Forward Clutch (No Check Ball) 1 5/16” From Piston To Top Of The Snap Ring Groove	1	
97555C	Drum, A340 Direct (6 Teeth Steels) 5”OD Piston (3/4” From Piston To Top Of the Snap Ring Groove)	1	
97555CA	Drum, A340 Direct (6 Teeth Steels) 4 5/8”OD Piston (3/4” From Piston To Top Of the Snap Ring Groove)	1	
97555D	Drum, A340 Direct (6 Teeth Steels) 5”OD Piston (15/16” From Piston To Top Of the Snap Ring Groove)	1	
97555DA	Drum, A340 Direct (6 Teeth Steels) 4 5/8”OD Piston (15/16” From Piston To Top Of the Snap Ring Groove)	1	
97555E	Drum, A340 Direct (24 Teeth Steels) 5 Clutch (5”OD Piston)	1	
97560	Piston Kit, A340 Overdrive Brake (6 1/4”OD) 1.843” Tall (Fits Support #630 With Cast # 8931)	1	
97560A	Piston Kit, A340 Overdrive Brake (6 1/4”OD) 1.755” Tall (Fits Support #630 With Cast # 8931)	1	
97560AA	Piston Kit, A340 Overdrive Brake (6 1/4”OD) 1.685” Tall (Fits Support # 630 With Cast # 8931)	1	
97560AB	Piston Kit, A340 Overdrive Brake (6 1/4”OD) 1.505” Tall (Fits Support #630 With Cast # 8931)	1	
97560AC	Piston Kit, A340 Overdrive Brake (6 1/4”OD) 1.585” Tall (Fits Support #630 With Cast # 8931)	1	
97560B	Piston Kit, A340 Overdrive Brake (6”OD) 1.847” Tall (Fits Support #630 With Cast # 8930)	1	
97560BA	Piston Kit, A340 Overdrive Brake (6”OD) 1.673” Tall (Fits Support #630 With Cast # 8930)	1	
97561	Piston Kit, A340 Overdrive Direct Clutch (4.965”OD) (.760” Thick) 1985-Up	1	
97562	Piston Kit, A340 2nd Brake Clutch (Without Apply ring)	1	
97564	Piston Kit, A340 Forward Clutch (.493” Thick Piston)	1	
97564B	Piston Kit, A340 Forward Clutch (.453” Thick Piston)	1	
97565	Piston Kit, A340 Direct Clutch (4 5/8”OD Piston)	1	
97565A	Piston Kit, A340 Direct Clutch (5”OD Piston)	1	
97567	Piston Kit, A340 Low/Reverse Clutch (2.645” Tall Piston)	1	
97567A	Piston Kit, A340 Low/Reverse Clutch (2.750” Tall Piston)	1	
97567B	Piston Kit, A340 Low/Reverse Clutch (2.925” Tall Piston)	1	
97580A	Planet, A340 Overdrive With Shaft (33 Teeth Sun Gear) 26 Splines 1985-Up (8 1/8” Overall Length)	1	
97580AA	Planet, A340 Overdrive With Shaft (33 Teeth Sun Gear) 20 Splines 1985-Up (8 1/8” Overall Length)	1	
97580AAK	Planet Kit, A340 Overdrive With Shaft (33 Teeth Sun Gear) 26 Splines (8 1/8” Overall Length) With 97551AA 2 Clutch With 32 Teeth Excitor Ring (Contains: 551, 867, 213, 650, 661, 214, 580, 216, 217, 218, 590, 600, 868)	1	
97580AAAK	Planet Kit, A340 Overdrive With Shaft (33 Teeth Sun Gear) 26 Splines (8 1/8” Overall Length) With 97551AB 2 Clutch With 16 Teeth Excitor Ring (Contains: 551, 867, 213, 650, 661, 214, 580, 216, 217, 218, 590, 600, 868)	1	
97580AABK	Planet Kit, A340 Overdrive With Shaft (33 Teeth Sun Gear) 26 Splines (8 1/8” Overall Length) With 97551 2 Clutch, No Excitor Ring (Contains: 551, 867, 213, 650, 661, 214, 580, 216, 217, 218, 590, 600, 868)	1	

© Whatever It Takes Transmission Parts. Inc.

PART #	HARD PARTS (Continued)	QTY.	REFERENCE #
97580AAGK	Planet Kit, A340 Overdrive With Shaft (33 Teeth Sun Gear) 20 Splines (8 1/8" Overall Length) With 97551 2 Clutch, No Excitor Ring (Contains: 551, 867, 213, 650, 661, 214, 580, 216, 217, 218, 590, 600, 868)(Race #222 Is 1.875"OD But Does Not Come In This Kit)	1	
97580AAGLK	Planet Kit, A340 Overdrive W/Shaft (33 Teeth Sun Gear)(20 Splines)(8 1/8" Overall Length) (With 97551 2 Clutch, No Excitor Ring)(With # 551, 867, 213, 650, 661, 214, 580, 216, 217, 218, 590, 600, 868) (Race #222 Is 2.313"OD But Does Not Come In This Kit)	1	
97580AAHK	Planet KIt, A340 Overdrive With Shaft (33 Teeth Sun Gear) 20 Splines (8 1/8" Overall Length) With 97551 2 Clutch With 16 Teeth Excitor Ring (With #551, 867, 213, 650, 661, 214, 580, 216, 217, 218, 590, 600, 868)(Race #222 Is 1.875"OD But Does Not Come In This Kit)	1	
97580AAHLK	Planet Kit, A340 Overdrive W/Shaft (33 Teeth Sun Gear)(20 Splines)(8 1/8" Overall Length) (With 975512 2 Clutch With 16 Teeth Excitor Ring)(With # 551, 867, 213, 650, 661, 214, 580, 216, 217, 218, 590, 600, 868)(Race #222 Is 2.313"OD But Does Not Come In This Kit)	1	
97580AB	Planet, A340 Overdrive With Shaft (33 Teeth Sun Gear) 20 Splines 1985-Up (8 3/4" Overall Length)	1	
97580ABAK	Planet Kit, A340 Overdrive With Shaft (33 Teeth Sun Gear) 20 Splines (8 3/4" Overall Length) (With 97551AB 2 Clutch With 16 Teeth Excitor Ring)(With # 551, 867, 213, 650, 661, 214,580, 216, 217, 218, 590, 600, 868) (Race # 222 Is 1.875"OD But Does Not Come In This Kit) (Can Use 97580ABBK But Must Sell A 97222A Also)	1	
97580ABK	Planet Kit, A340 Overdrive With Shaft (33 Teeth Sun Gear) 20 Splines (8 3/4" Overall Length) With 97551AA 2 Clutch With 32 Teeth Excitor Ring (Contains: 551, 867, 213, 650, 661, 214, 580, 216, 217, 218, 590, 600, 868)	1	
97580ABAK	Planet Kit, A340 Overdrive With Shaft (33 Teeth Sun Gear) 20 Splines (8 3/4" Overall Length) With 97551AB 2 Clutch With 16 Teeth Excitor Ring (Contains:551, 867, 213, 650, 661, 214, 580, 216, 217, 218, 590, 600, 868)(Race #222 Is 2.313"OD But Does Not Come With This Kit)	1	
97580ABBK	Planet Kit, A340 Overdrive W/Shaft (33 Teeth Sun Gear)(20 Splines)(8 3/4" Overall Length) (With 97551AB 2 Clutch With 16 Teeth Excitor Ring)(With # 551, 867, 213, 650, 661, 214, 580, 216, 217, 218, 590, 600, 868)(Race #222 Is 2.313"OD But Does Not Come In This Kit)	1	
97580B	Planet, A340 Overdrive With Shaft (31 Teeth Sun Gear) 26 Splines 1985-Up (8 1/8" Overall Length)	1	
97580BA	Planet, A340 Overdrive With Shaft (31 Teeth Sun Gear) 20 Splines 1985-Up (8 1/8" Overall Length)	1	
97580BAK	Planet Kit, A340 Overdrive With Sahft (31 Teeth Sun Gear) 20 Splines (8 1/8" Overall Length) With 97551BA 2 Clutch With 16 Teeth Excitor Ring (Contains: 551, 867, 213, 650, 661, 214, 580, 216, 217, 218, 590, 600, 868)	1	
97580BAAK	Planet Kit, A340 Overdrive With Shaft (31 Teeth Sun Gear) 20 Splines (8 1/8" Overall Length) With 97551BB 2 Clutch With 32 Teeth Excitor Ring (Contains: 551, 867, 213, 650, 661, 214, 580, 216, 217, 218, 590, 600, 868)	1	
97580BB	Planet, A340 Overdrive With Shaft (31 Teeth Sun Gear) 20 Splines 1985-Up (8 3/4" Overall Length)	1	
97580BBK	Planet Kit, A340 Overdrive With Shaft (31 Teeth Sun Gear) 20 Splines (8 3/4" Overall Length) With 97551BA 2 Clutch With 16 Teeth Excitor Ring (Contains: 551, 867, 213, 650, 661, 214, 580, 216, 217, 218, 590, 600, 868)	1	
97580BBAK	Planet Kit, A340 Overdrive With Shaft (31 Teeth Sun Gear) 20 Splines (8 3/4" Overall Length) With 97551BB 2 Clutch With 32 Teeth Excitor Ring (Contains: 551, 867, 213, 650, 661, 214, 580, 216, 217, 218, 590, 600, 868)	1	
97582A	Planet, A340 Forward (4 Gear)	1	
97582B	Planet, A340 Forward (5 Gear) Will Not Retro Fit 4 Gear	1	
97584A	Planet, A340 Rear (4 Gear) (Uses A 33 Teeth Sun Gear That Is Made Onto The Forward Sun Gear Shaft # 97612A)	1	
97584AA	Planet, A340 Rear (4 Gear) (Uses A 42 Teeth Sun Gear That Slides Off Of The Forward Sun Gear Shaft # 97612AA)	1	
97584B	Planet, A340 Rear (5 Gear)	1	
97590A	Ring Gear, A340 Overdrive Planet (33 Teeth Sun Gear) (4 5/8"OD)	1	
97590B	Ring Gear, A340 Overdrive Planet (31 Teeth Sun Gear) (5 1/4"OD)	1	
97592A	Ring Gear, A340 With Hub Forward Planet (4.645"OD)	1	
97592B	Ring Gear, A340 With Hub Forward Planet (4.487"OD) (16/16"ID Bushing) (For A 4 Gear Planet)	1	
97592BA	Ring Gear, A340 With Hub Forward Planet (4.487"OD) (1 5/8"ID Bushing) (For A 5 Gear Planet)	1	
97594A	Ring Gear,A340 Rear Planet (18 Lug)	1	
97600	Hub, A340 Overdrive Ring Gear (4"OD) (#222 Is 1 7/8"OD)	1	
97600A	Hub, A340 Overdrive Ring Gear (4"OD) (#222 Is 2 5/16"OD)	1	
97600B	Hub, A340 Overdrive Ring Gear (4 13/16"OD)	1	
97604	Hub, A340 Rear Ring Gear (4.040"OD)	1	
97612A	Sun Gear, A340 Forward (42 Teeth Front Sun Gear & 33 Teeth Rear Sun Gear That Is Made Onto The Shaft)	1	
97612AA	Sun Gear, A340 Forward (42 Teeth Front Sun Gear & 42 Teeth Rear Sun Gear #97614AA That Slides Off Of This Shaft)	1	

© Whatever It Takes Transmission Parts. Inc.

97614AA.....Sun Gear, A340 Rear (42 Teeth) Slides Off Of The Forward Sun Gear Shaft # 97612AA.....1 .....
97622.....Shell, A340 Input (8 Lug).....1 .....
97630.....Support, A340 Overdrive (Aluminum) Cast # 8930.....1 .....
97630A.....Support, A340 Overdrive (Aluminum) Cast # 8931.....1 .....
97632.....Support, A340 2nd Brake Clutch (16 Lug) 1985-Up.....1 .....

PART #	SPRAGS & ONE WAY CLUTCHES	QTY.	REFERENCE #
97642	One Way Clutch Assembly, A340 #1 One Way Clutch	1	
97650	Sprag, A340 Overdrive (24 Lugs)(.450" Wide) 1985-Up	1	
97652	One Way Clutch, A340 #1 One Way Clutch (Intermediate)	1	34601-30030
97654	One Way Clutch, A340 #2 One Way Clutch (Low)	1	35792-14020
97661	Outer Race, A340 Overdrive Sprag (44 Teeth) .530" Thick (2.830"ID) 1985-Up	1	
97664	Inner Race, A340 #2 One Way Clutch	1	

PART #	HARD PARTS (Continued)	QTY.	REFERENCE #
97678A	Output Shaft, A340 2WD (18 5/16") 23 Rear Splines	1	
97678AA	Output Shaft, A340 2WD (18 5/16") 21 Rear Splines	1	
97678AB	Output Shaft, A340 2WD (18 5/16") 26 Rear Splines	1	
97678AE	Output Shaft, A340 2WD (18 7/8") 27 Rear Splines	1	
97678B	Output Shaft, A340 4x4 (16 1/8") 23 Rear Splines (With .709"OD Pilot On Rear Of Shaft)	1	
97678BC	Output Shaft, A340 4x4 (16 1/4") 19 Rear Splines	1	
97678BE	Output Shaft, A340 2WD (16 1/2") 23 Rear Splines (With .630"OD Pilot On Rear Of Shaft) Bolt On Yoke (1 1/2" From Front Of Shaft To 1st Snap Ring Groove)	1	
97678BF	Output Shaft, A340 2WD (16 1/2") 23 Rear Splines (With .630"OD Pilot On Rear Of Shaft) Bolt On Yoke (1 1/4" From Front Of Shaft To 1st Snap Ring Groove)	1	
97678C	Output Shaft, A340 4x4 (13 5/16") 27 Rear Splines	1	
97678CA	Output Shaft, A340 4x4 (13 5/16") 23 Rear Splines	1	
97678CB	Output Shaft, A340 4x4 (13 5/16") 21 Rear Splines	1	
97678DA	Output Shaft, A340 4x4 (11 9/16") 23 Rear Splines	1	
97678E	Output Shaft, A340 4x4 (12 5/16") 23 Rear Splines (1 1/8" From Rear End Of Shaft To Snap Ring Groove)	1	
97678EA	Output Shaft, A340 4x4 (12 7/16") 23 Rear Splines (1 11/16" From Rear End Of Shaft To Snap Ring Groove)	1	
97678F	Output Shaft, A340 2WD (14 1/8")	1	
97678FB	Output Shaft, A340 2WD (14 7/8") 23 Rear Splines (No Pilot On Rear Of Shaft) Bolt On Yoke	1	
97678GA	Output Shaft, A340 2WD (15") Bolt On Yoke	1	
97680	Rotor, A340 Speed Sensor (Aluminum) With Magnet	1	
97680B	Rotor, A340 Speed Sensor (Steel) With 4 Legs	1	
97740A	Valve Body, A340 (3 Solenoid) Uses 1 Tube To Case	1	
97740AA	Valve Body, A340 (3 Solenoid) (Uses 2 Tubes To Case)(Cast # 8930 On Case Side And Cast # 8931 On Filter Side)	1	
97740AB	Valve Body, A340 (3 Solenoid) (Uses 2 Tubes To Case)(Cast # 8930 On Case Side And Cast # 8930 On Filter Side)	1	
97740AE	Valve Body, A340 (3 Solenoid) (3 Tubes To Case)(With Cable Operated Throttle Valve) (Cast # 8930 On Case Side And Cast # 8931 On Filter Side)	1	
97740B	Valve Body, A340 (3 Solenoid) (3 Tubes To Case) (Cast # 8930 On Case Side & Cast # 8930 On Filter Side)	1	
97740BA	Valve Body, A340 (3 Solenoid) (No Tubes To Case) (With Cable Operated Throttle Valve) (Cast # 8938)	1	
97740C	Valve Body, A340 (4 Solenoid) (No Tubes To Case) (With Solenoid Operated Throttle Valve) (Has An Accumulator That Looks Like A Solenoid With No Connector) (Cast # 8935)	1	
97740CA	Valve Body, A340 (4 Solenoid) (1 Tube To Case) (With Solenoid Operated Throttle Valve) (Has An Accumulator That Looks Like A Solenoid With No Connector) (Cast # 8935)	1	
97740CAA	Valve Body, A340 (4 Solenoid)(1 Tube To Case)(With Cable Operated Throttle Valve) (Has An Accumulator That Looks Like A Solenoid With No Connector)(Cast # 8935)	1	
97740CB	Valve Body, A340 (4 Solenoid) (2 Tubes To Case) (With Solenoid Operated Throttle Valve) (Has An Accumulator That Looks Like A Solenoid With No Connector) (Cast # 8935)	1	
97740CC	Valve Body, A340 (4 Solenoid) (No Tubes To Case) (With Solenoid Operated Throttle Valve) (Has An Accumulator That Looks Like A Solenoid With No Connector) (Cast # 8938)	1	
97740CD	Valve Body, A340 (4 Solenoid) (No Tubes To Case) (With Cable Operated Throttle Valve) (Cast # 8932)	1	
97740CE	Valve Body, A340 (4 Solenoid) (No Tubes To Case) (No Throttle Valve) (Cast # 8932)	1	
97740D	Valve Body, A343F (5 Solenoids) 1998-Up	1	
97740DA	Valve Body, A341E (5 Solenoids) 1993-Up	1	

© Whatever It Takes Transmission Parts. Inc.

PART #	VALVE BODY COMPONENTS	QTY.	REFERENCE #
97741-1A	Manual Valve, A340 (5 3/8"Long) 1985-Up	1	
S97741-6AK	Retainer Set, A340 Valve (Rectanglar) (.654" x .236") 10 Per Pack (Sonnax)	1	
S97741-6BK	Retainer Set, A340 Valve (Rectanglar) (.592" x .198") 10 Per Pack (Sonnax)	1	
S97741-6CK	Retainer Set, A340 Valve (Rectanglar) (.572" x .198") 10 Per Pack (Sonnax)	1	
S97741-6DK	Retainer Set, A340 Valve (Rectanglar) (.832" x .193") 10 Per Pack (Sonnax)	1	
S97741-6EK	Retainer Set, A340 Valve (Rectanglar) (.645" x .203") 10 Per Pack (Sonnax)	1	
S97741-6FK	Retainer Set, A340 Valve (Rectanglar) (.551" x .195") 10 Per Pack (Sonnax)	1	

PART #	VALVE BODY COMPONENTS (Continued)	QTY.	REFERENCE #
S97741CK	Sleeve Kit, A340 Lock-Up Relay Valve (Contains: 1 Inboard Sleeve, 1 Outboard Sleeve, 1 Seperating Spring & 1 Retaining Spring)(Sonnax)(This Only Fits The 3 Solenoid Valve Body)	1	
S97741E-ZK	Zip Kit, A340E 2000-Up (Sonnax)	1	
S97741H-4	Pin, A340 Valve Body Plug Pins (Solid) 10 Per Pack (Sonnax)	1	
S97741N-4K	Retainer Set, A340 Throttle Valve Stop (10 Per Pack) Sonnax	1	
S97741PAK	Pressure Regulator Assembly, A340 (Oversize Valve With Spring & Shim) Sonnax (Must Use T-89010-TL Reamer)	1	
T-89010-TL	Reamer, For S97741PAK (Sonnax)	1	
S97741PBK	Secondary Pressure Regulator Valve Kit, A340 (Oversize)(Contains: Valve, End Plug, And 2 O-Rings)(Sonnax)(Must Use T-F-39741-TL11)	1	
T-F-39741-TL11	Tool For S97741PBK	1	
S97741RK	Valve Kit, A340E/A340F Dual Ratio Boost Valve (Contains: Boost Sleeve, Cutback Boost Valve, Reverse Boost Valve, 1 Small Diameter EPC Boost Valve, 1 Large Diameter EPC Boost Valve, (.015"Thick) Shim, & (.032"Thick Shim) 2000-Up (Sonnax)	1	
S97741T-2	Sleeve, A340 TV Boost Valve (Sonnax)	1	
S97741TK	Valve & Sleeve, A340 TV Boost (.566"OD)(.523"OD Valve)(Sonnax)	1	
S97741TAK	Valve & Sleeve, A340 TV Boost (.546"OD)(.480"OD Valve)(Sonnax)	1	

PART #	HARD PARTS (Continued)	QTY.	REFERENCE #
97750A	Bell Housing, A340 (Cast # 8930 By Bottom Case Bolt Rear)	1	
97750B	Bell Housing, A340 (Cast # 8934 By Bottom Case Bolt Rear)	1	
97750C	Bell Housing, A340 (Cast # 8936 By Bottom Case Bolt Rear)	1	
97750D	Bell Housing, A340 (Cast # 8931 By Bottom Case Bolt Rear)	1	
97750E	Bell Housing, A340 (Cast # 8948 By Bottom Case Bolt Rear)	1	
97750F	Bell Housing, A340 (Cast # 8939 By Bottom Case Bolt Rear)	1	
97750G	Bell Housing, A340 (Cast # 8942 By Bottom Case Bolt Rear)	1	
97750H	Bell Housing, A340 (Cast # 8937 By Bottom Case Bolt Rear)	1	
97750J	Bell Housing, A340 (Cast # 8946 By Bottom Case Bolt Rear)	1	
97750K	Bell Housing, A340 (Cast # 8928 By Bottom Case Bolt Rear)	1	
97750L	Bell Housing, A340 (Cast # 8929 By Bottom Case Bolt Rear)	1	
97750M	Bell Housing, A340 (Cast # 8925 By Bottom Case Bolt Rear)	1	
97750MA	Bell Housing, A340 (Cast # 8924 By Bottom Case Bolt Rear)	1	
97750N	Bell Housing, A340 (Cast # 8944 By Bottom Case Bolt Rear)	1	
97750P	Bell Housing, A340 (Large Cast Letter "F" On Top Outside)	1	
97760A	Case, A340 (3 Oil Holes To Extension Housing) 6/8 Bolt Extension Housing (No Pulse Generator) No Top Mount (No Thread Hole In Front Of The Cooler Line Fitting) Cast # 8930 Above Metal Tag	1	
97760AA	Case, A340 (3 Oil Holes To Extension Housing) 6/8 Bolt Extension Housing (No Pulse Generator) No Top Mount (With Threaded Hole In Front Of The Cooler Line Fitting)	1	
97760AB	Case, A340 (2 Oil Holes To Extension Housing) 6/8 Bolt Extension Housing (No Pulse Generator) No Top Mount (No Threaded Hole In Front Of The Cooler Line Fitting)	1	
97760AC	Case, A340 (2 Oil Holes To Extension Housing) 6/8 Bolt Extension Housing (No Pulse Generator) No Top Mount (With Threaded Hole In Front Of The Cooler Line Fitting)	1	
97760AD	Case, A340 (2 Oil Holes To Extension Housing) 6/8 Bolt Extension Housing (1 Pulse Generator) No Top Mount (No Threaded Hole In Front Of The Cooler Line Fitting)	1	
97760AE	Case, A340 (2 Oil Holes To Extension Housing) 6/8 Bolt Extension Housing (2 Pulse Generators) No Top Mount (No Threaded Hole In Front Of The Cooler Line Fitting)	1	
97760AM	Case, A340 (2 Oil Holes To Extension Housing) 6/8 Bolt Extension Housing (No Pulse Generator) 4 Hole Top Mount (No Threaded Hole In Front Of The Cooler Line Fitting) Cast # 8934 Above Metal Tag	1	
97760AN	Case, A340 (2 Oil Holes To Extension Housing) 6/8 Bolt Extension Housing (With Pulse Generators) 4 Hole Top Mount (No Threaded Hole In Front Of The Cooler Line Fitting)	1	
97760B	Case, A340 (2 Oil Holes To Extension Housing) 7 Bolt Extension Housing (No Pulse Generator) No Top Mount (With Threaded Hole In Front Of The Cooler Line Fitting) Cast # 8980 Above Metal Tag	1	
97760BA	Case, A340 (2 Oil Holes To Extension Housing) 7 Bolt Extension Housing (1 Pulse Generator) No Top Mount (No Threaded Hole In Front Of The Cooler Line Fitting) Cast # 8980 Above Metal Tag	1	

© Whatever It Takes Transmission Parts. Inc.

1-800-940-0197

97760BB.....Case, A340 (3 Oil Holes To Extension Housing) 7 Bolt Extension Housing (No Pulse Generator) No Top Mount (With Threaded Hole In Front Of Cooler Line Fitting).....1
97760D.....Case, A340 (1 Oil Hole To Extension Housing) 6/8 Bolt Extension Housing (1 Hole Pulse Generator) No Thread Hole In Front Of The Cooler Line Fitting (Cast # 8835) Tag # 35-50LS (Has A Caged Needle Bearing In Rear Of Case).....1

PART #	CASE COMPONENTS	QTY	REFERENCE #
97761C	Check Ball Capsule, A340 With Spring (In Case Under Valve Body) Plastic Housing	1	

PART #	HARD PARTS (Continued)	QTY	REFERENCE #
97765A	Pan, A340 (3 7/8” At Deep End) 9 1/2” Tube On Drivers Side (From Drivers Side Tube Angles Up At 10:00)	1	
97765AA	Pan, A340 (3 7/8” At Deep End) 9 1/2” Tube On Drivers Side (From Drivers Side Tube Angles Up At 11:30)	1	
97765AE	Pan, A340 (3 7/8” At Deep End) 12 1/4” Tube On Drivers Side	1	
97765AG	Pan, A340 (3 7/8” At Deep End) 13 1/4” Tube On Passengers Side	1	
97765B	Pan, A340 (2 /3/4” At Deep End) 8 3/4” Tube On Passengers Side (From Passengers Side Tube Angles Up At 12.30)	1	
97765BA	Pan, A340 (2 1/8” At Deep End) 7 3/4” Tube On Passengers Side	1	
97765BB	Pan, A340 (2 1/8” At Deep End) 7 3/4” Tube On Drivers Side	1	
97765BC	Pan, A340 (2 1/8” At Deep End) 11 3/4” Tube On Drivers Side	1	
97765C	Pan, A340 (2 1/2” At Deep End) 15” Tube Drivers Side	1	
97770A	Extension Housing, A340 2WD (8 3/4”) 6 Bolt (4 Bolt Bottom V Mount) Speed-O Hole On Passengers Side (Sensor Hole On Drivers Side) Cast # 8900	1	
97770AA	Extension Housing, A340 2WD (8 3/4”) 6 Bolt (4 Bolt Bottom V Mount) Speed-O Hole & Sensor Hole On Drivers Side With 3 Threaded Bosses	1	
97770AB	Extension Housing, A340 2WD (8 3/4”) 6 Bolt (4 Bolt Bottom V Mount) Speed-O Hole & Sensor Hole On Drivers Side With 2 Threaded Bosses (Cast # 8963)	1	
97770AE	Extension Housing, A340 2WD (8 3/4”) 6 Bolt (4 Bolt V Mount & 4 Bolt Flat Bottom Mount & A 4 Bolt Top Flat Mount) Speed-O Hole On Passengers Side, Sensor Hole On Drivers Side (Cast # 8921)	1	
97770B	Extension Housing, A340 2WD (8 3/4”) 7 Bolt (2 Bolt Bottom Flat Mount) Speed-O Hole On Drivers Side	1	
97770BE	Extension Housing, A340 2WD (8 5/8”) 7 Bolt (2 Bolt Bottom Flat Mount) 2”ID Speed-O Hole & Sensor Hole On Drivers Side (Cast # 8916 On Passengers Side)	1	
97770C	Extension Housing, A340 2WD (8 3/4”) 6 Bolt (2 Stud Bottom Mount) Speed-O & Sensor Hole On Drivers Side	1	
97770D	Extension Housing, A340 2WD (8 3/4”) 6 Bolt (4 Bolt Bottom Flat Mount) Speed-O & Sensor Hole On Drivers Side With 3 Threaded Bosses	1	
97770E	Extension Housing, A340 2WD (8 3/4”) 6 Bolt (6 Bolt Top Flat Mount) Speed-O Hole On Passengers Side (Cast # 8912 In Top Mount)	1	
97770F	Extension Housing, A340 2WD (5 1/2”) 7 Bolt (4 Bolt Bottom V Mount) 4 Bolt Cover On Top (Looks Like A 4x4 But Is Not)	1	
97770G	Extension Housing, A340 2WD (5”) 6 Bolt (4 Bolt Flat Rear Facing Mount) Speed-O Hole On Passengers Side (Cast # 8907 Rear Bottom)	1	
97770GA	Extension Housing, A340 2WD (5”) 6 Bolt (4 Bolt Flat Rear Facing Mount) No Speed-O Hole (Cast # 8917 Rear Bottom)	1	
97770H	Extension Housing, A340 2WD (4 3/4”) 6 Bolt (4 Bolt Bottom Flat Mount) Speed-O Hole On Passengers Side, Sensor Hole On Drivers Side	1	
97770J	Extension Housing, A340 2WD (3 3/4”) 6 Bolt (4 Bolt Flat Rear Facing Mount) No Speed-O Hole	1	
97770L	Extension Housing, A340 4x4 (6 1/4”) 7 Bolt (4 Bolt Cover On Top) Sensor On Passengers Side	1	
97770M	Extension Housing, A340 4x4 (5”) 8 Bolt (2 Bolt Bottom Mount) Sensor On Drivers Side (1.863”ID Seal)	1	
97770MA	Extension Housing, A340 4x4 (5”) 8 Bolt (2 Bolt Bottom Mount) Sensor On Drivers Side (1.914”ID Seal)	1	
97770N	Extension Housing, A340 4x4 (4 1/2”) 6 Bolt (4 Bolt Top Flat Mount) Sensor On Passengers Side (Cast # 36117-8906 Top Front)	1	
97770P	Extension Housing, A340 4x4 (3 5/8”) 7 Bolt (Sensor On Passengers Side) 1.914”ID Seal	1	
97770Q	Extension Housing, A340 4x4 (3 1/2”) 7 Bolt (2 Bolt Bottom Flat Mount) No Sensor (1.800”ID Seal)	1	
97770QA	Extension Housing, A340 4x4 (3 1/2”) 7 Bolt (2 Bolt Bottom Flat Mount) Sensor On Drivers Side (1.800”ID Seal) Cast # 8930 Inside Front	1	
97774	Housing, A340 Driven Speed-O Gear (Cable Type)	1	
97774E	Housing, A340 Driven Speed-O Gear (With 3 Prong Connector)(With Outside Of Connector At 12:00, The Bolt Hole Is At 6:30)	1	

© Whatever It Takes Transmission Parts. Inc.

PART #	HARD PARTS (Continued)	QTY	REFERENCE #
97774EA	Housing, A340 Driven Speed-O Gear (With 3 Prong Connector)(With Outside Of Connector At 12:00, The Bolt Hole Is At 10:00)	1	
97774EB	Housing, A340 Driven Speed-O Gear (With 3 Prong Connector)(With Outside Of Connector At 12:00, The BOlt Hole Is At 1:00)	1	
57775	Bolt, A340 Converter (8 x 1.25mm)	AR	
67775	Bolt, A340 Converter (9 x 1.25mm)	AR	
97776A	Bolt Set, A340 Bell To Case (6 Per Set)	1	
97777AK	Bolt Set, A340 Pump To Case (7pcs)(12mm Hex)(1.650”Long)	1	
97778K	Bolt Set, A340 Pump Stator To Body (13 Per Set)	1	
97779K	Bolt Set, A340 Bottom Pan To Case (19 Per Set)	1	
97782AK	Bolt Set, A340 Valve Body To Case (17 Per Set)	1	
97782BK	Bolt Set, A340 Valve Body To Case (20 Per Set)	1	
97783K	Bolt Set, A340 Case To Overdrive Support (2 Per Set)	1	
97844	Key, A340 Holds Speed Rotor To Output Shaft	1	
97848	Gear, A340 Driven Speed-O (17 Teeth)	1	
97848A	Gear, A340 Driven Speed-O (18 Teeth)(2.280” Long)	1	
97848A-1	Gear, A340 Driven Speed-O (18 Teeth)(3.250” Long)	1	
97848AA	Gear, A340 Driven Speed-O (19 Teeth)	1	
97853	Cushion, A340 Forward Clutch Steel (8 Teeth)	1	35672-30010
97859	Cushion, A340 Low/Reverse Clutch (.079” Thick) Beveled	1	
97860	Snap Ring, A340 Holds Aluminum Support In Case 1985-Up (7 3/16”OD) With 2 Eyelets In Ends	1	
97861	Snap Ring, A340 Holds Overdrive Pressure Plate In Case	1	
97862	Snap Ring, A340 Holds Overdrive Brake Clutch Retainer In (6 5/8”OD) .193” Thick ID To OD	1	
97862A	Snap Ring, A340 Holds Overdrive Brake Clutch Retainer In (6 5/8”OD) .174” Thick ID To OD	1	
97864	Snap Ring, A340 Holds Overdrive Direct Clutch Pressure Plate In 1985-Up (5 5/16”OD) .245” Thick ID To OD (Also Fits A340 Holds Forward Clutch Pressure Plate In Drum)	1-2	
97865	Snap Ring, A340 Holds Overdrive Direct Clutch Retainer In	1	
97867	Snap Ring, A340 Holds Overdrive Sprag To Overdrive Planet 1985-Up (.038” Thick) .190” Thick ID To OD (3 15/16”OD)	1	
97868	Snap Ring, A340 Holds Overdrive Hub To ring Gear (4 1/4”OD)	1	
97868A	Snap Ring, A340 Holds Overdrive Hub To Ring Gear (5 1/4”OD)	1	
97872	Snap Ring, A340 Holds 2nd Brake Support In Case (5 7/8”OD) .118” Thick	1	
97873	Snap Ring, A340 Holds 2nd Brake Clutches In Case (5 9/16”OD) .062” Thick	1	
97874	Snap Ring, A340 Holds 2nd Brake Retainer In	1	
97876	Snap Ring, A340 Holds Forward Pressure Plate In Drum (Use 97864)	1	
97877	Snap Ring, A340 Holds Forward Clutch Retainer In Drum	1	
97878	Snap Ring, A340 Holds Direct Clutch Pressure Plate In Drum (Fits Drum With 6 Tooth Steels) 5 1/2”OD	1	
97878B	Snap Ring, A340 Holds Direct Clutch Pressure Plate In Drum (Fits Drum With 24 Tooth Steels) 5 3/4”OD	1	
97879	Snap Ring, A340 Holds Direct Clutch Retainer In Drum	1	
97885	Snap Ring, A340 Holds Low/Reverse Clutch Retainer In Case	1	
97886	Snap Ring, A340 Holds Shell To Sun Gear (Rear) Flat (.049” Thick)	1	
97887	Snap Ring, A340 Holds Shell To Sun Gear (Front) Round Wire (.090” Thick)	1	
97888	Snap Ring, A340 Holds #2 One Way Clutch In Rear Planet	1	
97889	Snap Ring, A340 Holds Rear Hub To Rear Ring Gear (4 7/16”OD)	1	
97894	Snap Ring, A340 Holds Forward Planet To Output Shaft	1	
97895	Snap Ring, A340 Holds Speed Sensor To Output Shaft	2	
97896	Snap Ring, A340 Holds Servo Cover On Case	1	
97905	Servo Assembly, A340 (2 7/8” Pin)	1	
97905A	Servo Assemlby, A340 (3 1/8” Pin)	1	
97906	Spring, A340 Servo	1	
97907	Piston, A340 Servo (Fits 2 7/8” Pin)	1	
97907A	Piston, A340 Servo (Fits 3 1/8” Pin)	1	
97909	Cover, A340 Servo (Fits Servo With 2 7/8” Pin)	1	
97909A	Cover, A340 Servo (Fits Servo With 3 1/8” Pin)	1	
97916	Pin, A340 Band Anchor (In Case)	1	
97925	Accumulator Assembly, A340 (4 Pistons With 7 Loose Springs)	1	
97925A	Accumulator Assembly, A340 (4 Pistons With Springs Attached)	1	
97960	Piston, A340 Overdrive Brake Clutch (6 1/4”OD) 1.843” Tall (Fits Support #630 With Cast # 8931)	1	
97960A	Piston, A340 Overdrive Brake Clutch (6 1/4”OD) 1.755” Tall (Fits Support #630 With Cast # 8931)	1	
97960AA	Piston, A340 Overdrive Brake Clutch (6 1/4”OD) 1.685” Tall (Fits Support # 630 With Cast # 8931)	1	
97960AB	Piston, A340 Overdrive Brake Clutch (6 1/4”OD) 1.505” Tall (Fits Support # 630 With Cast # 8931)	1	

TOYOTA

© Whatever It Takes Transmission Parts. Inc.

97960AC.....Piston, A340 Overdrive Brake Clutch (6 1/4”OD)(1.585” Tall)(Fits Support # 630 With Cast # 8931) 1
97960B .....Piston, A340 Overdrive Brake Clutch (6”OD) 1.847” Tall (Fits Support #630 With Cast # 8930).....1
97960BA.....Piston, A340 Overdrive Brake Clutch (6”OD) 1.673” Tall (Fits Support #630 With Cast # 8930).....1
97961.....Piston, A340 Overdrive Clutch 1
97962.....Piston, A340 2nd Brake Clutch 1
97964.....Piston, A340 Forward Clutch (.493” Thick).....1
97964B .....Piston, A340 Forward Clutch (.453” Thick).....1
97965.....Piston, A340 Direct Clutch (4 5/8”OD) 1
97965A .....Piston, A340 Direct Clutch (5”OD) 1
97967.....Piston Set, A340 Low/Reverse Clutch (2.645” Tall) 3 Piece (The Largest Piston Is 2.645” Overall Height) 1
97967A .....Piston Set, A340 Low/Reverse Clutch (2.750” Tall) 3 Piece (The Largest Piston Is 2.750” Overall Height) 1
97967B .....Piston Set, A340 Low/Reverse Clutch (2.925” Tall) 3 Piece (The Largest Piston Is 2.925” Overall Height) 1
97970.....Retainer W/Springs, A340 Overdrive Brake Clutch (6 1/4”OD).....1
97970B .....Retainer W/Springs, A340 Overdrive Brake Clutch (6”OD).....1
97971.....Retainer W/Springs, A340 Overdrive Direct Clutch Return.....1
97972.....Retainer W/Springs, A340 2nd Brake Clutch Return 1
97974.....Retainer W/Springs, A340 Forward Clutch Return.....1
97975.....Retainer W/Springs, A340 Direct Clutch Return 1
97977.....Retainer W/Springs, A340 Low/Reverse Clutch (20 Springs).....1
97977A .....Retainer W/Springs, A340 Low/Reverse Clutch (18 Springs).....1
97977B .....Retainer W/Springs, A340 Low/Reverse Clutch (16 Springs).....1
97982.....Retainer, A340 2nd Brake Clutch 1
97991.....Linkage Assembly, A340 Internal (Manual Lever Passenger Side).....1
97991A .....Linkage Assembly, A340 Internal (Manual Lever Drivers Side) 1
97991A-6 .....Bracket, A340 Park Rod (3 Bolt) 1
97991B-6 .....Bracket, A340 Park Rod (2 Bolt) 1
97994.....Actuator, A340 Park Rod (12”) 1
97994A .....Actuator, A340 Park Rod (19”) 1
97995.....Park Pawl Assembly, A340.....1
97996.....Fitting, A340 Cooler Line (Straight) 2” Tall 1
97996A .....Fitting, A340 Cooler Line (Elbow) 2” Tall 1
97996AA.....Fitting, A340 Cooler Line (Elbow With Small Threaded Hole On Top) 1
97996AB.....Fitting, A340 Cooler Line (Elbow) 3 1/2” Tall 1
97996AC.....Fitting, A340 Cooler Line (Elbow) 3 1/2” Tall With Electric Sensor In The Side 1
97999.....Tube Set, A340 (3 Tube Type) 1
97999A .....Tube Set, A340 (2 Tube Type) Tubes Are 3 1/2” Tall.....1
97999AA.....Tube, A340 (2 Tube Type) Tubes Are 1 1/2” Tall 1
97999B .....Tube Set, A340 (1 Tube Type) 1

© Whatever It Takes Transmission Parts. Inc.

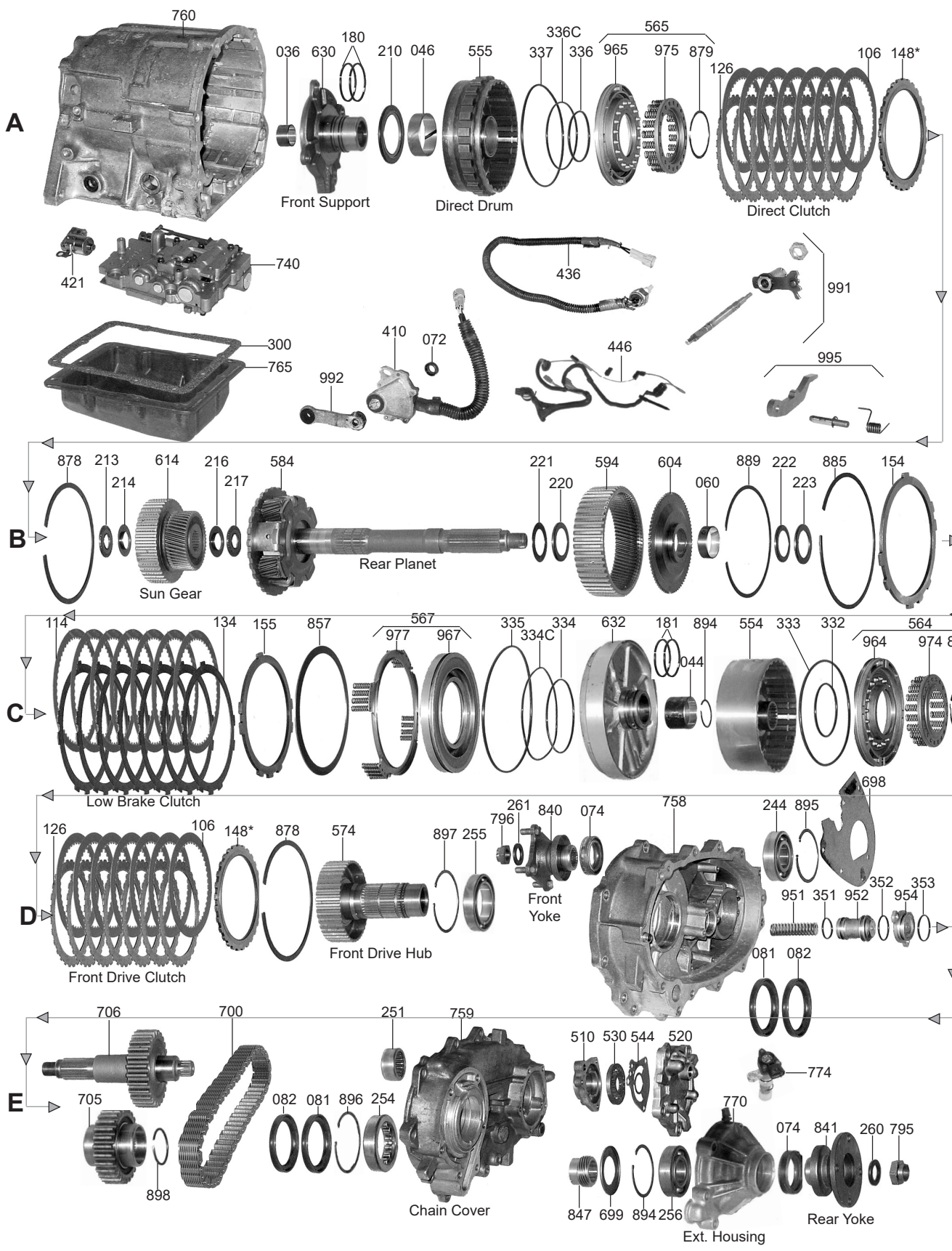

000 P&R Kit

002 OHK Kit

004 Master L/Steels Kit

006 Master W/Steels Kit

030 Bushing Kit

175 Ring Kit

400 Technical Manual

TOYOTA

PART #	PAPER & RUBBER KIT	QTY.	REFERENCE #
197000	Paper & Rubber Kit, R150 Truck Transfer Case	1	

PART #	OVERHAUL KITS	QTY.	REFERENCE #
197002	Overhaul Kit, R150F Truck Transfer Case	1	

PART #	MASTER L/STEEL KIT	QTY.	REFERENCE #
197004	Master L/Steels Kit, R150 Truck Transfer Case	1	

PART #	MASTER W/STEEL KIT	QTY.	REFERENCE #
197006	Master W/Steels Kit, R150 Truck Transfer Case	1	

PART #	BUSHINGS	QTY.	REFERENCE #
197030A	Bushing Kit, R150F	1	
197036	Bushing, R150F Front Support (Inner) 1985-Up	1	
197046A	Bushing, R150 Direct Drum	1	
197066A	Bushing, R150F Extension Housing	1	

PART #	METAL CLAD SEALS	QTY.	REFERENCE #
197070A	Seal, R150F Chain Case (Front & Rear) 1985-88	2	
197070AB	Seal, R150F Chain Case (Front & Rear) Inner 1989-Up (V6 1987-Up)	1	
197070AC	Seal, R150F Chain Case (Front & Rear) Outer 1989-Up (V6 1987-Up)	1	
197074A	Seal, R150F Output Flange, R150F 1985-Up	2	

PART #	FRICTION CLUTCH	QTY.	REFERENCE #
197106A	Friction, R150F Direct & Front Clutch (.067") 1985-Up	10-14	34653-35020
197114A	Friction, R150F Low Clutch (.067") 1985-Up	4-7	35683-35020

PART #	STEEL CLUTCH	QTY.	REFERENCE #
197126A	Steel, R150F Direct & Front Clutch (.071") 1985-Up	5-7	
197126AA	Steel, R150F Direct & Front Clutch (.100") 1989-Up	AR	
197134A	Steel, R150F Low Clutch (.071") 1985-Up	6	

PART #	CLUTCH PRESSURE PLATES	QTY.	REFERENCE #
197146	Pressure Plate, R150F Direct 1985-Up (Also Fits Front Drive)	1-2	
197148	Pressure Plate, R150F Front Drive 1985-Up (Use 197146)	1	
197154	Pressure Plate, R150F Low Brake (Front) 1985-Up	1	
197155	Pressure Plate, R150F Low Brake (Rear) 1985-Up	1	

PART #	OIL SEALING RINGS	QTY.	REFERENCE #
197175A	Ring Kit, R150F 1985-Up	1	
197180A	Ring, R150F Front Support	2	35617-22010
197181A	Ring, R150F Center Support 1985-Up	2	35617-22020

PART #	WASHERS & BEARINGS	QTY.	REFERENCE #
197210	Bearing, R150F Front Support To Direct Drum	1	
197213	Race, R150F Direct Drum To Sun Gear	1	
197214	Bearing W/Race, R150F Direct Drum To Sun Gear	1	
197216	Race, R150F Sun Gear To Planet	1	
197217	Bearing W/Race, R150F Sun Gear To Planet	1	
197220	Bearing, R150F Planet To Ring Gear Hub	1	
197221	Race, R150F Planet To Ring Gear Hub	1	
197223	Bearing W/Race, R150F Ring Gear Hub To Center Support	1	

PART #	GASKETS & RUBBER COMPONENTS	QTY.	REFERENCE #
197300	Gasket, R150F Bottom Pan	1	35178-30010

© Whatever It Takes Transmission Parts. Inc.

PART #	TECHNICAL MANUALS	QTY.	REFERENCE #
197400	Technical Manual, R150F	1	83-34055TM

PART #	HARD PARTS	QTY.	REFERENCE #
197555	Drum, R150F Direct Clutch 1985-Up	1	
197565	Piston Kit, R150F Direct Clutch 1985-Up	1	
197584A	Planet, R150 Rear W/Output Shaft (4 Gear)(14” Long)		
197630A	Front Support, R150 (Direct Drum Support)	1	
197632	Center Support, R150F	1	
197740	Valve Body, R150F (Toyota Auto Transfer Case) With 1 Solenoid	1	
197765	Pan, R150F Transfer Case	1	

© Whatever It Takes Transmission Parts. Inc.

© Whatever It Takes Transmission Parts. Inc.

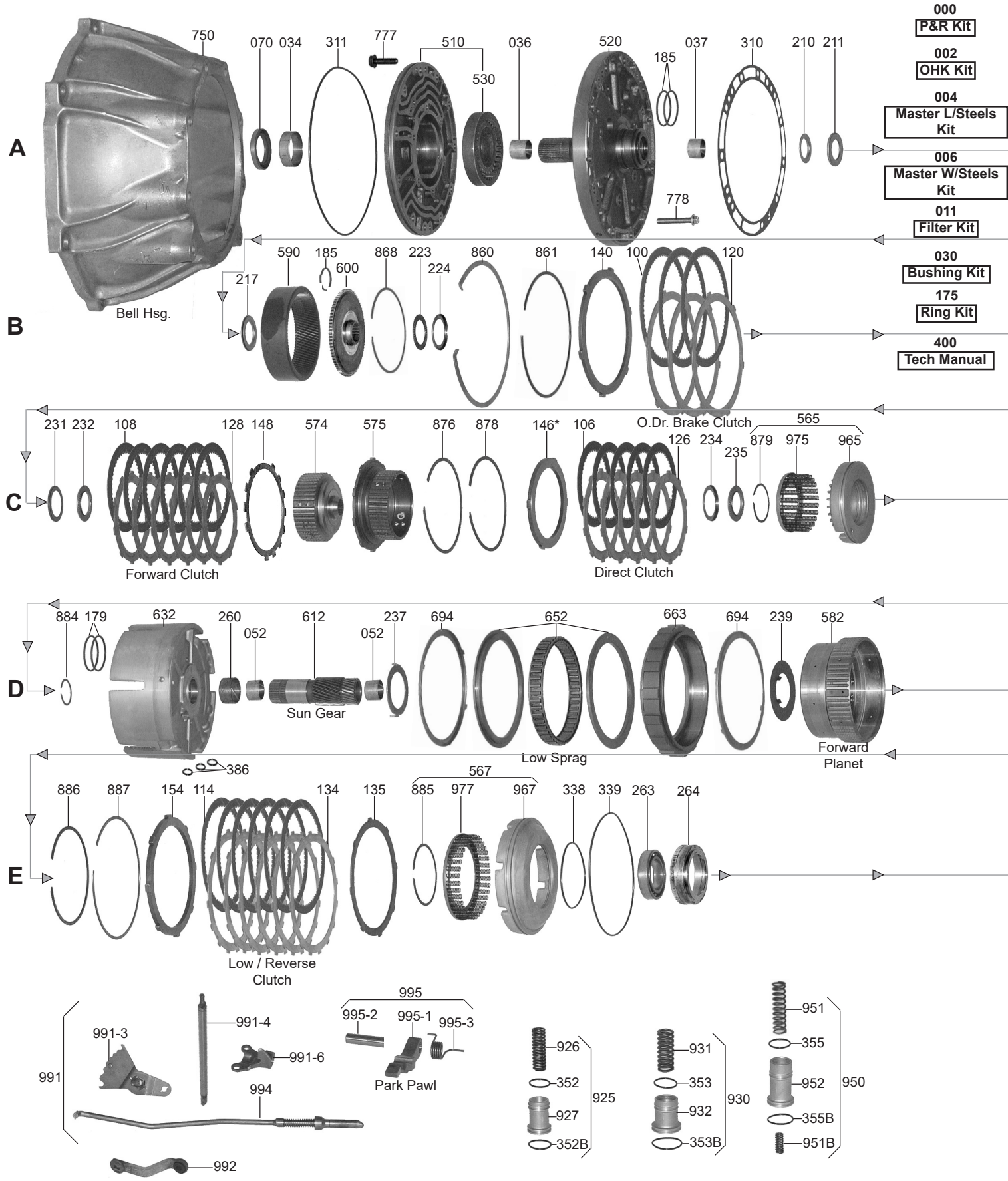

TOYOTA

© Whatever It Takes Transmission Parts. Inc.

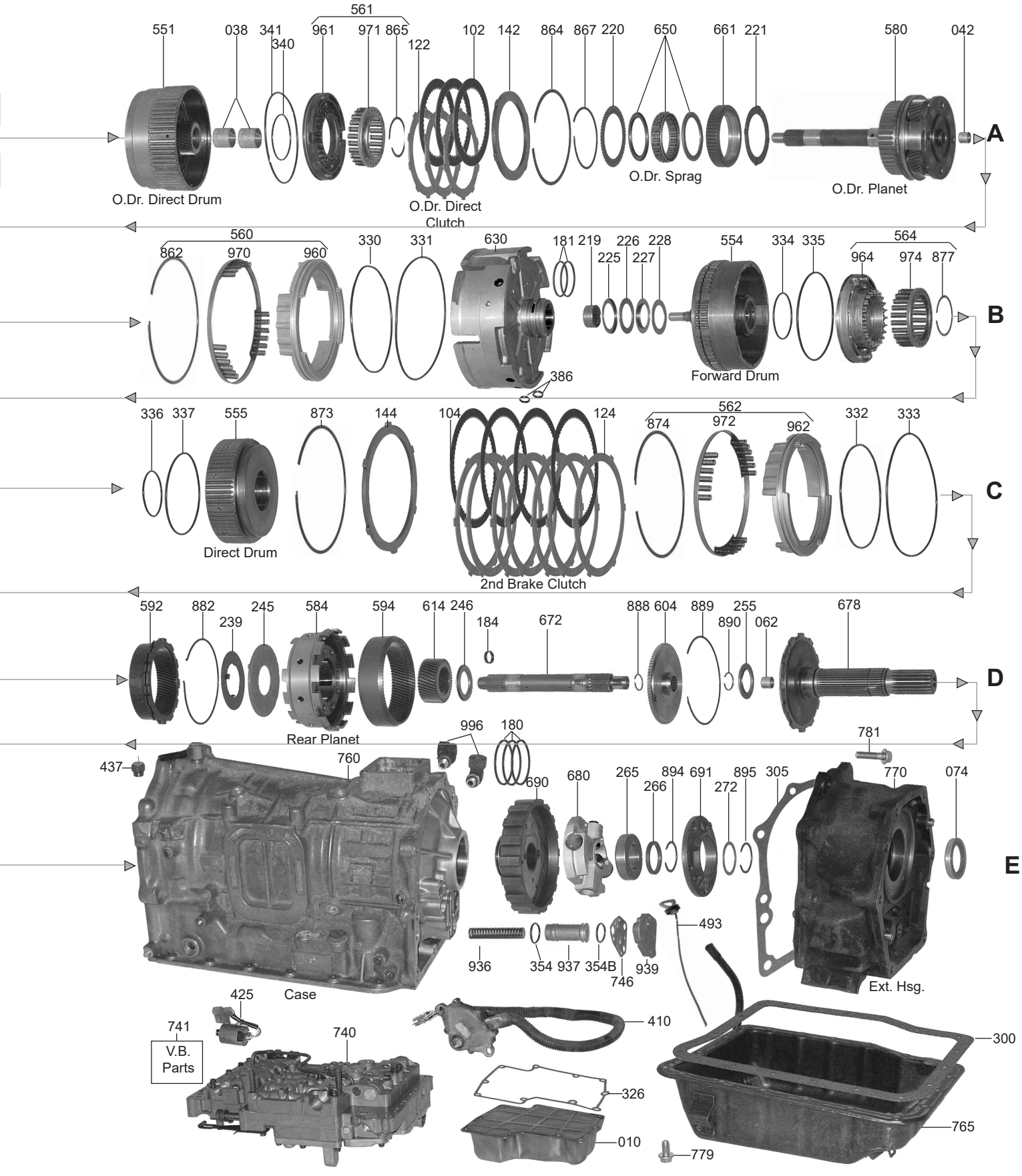

TOYOTA

© Whatever It Takes Transmission Parts. Inc.

PART #	PAPER & RUBBER KIT	QTY.	REFERENCE #
141000	Paper & Rubber Kit, A440F Without Transfer Parts 1985-92	1	
141000A	Paper & Rubber Kit, A440F With Transfer Parts 1985-92	1	
141000AB	Paper & Rubber Kit, A442F With Transfer Parts 1993-95	1	

PART #	OVERHAUL KITS	QTY.	REFERENCE #
141002	Overhaul Kit, A440F W/Out Transfer Case Parts 1985-92	1	
141002A	Overhaul Kit, A440F With Transfer Case Parts 1985-92	1	
141002AB	Overhaul Kit, A442F With Transfer Case Parts 1993-95	1	

PART #	MASTER L/STEEL KIT	QTY.	REFERENCE #
141004	Master L/Steels Kit, A440F W/Out Transfer Case Parts 1985-92	1	
141004A	Master L/Steels Kir, A440F With Transfer Case Parts 1985-92	1	
141004AB	Master L/Steels Kit, A442F With Transfer Case Parts 1993-95	1	

PART #	MASTER W/STEEL KIT	QTY.	REFERENCE #
141006	Master W/Steels Kit, A440F W/Out Transfer Case Parts 1985-92	1	
141006A	Master W/Steels Kit, A440F With Transfer Case Parts 1985-92	1	
141006AB	Master W/Steels Kit, A442F With Transfer Case Parts 1993-95	1	

PART #	FILTER	QTY.	REFERENCE #
141010	Filter, A440F (5/8” Thick) 1985-95	1	
141010A	Filter, A440F (2” Thick) 1985-95	1	
141010B	Filter, A442F 1993-95	1	

PART #	FILTER KIT	QTY.	REFERENCE #
141011	Filter Kit, A440F (5/8” Thick) 1985-92	1	
141011A	Filter Kit, A440F (2” Thick) 1985-92	1	
141011B	Filter Kit, A442F 1993-95	1	

PART #	BUSHINGS	QTY.	REFERENCE #
141030	Bushing Kit, A440 (8 Bushings) 1985-95	1	
141034	Bushing, A440/S450-43LR Pump Body	1	
141034A	Bushing, A440F/A442F Pump Body 1985-95	1	
141044A	Caged Bearing, A440F/A442F 2nd Brake Support To Sun Gear 1985-95 (Use 141260A)	1	

PART #	METAL CLAD SEALS	QTY.	REFERENCE #
141070	Seal, A440F/A442F Front Pump 1985-95	1	90311-42010
60072	Seal, A440F/A442F Manual Lever Shaft 1985-95	2	
141074	Seal, A440F/A442F Extension Housing 1985-95	1	
141078	Seal, A440F/A442F Speedometer Gear Shaft 1985-95	1	

PART #	FRICTION CLUTCH	QTY.	REFERENCE #
141100A	Friction, A440F Overdrive Brake Clutch (.083”) (70 Teeth) 1985-92 (Also Fits A440F/A442F 2nd Brake Clutch 1985-95)	3-8	35633-36060
141100AA	Friction, A442F Overdrive Brake Clutch (.083”) (75 Teeth) 1993-95	3	35633-36050
141102A	Friction, A440F/A442F Overdrive Direct Clutch (.083”) (46 Teeth) 1985-95 (Also Fits A440F/A442F Forward & Direct Clutch 1985-95)	14-15	35633-60040
141104A	Friction, A440F/A442F 2nd Brake Clutch (.083”) (70 Teeth) 1985-95 (Use 141100A)	4-5	35633-36060
141106A	Friction, A440F/A442F Direct Clutch (.083”) (46 Teeth) 1985-95 (Use 141102A)	5	35633-60040
141108A	Friction, A440F/A442F Forward Clutch (.083”) (46 Teeth) 1985-95 (Use 141102A)	6-7	35633-60040
141114A	Friction, A440F/A442F Low / Reverse Clutch (.067”) (70 Teeth) 1985-95	6	35633-60030

PART #	STEEL CLUTCH	QTY.	REFERENCE #
141120A	Steel, A440F Overdrive Brake Clutch (.094”) (6 Teeth) (6.00”ID)1985-92 (Also Fits A440F 2nd Brake Clutch 1985-90)	3-10	35632-60010
141120AA	Steel, A442F Overdrive Brake Clutch (.078”) (6 Teeth) 1993-95 (Also Fits A440F/A442F 2nd Brake Clutch 1991-95)	3-10	35632-60040
141120AB	Steel, A442F Overdrive Brake Clutch (.157”) (6 Teeth) 1993-95	3-10	35632-60020
141120B	Steel, A440F Overdrive Brake Clutch (.094”) (6 Teeth) (6.400”ID) 1985-Up	3-10	

© Whatever It Takes Transmission Parts. Inc.

141122A	Steel, A440F/A442F Overdrive Direct Clutch (.071") (10 Teeth) 1985-95 (Also Fits A440F/A442F Forward & Direct Clutch 1985-95)	6-18	35634-36010
141122AA	Steel, A440F/A442F Overdrive Direct Clutch (.078") (10 Teeth) 1985-95 (Also Fits A440F/A442F Forward Clutch 1985-95)	AR	35634-36040
141122AB	Steel, A440F/A442F Overdrive Direct Clutch (.087") (10 Teeth) 1985-95 (Also Fits A440F/A442F Forward Clutch 1985-95)	AR	35634-36050
141122AC	Steel, A440F/A442F Overdrive Direct Clutch (.095") (10 Teeth) 1985-95 (Also Fits A440F/A442F Forward Clutch 1985-95)	AR	35634-36020
141124A	Steel, A440F 2ND Brake Clutch (.094") (6 Teeth) 1985-90 (Use 141120A)	7	35632-60010
141124AA	Steel, A440F/A442F 2ND Brake Clutch (.078") (6 Teeth) 1991-95 (Use 141120AA)	7	35632-60040
141126A	Steel, A440F/A442F Direct Clutch (.071") (10 Teeth) 1985-95 (Use 141122A)	6	35634-36010
141128A	Steel, A440F/A442F Forward Clutch (.071") (10 Teeth) 1985-95 (Use 141122A)	6	35634-36010
141128AA	Steel, A440F/A442F Forward Clutch (.078") (10 Teeth) 1985-95 (Use 141122AA)	AR	35634-36040
141128AB	Steel, A440F/A442F Forward Clutch (.087") (10 Teeth) 1985-95 (Use 141122AB)	AR	35634-36050
141128AC	Steel, A440F/A442F Forward Clutch (.095") (10 Teeth) 1985-95 (Use 141122AC)	AR	35634-36020
141134A	Steel, A440F Low / Reverse Clutch (.071") (16 Teeth) 1985-92	6	35632-36020
141134AA	Steel, A442F Low / Reverse Clutch (.095") (16 Teeth) 1993-95	6	35632-36030
141134B	Steel, A442F Low / Reverse Clutch (.110") (16 Teeth) 1993-95	6	
141135A	Cushion Steel, A440F/A442F Low / Reverse Clutch (.100") (8 Teeth) 1985-95	1	

PART #	CLUTCH PRESSURE PLATES	QTY.	REFERENCE #
141140A	Pressure Plate, A440F/A442F Overdrive Brake Clutch (Top) (.195") (6 Teeth) 1985-95	1	35676-60010
141142A	Pressure Plate, A440F/A442F Overdrive Direct Clutch (Top) (4 Teeth) 1985-95	1	
141144A	Pressure Plate, A440F/A442F 2nd Brake Clutch (Top) (.198") (6 Teeth) 1985-95	1	
141146A	Pressure Plate, A440F/A442F Direct Clutch (Top) (.211") (4 Teeth) (Cast # 2) 1985-95	1	35675-60010
141148A	Wavy Steel, A440F/A442F Forward Clutch (.078") (10 Teeth) 1985-95	1	35634-36010
141154A	Pressure Plate, A440F/A442F Low / Reverse Clutch (Top) (.260") (8 Teeth) 1985-95	1	
141154B	Pressure Plate, A440F/A442F Low / Reverse Clutch (Top) (.276") (8 Teeth) 1985-95	1	

PART #	OIL SEALING RINGS	QTY.	REFERENCE #
141175	Ring Kit, A440F/A442F 1985-95	1	

PART #	WASHERS & BEARINGS	QTY.	REFERENCE #
141210A	Race, A440 Stator To Drum (1.685"OD)(.025" Thick)	1	35789-36050
141210AA	Race, A440 Stator To Drum (1.685"OD)(.034" Thick)	1	
141210AB	Race, A440 Stator To Drum (1.685"OD)(.049" Thick)	1	
141211A	Bearing W/Race, A440F Stator To Drum (1.885"OD)	1	90374-32005
141217B	Bearing W/Race, A440F Overdrive Planet To Hub (1.642"OD)	1	34738-36010
141220A	Washer, A440F Overdrive Sprag (57 Teeth) (.056")	1	
141219A	Caged Needle Bearing, A440F Overdrive Support To Forward Drum Shaft (1.300"OD)	1	
141225A	Cup Race, A440F Support To Forward Drum (2.045"OD) (Also Fits Forward Clutch Hub Front & Rear)	1-3	35789-36020
141226A	Bearing, A440F Support To Forward Drum (2.039"OD) (.077" Thick)	1	90374-34001
141227A	Race, A440F Support To Forward Drum (Top Hat) (1.970"OD)	1	
141228A	Shim, A440F Support To Forward Drum (.039")	1	
141228AA	Shim, A440F Support To Forward Drum (.049")	1	
141228AB	Shim, A440F Support To Forward Drum (.059")	1	
141228AC	Shim, A440F Support To Forward Drum (.069")	1	
141231A	Cup Race, A440F Forward Drum To Forward Hub (Use 141225A)	1	
141232A	Bearing & Race, A440F Forward Drum To Hub (2.038"OD) (.110" Thick) (Also Fits Forward Hub To Direct Drum	1-2	90374-32005
141234A	Bearing & Race, A440F Forward Hub To Direct Drum (Use 141232A)	1	
141235A	Cup Race, A440F Forward Hub To Direct Drum (Use 141225A)	1	
141237A	Washer, A440F Front Planet-Front (.070" Thick) 2 Tab	1	
141239A	Shim, A440F 2nd Brake Support To Front Planet (4 Inner Tabs-Steel)	1	35737-60011
141245A	Washer, A440F Front To Rear Planet Plastic (4.050"OD) (4 Tab)	1	35738-60020
141246A	Bearing & Race, A440F Rear Sungear To Hub (2.084"OD) (.108" Thick)	1	
141260A	Caged Bearing, A440F 2nd Brake Support To Sun Gear (1.300"OD) (.585" Thick)	1	
141263A	Ball Bearing, A440F Case To Output Shaft (2.950"OD) (1.770"ID)	1	
141264A	Race, A440F Presses In Case (3.165"OD) (.878" Thick)	1	
141265A	Ball Bearing, A440F Extension Housing (1.574"ID)	1	
141266A	Spacer, A440F Output Shaft (.204" Thick) (1.967"OD) (1.581"ID)	1	
141272A	Shim, A440F Output Shaft (.063")	1	

© Whatever It Takes Transmission Parts. Inc.

PART #	GASKETS & RUBBER COMPONENTS	QTY.	REFERENCE #
141300A	Pan Gasket, A440F/A442F Bottom 1985-95	1	35168-36010
141305A	Gasket, A440F 1985-92 / A442F 1993-95 Transmission Case Adapter	1	
141310A	Gasket, A440/AW450-43LE Pump To Overdrive Housing 1985-Up (Also Fits Overdrive Housing To Case)	1	
141311A	Gasket, A440 Pump To Case 1985-Up	2	
141326	Gasket, A440F Filter 1985-92	1	35339-60020

PART #	TECHNICAL MANUALS	QTY.	REFERENCE #
141400	Technical Manual, A440F/A442F 1985-95	1	

PART #	ELECTRICAL COMPONENTS	QTY.	REFERENCE #
141410A	Switch, A440F External (2 Bolt) 10 Wire (28 1/2” Wire Harness)	1	
141437A	Sensor, A440F Screw In (Brass) 18” Harness (1 Wire Type) (By The Cooler Fittings)	1	
141446A	Wire Harness, A440F Internal/External (1 Connector, 2 Wire)	1	

PART #	HARD PARTS	QTY.	REFERENCE #
141500A	Pump, A440F (With 28 Teeth Inner Gear)	1	
141500B	Pump, A440F (With 11 Teeth Inner Gear) (.470” Thick)	1	
141500BA	Pump, A440F (With 11 Teeth Inner Gear) (.720” Thick)	1	
141510A	Pump Body, A440F (With 28 Teeth Inner Gear)	1	35035-36010
141510B	Pump Body, A440F (With 11 Teeth Inner Gear) (.470” Thick)	1	35035-60010
141510BA	Pump Body, A440F (With 11 Teeth Inner Gear) (.720” Thick)	1	
141520A	Stator, A440F (Used With 28 Teeth Inner Pump Gear) (2.005” Diameter Ring Tower)	1	35308-36010
141520B	Stator, A440F (Used With 11 Teeth Inner Pump Gear) (2.005” Diameter Ring Tower)	1	35308-60020
141551	Drum, A440F Overdrive Direct (10 Teeth Steels) Cast Iron (35 Teeth Sun Gear)	1	
141554	Drum, A440F Forward W/Out PTO Gear (.930” Diameter Splines)	1	35701-60010
141555A	Drum, A440F Direct Clutch (10 Teeth Steels) (1 1/2” Long Outer Splines)	1	35651-36010
141560A	Piston Kit, A440F Overdrive Brake Clutch (1.480” Thick Piston)	1	
141561A	Piston Kit, A440F Overdrive Direct Clutch (24 Springs) (2.160” ID Piston)	1	
141562A	Piston Kit, A440F 2nd Brake Clutch (1.480” Thick) (5.735” ID Piston)	1	
141564A	Piston Kit, A440F Forward Clutch (22 Spring Pockets) (4.985” OD Piston)	1	
141565A	Piston Kit, A440F Direct Clutch (.790” Thick) (24 Splines) (4.672”OD Piston)	1	
141567A	Piston Kit, A440F Low / Reverse (1 1/2” Thick x 6 7/8”OD Piston)	1	
141574A	Hub, A440F Forward Clutch (20 Inner Splines) (2.140” Tall)	1	35631-36010
141575A	Pressure Plate & Hub, A440F Forward Clutch (Top) (10 Teeth) (42 Splines)	1	35654-36011
141580	Planet, A440F Overdrive (35 Teeth Sun Gear) (46 Teeth Friction Splines)	1	34710-36010
141582	Planet, A440F Forward (Left Angled Cut Gears) (8 Holes In Sprag Race)	1	35720-60010
141584	Planet, A440F Rear (Angled Cut Gears) (2.351” Thick)	1	35760-60010
141590A	Ring Gear, A440F Overdrive Planet (89 Teeth) (Right Angle) (1.538” Wide)	1	34731-36010
141592A	Ring Gear, A440F Forward Planet (3.205” Thick) (Right Angled Teeth)	1	35743-60010
141594A	Ring Gear, A440F Rear Planet (1.420” Thick) (Angled Teeth)	1	
141600A	Hub, A440F Overdrive Planet (89 Teeth) (20 Spline)	1	
141604A	Hub, A440F Rear (20 Splines) (82 Angled Teeth On OD)	1	35761-60010
141612A	Sun Gear, A440F Forward (28 Angled Teeth) (5.084” Long)	1	35706-60011
141614A	Sun Gear, A440F Rear (44 Angled Teeth No Groove) (1.043” Thick)	1	
141630	Support, A440F Overdrive Brake (4 3/16” Tall) (Aluminum)	1	34101-60010
141632	Support, A440F 2nd Brake (3 7/16” Tall) (Aluminum)	1	35709-36010

PART #	SPRAGS & ONE WAY CLUTCHES	QTY.	REFERENCE #
141650A	Sprag, A440F Overdrive (22 Elements) (.610” Wide)	1	35791-36010
141652	Sprag, A440 Low (46 Elements) (6 3/16”OD) (.808” Wide)(With Brass End Caps)	1	35790-36010
141652K	Sprag Assembly, A440 Low (46 Elements)(6 3/16”OD)(.808” Wide Sprag)(With 16 Lug Outer Race #663)(With Brass End Caps)	1	

PART #	HARD PARTS (Continued)	QTY.	REFERENCE #
141661B	Outer Race, A440F Overdrive Sprag (57 Teeth) (2.810”ID)	1	34713-36010
141663A	Outer Race, A440 Sprag (16 Lugs) (1.145” Thick) (6 1/8”OD)	1	
141672A	Input Shaft, A440F (8 1/8” Long)	1	35713-36011
141678A	Output Shaft, A440F 4WD (7 1/2” Long)	1	35073-60010
141680A	Governor, A440F (8 Bolt) (Aluminum)	1	
141690A	Park Gear, A440F (18 Lugs) (3 Ring Grooves) (8 Bolt Governor)	1	
141691A	Retainer, A440F (5 Bolt) 4.805”OD (2.435”ID)	1	
141694A	Retainer, A440F Sprag (6 Tabs) (6 5/8”OD)	1	

© Whatever It Takes Transmission Parts. Inc.

141740	Valve Body, A440F (1 Switch)	1	

PART #	VALVE BODY COMPONENTS	QTY.	REFERENCE #
141746A	Plate, A440F Accumulator (10 Holes)	1	

PART #	HARD PARTS (Continued)	QTY.	REFERENCE #
141750	Bell Housing, A440F Closed Stator At 9:30 (No Case Dowel Pins)	1	
141760	Case, A440F (NO PTO) Top Mount (Has Governor Bore)	1	
141765	Pan, A440F (20 Bolts) Front Passenger Side Filler Tube	1	
141770	Extention Housing, A440 4x4 (4.625” Long) 6 Bolts To Transfer Case (Cast Iron)	1	
141770A	Extention Housing, A440 4x4 (4.180” Long) 6 Bolts To Transfer Case (Cast Iron)	1	
141779AK	Bolt Set, A440F Pan (20 Pieces) (10mm)	1	
141783AK	Bolt Set, A440F 2nd Brake Support To Case (14mm) (1.085” Long) (3 Pieces)	1	
141860A	Snap Ring, A440F Overdrive Brake Support To Case (8 9/16”OD) (.105”)	1	
141861A	Snap Ring, A440F Top Overdrive Brake Clutch (7 3/8”OD) (.078”) (Also Fits Overdrive Brake Spring Retainer)	1-2	90521-99109
141862A	Snap Ring, A440F Holds Overdrive Brake Spring Retainer In (Use 414861A)	1	
141864A	Snap Ring, A440F Overdrive Direct Clutch Top (.068”) (5 3/8”OD)	1	
141865A	Snap Ring, A440F Overdrive Direct Piston Retainer (.039”) (2.315”OD) (Use 141877A)	1	
141868A	Snap Ring, A440F Overdrive Hub To Ring Gear (4.882”OD)	1	
141876A	Snap Ring, A440F Forward Clutch Top (.068”) (5 1/2”OD) (Also Fits Direct Clutch Top)	1-2	90521-99017
141877A	Snap Ring, A440F Forward Piston Retainer (.039”) (2.315”OD) (Also Fits Overdrive Direct Piston Retainer & Direct Piston Retainer)	1-3	90520-50001
141878A	Snap Ring, A440F Direct Clutch Top (.068”) (5 1/2”OD) (Use 141876A)	1	
141879A	Snap Ring, A440F Direct Piston Retainer (.039”) (2.315”OD) (Use 141877A)	1	
141882A	Snap Ring, A440F Front Ring Gear (5”OD) (.070”) Bent Ends	1	90521-99040
141884A	Snap Ring, A440F 2nd Brake Support To Front Sun Gear (.057”) (1.545”OD)	1	
141885A	Snap Ring, A440F Low / Reverse Spring Retainer (.058”) (3.741”OD)	1	
141886A	Snap Ring, A440F Output Shaft To Planet (5 7/8”OD) (.067”)	1	
141888A	Snap Ring, A440F Input Shaft To Rear Ring Gear Hub (1.078”OD) (.059”)	1	
141889A	Snap Ring, A440F Rear Hub To Ring Gear (5 1/8”OD) (.057”)	1	
141894A	Snap Ring, A440F Bearing To Extension Housing (1.685”OD) (.059”) (Also Fits Retainer # 691To Extension Housing)	1-2	
141895A	Snap Ring, A440F Retainer # 691 To Extension Housing (Use 141894A)	1	
141925A	Accumulator Assembly, A440F B-O Accumulator	1	
141930A	Accumulator Assembly, A440F C-2 Accumulator	1	
141936A	Spring, A440F C-1 Accumulator (3.535” Long)	1	
141937A	Piston, A440F C-1 Accumulator (2.495” Long)	1	
141939A	Cover, A440F C-1 Accumulator (4 Bolt) (Aluminum)	1	
141950A	Accumulator Assembly, A440F B-2 Accumulator	1	
141960A	Piston, A440F Overdrive Brake (1.480” Thick)	1	35621-36010
141961A	Piston, A440F Overdrive Direct clutch (24 Springs) (2.160”ID)	1	
141962A	Piston, A440F 2nd Brake (1.480” Thick) (5.735”ID)	1	
141964A	Piston, A440F Forward Clutch (22 Spring Pockets) (4.985”OD)	1	35602-36010
141965A	Piston, A440F Direct Clutch (.790” Thick) 22 Splines (4.672”OD)	1	35606-36010
141967A	Piston, A440F Low / Reverse (1 1/2” Thick) (6 7/8”OD)	1	
141970A	Spring Retainer, A440F Overdrive Clutch (6 15/16”OD) (Also Fits 2nd Brake Clutch)	1-2	
141971A	Retainer, A440F Overdrive Direct Clutch (24 Springs) (3.380”OD)	1	
141972A	Spring Retainer. A440F 2nd Brake Clutch (Use 141970A)	1	
141974A	Retainer, A440F Forward Clutch (22 Spring) (3.332”OD) (Also Fits Direct Clutch Retainer)	1-2	
141975A	Retainer, A440F Direct Clutch (Use 141974A)	1	
141977A	Spring & Retainer, A440F Low / Reverse (36 Springs, 5”OD) (3 5/8”OD)	1	
141991A	Linkage Assembly, A440F Internal	1	
141994A	Park Rod, A440F (.315”OD) (17” Long)	1	
141995A	Park Pawl Assembly, A440F (3 Pieces)	1	
141996AK	Fitting Set, A440F Cooler Line (Elbow Type)	1	

© Whatever It Takes Transmission Parts. Inc.

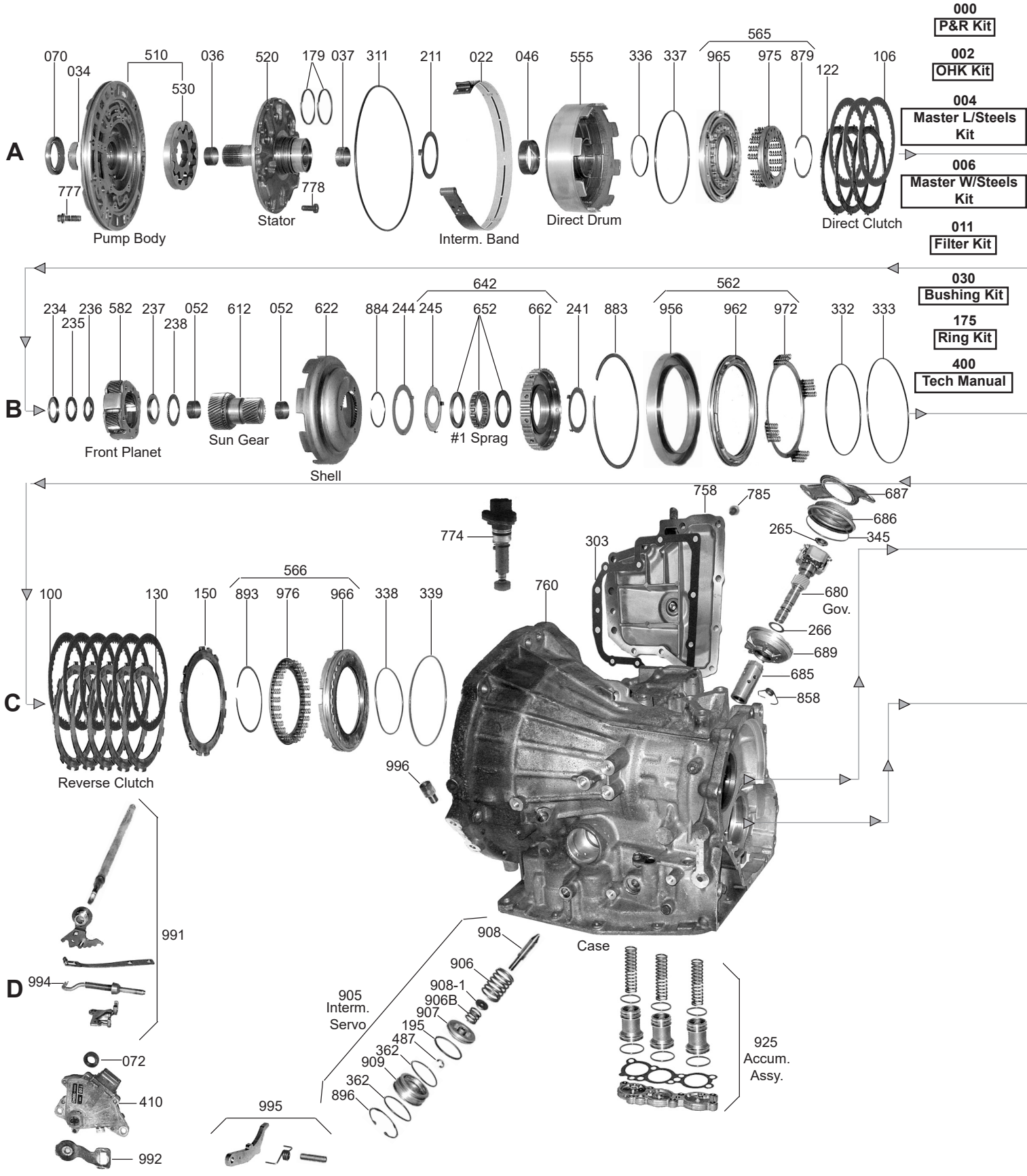

000 P&R Kit

002 OHK Kit

004 Master L/Steels Kit

006 Master W/Steels Kit

011 Filter Kit

030 Bushing Kit

175 Ring Kit

400 Tech Manual

TOYOTA

© Whatever It Takes Transmission Parts. Inc.

A130 / A131 / A132

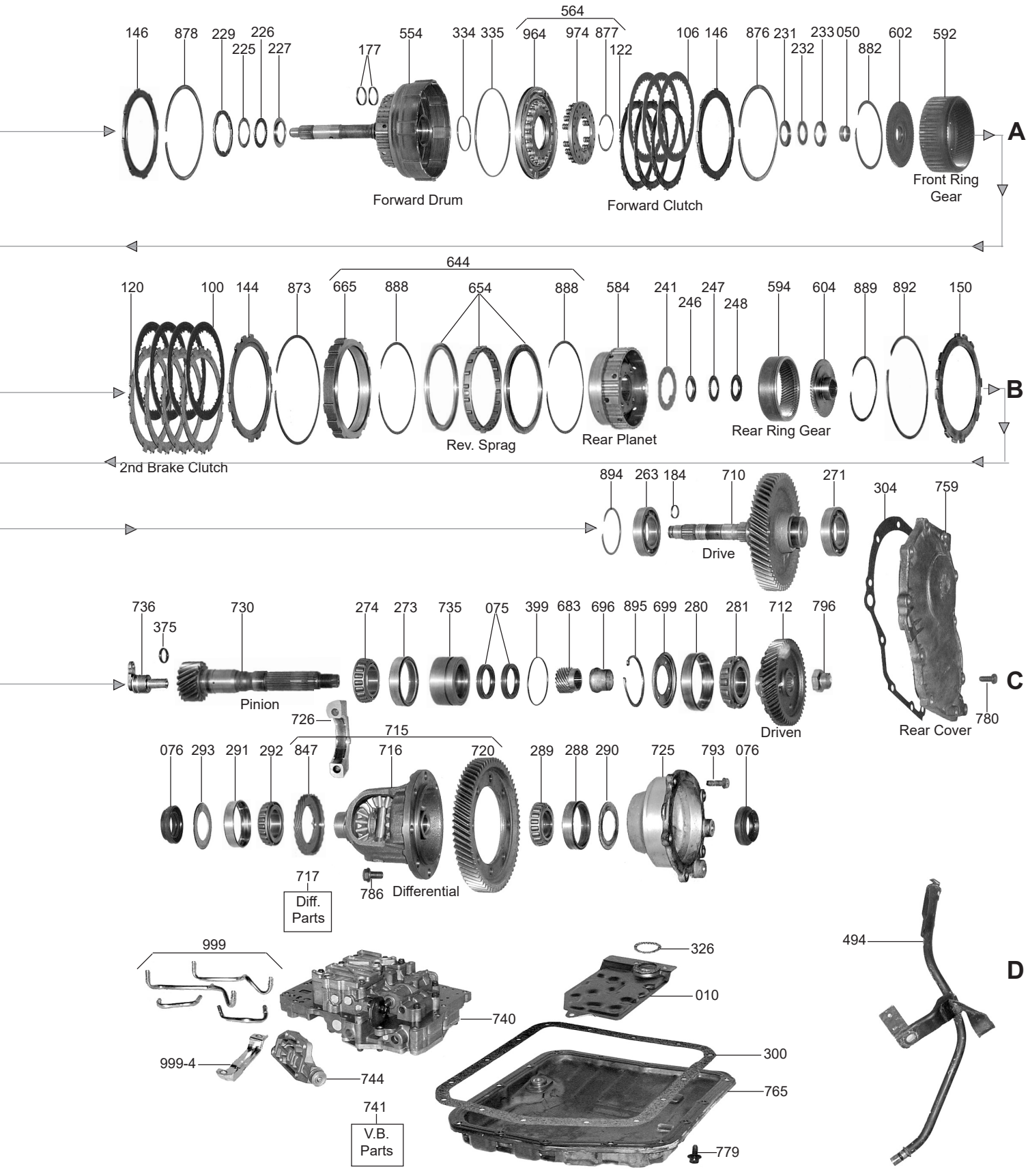

TOYOTA

1-800-940-0197

© Whatever It Takes Transmission Parts. Inc.

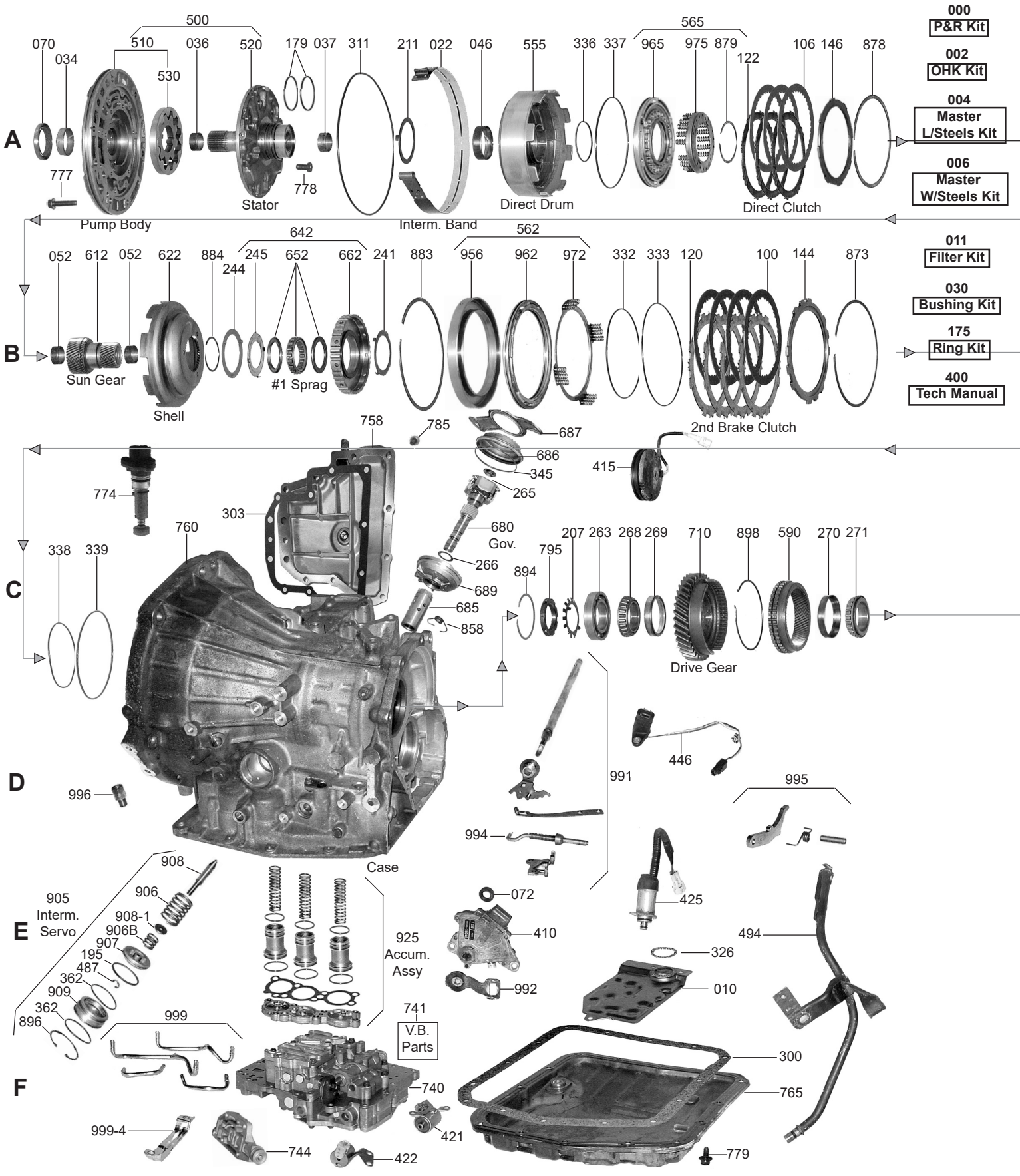

TOYOTA

© Whatever It Takes Transmission Parts. Inc.

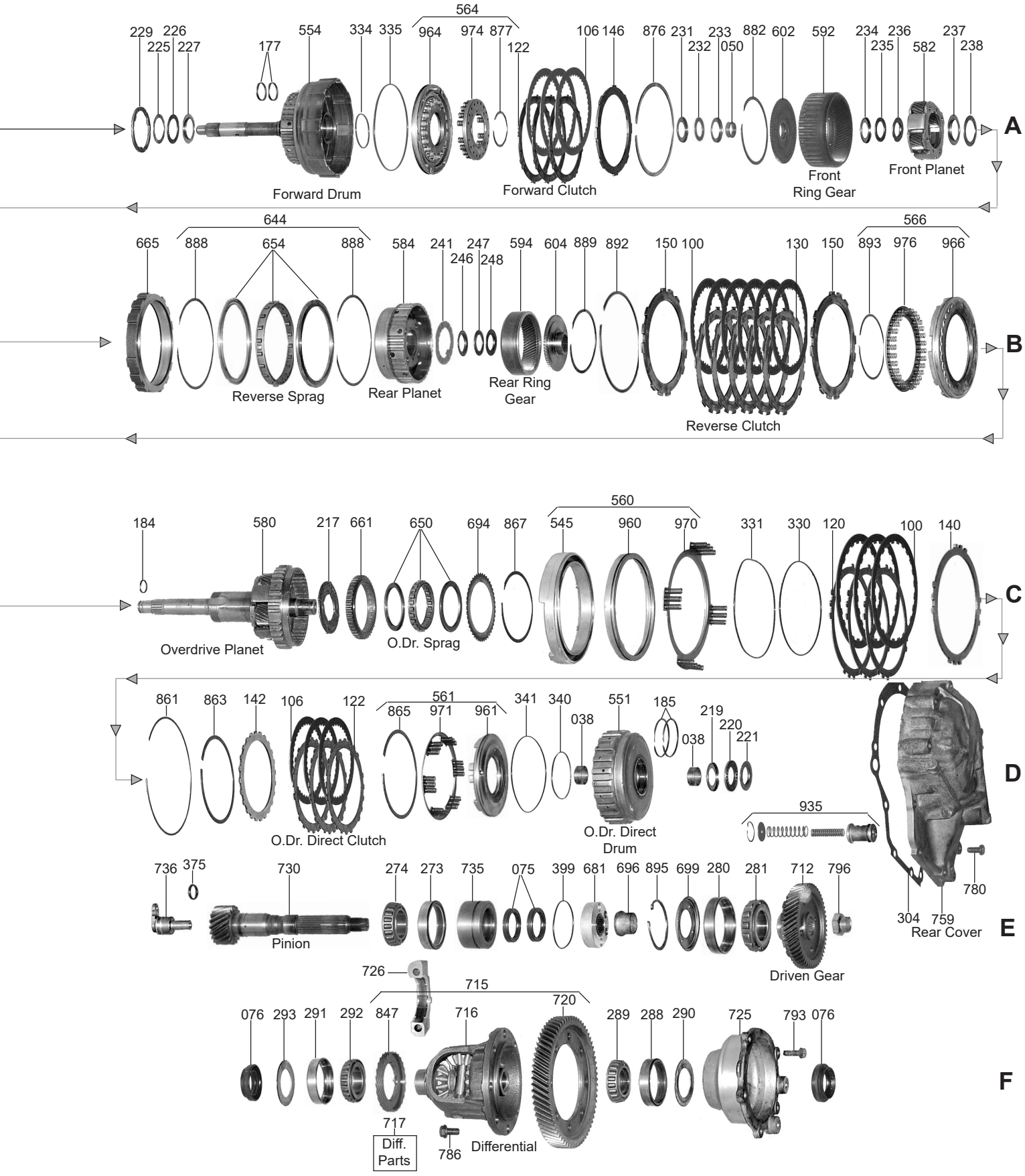

TOYOTA

© Whatever It Takes Transmission Parts. Inc.

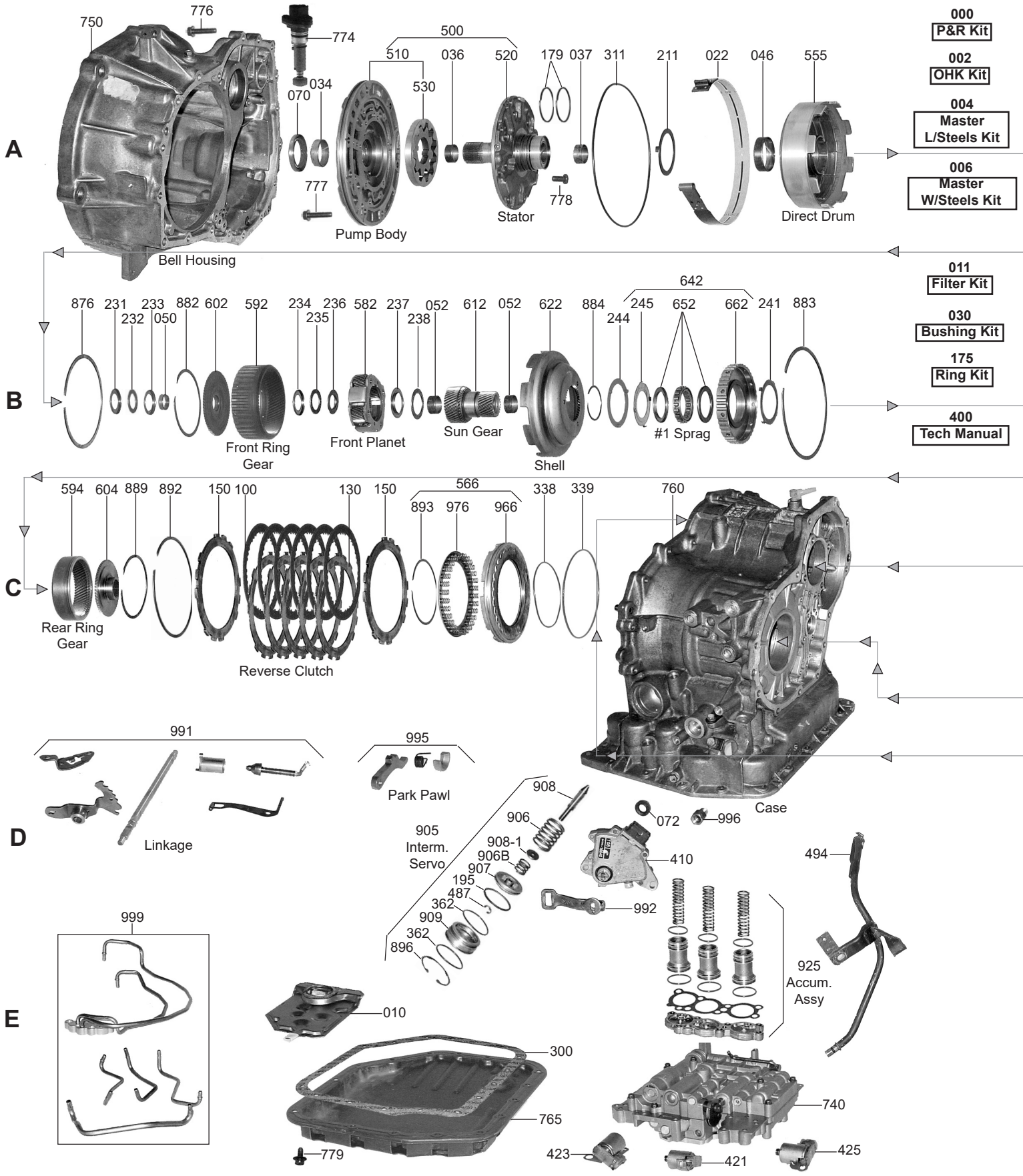

© Whatever It Takes Transmission Parts. Inc.

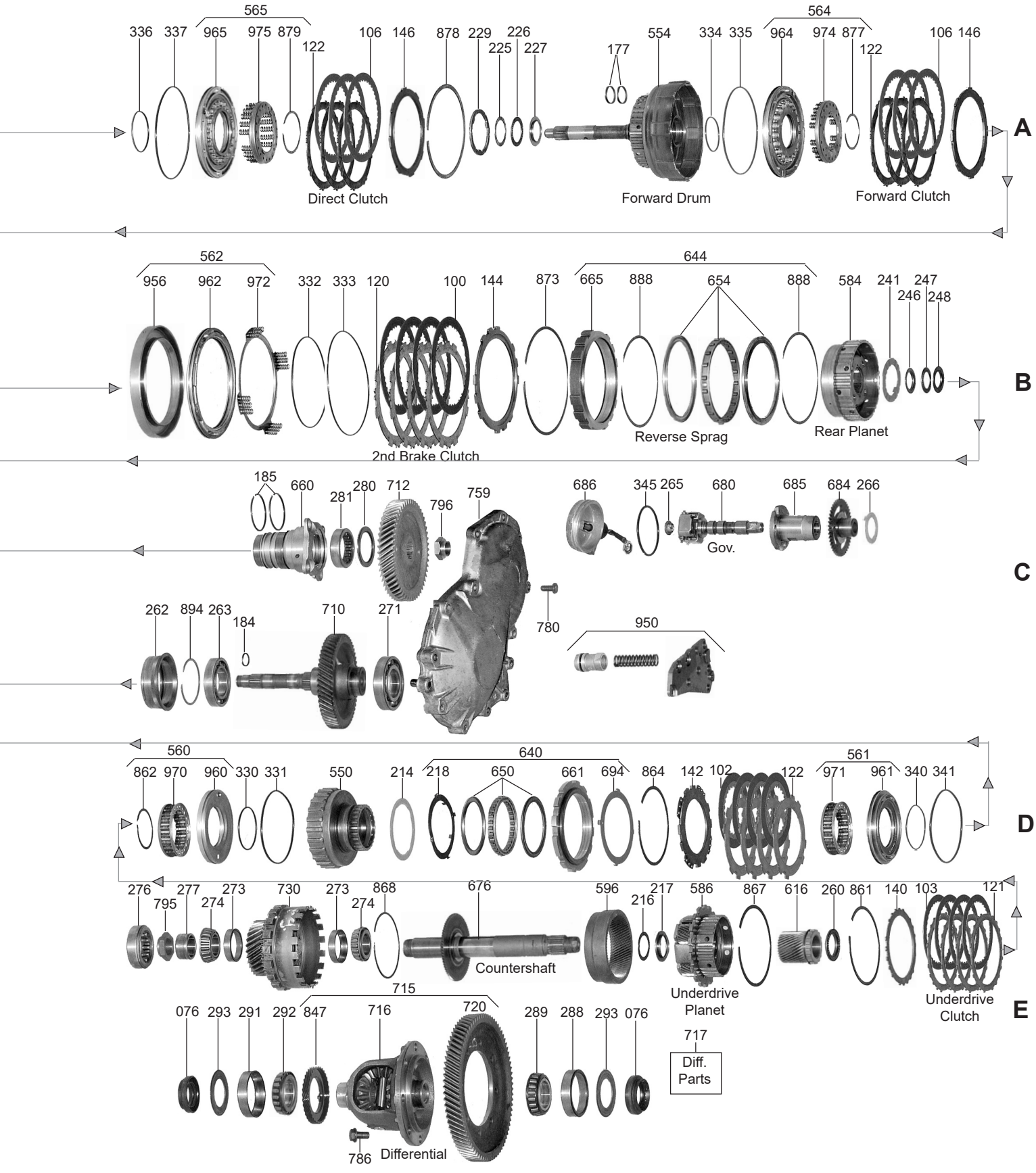

TOYOTA

1-800-940-0197

© Whatever It Takes Transmission Parts. Inc.

PART #	PAPER & RUBBER KIT	QTY.	REFERENCE #
67000B	Paper & Rubber Kit, A130/A131/A132 1984-Up	1	
67000C	Paper & Rubber Kit, A140/A141/A143 1983-Up	1	
67000D	Paper & Rubber Kit, A240/A241/A242L/A243L/A244E 1985-Up	1	
67000DA	Paper & Rubber Kit, A245E/A246E/A247E 1992-Up	1	

PART #	OVERHAUL KITS	QTY.	REFERENCE #
67002B	Overhaul Kit, A130/A131/A132 1984-96	1	
67002C	Overhaul Kit, A140/A141/A143 1983-Up	1	
67002D	Overhaul Kit, A240/A241/A242L/A243L/A244E 1985-Up	1	
67002DA	Overhaul Kit, A245E/A246E/A247E 1992-02	1	
67002DBF	Overhaul KIt, A245E/A246E/A247E 2003-Up	1	

PART #	MASTER L/STEEL KIT	QTY.	REFERENCE #
67004B	Master L/Steels Kit, A130/A131/A132 1984-Up	1	
67004C	Master L/Steels Kit, A140E/A141E (MR2) 1983-E1986	1	
67004CA	Master L/Steels Kit, A140E/A140L/A141L (Camry L1986-8/1991, Celica L1986-8/1993)	1	
67004CB	Master L/Steels Kit, A140E/A140L/A143 (Camry 8/1991-Up, Celica 9/1993-Up)	1	
67004D	Master L/Steels Kit, A240/A241/A242L/A243L/A244E (Corolla 8/1984-5/1992, Celica 9/1985-1993, MR2 6/1986-1993)	1	
67004DA	Master L/Steels Kit, A245E/A246E/A247E 6/1992-02	1	
67004DBF	Master L/Steels Kit, A245E/A246E/A247E 2003-Up	1	

PART #	MASTER W/STEEL KIT	QTY.	REFERENCE #
67006B	Master W/Steels Kit, A130/A131/A132 1984-Up	1	
67006C	Master W/Steels Kit, A140E/A141E (MR2) 1983-E1986	1	
67006CA	Master W/Steels Kit, A140E/A140L/A141E (Camry L1986-8/1991) (Celica L1986-8/1993)	1	
67006CB	Master W/Steels Kit, A140E/A140L/A143 (Camry 8/1991-Up) (Celica 9/1993-Up)	1	
67006D	Master W/Steels Kit, A240/A241/A242L/A243L/A244E (Corolla 8/1984-5/1992, Celica 9/1989-1993, MR2 6/1986-1993)	1	
67006DA	Master W/Steels Kit, A245E/A246E/A247E 1992-02	1	
67006DBF	Master W/Steels Kit, A245E/A246E/A247E 2003-Up	1	

PART #	FILTER	QTY.	REFERENCE #
67010B	Filter, A130/A140 (With Square Pick-Up) (2"x2 1/4") 1983-97	1	35330-32022
67010BA	Filter, A130/A140 (With Rectangle Pick-Up Opening 1/2" x 2 1/4") 1983-Up	1	61576
67010D	Filter, A240/A241/A243 2WD 1985-Up	1	
67010DA	Filter, A245E/A246E 1993-2	1	
6710DB	Filter,A241H AWD 198-Up (MR2, Paeo, RAV, Terce AWD)	1	3533-12020
67010DC	Filter, A25E / A246E 2003-Up	1	
87010	Filter, A140 AWD (Outlet Hole On Vlave Body Side Is 1.015"ID x 1.165"ID)	1	

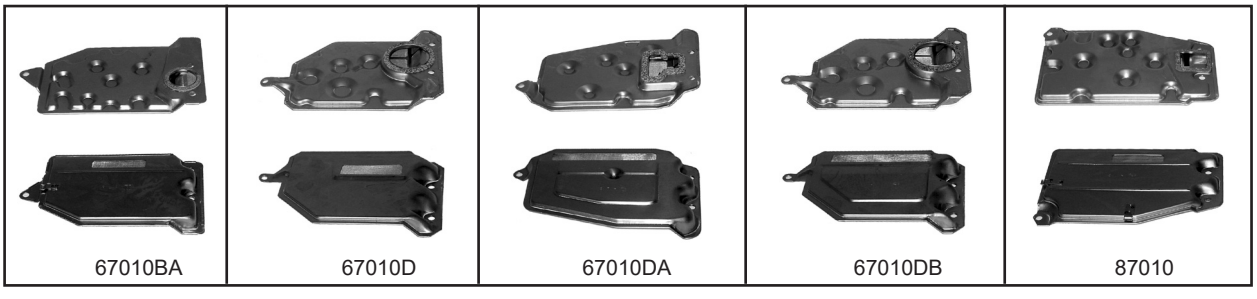

67010BA | 67010D | 67010DA | 67010DB | 87010

PART #	FILTER KIT	QTY.	REFERENCE #
67011B	Filter Kit, A130/A140 (1.5L, 1.6L, 2.2L Engine) With Square Pick-Up (2" x 2 1/4") 1983-97	1	
67011BA	Filter Kit, A130/A140 (1.6L, 1.8L, 2.0L & 2.2L Engine) With Rectangle Pick-Up (1/2" x 2 1/4") 1989	1	
67011C	Filter Kit, A140 4x4	1	
67011D	Filter Kit, A240/A241/A243 2WD 1985-Up	1	
67011DA	Filter Kit, A245E/A246E 1993-Up	1	

TOYOTA

© Whatever It Takes Transmission Parts. Inc.

PART #	BANDS	QTY.	REFERENCE #
67022B	Band, A130/A140/A240 (1" Wide) 1983-Up	1	35810-32020

PART #	BUSHINGS	QTY.	REFERENCE #
67030B	Bushing Kit, A130/A140/A240 1983-Up	1	
57034A	Bushing, A130/A140/A240 Pump Body (1.500"ID)(Brass With Oil Pockets)	1	
57036B	Bushing, A130/A140/A240 Stator (Front)	1	
67037A	Bushing, A130/A140/A240 Stator (Rear)	1	
67038C	Bushing, A140/A240 Overdrive Direct Drum (Or Overdrive Sun Gear)	2	
67046A	Bushing, A130/A140/A240 Direct Drum	1	
67050B	Bushing, A130/A140/A240 Input Hub 1983-Up	1	
67052A	Bushing, A130/A140/A240 Sun Gear	2	
67063D	Bushing, A240 Driven Governor Gear To Case	1	

PART #	METAL CLAD SEALS	QTY.	REFERENCE #
57070A	Seal, A130/A140/A240 Pump 1983-Up	1	90311-38020
60072	Seal, A130/A140/A240 Linkage	1	
67075A	Seal, A130 Pinion Shaft 1983-Up	2	
67076B	Seal, A130/A140/A240 Axle (2.137"OD) 1983-Up	1	90311-34007
67076BA	Seal, A130/A140/A240 Axle (2.180"OD) 1983-Up	2	90311-35010
67076BC	Seal, A130/A140/A240 Axle (2.492"OD) 1983-Up	1	90311-34013
67077D	Seal, A241 (Corolla AWD) Axle (Drivers Side) 1989-92	1	90311-44004
127077A	Seal, A131 Axle (Drivers Side) (2.210"OD) 2000-Up	1	
57078A	Seal, A130/A140/A240 Speed-O Housing	1	

PART #	FRICTION CLUTCH	QTY.	REFERENCE #
67100A	Friction, A130/A140/A240 2nd Brake/Reverse/Overdrive Brake Clutch (.067") (33 Teeth) (5.60"OD)	9-12	35677-32040
67100B	Friction, A132L/A140 Reverse Clutch (.059") (33 Teeth) (5.60"OD) 1993-Up	5-6	
67100C	Friction, A140 Overdrive Brake (.075") (24 Teeth) (6.50"OD)	3	35677-20010
67100CA	Friction, A140/A240 2nd Brake Clutch (.075") (33 Teeth) (5.60"OD) 1986-Up	3	
67100D	Friction, A245E Reverse Clutch (.069") (33 Teeth) (5.60"OD) 1993-Up	5-6	
67102D	Friction, A240 Underdrive Brake Clutch (.067") (26 Teeth) (4.30"OD) 1985-92	3-4	
67102DA	Friction, A240 Underdrive Brake (.069") (26 Teeth) (4.30"OD) 1993-Up	3	
67102DB	Friction, A240 Underdrive Brake (.075") (34 Teeth) (4.30"OD) (Use 67103C)	3-4	
67103C	Friction, A140 4x4 Differential Lock (.075") (34 Teeth) (4.30"OD) (Also Fits A240 Underdrive Brake)	3-11	34261-12020
67106A	Friction, A130/A140/A240 Forward/Direct/Overdrive Direct Clutch (.067") (40 Teeth) (4.975"OD)	2-9	35633-32050
67106C	Friction, A140/A240 Direct/Overdrive Direct Clutch (.075") (40 Teeth) Smooth (4.975"OD) 1986-Up	2-6	35633-32031

PART #	STEEL CLUTCH	QTY.	REFERENCE #
67120B	Steel, A130/A140/A240 2nd Brake Clutch (.071") (12 Teeth) (4.60"ID) (With 4 Notched Teeth) 1983-Up	3-4	34648-32010
67120C	Steel, A140 Overdrive Brake Clutch (.071") (12 Teeth) (4.60"ID) 1983-86 (Also Fits A130/A140/A240 Reverse Clutch 1983-Up)	3-12	
67120CA	Steel, A140 Overdrive Brake Clutch (.071") (12 Teeth) (5.60"ID) 8/1986-Up	6	35648-20010
67120CB	Steel, A140 Overdrive Brake (.098") (12 Teeth) (5.60"ID) 1991-Up	2	
67121D	Steel, A240E/A240L/A241E Underdrive Clutch (.071") (20 Teeth) (3.56"ID) 1985-Up	3-12	34264-12010
67121DA	Steel, A240 Underdrive Clutch (.071") (8 Teeth) (3.420"ID) 1993-Up	3	34264-12020
67122A	Steel, A130/A140/A240 Forward/Direct/Overdrive Direct Clutch (.071") (8 Teeth) (4.160"ID)	3-9	
67122C	Steel, A140 Overdrive Direct Clutch (.071") (20 Teeth) (4.145"ID) 8/1986-Up	2-3	35634-20010
67122D	Steel, A240 Underdrive Brake Clutch (.071") (8 Teeth) (3.15"ID)	3	61475
67130B	Steel, A130/A140/A240 Reverse Clutch (.071") (12 Teeth) (4.60"ID) (Use 67120C)	5-8	35648-32020
67130D	Steel, A240 Reverse (.071") (12 Teeth) (4.72"ID) 1993-Up	5-8	

PART #	CLUTCH PRESSURE PLATES	QTY.	REFERENCE #
67140C	Pressure Plate, A140 Overdrive Brake Clutch	1	
67140D	Pressure Plate, A240 Underdrive Clutch	1	
67142CA	Pressure Plate, A140 Overdrive Direct Clutch (24 Teeth) (3.08mm) 8/1986-Up	1	
67142D	Pressure Plate, A240 Underdrive Brake Clutch	1	

© Whatever It Takes Transmission Parts. Inc.

PART #	CLUTCH PRESSURE PLATES (Continued)	QTY.	REFERENCE #
67144B	Pressure Plate, A130/A140/A240 2nd Brake Clutch	1	
67146A	Pressure Plate, A130/A140/A240 Forward & Direct Clutch (3.37mm) (8 Teeth)	1-2	
67146AA	Pressure Plate, A130/A140/A240 Forward & Direct Clutch (3.00mm) (8 Teeth)	1-2	
67146AB	Pressure Plate, A130/A140/A240 Forward & Direct Clutch (2.80mm) (8 Teeth)	1-2	
67146AC	Pressure Plate, A130/A140/A240 Forward & Direct Clutch (2.50mm) (8 Teeth)	1-2	
67146B	Pressure Plate, A130/A140/A240 Forward & Direct Clutch (3.60mm) (8 Teeth)	1-2	
67146BA	Pressure Plate, A130/A140/A240 Forward & Direct Clutch (3.83mm) (8 Teeth)	1-2	
67146BB	Pressure Plate, A130/A140/A240 Forward & Direct Clutch (4.22mm) (8 Teeth)	1	
67150A	Pressure Plate, A130/A140/A240 Reverse Clutch	1	

PART #	OIL SEALING RINGS	QTY.	REFERENCE #
67175B	Ring Kit, A130 1983-Up	1	
67175C	Ring Kit, A140E/A141E/A142L/A240E 1983-Up	1	
67175DA	Ring Kit, A245E/A246E/A247E 1992-02	1	
67177AT	Ring, A130/A140/A240 Forward Clutch (Teflon)	2-3	
67179A	Ring, A130/A140/A240 Direct Clutch (Metal)	2	61200
67184AT	Ring, A130/A140/A240 Intermediate Shaft (Teflon)	1	
67185CT	Ring, A140 Overdrive Direct Clutch (Teflon)	2	
67185D	Ring, A240 Underdrive Support To Drum (Metal)	2	
67195AT	Ring, A130/A140/A240 2nd Coast Servo (Teflon)	1	

PART #	VALVE BODY KITS	QTY.	REFERENCE #
T67165DB	Shift Kit, A245E/A246E 2003-08	1	

PART #	WASHERS & BEARINGS	QTY.	REFERENCE #
67207C	Lock Washer, A140 Overdrive Planet Bearing To Nut	1	90209-40001
67211AA	Washer, A130/A140/A240 Stator To Direct Drum	1	35616-32010
67214D	Washer, A240 Underdrive Drum To Sprag	1	
67216D	Race, A240 Underdrive Sun Gear To Countershaft	1	
67217C	Washer, A140 Overdrive Planet To Sprag (.057")	1	34737-32011
67217CA	Washer, A140 Overdrive Planet To Sprag (.109")	1	
67217D	Bearing, A240 Underdrive Sun Gear To Center Shaft	1	
67219C	Race, A140 Overdrive Drum To Rear Cover (Front) 1983-86	1	35789-32090
67219CA	Bearing W/Race, A140 Overdrive Drum To Rear Cover 1987-Up	1	90374-28013
67220C	Bearing, A140 Overdrive Drum To Rear Cover 1983-86	1	90374-28004
67221C	Race, A140 Overdrive Drum To Rear Cover (Rear) 1983-Up	1	35789-20020
67225A	Race, A130/A140/A240 Stator To Forward Drum (0.8mm) (Front)	1	35789-32020
67225AB	Race, A130/A140/A240 Stator To Forward Drum (1.4mm) (Front)	1	35789-32030
67226A	Bearing, A130/A140/A240 Stator To Forward Drum	1	90374-28005
67227A	Race, A130/A140/A240 Stator To Forward Drum (Rear)	1	35789-32010
67229A	Washer, A130/A140/A240 Direct Drum To Forward Drum 1983-Up (.138" Thick)(2.210"ID)	1	35616-32021
67231A	Race, A130/A140/A240 Forward Drum To Hub (Front) (Also Fits A130/A140/A240 Forward Hub To Planet) (Front)	1-2	35789-32040
67232A	Bearing, A130/A140/A240 Forward Drum To Hub (Also Fits A130/A140/A240 Forward Hub To Planet)	1-2	90374-22001
67233A	Race, A130/A140/A240 Forward Drum To Hub (Rear)	1	35789-32050
67233D	Race, A245 Forward Drum To Hub (Rear) 1993-95	1	35789-12040
67234A	Race, A130/A140/A240 Forward Hub To Front Planet (Front) (Use 67231A)	1	
67235A	Bearing, A130/A140/A240 Forward Hub To Front Planet (Use 67232A)	1	
67235D	Bearing, A245 Forward Hub To Front Planet 1993-95	1	90374-25007
67236A	Race, A130/A140/A240 Forward Hub To Front Planet (Rear)	1	35789-32060
67237A	Race, A130/A140/A240 Front Planet To Sun Gear (Front)	1	35789-32070
67238A	Bearing, A130/A140/A240 Front Planet To Sun Gear	1	90374-30006
67238D	Bearing, A245 Front Planet To Sun Gear 1993-95	1	90374-28011
67241A	Washer, A130/A140/A240 Rear Planet To Rear Ring Gear (Plastic) Tabs Are In The Center ID Of Washer Straight Across Center	1	35738-12010
67244A	Washer, A130/A140/A240 Shell To Sprag (2 3/4"OD) Plastic	1	35739-32011
67246A	Race, A130/A140/A240 Sun Gear To Ring Gear Hub (Front)	1	35789-22010
67247A	Bearing, A130/A140/A240 Sun Gear To Rear Ring Gear Hub (3 Piece Type)	1	90374-24002
67248A	Race, A130/A140/A240 Sun Gear To Rear Ring Gear Hub (Rear)	1	35789-32080
67260A	Bearing, A240 Underdrive Sun Gear To Support	1	
67262D	Race, A245E Case To Drive Transfer Gear (This Looks Like A Case Sleeve With 2 Cup Races Made Into It)	1	
67263B	Ball Bearing, A130/A240 Case To Intermediate Shaft (Also A240 Intermediate Shaft to Rear Cover)	1-2	90363-40024

TOYOTA

© Whatever It Takes Transmission Parts. Inc.

67265A	Washer, A130/A140 Governor To Cover (Plastic)	1	
67265D	Washer, A240 Governor To Cover	1	
67266B	Washer, A130/A240 Governor Gear To Case	1	
67266C	Washer, A140 Under The Governor (Steel)	1	
67271A	Ball Bearing, A130 Intermediate Shaft To Rear Cover	1	
67271D	Ball Bearing, A240 Intermediate Shaft To Rear Cover (Use 67263B)	1	90363-40024
67273D	Cup Race, A240 Center Shaft To Pinion	2	
67274B	Bearing W/Race, A130/A140 Pinion (18 Rollers)	1	
67274BA	Bearing W/Race, A130/A140 Pinion (20 Rollers)	1	90366-35084
67274BB	Bearing W/Race, A130/A140 Pinion (21 Rollers)	1	90366-35090
67274D	Tapered Bearing, A240 Center Shaft To Pinion	2	
67276D	Caged Roller Bearing, A240 Bell To Countershaft	1	
67277D	Race, A240 (Inner) For Roller Bearing #276	1	
67280B	Cup Race, A130/A140 Driven Transfer Gear	1	
67280D	Bearing, A240 Underdrive Drum Support To Driven Transfer Gear	1	
67281B	Tapered Bearing, A130/A140 Driven Transfer Gear	1	90366-40010
67281D	Roller Bearing, A240 Support To Center Driven Gear	1	
67289CA	Bearing W/Race, A140 Differential (Ring Gear Side) 23 Rollers 1987-Up (Cast # 44KB721)	1	90366-44001
67290B	Shim, A130/A140 Differential Bearing Cup Race To Aluminum Differential Retainer	1	
67292B	Bearing W/Race, A130 Differential (Both Sides) (20 Rollers) 1984-89 (Cast # TR080702J)	1-2	90368-38006
67292C	Bearing W/Race, A130/A140 Differential (Both Sides) (20 Rollers) 1984-86 6 (Cast # 57390A-N)	1-2	90368-40002
67292CB	Bearing W/Race, A140 Differential (Speed-O Gear Side) (24 Rollers) 1987-Up (Cast # TRA080702)	1	90366-40016
67293	Shim, A130/A140/A240 Between Differential Bearing Cup & Case	1	

PART #	GASKETS & RUBBER COMPONENTS	QTY.	REFERENCE #
67300B	Gasket, A130/A140 Bottom Pan	1	35168-32010
67300D	Gasket, A240 Bottom Pan	1	
67300DA	Gasket, A245E/A246E Bottom Pan (18 Bolt) 1992-02	1	61170A
67300DB	Gasket, A245E/A246E Bottom Pan (18 Bolt) 2003-Up	1	
67303B	Gasket, A130L Differential Cover	1	
67303BA	Gasket, A131L Differential Cover	1	41182-12010
67303BB	Gasket, A132L Differential Cover	1	35144-10010
67303C	Gasket, A140 Differential Cover	1	
67304CB	Gasket, A140 Overdrive Cover (Rear Cover) 6/1991-01	1	
67304C	Gasket, A140 Overdrive Cover 1983-86	1	34112-32010
67311B	O-Ring, A130/A140/A240 Pump	1	90301-99024
67320DB	Gasket, A241H Valve Body (Upper) (Corolla AWD)	1	35433-12040
67321DB	Gasket, A241H Valve Body (Lower) (Corolla AWD)	1	35434-12020
67322DB	Gasket, A241H Valve Body Tube Cover (Corolla AWD)	1	35172-12020
67326B	Gasket, A130/A140 Filter	1	35339-32010
67326D	Gasket, A240 Filter	1	35339-12010
67345B	O-Ring, A130/A140 Governor Cover	1	90301-67001
67375A	O-Ring, A130/A140 Pinion Center Plug	1	
67399B	O-Ring, A130/A140 Pinion Retainer	1	

PART #	TECHNICAL MANUALS	QTY.	REFERENCE #
67400A	Use 67401A	1	
67400B	Technical Manual, A130	1	83-130TM
67400C	Technical Manual, A140	1	83-TOY140TM
67400D	Technical Manual, A240	1	83-TOY240TM
67401A	CD, Technical Manual, (MX17, Sprint, Suzuki) On CD Rom	1	

PART #	ELECTRICAL COMPONENTS	QTY.	REFERENCE #
67410A	Neutral Switch, A130/A140/A240 (9 Prong Connector) (Connector Is 1 1/4" Long & 1/2" Wide)	1	
67410AA	Neutral Switch, A130/A140/A240 (9 Prong Connector) (Connector Is 3/4" Long & 1/2" Wide)	1	
67415C	Sensor, A140 (Replaces Governor) Plastic Housing	1	
67415CA	Sensor, A140 (Replaces Governor) Aluminum Housing (2 Prong Round Connector)	1	
67415CB	Sensor, A140 (Replaces Governor) Aluminum Housing (2 Prong Oval Connector)	1	
67420CK	Solenoid, A140/A141E Shift (2 Solenoid & 2 Brackets) 1984-Up (Also Fits A240E/A241E/A244E 1987-99) (Rostra)	1	52-0230
67420DK	Solenoid Kit, A240E/A241E/A244E (2 Shift & 2 Lock-Up Solenoids) 1987-99 (Rostra)	1	52-9001
67420DAK	Solenoid Kit, A245E/A246E/A247E (2 Shift Solenoids & 1 Bracket) 1989-07 (Rostra)	1	
67420DBK	Solenoid Kit, A245E/A246E/A247E (2 Shift & 1 Lock-Up Solenoids) 1989-04 (Rostra)	1	52-9004

© Whatever It Takes Transmission Parts. Inc.

PART #	ELECTRICAL COMPONENTS (Continued)	QTY.	REFERENCE #
67420DCK	Solenoid Kit, A245E/A246E/A247E (2 Shift, 1 EPC & 1 Lock-Up Solenoids With Brackets) 2002-04 (Rostra)	1	
67420DDK	Solenoid Kit, A245E/A246E/A247E (2 Shift, 1 EPC & 1 Lock-Up Solenoids With Brackets) 2004-Up (Rostra)	1	
T67171DA	Reprogramming Kit, A245E (Hot Rod/Street Show Off) (Transgo) (Toyota Corolla 1993-02) Geo Prizm 1993-01) (For Nitrous Or Turbo)	1	
67421C	Solenoid, A140 1-2 Shift (With Bracket)	1	85420-32020
67421D	Solenoid, A240E/A241E Shift (With Bracket) 1987-99	2	52-0204
67422C	Solenoid, A140 2-3 Shift (With Bracket)	1	85420-32040
67423D	Solenoid, A240 Underdrive (With Bracket)	1	
67425B	Solenoid, A140 Lock-Up (External With Wire Harness) 1 Prong Round Connector	1	
67425BA	Solenoid, A140 Lock-Up (External With Wire Harness) 2 Prong Triangle Connector	1	
67425BB	Solenoid, A140 Lock-Up (External With Connector Made On The Solenoid) 1 Prong	1	
67425D	Solenoid, A240 Lock-Up (With Bracket)	1	
67425DA	Solenoid, A245E/A246E Lock-Up (With Bracket)	1	
67425DB	Solenoid, A245E (#3) Lock-Up (With 1 Blade Green Connector)	1	
67431D	Solenoid, A245E/A246E SLT (EPC)(3 7/8" Long)(2 Blade) 2002-03	1	
67431DA	Solenoid, A245E/A246E/A247E SLT (EPC) (3 7/8" Long)(2 Pins) 2004-Up	1	
67436C	Sensor, A140 VSS (3 Prong Connector, With Driven Speed-O Gear)(5 7/16" Overall Length) (.865"OD Where Housing Goes Into The Case)	1	
67436D	Sensor, A240 VSS (3 Prong Connector, With Driven Speed-O Gear)(5" Overall Length) (.865"OD Where Housing Goes Into The Case)	1	
67446CA	Wire Harness, A140 (Internal With 2 Prong Connector)	1	
67446CE	Wire Harness, A140 (Internal With 5 Prong Connector)	1	

PART #	HARD PARTS	QTY.	REFERENCE #
67500A	Pump Complete, A240 1985-Up (67510A & 67520A)	1	
67500B	Pump Complete, A130/A140 (Toyota Built) 11/1984-Up (67510BB & 67520BA)	1	
67500BA	Pump Complete, A130/A140 (Aisin Warner Built) 4/1984-Up (67510BA & 67520A)	1	
67500C	Pump Complete, A140 (Toyota Built) 1/1983-4/1983 (67510C & 67520C)	1	
67510A	Pump Body W/Gears, A240 (With 6 Bolts To Case) 1985-Up	1	
67510BA	Pump Body W/Gears, A130/A140 (Aisin Warner Built) 1984-Up (7 Bolts To Case)	1	
67510BB	Pump Body W/Gears, A130/A140 (Toyota Built) 11/1984-Up (7 Bolts To Case)	1	
67510C	Pump Body W/Gears, A140 (7 Bolts To Case) 1/1983-4/1983 (Fits 67520C Stator)	1	

PART #	PUMP COMPONENTS	QTY.	REFERENCE #
67520A	Stator, A130/A140/A240 Flat Pads (1.850"OD Of Direct Drum Bushing Support) With Bushing Inside Rear 4/1983-Up (With Short Vent Channel)	1	35370-32022
87520A	Stator, Some A240 (Late With Bearing Inside)	1	
67520BA	Stator, A130/A140 Stepped Pads (Toyota Built) 11/1984-Up	1	35370-32031
67520C	Stator, A140 Flat Pads (With Long Vent Channel) 1/1983-4/1983	1	35370-32010
67529A	Shaft, A130/A140/A240 Stator Shaft Tube	1	90374-22002

PART #	HARD PARTS (Continued)	QTY.	REFERENCE #
67545C	Housing, A140 Overdrive Brake Piston	1	
67550D	Drum, A240 Underdrive Clutch	1	
67551C	Drum, A140 Overdrive Direct (8 Teeth On Pressure Plate) 1983-7/1986	1	34601-32011
67551CA	Drum, A140 Overdrive Direct (24 Teeth On Pressure Plate) 8/1986-Up	1	
67554A	Drum, A130/A140/A240 Forward With Shaft (3 Clutch) 2/1984-Up	1	35701-32021
67554B	Drum, A130/A140/A240 Forward With Shaft (3 Clutch) 1/1983-1/1984	1	35701-32010
67554C	Drum, A140/A240 Forward With Shaft (4 Clutch) 5/1984-Up (With 2 Rings On Shaft)	1	35701-32031
67554CA	Drum, A245 Forward With Shaft (4 Clutch) With 3 Rings On Shaft	1	
67555BA	Drum, A130 Direct (2 Clutch) 1 7/8"ID Bushing 8/1983-1/1984	1	35605-32020
67555BB	Drum, A130/A240 Direct (2 Clutch) 1 7/8"ID Bushing 1/1984-Up	1	35605-20020
67555C	Drum, A140 Direct (2 Clutch) 1 7/8"ID Bushing 1/1983-1/1984	1	35605-32010
67555CA	Drum, A140 Direct (3 Clutch) 1 7/8"ID Bushing 2/1984-Up (Piston Is .385" Thick) Uses 1" Wide Band	1	35605-32030
67555CB	Drum, A140 Direct (3 Clutch) 1 7/8"ID Bushing 2/1984-Up (Piston Is .471" Thick) Uses 1" Wide Band	1	
67560C	Piston Kit, A140 Overdrive Brake Clutch 1983-7/1986	1	
67560CA	Piston Kit, A140 Overdrive Brake Clutch 8/1986-Up	1	
67560D	Piston Kit, A240 Underdrive Clutch	1	
67561C	Piston Kit, A140 Overdrive Direct Clutch 1983-7/1986	1	
67561CA	Piston Kit, A140 Overdrive Direct Clutch (.860" Thick) 8/1986-Up	1	
67561CB	Piston Kit, A140 Overdrive Direct Clutch (.780" Thick) 8/1986-Up	1	

© Whatever It Takes Transmission Parts. Inc.

67561D	Piston Kit, A240 Underdrive Brake Clutch	1	
67562B	Piston Kit, A130/A140 2nd Brake Clutch (12 Springs)	1	
67564A	Piston Kit, A130/A140/A240 Forward Clutch (3 Clutch) 2/1984-Up	1	
67564B	Piston Kit, A130/A140 Forward Clutch (3 Clutch) 1/1983-1/1984	1	
67564BA	Piston Kit, A140/A240 Forward Clutch (4 Clutch) 8/1984-Up	1	
67565B	Piston Kit, A130/A140 Direct Clutch (2 Clutch) 2.250"ID (.385" Thick Piston)	1	
67565C	Piston, A140 Direct Clutch (2 Clutch) 2.250"ID (.471" Thick Piston)	1	
67565CA	Piston Kit, A140 Direct Clutch (3 Clutch)	1	
67566B	Piston Kit, A130/A140/A240 Reverse Clutch	1	
67571C	Clutch Hub, A140 Overdrive Brake (Is Also The Pressure Plate For The Overdrive Direct Clutch (8 Teeth) 1983-7/1986	1	34624-32010
67580C	Planet, A140 Overdrive With Shaft 1983-7/1986	1	34710-32040
67580CA	Planet, A140 Overdrive With Shaft 8/1986-Up	1	
67580C-6	Pin Plugs, A140 (Overdrive Planet Pinion Gear Pins)	1	90334-03001
67582A	Planet, A130/A140/A240 Front	1	
67584A	Planet, A130/A140/A240 Rear (1.790" Overall Height)	1	
67586D	Planet, A240 Underdrive	1	
67590C	Ring Gear, A140 Overdrive	1	
67592A	Ring Gear, A130/A140/A240 Front (1.550" Tall)	1	35743-32040
67592AA	Ring Gear, A130/A140/A240 Front (1.437" Tall)	1	35743-32010
67594	Ring Gear, A130/A140/A240 Rear (1.100" Tall)	1	
67596D	Ring Gear, A240 Underdrive Input	1	
67602A	Hub, A130/A140/A240 Front Planet Ring Gear	1	
67604A	Hub, A130/A140/A240 Rear Planet	1	
67612B	Sun Gear, A130/A140/A240 (2 3/4" Long) 27 Teeth (1.465"OD Sprag Race)	1	35706-32012
67616D	Sun Gear, A240 Underdrive	1	
67622A	Shell, A130/A140/A240 Input Sun (39 Inner Teeth)	1	35790-32050

PART #	SPRAGS & ONE WAY CLUTCHES	QTY.	REFERENCE #
67640D	Sprag Assembly, A240 Underdrive	1	
67642B	Sprag Assembly, A130/A140/A240 One Way Clutch (1.465"ID) The 1.465"ID Is The OD Of The Sun Gear #67612B	1	35790-32050
97650	Sprag, A140 Overdrive (24 Lugs)(.450" Wide) 1985-Up	1	
57650C	Sprag, A130/A140/A240 One Way Clutch	1	
67650D	Sprag, A240 Underdrive Sprag	1	
67654A	Sprag, A130/A140/A240 #2 Sprag (20 Elements) (4.810"OD)	1	
67660D	Inner Race, A240 Support (Underdrive Drum)	1	
67661C	Outer Race, A140 Overdrive Sprag	1	34713-32010
67665A	Outer Race, A130/A140/A240 #2 Sprag (4.820"ID)	1	35795-32010

PART #	HARD PARTS (Continued)	QTY.	REFERENCE #
67676D	Shaft, A240 Underdrive Input (Countershaft)	1	35480-32022
67680B	Governor, A130/A140 (Gear Type)	1	
67680D	Governor, A240 (Gear Type) Without Gear	1	
67680DA	Reluctor, A245E (Replaces Governor)	1	
67681BA	Reluctor, A130/A140 (Replaces Governor Drive Gear)	1	
67683B	Gear, A130/A140 Governor Drive	1	
67684D	Gear, A240 Driven (For Governor)	1	
67685B	Support Sleeve, A130 Governor (Aluminum)	1	
67685D	Support Sleeve, A240 Governor	1	
67686B	Cover, A130/A140 Governor (For Gear Type Governor)	1	
67686D	Cover, A240 Governor	1	
67687B	Retainer, A130/A140 Governor Cover	1	
67689B	Adapter, A130 Governor Body Adapter (Aluminum)	1	
67694C	Retainer, A140 Plate (Overdrive Sprag)(44 Teeth)(.039" Thick)(3.647"OD)(2.626"ID)	1	34727-32010
67696B	Crush Sleeve, A130/A140 (For Pinion) 1" Long	1	41231-32010
67696D	Crush Sleeve, A240 (1/2" Long)	1	41231-12030
67699B	Oil Slinger, A130/A140	1	
67710B	Gear, A130 Output With Intermediate Shaft (55 Teeth) No Groove	1	
67710BA	Gear, A130 Output With Intermediate Shaft (55 Teeth) 1 Groove	1	
67710C	Gear, A140 Counter Drive (37 Teeth)	1	
67710CA	Gear, A140 Counter Drive (55 Teeth)	1	
67710D	Gear, A240 Output With Intermediate Shaft (45 Teeth)	1	
67710DA	Gear, A240 Output With Intermediate Shaft (56 Teeth) No Groove	1	
67710DB	Gear, A240 Output With Intermediate Shaft (56 Teeth) 1 Groove	1	
67710DE	Gear, A240 Output Without Intermediate Shaft (56 Teeth) With tapered Bearing	1	
67712B	Gear, A130/A140 Transfer Driven (35 Teeth) No Groove	1	
67712BA	Gear, A130/A140 Transfer Driven (35 Teeth) 1 Groove	1	

© Whatever It Takes Transmission Parts. Inc.

PART #	HARD PARTS (Continued)	QTY.	REFERENCE #
67712BB	Gear, A130/A140 Transfer Driven (52 Teeth)	1	
67712D	Gear, A240 Transfer Driven (50 Teeth)	1	
67715B	Differential, A130/A140 (65 Teeth) 1 Groove	1	
67715BC	Differential, A130/A140 (67 Teeth) 3 Groove (8 1/2”OD Ring Gear)	1	
67715BD	Differential, A130/A140 (67 Teeth) 2 Groove	1	
67715BE	Differential, A130/A140 (67 Teeth) 3 Groove (7 1/2”OD Ring Gear)	1	
67715BG	Differential, A130/A140 (67 Teeth) 3 Groove (7 7/8”OD Ring Gear)	1	
67715BH	Differential, A130/A140 (67 Teeth) 3 Groove (8”OD Ring Gear)	1	
67715BJ	Differential, A130/A140 (68 Teeth) 1 Groove (20 Roller Bearing By Speed-O Side) 23 Roller Bearing Ring Gear Side	1	
67715BL	Differential, A130/A140 (68 Teeth) 1 Groove (24 Roller Bearing By Speed-O Side) 22 Roller Bearing Ring Gear Side	1	
67715BM	Differential, A130/A140 (69 Teeth) 5 Groove	1	
67715BN	Differential, A130/A140 (71 Teeth) 3 Groove (1 By Housing) Yellow Speed-O (22 Roller Bearing By Ring Gear)	1	
67715BP	Differential, A130/A140 (71 Teeth) 3 Groove (2 By Housing) Yellow Speed-O Gear	1	
67715BQ	Differential, A130/A140 (71 Teeth) 3 Groove (1 By Housing) Black Speed-O Gear (23 Roller Bearing By Ring Gear)	1	
67715BR	Differential, A130/A140 (71 Teeth) 3 Groove (1 By Housing) Black Speed-O Gear (22 Roller Bearing By Ring Gear)	1	
67715BS	Differential, A130/A140 (71 Teeth) 3 Groove (1 By Housing) Yellow Speed-O Gear (23 Roller Bearing By Ring Gear)	1	
67715BT	Differential, A130/A140 (71 Teeth) 3 Groove (2 By Housing) Yellow Speed-O Gear (22 Roller Bearing By Ring Gear)	1	
67715BU	Differential, A130/A140 (71 Teeth) 3 Groove (2 By Housing) Yellow Speed-O Gear (23 Roller Bearing By Ring Gear)	1	
67715BV	Differential, A130/A140 (71 Teeth) 3 Groove (2 By Housing) Black Speed-O Gear (23 Roller Bearing By Ring Gear)	1	
67715BW	Differential, A130/A140 (71 Teeth) 3 Groove (2 By Housing) Black Speed-O Gear (22 Roller Bearing By Ring Gear)	1	
67715BX	Differential, A130/A140 (71 Teeth) 4 Groove (23 Roller Bearing By Ring Gear) 1.732”ID Of Bearing	1	
67715BY	Differential, A130/A140 (71 Teeth) 4 Groove (22 Roller Bearing By Ring Gear) 1.575”ID Of Bearing	1	
67715BYG	Differential, A130/A140 (71 Teeth) 5 Groove (23 Roller Bearing By Ring Gear) Black Speed-O Gear	1	
67715BZ	Differential, A130/A140 (88 Teeth) No Groove	1	
67715D	Differential, A240 (79 Teeth) 1 Groove (20 Roller Bearing Both Sides) 1.485”ID Bearing On Differential Housing Side (1.638”ID Bearing On Ring Gear Side)	1	
67715DA	Differential, A240 (79 Teeth) 1 Groove (20 Roller Bearing Both Sides) 1.485”ID Of Both Bearings	1	
67715DC	Differential, A240 (80 Teeth) 4 Groove (35 Teeth Yellow Speed-O Gear)	1	
67715DE	Differential, A240 (77 Teeth) 2 Groove (35 Teeth Yellow Speed-O Gear)	1	
67715DG	Differential, A240 (77 Teeth) 5 Groove (35 Teeth Black Speed-O Gear)	1	
67715DH	Differential, A240 (77 Teeth) 5 Groove (35 Teeth Yellow Speed-O Gear)	1	
67715DJ	Differential, A240 (88 Teeth) No Groove (35 Teeth Black Speed-O Gear) 1.058”OD Of Axle Hole	1	
67715DL	Differential, A240 (88 Teeth) No Groove (35 Teeth Black Speed-O Gear) 1.095”OD Of Axle Hole	1	
67715DN	Differential, A240 (89 Teeth) 6 Grooves (27 Teeth Gray Speed-O Gear)	1	
67716B	Housing, A130 Differential (Less Ring Gear) Blue Speed-O Gear (20 Roller Bearing On Ring Gear Side) 21 Roller Bearing On Speed-O Side	1	
67716BA	Housing, A130 Differential (Less Ring Gear) Blue Speed-O Gear (27 Roller Bearings On Both Sides)	1	
67716BB	Housing, A130 Differential (Less Ring Gear) Blue Speed-O Gear (20 Roller Bearings On Both Sides)	1	
67716BC	Housing, A130 Differential (Less Ring Gear) Blue Speed-O Gear (21 Roller Bearings On Both Sides)	1	
67716BQ	Housing, A140 Differential (Less Ring gear) Black Speed-O Gear (23 Roller Bearing On Ring Gear Side) 24 Roller Bearing On Speed-O Side	1	
67725B	Retainer, A130 Differential Bearing	1	
67725C	Retainer, A140 Differential Bearing (2.705”OD)	1	
67725CA	Retainer, A140 Differential Bearing With Hole On Side	1	
67726B	Cap, A130 Differential Bearing Cup To Case With Bolts	1	
67726C	Cap, A140 Differential Bearing Cup To Case With Bolts	1	

© Whatever It Takes Transmission Parts. Inc.

67730B	Pinion, A130/A140 (17 Teeth) 5 Groove	1	
67730BAK	Ring & Pinion, A140 (17 Teeth & 71 Teeth) 5 Groove Each	1	
67730BB	Pinion, A130/A140 (18 Teeth) No Groove	1	
67730BC	Pinion, A130/A140 (18 Teeth) 3 Groove	1	
67730BCK	Ring & Pinion, A130 (18 Teeth Pinion, 67 Teeth Ring Gear) 3 Groove Each	1	
67730BD	Pinion, A130/A140 (18 Teeth) 4 Groove (1 Next To Bearing)	1	
67730BDK	Ring & pinion, A140 (18 Teeth Pinion, 71 Teeth Ring Gear) 4 Grooves Each	1	
67730BE	Pinion, A130/A140 (18 Teeth) 4 Groove (3 Next To Bearing)	1	
67730BF	Pinion, A130/A140 (19 Teeth) 2 Groove	1	
67730BFK	Ring & Pinion, A130/A140 (19 Teeth Pinoin, 67 Teeth Ring Gear) 2 Grooves Each (3.52 Ratio) (Can Use 67730BGK)	1	
67730BG	Pinion, A130/A140 (19 Teeth) 1 Groove In Center	1	
67730BGK	Ring & Pinion, A130/A140 (19 Teeth Pinion, 65 Teeth Ring Gear) 1 Groove Each (3.42 Ratio) (Can Use 67730BFK)	1	
67730BH	Pinion, A130/A140 (19 Teeth) 1 Groove At Edge	1	
67730BJ	Pinion, A130/A140 (19 Teeth) 3 Groove (1 Next To Bearing)	1	
67730BJK	Ring & Pinion, A140 (19 Teeth Pinion, 71 Teeth Ring Gear) 3 Grooves Each (3.74 Ratio)	1	
67730BK	Ring & Pinion, A130 (17 Teeth Pinion, 69 Teeth Ring Gear) 5 Grooves Each	1	
67730BL	Pinion, A130/A140 (19 Teeth) 3 Grooves (2 Next To Bearing)	1	
67730BM	Pinion, A130/A140 (20 Teeth) 1 Groove In Center	1	41211-32010
67730BMK	Ring & pinion, A140 (20 Teeth Pinion, 68 Teeth Ring Gear) 1 Groove In Center (3.40 Ratio)	1	
67730BN	Pinion, A130/A140 (20 Teeth) 2 Groove	1	
67730D	Pinion Gear, A240 (28 Teeth) 1 Groove (With Governor Drive Gear)	1	
67730DA	Pinion Gear, A240 (28 Teeth) 1 Groove (No Governor Drive Gear)	1	
67730DE	Pinion Gear, A240 (29 Teeth) 5 Groove	1	
67730DF	Pinion Gear, A240 (29 Teeth) No Groove (No Governor Drive Gear)	1	
67730DJ	Pinion Gear, A240 (27 Teeth) 4 Groove	1	
67735B	Retainer, A130/A140 Pinion (Aluminum With Seal) Can Use 67735BA	1	
67735BA	Retainer, A130/A140 Pinion (Steel Without Ring) Can Use 67735B	1	
67736B	Pinion Center, A130/A140 (Aluminum) 1 Bolt (1.020"OD)	1	
67740B	Valve Body, A130 Non Lock-Up (Has An Aluminum Rod In Lock-Up Valve Bore)	1	
67740BA	Valve Body, A130 Lock-Up (Has Valve & Spring In Lock-Up Valve Bore)	1	
67740C	Valve Body, A140 (No Solenoids)	1	
67740CA	Valve Body, A140 (With 2 Solenoids)	1	
67740D	Valve Body, A240 (With 2 Solenoids)	1	
67740DA	Valve Body, A240 (With 3 Solenoids)	1	
67740DB	Valve Body, A245E (With 3 Solenoids)	1	
67740DC	Valve Body, A240 (With 1 Solenoids)	1	
67740DD	Valve Body, A246E (With 4 Solenoids)	1	

PART #	VALVE BODY COMPONENTS	QTY.	REFERENCE #
S67741BT-2	Sleeve, A130 TV Boost Valve (Sonnax)	1	
S67741CT-2	Sleeve, A140 TV Boost Valve (Large Ratio) (Sonnax)	1	

PART #	HARD PARTS (Continued)	QTY.	REFERENCE #
67750D	Bell Housing, A240 (Starter At 3:00) 18 Bolts To Case	1	
67750DA	Bell Housing, A240 (19 Bolts To Case) Cast # 9110	1	
67750DB	Bell Housing, A240 (Double Starter) 18 Bolts To Case (Cast # 9115)	1	
67750DC	Bell Housing, A240 (Starter At 1:00) 18 Bolts To Case (Cast # 9117)	1	
67750DD	Bell Housing, A240 (Starter At 11:00) 17 Bolts To Case (Cast # 9130)	1	
67750DG	Bell Housing, A245E (Starter At 2:00) 17 Bolts To Case (Cast # 9132)	1	
67750DH	Bell Housing, A240 (Starter At 11:00) 18 Bolts To Case (Cast # 9112)	1	
67750DJ	Bell Housing, A240 (Starter At 11:00) 19 Bolts To Case (Cast # 9114)	1	
67750DK	Bell Housing, A240 (Starter At 11:00) 19 Bolts To Case (AWD) (Cast # 9116)	1	
67758B	Differential Cover, A130 (Toyota)	1	
67758BA	Differential Cover, A130 (Nova)	1	
67758C	Differential Cover, A140 (Smooth) No Fins 1983-86	1	
67758CA	Differential Cover, A140 (With Fins) 1987-Up	1	

© Whatever It Takes Transmission Parts. Inc.

PART #	HARD PARTS (Continued)	QTY.	REFERENCE #
67759B	Rear Cover, A130 (11 Bolt) No Mount	1	
67759BA	Rear Cover, A130 (11 Bolt) With 3 Bolt Mount	1	
67759C	Rear Cover, A140 (Overdrive) 11 Bolt (No Mount) 1983-7/1986 (Part # 545 Bolts In The Cover)	1	34101-32021
67759CA	Rear Cover, A140 (Overdrive) 11 Bolt (With 2 Bolt Mount) 8/1986-Up	1	
67759CAK	Overdrive Assembly, A140 (11 Bolt Cover) With 2 Bolt Mount 8/1986-Up (Contains: #795 To #759)	1	
67759CB	Rear Cover, A140 (Overdrive) 12 Bolt (With 4 Bolt Mount) 8/1986-Up	1	
67759CBK	Overdrive Assembly, A140 (12 Bolt Cover) With 4 Bolt Mount 8/1986-Up (Contains: #795 To #759)	1	
67759CC	Rear Cover, A140 (Overdrive) 11 Bolt (No Mount) 8/1986-Up (Part # 545 Slides In The Cover)	1	
67759CCK	Overdrive Assembly, A140 (11 Bolt Cover) No Mount 8/1986-Up (Contains #795 To #759)	1	
67759CK	Overdrive Assembly, A140 (11 Bolt Cover) No Mount 1983-7/1986 (Contains: #795 To # 759)	1	
67759D	Rear Cover, A240 (13 Bolt Holes)	1	
67760B	Case, A130 (Starter At 3:00) 15 Round Holes Bell To Motor	1	
67760BA	Case, A130 (Starter At 3:00) 14 Round Holes Bell To Motor	1	
67760BB	Case, A130 (Starter At 11:00) 14 Round Holes Bell To Motor	1	
67760BC	Case, A130 (Double Starter) 14 Round Holes Bell To Motor	1	
67760BD	Case, A130 (Starter At 11:00) 12 Round Holes Bell To Motor	1	
67760BE	Case, A130 (Starter At 2:00) 13 Round Holes Bell To Motor	1	
67760C	Case, A140 (17 Round Holes Bell To Motor) 1983-8/1985	1	
67760CA	Case, A140 (18 Round Holes Bell To Motor) 9/1985-1986	1	
67760CB	Case, A140 (Closed Starter At 1:00) 17 Round Holes Bell To Motor 1987-Up	1	
67760CC	Case, A140 (Closed Starter At 1:00) 18 Round Holes Bell To Motor 1987-Up	1	
67760CD	Case, A140 (Open Starter At 1:00) 18 Round Holes Bell To Motor (11 Bolt Rear Cover) 1987-Up	1	
67760CE	Case, A140 (Open Starter At 1:00) 18 Round Holes Bell To Motor (12 Bolt Rear Cover) (Uses A Speed Sensor In Case) 1987-Up	1	
67760CF	Case, A140 (Open Starter At 1:00) 18 Round Holes Bell To Motor (12 Bolt Rear Cover) (No Speed Sensor In Case)	1	
67760D	Case, A240 (Without Cable Bracket) 18 Bolt Holes To Bell	1	
67760DA	Case, A240 (With 2 Bolt Cabel Bracket) 18 Bolts To Bell	1	
67760DB	Case, A240 (With 2 Bolt Cable Bracket) 19 Bolts To Bell	1	
67760DC	Case, A240 (Without Cable Bracket) 18 Bolts To Bell (Has 3 Threaded Mount Bosses On The Side Facing Linkage) (Cast # 9110)	1	
67760DG	Case, A245E (17 Bolts To Bell) (Cast # 9130)	1	
67760DH	Case, A240 AWD (19 Bolts To Bell) (Cast # 9113)	1	
67765B	Pan, A130/A140 Bottom	1	
67765D	Pan, A240 Bottom	1	
67765DB	Pan, A245E Bottom 1992-02	1	
67765DBA	Pan, A245E Bottom 2003-Up	1	
67774CK	Housing, A130/A140 Speed-O With Driven Gear (Cable Type)	1	
S67775	Bolt, A130/A140 Converter (9x1.25mm) (Sonnax)	1	
67777BK	Bolt Set, A130/A140/A240 Pump To Case	1	
67778AK	Bolt Set, A130/A140/A240 Stator To Pump Body	1	
67779BK	Bolt Set, A130/A140 Pan To Case	1	
67780BK	Bolt Set, A130 Rear Cover To Case	1	
67780CK	Bolt Set, A140 Overdrive Cover To Case	1	
67782CK	Bolt Set, A140 Valve Body To Case	1	
67784CK	Bolt Set, A140 Overdrive Brake Assembly To Cover 1983-7/1986	1	
67784CAK	Bolt Set, A140 Overdrive Brake Assembly To Cover 1986-Up	1	
67785CK	Bolt Set, A140 Holds Differential Cover To Case	1	
67790DK	Bolt Set, A240 Countershaft Support To Case	1	
67793CK	Bolt Set, A140 Differential Retainer To Case (Rear)	1	
67795C	Nut, A140 Holds Counter Drive Gear To Overdrive Planet	1	90179-40002
67795D	Nut, A240 Holds Pinion To Countershaft	1	
67796B	Nut, A130/A140 Holds Driven Transfer Gear To Pinion	1	
67796D	Nut, A240 Holds Driven Gear To Countershaft	1	
67838B	Axle Flange, A130/A140 Short Shaft (6 Studs)	1	
67847BA	Gear, A130/A140 Drive Speed-O (Yellow) (25 Teeth)	1	33481-32010
67847BB	Gear, A130/A140 Drive Speed-O (Black) (27 Teeth)	1	33481-32020
67858B	Torsion Spring, A130 (For Governor Sleeve)	1	
67861C	Snap Ring, A140 Overdrive Brake Pressure Plate	1	
67861D	Snap Ring, A240 Holds Top Pressure Plate In Underdrive Drum	1	
67862D	Snap Ring, A240 Holds Retainer In Underdrive Drum	1	
67863C	Snap Ring, A140 Holds Overdrive Direct Pressure Plate In (.064")	1	
67864C	Snap Ring, A140 Overdrive Direct Drum (Top)	1	
67864D	Snap Ring, A240 Holds Top Pressure Plate Underdrive Drum	1	

© Whatever It Takes Transmission Parts. Inc.

67865C	Snap Ring, A140 Holds Retainer In Overdrive Direct Drum	1		
67867C	Snap Ring, A140 Holds Retaining Plate In Overdrive Planet	1		
67867D	Snap Ring, A240 Holds Underdrive Planet To Pinion	1		
67868D	Snap Ring, A240 Holds Ring Gear On Countershaft	1		
67873B	Snap Ring, A130/A140/A240 Holds 2nd Brake Pressure Plate	2		
67876A	Snap Ring, A130/A140/A240 Forward Drum (Top)	1		
67877A	Snap Ring, A130/A140/A240 Holds Forward Retainer In	1		
67878A	Snap Ring, A130/A140/A240 Direct Drum (Top) (5 5/16”OD)	1		
67882A	Snap Ring, A130/A140/A240 Front Planet Hub To Ring Gear	1		
67883B	Snap Ring, A130/A140 Holds 2nd Brake Drum In Case	1		
67884A	Snap Ring, A130/A140/A240 Sun Gear To Bowl (Rear) 1.760”OD	1		
67886A	Snap Ring, A130/A140/A240 Shell To Sun Gear (Front)	1		
67888A	Snap Ring, A130/A140/A240 Holds Sprag In Outer Race (5.110”OD)	2		
67889A	Snap Ring, A130/A140/A240 Holds Hub In Rear Ring Gear	1		
67892A	Snap Ring, A130/A140/A240 Holds Reverse Top Pressure Plate	1		
67893A	Snap Ring, A130/A140/A240 Holds Reverse Retainer In	1		
67894C	Snap Ring, A140 Holds Intermediate Shaft Bearing In Case	1		
67895B	Snap Ring, A130/A140 Holds Pinion Retainer In Case	1		
67896B	Snap Ring, A130/A140/A240 Holds Servo Cover In	1		
67898C	Snap Ring, A140 Holds Overdrive Ring Gear In Drive Gear	1		
67905B	Servo Assembly, A130/A140/A240	1		
67906B	Spring, A130/A140/A240 Servo	1		
67907B	Piston, A130/A140/A240 Servo	1		
67909B	Cover, A130/A140/A240 Servo	1		
67925B	Accumulator Assembly, A130	1		
67925C	Accumulator Assembly, A140	1		
67925D	Accumulator Assembly, A240	1		
67950D	Accumulator Assembly, A240 B-4 With Oil Gallery Cover	1		
67956B	Housing, A130/A140/A240 2nd Brake Piston	1		
67960C	Piston, A140 Overdrive Clutch 1983-Up	1		34602-32010
67961C	Piston, A140 Overdrive Direct Clutch 1983-7/1986	1		
67961CA	Piston, A140 Overdrive Direct Clutch (.860” Thick) 8/1986-Up	1		
67961CB	Piston, A140 Overdrive Direct Clutch (.780” Thick) 8/1986-Up	1		
67962B	Piston, A130/A140/A240 2nd Brake	1		
67964A	Piston, A130/A140/A240 Forward Clutch	1		
67965B	Piston, A130/A140/A240 Direct Clutch (2.250”ID) (.385” Thick)	1		
67965C	Piston, A140 Direct Clutch (2.250”ID) (.471” Thick)	1		
67965CA	Piston, A140 Direct Clutch (For 3 Clutch Drum)	1		
67966A	Piston, A130/A140/A240 Reverse Clutch	1		
67970C	Spring, A140 Overdrive Brake Clutch Return (Also Fits A130/A140/A240 Direct Clutch Return)	18-36		90501-11023
67970D	Spring, A240 Underdrive Brake Clutch Return	1		
67971C	Spring, A140 Overdrive Direct Clutch Return	1		
67971D	Spring, A240 Underdrive Clutch Return	1		34360-12010
67972B	Retainer W/Spring, A130/A140/A240 2nd Brake	1		
67974A	Spring, A130/A140/A240 Forward Clutch Return	1		
67975A	Spring, A130/A140/A240 Direct Clutch Return 1983-Up (Use 67970C)	18		
67976A	Retainer W/Spring, A130/A140/A240 Reverse Clutch Return	1		
67980C	Retainer, A140 Overdrive Clutch Return Spring	1		34613-30010
67984A	Retainer, A130/A140/A240 Forward Clutch Spring	1		
67991B	Linkage Assembly, A130 (Internal)	1		
67991C	Linkage Assembly, A140 (Internal)	1		
67991D	Linkage Assembly, A240 (Internal)	1		
67991S	Sleeve, A130/A140 Holds Pin On Linkage Shaft	1		
67992C	Shift Lever, A140 (External)	1		
67995B	Park Pawl Assembly, A130	1		
67995C	Park Pawl Assembly, A140	1		
67996B	Cooler Line Fitting, A130/A140 (Straight)	1		
67996BA	Cooler Line Fitting, A130/A140 (90 Degree Elbow)	1		
67996BB	Cooler Line Fitting, A130/A140 (55 Degree Elbow)	1		
67999B	Tube Assembly, A130 For Valve Body	1		
67999C	Tube Assembly, A140 For Valve Body	1		

© Whatever It Takes Transmission Parts. Inc.

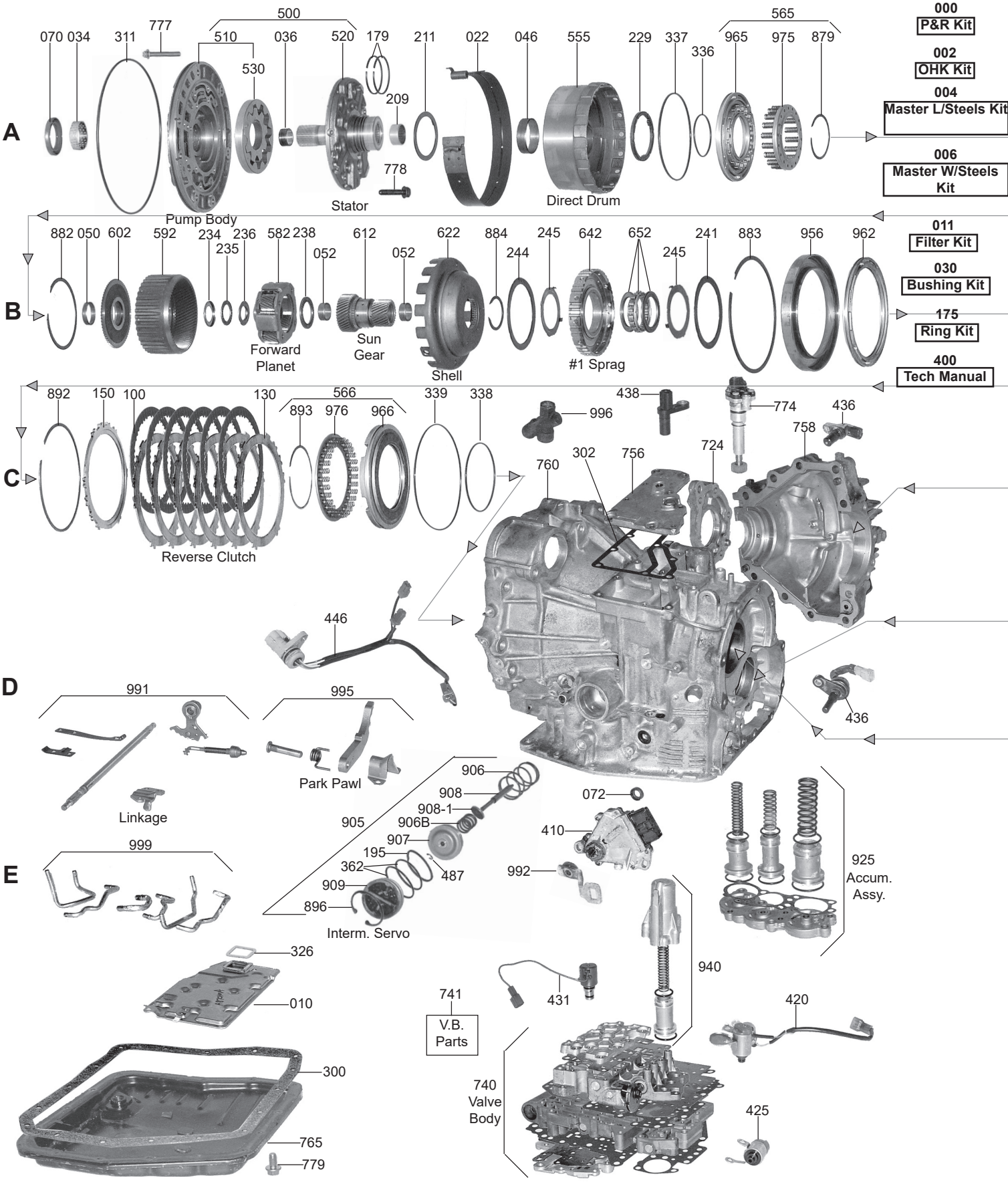
A
B
C
D
E
070 034 311 777 500 510 530 036 520 179 209 211 022 046 555 229 337 336 565 965 975 879
778
Pump Body
Stator
Direct Drum
882 050 602 592 234 235 236 582 238 052 612 052 622 884 244 245 642 652 245 241 883 956 962
Forward Planet
Sun Gear
Shell
#1 Sprag
892 150 100 130 566 893 976 966 339 338
Reverse Clutch
996
438
774
436
758
724
760
302
756
446
436
991
995
Linkage
Park Pawl
906
908
908-1
906B
907
195
362
909
896
905
487
Interm. Servo
999
072
410
992
925 Accum. Assy.
326
010
940
431
741 V.B. Parts
420
740 Valve Body
425
300
765
779
000 P&R Kit
002 OHK Kit
004 Master L/Steels Kit
006 Master W/Steels Kit
011 Filter Kit
030 Bushing Kit
175 Ring Kit
400 Tech Manual

TOYOTA

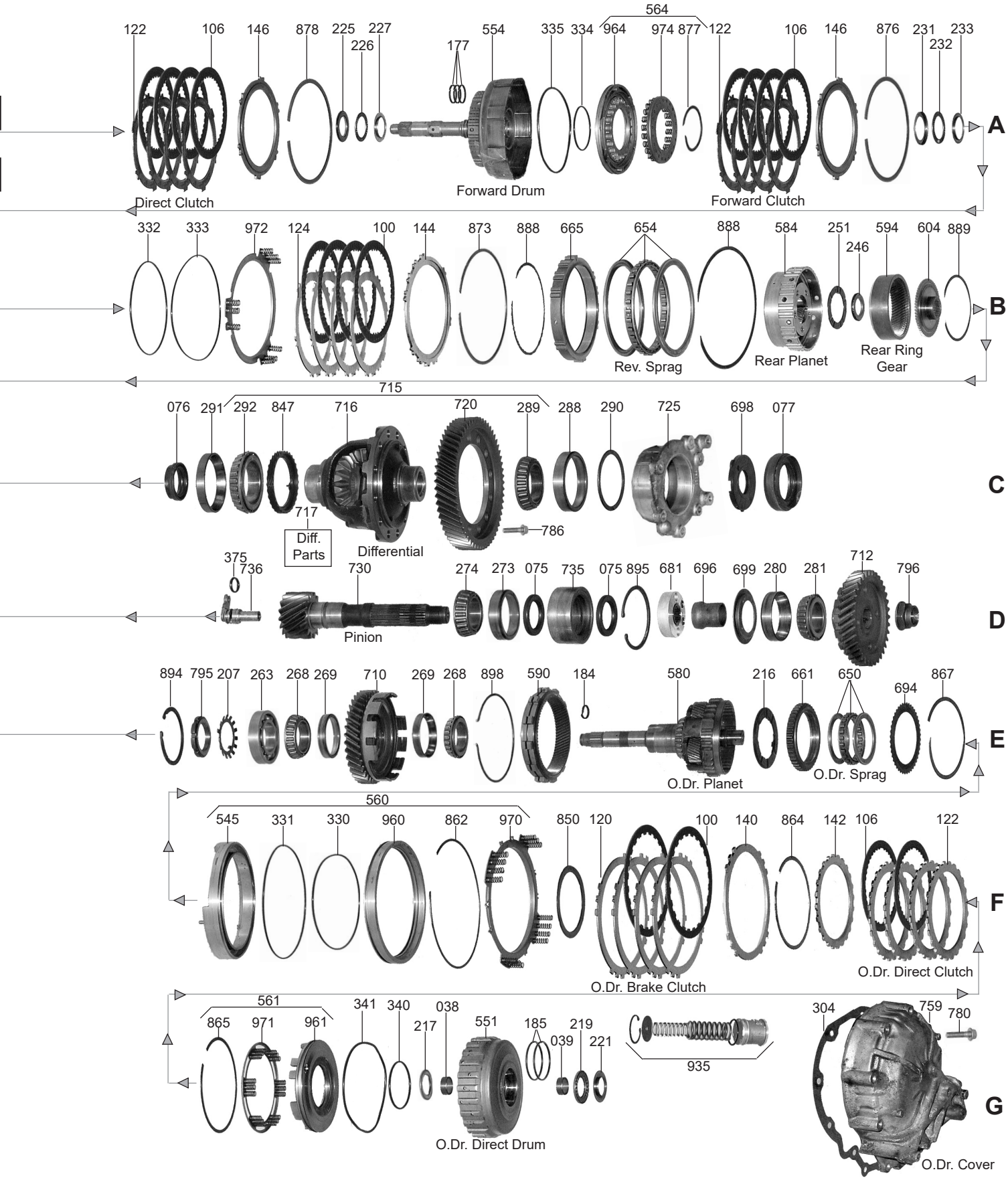

1-800-940-0197

© Whatever It Takes Transmission Parts. Inc.

PART #	PAPER & RUBBER KIT	QTY.	REFERENCE #
87000A	Paper & Rubber Kit, A540 1988-93	1	
87000AB	Paper & Rubber Kit, A540H (Camry AWD & RAV-4 4x4) 1989-Up	1	
87000B	Paper & Rubber Kit, A541E 1994-Up	1	

PART #	OVERHAUL KITS	QTY.	REFERENCE #
87002A	Overhaul Kit, A540E/A540H 1988-Up	1	
87002AB	Overhaul Kit, A540H (Camry AWD & RAV-4 4x4) 1989-Up	1	
87002B	Overhaul Kit, A541E 1994-Up	1	

PART #	MASTER L/STEEL KIT	QTY.	REFERENCE #
87004A	Master L/Steels Kit, A540E 1988-5/1991	1	
87004AA	Master L/Steels Kit, A540E 6/1991-1993	1	
87004AB	Master L/Steels Kit, A540H (Camry AWD & RAV-4 4x4) 1989-Up	1	
87004B	Master L/Steels Kit, A541E 1994-Up	1	

PART #	MASTER W/STEEL KIT	QTY.	REFERENCE #
87006A	Master W/Steels Kit, A540E 1988-5/1991	1	
87006AA	Master W/Steels Kit, A540E 6/1991-1993 (Also Fits Sienna 1998-00)	1	
87006AB	Master W/Steels Kit, A540H (Camry AWD & RAV-4 4x4) 1989-Up	1	
87006B	Master W/Steels Kit, A541E 1994-Up (Uses .063” Forward Steels) If Customer Needs .078” Forward Steels Sell 87122AB Also	1	

PART #	FILTER	QTY.	REFERENCE #
87010	Filter, A540E/A540H (Outlet Hole On Valve Body Side Is 1.015”ID x 1.165”ID) 1988-Up	1	
87010A	Filter, A541E (Outlet Hole On Valve Body Side Is 1.012”ID x 1.020”ID) 1994-96	1	

PART #	FILTER KIT	QTY.	REFERENCE #
87011	Filter Kit, A540E/A540H 1988-94	1	
87011A	Filter Kit, A541E 1994-96	1	

PART #	BANDS	QTY.	REFERENCE #
67022B	Band, A540 (1” Wide) Early	1	
87022	Band, A540E/A541E (1 1/4” Wide) 1994-Up	1	35810-32030
87022B	Band, A540E/A540H (1 1/2” Wide) 1988-93	1	

PART #	BUSHINGS	QTY.	REFERENCE #
87030	Bushing Kit, A540 1988-Up	1	
57034A	Bushing, A540 Pump Body (1.500”ID)(Brass With Oil Pockets) 1988-Up	1	
57036B	Bushing, A540 Stator Support (Front) 1988-Up	1	
67037A	Bushing, A540 Stator Support (Rear) Early	1	
87037A	Bearing, A540 Stator Support (Rear) Late (Use 87209)	1	
87209	Caged Needle Bearing, A540 Stator (Rear) Late	1	
87038A	Bushing, A540 Overdrive Direct Drum (Front)	1	
87039A	Bushing, A540 Overdrive Direct Drum (Rear)	1	
87046A	Bushing, A540 Direct Drum	1	
87050A	Bushing, A540 Input Hub	1	
87052A	Bushing, A540 Sun Gear	2	

PART #	METAL CLAD SEALS	QTY.	REFERENCE #
57070A	Seal, A540/A541E Front Pump 1988-Up	1	90311-38020
60072	Seal, A540 Manual Shaft	1	
87075A	Seal, A540/A541E Differential Pinion 1988-93	2	
87075AA	Seal, A540/A541E Differential Pinion 1994-Up (Double Lip)	1	
87076A	Seal, A540/A541E Axle (Bell Housing Side)(2.210”OD) 1988-Up	1	90311-40010
87077A	Seal, A540/A541E Left Axle (3.160”OD)(1.895”ID) 1988-Up	1	90311-50011
87077B	Use 67077D	1	
67077D	Seal, A540 Axle (Drivers Side) (AWD) 1988-Up	1	
57078A	Seal, A540/A541E Speedometer Gear Shaft 1988-Up	1	90310-09001

© Whatever It Takes Transmission Parts. Inc.

PART #	FRICTION CLUTCH	QTY.	REFERENCE #
97100	Friction, A540 Overdrive Brake Clutch (.081")(24 Teeth)(6.50"OD)(High Energy) 1992-Up	3	
87100A	Friction, A540 Overdrive Brake Clutch (.081") 24 Teeth (With Grooves)(6.50"OD) 1988-91	3	
87100AA	Friction, A540 Overdrive Brake Clutch (.081") 24 Teeth (Smooth)(6.50"OD) 1992-Up	3-5	
67100B	Friction, A540 Reverse Clutch (.059") 33 Teeth (5.60"OD)	6-7	35677-32060
87100B	Friction, A540 Reverse Clutch (.059") 36 Teeth (5.83"OD) Hi-Energy 1994-Up	6-7	
67100CA	Friction, A540 2nd Brake Clutch (.075") 33 Teeth (5.60"OD) 1988-91	3	
87100CB	Friction, A540 2nd Brake Clutch (.075") 33 Teeth (5.60"OD) 1992-Up	3	
87100CC	Friction, A540 2nd Brake Clutch (.075") 36 Teeth (5.83"OD) Hi-Energy 1994-Up	3	
87103A	Friction, A540 Differential Clutch (.071") 36 Teeth (4.50"OD) 1989-Up	11	41475-32020
67106A	Friction, A540 Forward & Direct Clutch (.067") 40 Teeth (4.975"OD)	3-7	35633-32050
87106A	Friction, A540 Forward Clutch (.060") 40 Teeth (5.00"OD) 1992-Up	5	
87106AB	Friction, A540 Direct Clutch (.081") 40 Teeth (5.200"OD) 9/1988-1991	3	
87106AC	Friction, A540 Direct Clutch (.083") 40 Teeth (5.20"OD) 1992-Up	3	
67106C	Friction, A540 Overdrive Direct Clutch (.075") 40 Teeth (4.975"OD) 1988	2	35633-32031
87119A	Friction Module, A540 1988-5/91	1	
87119AA	Friction Module, A540 6/91-93	1	
87119B	Friction Module, A540E 1994-04	1	

PART #	STEEL CLUTCH	QTY.	REFERENCE #
67120C	Steel, A540 Reverse Clutch (.071") 12 Teeth (4.60"ID) 1988-Up	5-8	
67120CA	Steel, A540 Reverse Clutch (.071") 5.60"ID (12 Teeth) Narrow Spline 1988-Up	5-8	
67120CB	Steel, A540 Overdrive Brake Clutch (.098") 5.60"ID (12 Teeth) 1988-Up	3	
67122A	Steel, A540 Forward Clutch (.071") 4.160"ID (8 Teeth) 1988-91	4	
87122A	Steel, A540 Forward Clutch (.063") 8 Teeth (4.145"ID) 1992-Up	4	
97122A	Steel, A540 Overdrive Direct Clutch (.118")(24 Teeth)(4.145"ID) 1989-93	AR	
87122AA	Steel, A540 Forward Clutch (.055") 8 Teeth (4.145"ID) 1992-Up	1-5	
87122AB	Steel, A541E Forward Clutch (.078") 8 Teeth (4.145"ID) 1994-Up (Some)	1-5	
87122AC	Steel, A540 Direct Clutch (.091") 6 Teeth (4.160"OD) 1988-91	2	
87122AD	Steel, A540 Direct Clutch (.071") 6 Notched Teeth (4.160"ID) 1988-91	1	
87122BA	Steel, A540 Direct Clutch (.055") 6 Teeth (4.160"ID) 1992-Up	1	
87122BB	Steel, A540 Direct Clutch (.079") 6 Teeth (3 Teeth Are Notched) 4.160"ID	2-3	
67122C	Steel, A540 Overdrive Direct Clutch (.071") 4.145"ID (20 Teeth) 1988	2	
87122CB	Steel, A541E Overdrive Direct Clutch (.071") 24 Teeth (4.145"ID) 1994-Up (Avalon)	2	
87123A	Steel, A540 Differential Clutch (.063") 3.60"ID (30 Teeth) 1988-Up	11	
87124A	Steel, A540 2nd Brake Clutch (.071") 12 Teeth (4.60"ID) 1988-Up	3	
87124B	Steel, A541E 2nd Brake Clutch (.071") 10 Teeth (4.86"ID) 1994-Up (Wide Splined)	4	35648-33010
87130AA	Steel, A541E Reverse Clutch (.063") 10 Teeth (4.86"ID) 1994-Up (Narrow Spline)	6	35648-33020
67130B	Steel, A540 Reverse Clutch (.071") 5.60"ID (12 Teeth) Narrow Spline 1988-Up	5-8	

PART #	CLUTCH PRESSURE PLATES	QTY.	REFERENCE #
87140	Pressure Plate, A540 Overdrive Brake Clutch (.148" Thick)	1	
87142	Pressure Plate, A540 Overdrive Direct Clutch (.140" Thick)	1	
87144	Pressure Plate, A540 2nd Brake Clutch (.135") 4.60"ID (12 Teeth) (Also Fits Reverse Clutch)	1-2	
87144A	Pressure Plate, A540 2nd Brake Clutch (.140") 4.60"ID (10 Teeth) (Also Fits Reverse Clutch)	1-2	
67146A	Pressure Plate, A540 Forward Clutch (3.30mm) 8 Teeth	1	
87146A	Pressure Plate, A540 Forward Clutch (2.7mm) 8 Teeth	1	
67146AA	Pressure Plate, A540 Forward Clutch (3.00mm) 8 Teeth	1	
67146AB	Pressure Plate, A540 Forward Clutch (2.80mm) 8 Teeth	1	
67146AC	Pressure Plate, A540 Forward Clutch (2.50mm) 8 Teeth	1	
87146B	Pressure Plate, A540 Direct Clutch (2.70mm) 6 Teeth	1	
67146B	Pressure Plate, A540 Forward & Direct Clutch (3.60mm) (8 Teeth)	1-2	
87146BA	Pressure Plate, A540 Direct Clutch (3.00mm) 6 Teeth	1	
67146BA	Pressure Plate, A540 Forward & Direct Clutch (3.83mm) (8 Teeth)	1-2	
87146BB	Pressure Plate, A540 Direct Clutch (3.40mm) 6 Teeth	1	
67146BB	Pressure Plate, A540 Forward & Direct Clutch (4.22mm) (8 Teeth)	1	
87150	Pressure Plate, A540 Reverse Clutch (.135") 4.60"ID (12 Teeth) (Use 87144)	1	
87150A	Pressure Plate, A540 Reverse Clutch (.140") 4.60"ID (10 Teeth) (Use 87144A)	1	

PART #	VALVE BODY KITS	QTY.	REFERENCE #
A87165E	Valve Body Kit, A540E (Translab)	1	

© Whatever It Takes Transmission Parts. Inc.

PART #	OIL SEALING RINGS	QTY.	REFERENCE #
87175A	Ring Kit, A540	1	
67177AT	Ring, A540 Forward Clutch (Teflon)	3	
67179A	Ring, A540 Direct Clutch (Metal)	2	
67184AT	Ring, A540 Intermediate Shaft (Teflon)	1	
67185CT	Ring, A540 Overdrive Direct Clutch (Teflon)	2	
87195AT	Ring, A540 2nd Coast Servo (Teflon)	1	

PART #	WASHERS & BEARINGS	QTY.	REFERENCE #
67207C	Lock Washer, A540 Under Nut	1	90209-40001
87209	Caged Needle Bearing, A540 Stator (Rear) Late	1	
67211AA	Washer, A540 Stator To Direct Drum	1	35616-32010
87216	Washer, A540 Overdrive Planet To Overdrive Drum	1	34737-3310
87217	Bearing W/Races, A540 Overdrive Planet To Overdrive Direct Drum	1	
67219CA	Bearing W/Race, A540 Overdrive Drum To Cover	1	90374-28013
67221C	Race, A540 Overdrive Drum To Case Cover (Rear)	1	35789-20020
67225A	Race, A540 Stator To Forward Drum (Front() (0.8mm) (Early)	1	35789-32020
67225AB	Race, A540 Stator To Forward Drum (Front) (1.4mm) (Early)	1	35789-32030
67226A	Bearing, A540 Stator To Forward Drum (Late)	1	90374-28005
87226	Bearing W/Race, A540 Stator To Forward Drum (Late)	1	90374-27004
67227A	Race, A540 Stator To Forward Drum (Rear) (Early)	1	35789-32010
87229	Washer, A540 Direct Drum To Forward Drum (.175” Thick) (Late)	1	35616-32030
67229A	Washer, A540 Direct Drum To Forward Drum (.138” Thick) (Early)	1	35616-32021
67231A	Race, A540 Forward Drum To Hub (.880”ID) (Early)	1	35789-32040
87231A	Race, A540 Forward Drum To Hub (1.235”ID) Late (Also Fits Forward Hub To Front Planet (Front)(Early)	1-2	35789-33010
87232	Bearing W/Races, A540 Forward Drum To Hub (Late)	1	90374-31001
67232A	Bearing, A540 Forward Drum To Hub (Early) (Also Fits Forward Hub To Front Planet (Early)	1-2	90374-22001
67233A	Race, A540 Forward Drum To Hub (Rear) (Early)	1	35789-32050
67234A	Race, A540 Forward Hub To Front Planet (Front) (Early) (Use 67231A)	1	
87235	Bearing W/Race, A540 Forward Hub To Planet (Late) (1.780”OD)(Two Piece Design) (Use With 87602A)	1	
87235A	Bearing W/Races, A540 Forward Hub To Planet (Late)(1.860”OD)(One Piece Design)(Used With 87602AA)	1	
67235A	Bearing, A540 Forward Hub To Front Planet (Early) (Use 67232A)	1	
67236A	Race, A540 Forward Hub To Front Planet (Rear) (Early)	1	35789-32060
67237A	Race, A540 Front Planet To Sun Gear (Early)	1	35789-32070
87238	Bearing W/Race, A540 Front Planet To Sun Gear (Late)	1	
67238A	Bearing, A540 Front Planet To Sun Gear (Early)	1	90374-30006
87241	Washer, A540 Sprag To Rear Planet (4 1/8”OD) 3 Tab (Plastic) (Late)	1	35789-32020
67241A	Washer, A540 Sprag To Rear Planet (2 3/8”OD) (Plastic) (Early) (Also Fits Rear Planet To Ring Gear (Early)	1-2	35738-12010
87241A	Washer, A540 Sprag To Rear Planet (4”OD) 3 Tab (Plastic)	1	
67244A	Washer, A540 Shell To Sprag (2 3/4”OD) (Plastic) (Early)	1	35739-32011
87244	Washer, A540 Shell To Sprag (.167”) (3 5/8”OD) (Plastic) 1988-93	1	
87244A	Washer, A541 Shell To Sprag (.203”) 3 5/8”OD (Plastic) 1994-Up	1	
67246A	Race, A540 Sun Gear To Rear Ring Gear (Early)	1	35789-22010
87247	Bearing W/Races, A540 Sun Gear To Rear Ring Gear Hub (1 Piece)	1	90374-22002
67247A	Bearing, A540 Sun Gear To Rear Support (Rear) (Early)	1	90374-24002
67248A	Race, A540 Sun Gear To Rear Support (Rear) (Early)	1	35789-32080
67251A	Washer, A540 Rear Planet To Ring Gear (Tabs Are In The Center ID Of Washer & Are Straight Across From Each Other) (Plastic) (Early) (Use 67241A)	1	
87251A	Washer, A540 Rear Planet To Ring Gear (Plastic) (Late) (Tabs Are Not In The Center ID Of The Washer)	1	
87263	Ball Bearing, A540 Case To Intermediate Shaft	1	
87268	Bearing W/Cup Race, A540 Drive Transfer Gear To Shaft	1	
87274B	Cone Bearing W/Cup Race, A540 Pinion (With 18 Rollers)(V6)	1	90366-36003
87280	Cup Race, A540 Driven Transfer Gear (3.300”OD)	1	
87280A	Cup Race, A540 Driven Transfer Gear (3.068”OD)	1	
87281	Cone Bearing, A540 Driven Transfer Gear (Uses Cup Race #280 That Is 3.300”OD)	1	
87281K	Cone Bearing W/Cup Race, A540 Driven Transfer Gear (Cup Race Is 3.300”OD With Cast # 30208J-2-N)	1	
87281A	Cone Bearing, A540 Driven Transfer Gear (Uses Cup Race #280 That Is 3.068”OD)	1	
87281AK	Cone Bearing W/Cup Race, A540 Driven Transfer Gear (Cup Race Is 3.068”OD With Cast # ST4078-3)	1	
87289	Tapered Bearing, A540 Differential (Ring Gear Side) 1989	1	90366-50030
87292	Tapered Bearing, A540 Differential (Speed-O Gear Side) 1989	1	90366-57020

TOYOTA

© Whatever It Takes Transmission Parts. Inc.

PART #	GASKETS & RUBBER COMPONENTS	QTY.	REFERENCE #
87300	Gasket, A540 Bottom Pan	1	81170A
87300E	Gasket, A541E Bottom Pan 1994-Up	1	35168-33010
87302	Gasket, A540 Top Cover	1	
87304	Gasket, A540E/A540H Overdrive Cover (13 Bolt) 1988-Up	1	34112-32040
87304A	Gasket, A541E Overdrive Cover (12 Bolt) 1994-Up	1	
67311B	O-Ring, A540 Pump	1	
87326	Gasket, A540 Filter	1	

PART #	TECHNICAL MANUALS	QTY.	REFERENCE #
87400	Technical Manual, A540 Toyota	1	83-TOY540TM
87401	Technical Manual On CD, A540 Toyota	1	

PART #	ELECTRICAL COMPONENTS	QTY.	REFERENCE #
87410B	Neutral Switch, A540 (The Connector Is 1 1/8” Wide)(Early)	1	
87410C	Neutral Switch, A540 (The Connector Is 1 3/4” Wide)(Late)	1	
87420	Solenoid Assembly, A540 1-2 Shift (2 Solenoids & 1 Bracket) 1988-02 (Rostra)	1	52-0222
87420K	Solenoid Kit, A540E/A540H (2 Shift & 1 Lock-Up) 1988-02	1	52-9003
87420A	Solenoid Assembly, A541E 1-2 Shift (2 Solenoids & 1 Bracket) 1994-04 (Rostra)	1	52-0234
87420AK	Solenoid Kit, A541E (2 Shift & 1 Lock-Up) 1994-04	1	
87425	Solenoid, A540 Lock-Up 1988-02 (Rostra)(Do Not Use On A541 Transmission)	1	
87425E	Solenoid, A541E Lock-Up 1994-04	1	
84731B	Solenoid, A541E Linear (On Top Of Valve Body)(1 Wire Connector)	1	
87436	Speed Sensor, A540 (#2 Speed Sensor)	1	90374-30004
87438B	Sensor, A540 Pulse Generator (On Top Cover)	1	
87444B	Case Connector, A540 (.950”OD) 4x4	1	
87444C	Case Connector, A540 (1.015”OD) Late	1	

PART #	HARD PARTS	QTY.	REFERENCE #
87510A	Pump Body W/Gears, A540 (8 7/16”OD) (.420” Thick Gears)	1	
87510B	Pump Body W/Gears, A540 (8 5/16”OD) (.370” Thick Gears) Can Use 87510BA	1	
67510BA	Pump Body W/Gears A540 (Fits Stator With Bushing Inside Rear) Early	1	
87510BA	Pump Body W/Gears, A540 (8 5/16”OD) (.420” Thick Gears) Can Use 87510B	1	
87520	Stator, A540 Fits Body With 8 5/16”OD (Has Bearing Inside Rear)	1	
67520A	Stator, A540 (Has Bushing Inside Rear) Early	1	
87520A	Stator, A540 Fits Body With 8 7/16”OD (Has Bearing Inside Rear)	1	
87545	Housing, A540 Overdrive Brake Clutch	1	
87551A	Drum, A540 Overdrive Direct (22 Teeth Sun Gear)	1	
87551B	Drum, A540 Overdrive Direct (23 Teeth Sun Gear)	1	
87551C	Drum, A540 Overdrive Direct (17 Teeth Sun Gear)	1	
87551D	Drum, A540 Overdrive Direct (28 Teeth Sun Gear)	1	
87551E	Drum, A540 Overdrive Direct (27 Teeth Sun Gear)	1	
87554	Drum, A540 Forward With Shaft (3 Ring) 4 Clutch (Late) (.900” Tall Outer Lugs Where The Steels Teeth Sets)	1	
87554A	Drum, A540 Forward With Shaft (3 Ring) 5 Clutch (Late) (.950” Tall Outer Lugs Where The Steels Teeth Sets) (Uses .060” Steels)	1	
87554B	Drum, A540 Forward With Shaft (3 Ring) 5 Clutch (Late) (1.070” Tall Outer Lugs Where The Steels Teeth Sets) (Uses .080” Steels)	1	
67554C	Drum, A540 Forward With Shaft (2 Ring) 4 Clutch (Early)	1	
67554CA	Drum, A540 Forward With Shaft (3 Ring) 4 Clutch	1	
87555	Drum, A540 Direct (3 Clutch) Uses 1 1/4” Wide Band (8 Drive Lugs) 1994-Up	1	
87555B	Drum, A540 Direct Clutch (Uses 1 1/2” Wide Band)(16 Drive Lugs) 1988-93	1	
67555CA	Drum, A540 Direct (3 Clutch) Uses 1” Wide Band (8 Drive Lugs At Connector Shell) Early	1	
67555CB	Drum, A540 Direct (3 Clutch) Use 1” Wide Band (1 7/8”ID Bushing) Piston Is .417” Thick 2/1984-Up	1	
87560	Piston Kit, A540 Overdrive Brake (Piston # 960 Is .500” Thick)	1	
87560A	Piston Kit, A540 Overdrive Brake (Piston # 960 Is .600” Thick)	1	
87561	Piston Kit, A540 Overdrive Direct Drum (Uses One Return Spring)	1	
87561A	Piston Kit, A540 Overdrive Direct Drum (Uses Multiple Springs) .780” Thick Piston	1	
87561B	Piston Kit, A540 Overdrive Direct Drum (Uses Multiple Springs) .825” Thick Piston	1	
87562	Piston Kit, A540 2nd Brake Assembly (9 Springs)	1	
67562B	Piston Kit, A540 2nd Brake Assembly (12 Springs)	1	
67564BA	Piston Kit, A540 Forward Drum (Early)	1	
87564	Piston Kit, A540 Forward Drum (Late)	1	
87565	Piston Kit, A540 Direct Drum (Late)	1	
67565CA	Piston Kit, A540 Direct Drum (Early)	1	

© Whatever It Takes Transmission Parts. Inc.

PART #	HARD PARTS (Continued)	QTY.	REFERENCE #
87566	Piston Kit, A540 Reverse Clutch	1	
87580A	Planet, A540 Overdrive With Shaft (22 Teeth Sun Gear #551) 9 3/16" Tall	1	
87580AA	Planet, A540 Overdrive With Shaft (22 Teeth Sun Gear #551) 9 1/2" Tall	1	
87580B	Planet, A540 Overdrive With Shaft (23 Teeth Sun Gear #551)	1	
87580C	Planet, A540 Overdrive With Shaft (17 Teeth Sun Gear #551)	1	
87580D	Planet, A540 Overdrive With Shaft (28 Teeth Sun Gear #551)	1	
87582	Planet, A540 Front (Has Hub On Front) Late	1	
67582A	Planet, A540 Front (Early)	1	
87584	Planet, A540 Rear (1.885" Overall Height) 4 Gear	1	
67584A	Planet, A540 Rear (1.790" Overall Height) 4 Gear (Early)	1	
87584A	Planet, A540 Rear (1.885" Overall Height) 5 Gear (11 Lugs)	1	
87584B	Planet, A540 Rear (1.810" Overall Height) 5 Gear (12 Lugs)	1	
87590A	Ring Gear, A540 Overdrive (22 Teeth & 23 Teeth Sun Gear)	1	
87590C	Ring Gear, A540 Overdrive (17 Teeth Sun Gear)	1	
87590D	Ring Gear, A540 Overdrive (28 Teeth Sun Gear)	1	
87592	Ring Gear, A540 Front (1.615" Thick)	1	
87592A	Ring Gear, A540 Front (1.555" Thick)	1	
87592B	Ring Gear, A540 Front (1.665" Thick)	1	
87592C	Ring Gear, A540 Front (1.808" Thick)	1	
67594	Ring Gear, A540 Rear (1.100" Thick) Early	1	
87594	Ring Gear, A540 Rear (1.165" Thick) Late	1	
87602	Hub, A540 Front Planet (.375" Thick From Bearing To Bearing Surface)	1	
87602A	Hub, A540 Front Planet (.495" Thick From Bearing To Bearing Surface)	1	
87602AA	Hub, A540 Front Planet (.470" Thick From Bearing To Bearing Surface)	1	
87604	Hub, A540 Rear Planet (.628" Spline Length)	1	
87612	Sun Gear, A540 (2 3/4" Long) 27 Teeth (1.540"OD Sprag Race) Late	1	
67612B	Sun Gear, A540 (27 Teeth) (1.465"OD Sprag Race) Early	1	35706-32012
87622	Shell, A540 Input Sun (42 Inner Teeth) 8 Drive Lugs	1	
67622A	Shell, A540 Input Sun (39 Inner Teeth) 8 Drive Lugs	1	
87622A	Shell, A540 Input Sun (42 Inner Teeth) 16 Drive Lugs	1	

PART #	SPRAGS & ONE WAY CLUTCHES	QTY.	REFERENCE #
87642	Sprag Assembly, A540 (4 1/2"OD) 1.540"OD Of Sun Gear #87612	1	35790-32031
87642A	Sprag Assembly, A540 Intermediate (4 3/4"OD)(1.540"OD Of Sun Gear #87612) 1994-03	1	
67642B	Sprag Assembly, A540 (1.645"ID) Early	1	3570-32050
97650	Sprag, A540 Overdrive (24 Lugs)(.450" Wide)	1	
67650C	Sprag, A540 Overdrive Sprag	1	
87652	Sprag Assembly, A541E Intermediate (4 3/4"OD)(1.540"OD Of The Sun Gear #87612) 1994-03	1	
87654	Sprag, A540 Reverse Sprag (30 Elements) 4.810"OD 1988-00	1	
67654A	Sprag, A540 Reverse Sprag (20 Elements) 4.810"OD	1	
87654A	Sprag, A540 Reverse Sprag (32 Elements) 5.050"OD	1	
87661	Outer Race, A540 Overdrive Sprag	1	
87665	Outer Race, A540 Reverse Sprag (5.065"ID)	1	
67665A	Outer Race, A540 Reverse Sprag (4.820"ID)	1	35795-32012
87681A	Reluctor, A540	1	

PART #	HARD PARTS (Continued)	QTY.	REFERENCE #
87694	Retaining Plate, A540 On Top Of Overdrive Sprag	1	
87696	Crush Sleeve, A540 (.940" Long) 4/1998-12/1998	1	41231-32020
87696A	Crush Sleeve, A540 (1.650" Long)	1	41231-33010
87696B	Crush Sleeve, A540 (1.510" Long)	1	
87698	Oil Baffle, A540 Between Differential Retainer & Axle Seal	1	
87699	Oil Slinger, A540 (3 1/4"OD)	1	
87699A	Oil Slinger, A540 (3"OD)	1	
87710	Gear, A540 Counter Drive (36 Teeth)	1	
87710B	Gear, A540 Counter Drive (37 Teeth)	1	
87712	Gear, A540 Transfer Driven (37 Teeth)	1	
87712B	Gear, A540 Transfer Driven (35 Teeth)	1	
87715	Differential Assembly, A540 (58 Teeth) 3 Groove (29 Teeth Yellow Speed-O Gear)	1	
87715A	Differential Assembly, A540 (58 Teeth) 4 Groove (29 Teeth Yellow Speed-O Gear)	1	
87715B	Differential Assembly, A540 (58 Teeth) 3 Groove (30 Teeth Blue Speed-O Gear)	1	
87715BA	Differential Assembly, A540 (58 Teeth) 4 Groove (30 Teeth Blue Speed-O Gear)	1	
87715C	Differential Assembly, A540 (58 Teeth) 3 Groove (30 Teeth Black Speed-O Gear)	1	
87715CA	Differential Assembly, A540 (58 Teeth) 1 Groove (No Speed-O Gear)	1	
87715D	Differential Assembly, A540 (59 Teeth) 2 Groove (30 Teeth Black Speed-O Gear)	1	
87715DB	Differential Assembly, A540 (59 Teeth) 4 Groove (30 Teeth Blue Speed-O Gear)	1	

© Whatever It Takes Transmission Parts. Inc.

87715E	Differential Assembly, A540 (60 Teeth) 2 Groove (4x4)	1	
87716	Differential Housing, A540	1	
87719E	Sleeve, A540 Differential Sealing Ring (Aluminum) 4x4	1	
87720	Ring Gear, A540 (58 Teeth) 3 Groove	1	
87720A	Ring Gear, A540 (58 Teeth) 4 Groove	1	
87720C	Ring Gear, A540 (58 Teeth) 1 Groove	1	
87720D	Ring Gear, A540 (59 Teeth) 2 Groove	1	
87720E	Ring Gear, A540 (60 Teeth) 2 Groove	1	
87724	Retainer, A540 Differential Bearing (Front) 6 Bolt	1	
87724A	Retainer, A540 Differential Bearing (Front) 5 Bolt	1	
87725	Retainer, A540 Differential Bearing (Rear) With 1 Dowel Pin (Cast # 45010)	1	
87725A	Retainer, A540 Differential Bearing (Rear) With 1 Dowel Pin (Cast # 33050)	1	
87725B	Retainer, A540 Differential Bearing (Rear) With 2 Dowel Pins (Cast # 33010)	1	
87725BA	Retainer, A540 Differential Bearing (Rear) With 1 Dowel Pin (Cast # 33020)	1	
87730	Pinion, A540 (16 Teeth) 3 Groove Next To End (1.500” Wide Gear)	1	
87730A	Pinion, A540 (17 Teeth) 3 Groove	1	
87730B	Pinion, A540 (15 Teeth) 3 Groove, One Next To Bearing	1	
87730BA	Pinion, A540 (15 Teeth) 2 Grooves Next To Bearing	1	
87730C	Pinion, A540 (15 Teeth) 4 Groove (1.530” Gear Length)	1	
87730CA	Pinion, A540 (15 Teeth) 4 Groove (1.380” Gear Length)	1	
87730D	Pinion, A540 (16 Teeth) 1 Groove Next To Bearing	1	
87730E	Pinion, A540 (14 Teeth) 2 Groove (1.500” Gear Length)	1	
87730EA	Pinion, A540 (14 Teeth) 2 Groove (1.405” Gear Length)	1	
87730F	Pinion, A540 (16 Teeth) 3 Grooves Next To End (1.350” Wide Gear)	1	41211-32061
87735	Pinion Retainer, A540 (Aluminum) 2.750”OD (With 1 O-Ring)	1	
87735A	Pinion Retainer, A540 (Steel) 2.750”OD (With 1 O-Ring)	1	
87735B	Pinion Retainer, A540 (Steel) 2.920”OD (With No O-Ring)	1	
87735BA	Pinion Retainer, A540 (Steel) 2.920”OD (With 2 O-Ring)	1	
87735C	Pinion Retainer, A540 (Steel) 2.920”OD (No Seal) (No O-Rings)	1	
87736A	Pinion Center, A540 (Aluminum) 1 Bolt (.820”OD)	1	
67736B	Pinion Center, A540 (Aluminum) 1 Bolt (1.020”OD)	1	
87740	Valve Body, A540 (3 Solenoids) No Lube Tube For Differential 1988-91	1	
87740A	Valve Body, A540 (3 Solenoids, 2 Are Upright & 1 Is Lateral) 1992-93 (With Long Tube For The Differential)	1	
87740AA	Valve Body, A540 (3 Solenoids, 2 Are Upright & 1 Is Lateral) (With Short Lube Tube For The Differential) (Cast # A540X)		
87740B	Valve Body, A541E (4 Solenoids, 3 Are Upright & 1 Is Lateral)	1	
87740C	Valve Body, A540 (4 Solenoids, 2 Are Upright & 2 Are Lateral)	1	

PART #	VALVE BODY COMPONENTS	QTY.	REFERENCE #
S87741AT-2	Sleeve, A540 TV Boost Valve (Small Ratio) (Sonnax) (1.77” Long Sleeve)	1	
S87741ATK	Valve & Sleeve Kit, A540 TV Boost (Small Ratio) (Sonnax) (1.77”Long Sleeve)	1	
S87741T-2	Sleeve, A540 TV Boost Valve (Large Ratio) (Sonnax) (1.81”Long Sleeve)	1	
S87741TK	Valve & Sleeve Kit, A540 TV Boost (Large Ratio) (Sonnax) (1.81”Long Sleeve)	1	89031-01K
S87741TTK	Valve & Sleeve Kit, A540 TV Boost (Large Ratio) (Sonnax) (1.57”Long Sleeve)	1	

PART #	HARD PARTS (Continued)	QTY.	REFERENCE #
87756	Top Cover, A540 (Aluminum) No Vent	1	
87756A	Top Cover, A540 (Aluminum) With Vent	1	
87756B	Top Cover, A540 (Aluminum) With 2 Vents (4x4)	1	
87756C	Top Cover, A540 (Aluminum) With Vent & Speed Sensor Type	1	
87758	Differential Cover, A540 (11 Bolt Holes) No Lube Hole 1987-91	1	
87758A	Differential Cover, A540 (11 Bolt Holes) With 1 Lube Hole 1992-Up	1	
87758AB	Differential Cover, A540 (11 Bolt Holes) 4x4	1	
87758B	Differential Cover, A540 (10 Bolt Holes)	1	
87758BA	Differential Cover, A540 (10 Bolt Holes) With Speed Sensor Hole (With Lube Tube Inside)	1	
87759	Rear Cover, A540 Overdrive (13 Bolts) No Mounting Holes	1	
87759K	Overdrive Assembly, A540 (Contains: #795 To #759) 13 Bolt Rear Cover With No Mounting Holes	1	
87759A	Rear Cover, A540 Overdrive (13 Bolts) With 2 Mounting Holes	1	
87759B	Rear Cover, A540 Overdrive (13 Bolts) With 4 Mounting Holes	1	
87759BK	Overdrive Assembly, A540 (Contains: #795 To #759) 13 Bolt Rear Cover With 4 Mounting Holes	1	
87759C	Rear Cover, A540 Overdrive (12 Bolts) No Mounting Holes	1	
87759CA	Rear Cover, A540 Overdrive (12 Bolts) With 4 Mounting Holes	1	
87759CAK	Overdrive Assembly, A540 (Contains: #795 To #759) 12 Bolt Rear Cover With 4 Mounting Holes	1	

© Whatever It Takes Transmission Parts. Inc.

PART #	HARD PARTS (Continued)	QTY.	REFERENCE #
87760	Case, A540 Open Starter Hole (13 Bolt Overdrive Cover) Case Has A Tin Vent Cover Above Differential 1987-91	1	
87760A	Case, A540 Open Starter Hole (12 Bolt Overdrive Cover) Has A Cooler Line Above Differential Instead Of Vent (Has A Lube Hole From Case To Differential Cover, Between Two Bolt Holes) 1992-Up	1	
87760AA	Case, A540 Open Starter Hole (12 Bolt Overdrive Cover) Has A Vent On Top Cover With Speed Sensor (Has A Lube Hole From Case To Differential Cover, Between Two Bolt Holes) 1987-91	1	
87760B	Case, A540 Open Starter Hole (13 Bolt Overdrive Cover) Has A Cooler Line Above Differential Instead Of A Vent (Has A Lube Hole From Case To Differential Cover, Between Two Bolt Holes) 1992-Up	1	
87760C	Case, A540 Open Starter Hole (13 Bolt Overdrive Cover) Has A Line Above Differential Going To Vent On Top Cover (Has A Lube Hole From Case To Differential Cover, Between Two Bolt Holes) 2WD	1	
87760D	Case, A540 Open Starter Hole (13 Bolt Overdrive Cover) Has A Line Above Differential Going To A Vent On Top Cover (AWD)	1	
87765	Pan, A540 Bottom	1	
87765E	Pan, A541E Bottom	1	
57775	Bolt, A540 Converter (8 x 1.25mm)	AR	
67775	Bolt, A540 Converter (9 x 1.25mm)	AR	
87777K	Bolt Set, A540 Holds Pump To Case	1	
87778K	Bolt Set, A540 Pump Stator To Body	1	
87782K	Bolt Set, A540 Valve Body To Case	1	
87785K	Bolt Set, A540 Differential Cover To Case	1	
87793K	Bolt Set, A540 Rear Differential Retainer To Case	1	
87794K	Bolt Set, A540 Differential Retainer To Case (Front)	1	
87795	Nut, A540 Holds Drive Gear To Overdrive Planet	1	
87796	Nut, A540 Pinion Shaft	1	
87838A	Axle Flange, A540 Short Shaft (6 Bolt)	1	
87850	Cushion Steel, A540 Overdrive Brake	1	
87862	Snap Ring, A540 Holds Overdrive Brake Retainer To Cover	1	
87864	Snap Ring, A540 Holds Overdrive Direct Pressure Plate In Drum	1	
87865	Snap Ring, A540 Holds Overdrive Direct Retainer In	1	
87867	Snap Ring, A540 Holds Overdrive Sprag In Overdrive Planet	1	
87873	Snap Ring, A540 Holds Sprag Outer Race To Case	1	
67876A	Snap Ring, A540 Holds Forward Pressure Plate In	1	
87877	Snap Ring, A540 Holds Forward Retainer In	1	
87878	Snap Ring, A540 Holds Direct Pressure Plate In Drum (5 9/16”OD)	1	
87879	Snap Ring, A540 Holds Direct Retainer In	1	
67882A	Snap Ring, A540 Front Planet Hub To Ring Gear	1	
87883	Snap Ring, A540 Holds 2nd Housing In Case (5 7/8” OD)	1	
87883A	Snap Ring, A540 Holds 2nd Housing In Case (6 1/8” OD)	1	
87884	Snap Ring, A540 Sun Gear To Bowl (Rear) 2.00”OD	1	
87888	Snap Ring, A540 Holds Sprag In Outer Race (5.350”OD)	2	
87889	Snap Ring, A540 Holds Rear Ring Gear To Hub	1	
87892	Snap Ring, A540 Holds Low/Reverse Pressure Plate In	1	
87893	Snap Ring, A540 Holds Reverse Clutch Retainer In	1	
87894	Snap Ring, A540 Stop For Bearing #263	1	
87895	Snap Ring, A540 Holds Pinion Retainer In Case	1	
87896	Snap Ring, A540 Holds Servo In	1	
87897	Snap Ring, A540 Stop For Cup Race #281 (Late Only)	1	
87898	Snap Ring, A540 Holds Overdrive Ring Gear To Drive Gear	1	
87905	Servo Assembly, A540 (2.235”OD Of Piston)	1	
87905A	Servo Assembly, A540 (1.905”OD Of Piston)	1	
87906	Spring, A540 Servo Return	1	
87907	Piston, A540 Servo (2.235”OD)	1	
87907A	Piston, A540 Servo (1.905”OD)	1	
87909	Cover, A540 Intermediate Servo (2.295”OD) 1988-93	1	
87909A	Cover, A540 Intermediate Servo (1.965”OD) 1994-Up	1	
87925	Accumulator Assembly, A540 (13 Hole Cover)	1	
87925A	Accumulator Assembly, A540 (12 Hole Cover)	1	
87956	Housing, A540 2nd Brake Clutch	1	
87960	Piston, A540 Overdrive Direct Clutch	1	
87961	Piston, A540 Overdrive Brake Clutch	1	
87962	Piston, A540 2nd Brake Clutch	1	
87964	Piston, A540 Forward Clutch	1	
87965	Piston, A540 Direct Clutch	1	
87966	Piston, A540 Reverse Clutch	1	

TOYOTA

© Whatever It Takes Transmission Parts. Inc.

87970	Retainer W/Spring, A540 Overdrive Direct Clutch	1
87971	Retainer W/Spring, A540 Overdrive Brake	1
87972	Retainer W/Spring, A540 2nd Clutch	1
87974	Retainer W/Spring, A540 Forward Clutch	1
87975	Retainer W/Spring, A540 Direct Clutch	1
87976	Retainer W/Spring, A540 Reverse Clutch	1
87991	Linkage Assembly, A540 (Internal) Early	1
87991C	Linkage Assembly, A540 (Internal) Late	1
87995A	Park Pawl, A540 (3 Pieces)(Early)	1
87995C	Park Pawl, A540 (4 Pieces)(Late)	1
87996	Fitting, A540 Cooler Line	2
87999	Tube Assembly, A540 For Valve Body (Early)	1
87999B	Tube Assembly, A540 For Valve Body (8 Tubes) 4x4	1
87999C	Tube Assembly, A540 For Valve Body (7 Tubes) (Late)	1

© Whatever It Takes Transmission Parts. Inc.

PART #	PAPER & RUBBER KIT	QTY.	REFERENCE #
157000	Paper & Rubber Kit, A55 1979-Up	1	

PART #	OVERHAUL KITS	QTY.	REFERENCE #
157002	Overhaul Kit, A55 1979-Up	1	

PART #	MASTER L/STEEL KIT	QTY.	REFERENCE #
157004	Master L/Steels Kit, A55 1979-Up	1	

PART #	MASTER W/STEEL KIT	QTY.	REFERENCE #
157006	Master W/Steels Kit, A55 1979-Up	1	

PART #	FILTER	QTY.	REFERENCE #
157010	Filter, A55 (Tercel) 2WD	1	35303-16020
157010A	Filter, A55 (Tercel) 4x4	1	35303-16030

PART #	FILTER KIT	QTY.	REFERENCE #
157011	Filter Kit, A55 2WD	1	
157011A	Filter Kit, A55 4x4	1	

PART #	BUSHINGS	QTY.	REFERENCE #
157030	Bushing Kit, A55	1	

PART #	METAL CLAD SEALS	QTY.	REFERENCE #
57070A	Seal, A55 Front Pump	1	
149072	Seal, A55 Manual Lever Shaft	1	
148072T	Seal, A55 Throttle Valve Lever	1	
157074	Seal, A55 Extension Housing	1	
157076	Seal, A55 Axle (Left & Right)	2	
157078	Seal, A55 Speed-O Gear Shaft	1	
157079	Seal, A55 Governor Pressure Adapter	2	9030-23001

PART #	FRICTION CLUTCH	QTY.	REFERENCE #
57102AA	Friction, A55 Forward/Direct (#1 Brake/ #2 Brake) .093”	7-8	35677-22030
57102AB	Friction, A55 Forward/Direct (#1 Brake/ #2 Brake) .093” (Waved)	1	
67102D	Friction, A55 Forward/Direct .070”	6-7	35634-22070
57114A	Friction, A55 #3 Brake .092”	4	35677-33030
67114AB	Friction, A55 #3 Brake .092” (Waved)	1	

PART #	STEEL CLUTCH	QTY.	REFERENCE #
57124AA	Steel, A55 #1 Brake / #2 Brake .070”	4	35634-22090
57134A	Steel, A55 #3 Brake .070”	5	35634-22080

PART #	OIL SEALING RINGS	QTY.	REFERENCE #
157175	Ring Kit, A55 1979-Up	1	
157177	Ring, A55 Turbine Shaft 1979-Up	1	35712-16010
12178A	Ring, A55 Sun Gear	2-3	35749-22010
157179	Ring, A55 Center Support (Direct Clutch) 1979-82 & Forward Clutch 1979-Up	2-5	35617-22020
157179A	Ring, A55 Center Support (Direct Clutch) 1983-Up (Use 57181AA)	3	35617-16010
157181	Ring, A55 Front Clutch (Forward Clutch) Use 157179	2	35617-16010
57181AA	Ring, A55 Center Support (Direct Clutch) 1983-Up	3	35617-16010
57182A	Ring, A55 Sun Gear (Use 12178A)	2-3	35749-22010
157189	Ring, A55 Governor 1979-Up	3	35746-16010

PART #	GASKETS & RUBBER COMPONENTS	QTY.	REFERENCE #
157300	Gasket, A55 Bottom Pan	1	
157311	O-Ring, A55 Front Pump	1	
157326	Gasket, A55 Filter	1	

© Whatever It Takes Transmission Parts. Inc.

PART #	TECHNICAL MANUALS	QTY.	REFERENCE #
157400	Technical Manual, A55	1	83-TOY55TM

PART #	HARD PARTS	QTY.	REFERENCE #
157582	Planet, A55 Front	1	
157592	Ring Gear, A55 Front Planet	1	

PART #	SPRAGS & ONE WAY CLUTCHES	QTY.	REFERENCE #
157652	Sprag, A55 Intermediate (12 Elements)	1	

PART #	HARD PARTS (Continued)	QTY.	REFERENCE #
157700	Chain, A55	1	

© Whatever It Takes Transmission Parts. Inc.

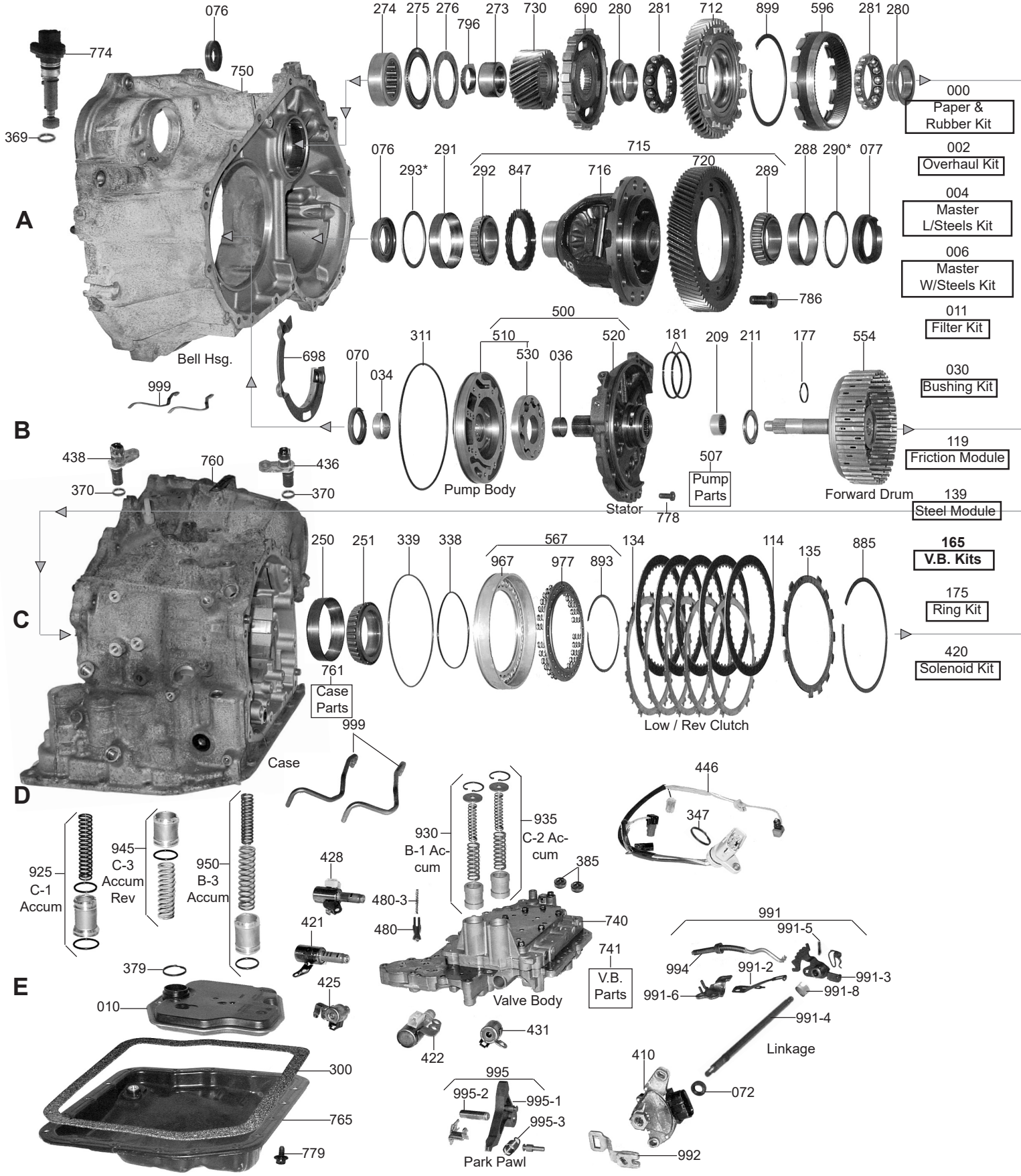

© Whatever It Takes Transmission Parts. Inc.

U140 / U240 / U241 / (U250 2003-04)

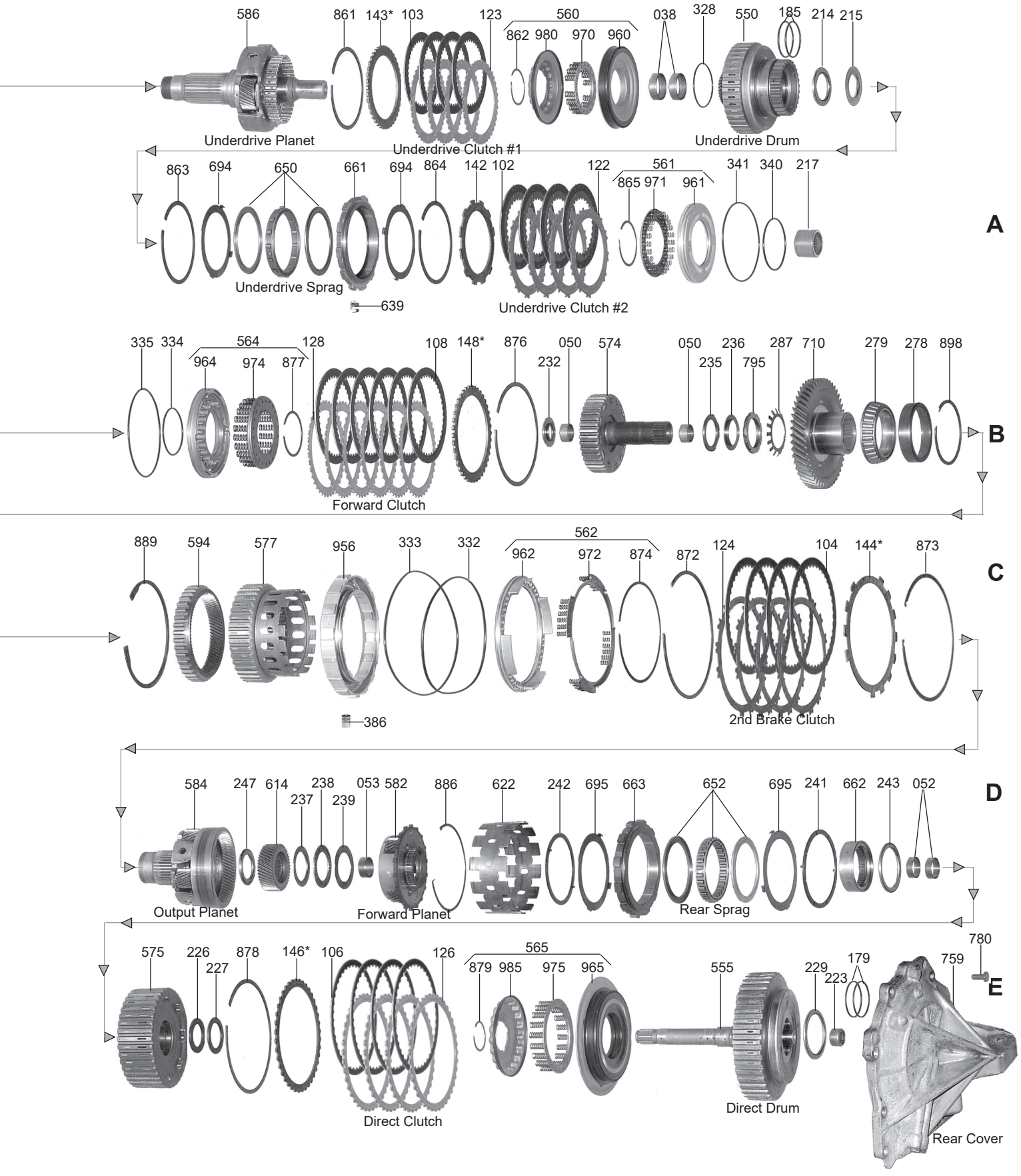

TOYOTA

1-800-940-0197

© Whatever It Takes Transmission Parts. Inc.

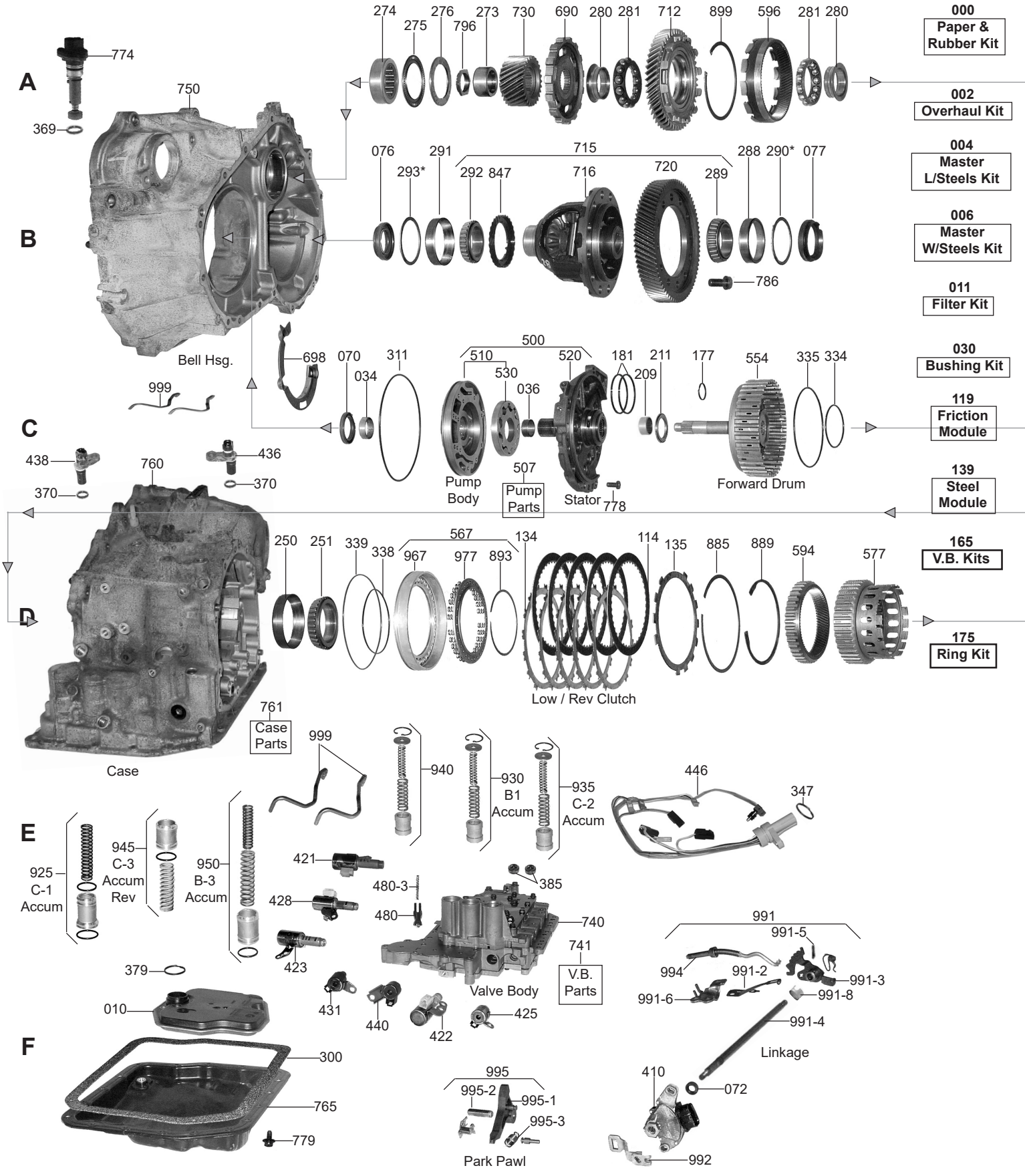

© Whatever It Takes Transmission Parts. Inc.

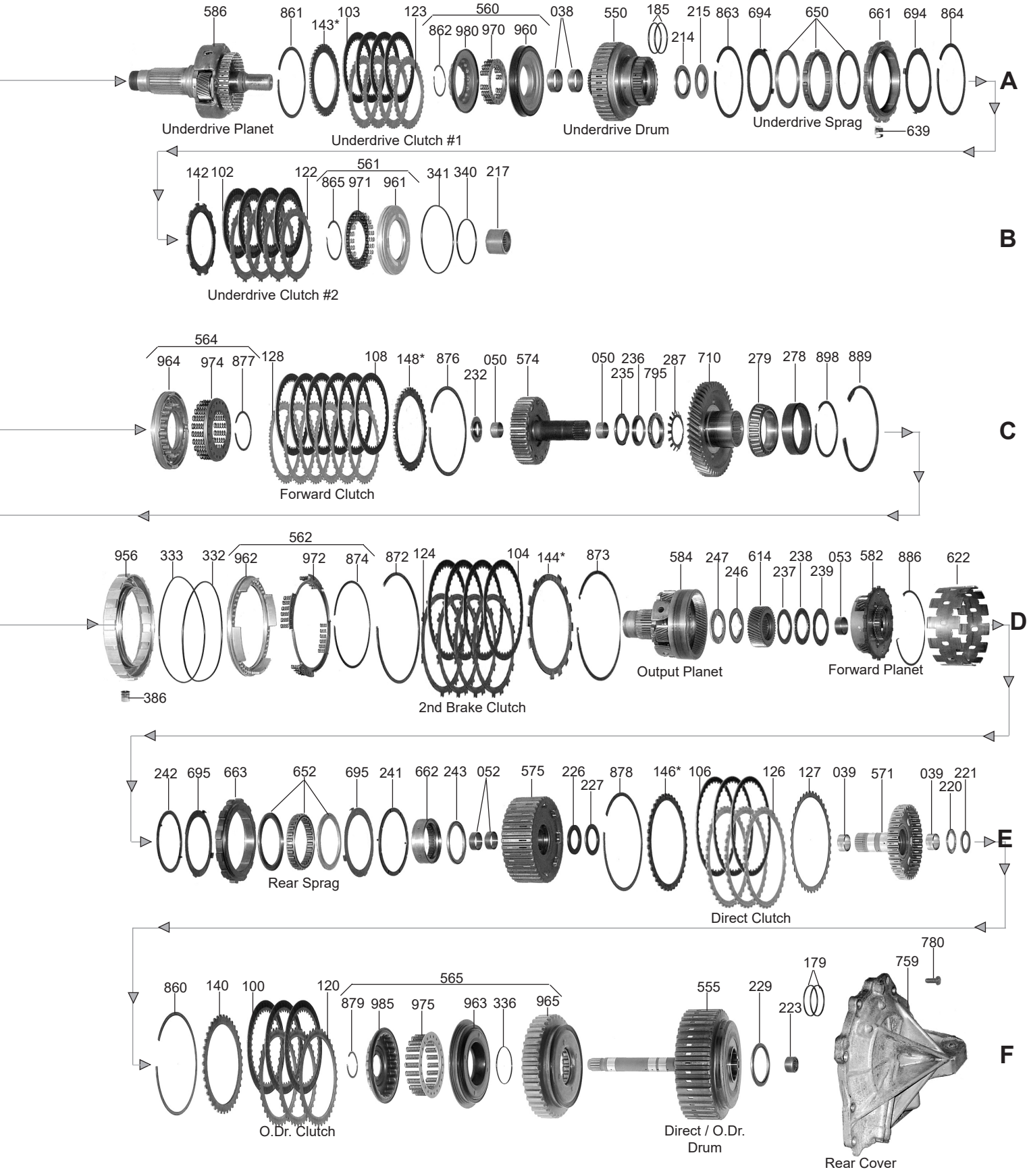

TOYOTA

© Whatever It Takes Transmission Parts. Inc.

PART #	PAPER & RUBBER KIT	QTY	REFERENCE #
167000A	Overhaul Kit, U140 (Toyota / Lexus) 1999-Up (Also Fits U240 (Toyota) 1999-Up	1	
167001A	Sub Kit, U140F/U150F Transfer Case Parts 1999-Up	1	

PART #	OVERHAUL KIT	QTY	REFERENCE #
167002ACF	Overhaul Kit, U140/U150/U151/U240/U241 (Combo)(Farpak Pan Gasket) 1999-Up (For Bonded Pistons Sell A167960AK, DK Or EK)	1	
167002AF	Overhaul Kit, U140 (Farpak Pan Gasket) 1999-Up (For Pistons Sell 167960AK)	1	
167002DF	Overhaul Kit, U240/U241/U250E 4 Speed) (Farpak Pan Gasket) 1999-Up (For Pistons Sell 167960DK)	1	
167002EF	Overhaul Kit, U150/U151 (Farpak Pan Gasket) 2002-Up (For Pistons Sell 167960EK)	1	
167002F	Overhaul Kit, U250E (5 Speed)(Without Bonded Pistons) 2005-Up (For Bonded Pistons Sell A167960FK Also)	1	
167002FP	Overhaul Kit, A250E (5 Speed)(With Bonded Pistons) 2005-Up	1	

PART #	MASTER L/STEELS KIT	QTY	REFERENCE #
167004AF	Master L/Steels Kit, U140 (Farpak Pan Gasket) 1999-Up (For Pistons Sell 167960AK)	1	
167004DF	Master L/Steels Kit, U240/U241/(U250E 4 Speed 2003-04) (Farpak Pan Gasket) 1999-Up (For Pistons Sell 167960DK)	1	
167004EF	Master L/Steels Kit, U150/U151 (Farpak Pan Gasket) 2002-Up (For Pistons Sell 167960EK)	1	
167004F	Master L/Steels Kit, U250E (5 Speed) (Without Bonded Pistons) 2005-Up (For Bonded Pistons Sell A167960FK Also)	1	

PART #	MASTER W/STEELS KIT	QTY	REFERENCE #
167006AF	Master W/Steels Kit, U140 (Farpak Pan Gasket) 1999-Up (For Pistons Sell 167960AK)	1	
167006DF	Master W/Steels Kit, U240/U241/(U250E 4 Speed 2003-04) (Farpak Pan Gasket) 1999-Up (For Pistons Sell 167960DK)	1	
167006EF	Master W/Steels Kit, U150/U151 (Farpak Pan Gasket) 2002-Up (For Pistons Sell 167960EK)	1	
167006F	Master L/Steels Kit, U250E (5 Speed)(Without Bonded Pistons) 2005-Up (For Bonded Pistons Sell A167960FK Also)	1	

PART #	FILTERS	QTY	REFERENCE #
167010AA	Filter, U140/U140F/U141E/U240E 2WD & 4x4 1998-Up	1	
167010B	Filter, U150E/U151E/U151F/U250E 2002-Up (Lexus ES300/ES330 2002-Up, RX330 2004-Up) (Toyota Camry 2003-Up & Sienna 2004-Up)(OE)	1	

PART #	FILTER KITS	QTY	REFERENCE #
167011AA	Filter Kit, U140E/U140F/U141E/U240E 2WD & 4x4 1998-Up	1	

PART #	BUSHINGS	QTY	REFERENCE #
167030A	Bushing Kit, U140E/U240/U241/U250 (4 Speed)(8 Bushings) 1999-Up	1	
167030E	Bushing Kit, U151E (9 Bushings) 2002-Up (Contains: Underdrive/Direct Drum, Rear Sun Gear (Front), Rear Sun Gear (Rear), Forward Hub, Overdrive Clutch Hub (Front), Overdrive Clutch Hub (Rear), Front Stator)	1	
167030F	Bushing Kit, U250E (5 Speed) 2002-Up	1	
167034	Bushing, U140/U240/U241/U250 (Enhanced W/ CT-101 Dry Lubricant W/Indents For Better Oil Retention)	1	
167034A	Use 57034A.	1	
57034A	Bushing, U140/U150/U151/U240/U241/U250 Pump Body (1.500"ID)(Brass With Oil Pockets)	1	
167036A	Bushing, U140/U150/U151/U240/U241/U250 Stator (Front) (.840"ID) 1999-Up	2	
167038A	Bushing, U140/U141/U151 Underdrive Drum (1.475"ID) 1999-Up	2	
167039E	Bushing, U151/U250 Overdrive Clutch Hub (1.005"OD)(.902"ID) 2005-Up	2	
167050A	Bushing, U140/U151/U240/U241/U250E Forward Hub (.905"ID) 1999-Up	2	
167052A	Bushing, U140/U240/U241 Direct Hub (1.190"ID) 1999-Up	1	
167053A	Bushing, U140/U240/U241/U250E Forward Planet (1.075"ID) 1999-Up	1	

PART #	METAL CLAD SEALS	QTY	REFERENCE #
167070A	Use 127070A.	1	
127070A	Seal, U140 Front (Pump) 1999-Up	1	
167076A	Use 87076A.	1	
87076A	Seal, U140/U150 Axle (Bell Housing Side)(2.210"OD) 1999-Up		
167076AC	Seal, U140F (4x4) Axle (Bell Housing Side) (2.920"OD) 1999-Up	1	

© Whatever It Takes Transmission Parts. Inc.

67076BA.....Seal, U240 Axle (Both Sides) (2.180”OD) 1999-Up.....2
167076D.....Use 67076BA.....1
167076E.....Seal, U241/U250 Axle (Bell Housing Side) (2.520”OD) 1999-Up.....1
167077A.....Seal, U140 Axle (Case Side) (3.160”OD)(.892” Thick) 1999-Up (When Out Use 87077A).....1
87077A.....Seal, U140/U151 Axle (Case Side)(3.160”OD)(1.895”ID) 1999-Up.....1-2
167077E.....Seal, U151 Axle (Case Side) (3.160”OD)(.682” Thick) 1999-Up (Use 87077A).....1

PART #	FRICTION CLUTCH	QTY	REFERENCE #

167100E.....Friction, U151/U250 Overdrive Clutch (.067”) 40 Teeth (5.950”OD) (Grooved) 2001-Up.....4
167102A.....Friction, U140/U151 Underdrive Clutch #2 (.072”) 28 Teeth (4.625”OD) 1999-Up.....4
167102D.....Friction, U240/U241/U250 Underdrive Clutch #2 (.072”) 28 Teeth (4.430”OD) 1999-Up.....4
167103A.....Friction, U140/U151 Underdrive Clutch #1 (.073”) 40 Teeth (4.920”OD) 1999-Up.....4
167103D.....Friction, U240/U241/U250 Underdrive Clutch #1 (.073”) 40 Teeth (4.482”OD) 1999-Up.....4
167104A.....Friction, U140/U240/U241/(U250 Some) 2nd Brake Clutch (.073”) 40 Teeth 1999-Up (With Straight Grooves).....4
167104E.....Friction, U151 (U250 Some) 2nd Brake Clutch (.073”) (40 Teeth) 1999-Up (Waffle).....4
167106A.....Friction, U140/U240/U241/U250 Direct Clutch (.073”) 40 Teeth (6.25”OD) 1999-Up.....3-4
167106E.....Friction, U151/U250 Direct Clutch (.062”) 40 Teeth (6 1/4”OD) 1999-Up.....3
167108A.....Friction, U140/U151/U240/U241/(U250 Some) Forward Clutch (.073”) 40 Teeth (5.385”OD) (Smooth) 1999-Up.....4-6
167108E.....Friction, U150E/U151E Forward Clutch (.073”)(40 Teeth)(Grooved) 2001-Up.....4-6
167114A.....Friction, U140/U150/U240/U241/U250 Low/Reverse Clutch (.075”) 40 Teeth (6 3/8”OD) 1999-Up.....5
167119A.....Friction Module, U140E/U140F 1999-Up.....1
167119D.....Friction Module, U240/U241 1999-Up.....1
167119E.....Friction Module, U151 2001-Up.....1
167119F.....Friction Module, U250E 2005-Up.....1

PART #	STEEL CLUTCH	QTY	REFERENCE #

167120E.....Steel, U151/U250 Overdrive Clutch (.071”) 40 Teeth (5.010”ID) 2001-Up.....4
167122A.....Steel, U140/U151 Underdrive Clutch #2 (.070”) 11 Teeth (3.660”ID) 1999-Up.....4
167122D.....Steel, U240/U241/U250 Underdrive Clutch #2 (.070”) 11 Teeth (3.520”ID) 1999-Up.....4
167123A.....Steel, U140/U151 Underdrive Clutch #1 (.079”) 40 Teeth (3.903”ID) 1999-Up.....4
167123D.....Steel, U240/U241/U250 Underdrive Clutch #1 (.079”) 40 Teeth (3.572”ID) 1999-Up.....4
167124A.....Steel, U140/U240/U241/U250 2nd Brake Clutch (.079”) 12 Teeth (With Rounded Notches On Each Tooth) 1999-Up.....4
167124E.....Steel, U151 2nd Brake Clutch (.079”) 12 Teeth (With V Notches On Each Tooth) 1999-Up.....4
167126A.....Steel, U140/U240/U241/U250 Direct Clutch (.118”) 40 Teeth (5.536”ID) 1999-Up.....3-4
167126E.....Steel, U151/U250 Direct Clutch (.072”) 40 Teeth (5.536”ID) 1999-Up.....3
167127E.....Steel Cushion, U151/U250 Direct Clutch (.058”) 40 Teeth (5.575”ID) 2001-Up.....1
167128A.....Steel, U140/U151/U240/U241/U250 Forward Clutch (.071”) 40 Teeth (4.499”ID) 1999-Up.....6
167134A.....Steel, U140/U151/U240/U241/U250 Low/Reverse Clutch (.070”) 12 Teeth 1999-Up.....5
167135AC.....Steel, U140/U151/U240/U241/U250 Low/Reverse Clutch (.078”) #3 (12 Teeth) 1999-Up.....1
167135AD.....Steel, U140/U151/U240/U241/U250 Low/Reverse Clutch (.083”) #4 (12 Teeth) 1999-Up.....1
167135AE.....Steel, U140/U151/U240/U241/U250 Low/Reverse Clutch (.086”) #5 (12 Teeth) 1999-Up.....1
167135AF.....Steel, U140/U151/U240/U241/U250 Low/Reverse Clutch (.091”) #6 (12 Teeth) 1999-Up.....1
167139A.....Steel Module, U140 1999-Up.....1
167139D.....Steel Module, U240/U241/U250 1999-Up.....1
167139E.....Steel Module, U150/U151 2001-Up.....1
167139F.....Steel Module, U250E 2005-Up.....1

PART #	PRESSURE PLATES	QTY	REFERENCE #

167140ED.....Pressure Plate, U151/U250 Overdrive Clutch (.134”) 40 Teeth (5.005”ID) (Stepped) 2001-Up.....1
167142AA.....Pressure Plate, U140/U151 Underdrive Clutch (#2) (.119”) (#1) (11 Teeth) (3.662”ID) 1999-Up.....1
167142AB.....Pressure Plate, U140/U151 Underdrive Clutch (#2) (.126”) (#2) (11 Teeth) (3.662”ID) 1999-Up.....1
167142DA.....Pressure Plate, U240/U241/U250 Underdrive Clutch (#2) (.119”) (#A) (11 Teeth) (3.524”ID) 1999-Up.....1
167142DB.....Pressure Plate, U240/U241/U250 Underdrive Clutch (#2) (.126”) (#B) (11 Teeth) (3.524”ID) 1999-Up.....1
167142DC.....Pressure Plate, U240/U241/U250 Underdrive Clutch (#2) (.133”) (#C) (11 Teeth) (3.524”ID) 1999-Up.....1
167143AA.....Pressure Plate, U140/U151 Underdrive Clutch (#1)(.118”)(40 Teeth)(3.905”ID) 1999-Up.....1
167143AB.....Pressure Plate, U140/U151 Underdrive Clutch (#1)(.122”)(40 Teeth)(3.905”ID) 1999-Up.....1
167143AC.....Pressure Plate, U140/U151 Underdrive Clutch (#1)(.126”)(40 Teeth)(3.905”ID) 1999-Up.....1
167143DA.....Pressure Plate, U240/U241/U250 Underdrive Clutch (#1)(.118”)(40 Teeth)(3.575”ID) 1999-Up.....1
167143DB.....Pressure Plate, U240/U241/U250 Underdrive Clutch (#1)(.122”)(40 Teeth)(3.575”ID) 1999-Up.....1
167143DC.....Pressure Plate, U240/U241/U250 Underdrive Clutch (#1)(.126”)(40 Teeth)(3.575”ID) 1999-Up.....1

© Whatever It Takes Transmission Parts. Inc.

PART #	PRESSURE PLATES	QTY	REFERENCE #
167144AB	Pressure Plate, U140/U151/U240/U241/U250 2nd Brake Clutch (.121") (#2) 1999-Up	1	
167144AC	Pressure Plate, U140/U151/U240/U241/U250 2nd Brake Clutch (.125") (#3) 1999-Up	1	
167144AD	Pressure Plate, U140/U151/U240/U241/U250 2nd Brake Clutch (.130") (#4) 1999-Up	1	
167144AE	Pressure Plate, U140/U151/U240/U241/U250 2nd Brake Clutch (.134") (#5) 1999-Up	1	
167144AF	Pressure Plate, U140/U151/U240/U241/U250 2nd Brake Clutch (.138") (#6) 1999-Up	1	
167146AA	Pressure Plate, U140/U151/U240/U241/U250 Direct Clutch (.118")(40 Teeth) 1999-Up	1	
167146AB	Pressure Plate, U140/U151/U240/U241/U250 Direct Clutch (.122")(40 Teeth) 1999-Up	1	
167146AC	Pressure Plate, U140/U151/U240/U241/U250 Direct Clutch (.126")(40 Teeth) 1999-Up	1	
167146AD	Pressure Plate, U140/U151/U240/U241/U250 Direct Clutch (.130")(40 Teeth) 1999-Up	1	
167146AE	Pressure Plate, U140/U151/U240/U241/U250 Direct Clutch (.134")(40 Teeth) 1999-Up	1	
167148AB	Pressure Plate, U140/U151/U240/U241/U250 Forward Clutch (.125")(#2)(40 Teeth) 1999-Up	1	
167148AC	Pressure Plate, U140/U151/U240/U241/U250 Forward Clutch (.132")(#3)(40 Teeth) 1999-Up	1	
167148AD	Pressure Plate, U140/U151/U240/U241/U250 Forward Clutch (.137")(#4)(40 Teeth) 1999-Up	1	
167148AE	Pressure Plate, U140/U151/U240/U241/U250 Forward Clutch (.141")(#5)(40 Teeth) 1999-Up	1	

PART #	VALVE BODY KITS	QTY	REFERENCE #
T167165A	Shift Kit, U140E/U240E/U241E 1999-Up (Transgo)	1	
T167165B	Shift Kit, U150E/U151E/U250E 2002-Up (Transgo)	1	

PART #	SEALING RINGS	QTY	REFERENCE #
167175AT	Ring Kit, U140/U240/U241 (Teflon) 1999-Up (8 Rings: 6 Teflon & 2 Metal)	1	
167175BT	Ring Kit, U150E/151E/U151F (Teflon) 2002-Up	1	
167177AT	Ring, U140/U240/U241 Forward Drum Shaft (Teflon) 1999-Up	1	
167179AT	Ring, U140/U240/U241 Rear Cover (Teflon) 1999-Up	2	
167181AT	Ring, U140/U240/U241 Stator (Rear) (Teflon) 1999-Up	2	

PART #	WASHERS & BEARINGS	QTY	REFERENCE #
167209A	Caged Needle Bearing, U140/U151/U240/U241/U250 Stator (Rear) 1999-Up	1	
167211A	Bearing W/Races, U140/U240/U241 Stator To Forward Drum 1999-Up	1	
167214A	Bearing W/Race, U140/U151/U240/U241/U250 Underdrive Drum To Case 1999-Up	1	
167215AA	Race, U140/U151/U240/U241/U250 Underdrive Bearing #214 To Case (Selective)(2.150"OD)(1.165"ID) 1999-Up	1	
167217A	Caged Needle Bearing, U140/U151/U240/U241/U250 Underdrive Planet Shaft To Case (Cast # DB502514 NSK or F390164 INA USA) 1999-Up	1	
167220E	Bearing W/Race, U151/U250 Overdrive Hub To Direct Drum (.130" Thick)(1.547"OD)(.947"ID) 2001-Up	1	
167221E	Race, U151/U250 Overdrive Hub To Direct Drum (.097" Thick)(1.480"OD)(.939"ID) 2001-Up	1	
167223A	Caged Needle Bearing, U140/U240/U241 Rear Cover (F300463 INA) 1999-Up	1	
167226A	Bearing W/Race, U140/U240/U241/U250 Direct Hub To Direct Drum (.109"Thick)(1.893"OD)(1.332"ID) 1999-Up	1	
167226E	Race, U151/U250 Direct Hub To Direct Drum (.032" Thick)(1.800"OD)(1.305"ID) 1999-Up	1	
167227A	Race, U140/U240/U241/U250 Direct Hub To Direct Drum (1.805"OD)(1.197"ID) 1999-Up	1	
167227E	Bearing W/Race, U151/U250 Direct Hub To Direct Drum (.110" Thick)(1.815"OD)(1.262"ID) 1999-Up	1	
167229A	Use U167243A	1	
167229E	Bearing W/Races, U151/(U250 Some) Direct/Overdrive Drum To Rear Cover (.140" Thick)(2.975"OD)(2.227"ID) 2001-Up	1	
167232A	Bearing W/Races, U140/U151/U240/U241/U250 Forward Drum To Hub 1999-Up	1	
167235A	Bearing W/Race, U140/U151/U240/U241/U250 Forward Hub To Drive Gear (Front) 1999-Up	1	
167236A	Race, U140/U151/U240/U241/U250 Forward Hub To Drive Gear 1999-Up	1	
167237A	Race, U140/U240/U250 Sun Gear To Forward Planet (Front) (.032" Thick)(2.275"OD)(1.587"ID) 1999-Up	1	
167237E	Race, U151/U241 Sun Gear To Forward Planet (Front) (.032" Thick)(2.333"OD)(1.587"ID) 1999-Up (Can Use 167237A)	1	
167238A	Bearing, U140/U151/U240/U241/U250 Sun Gear To Forward Planet (.118" Thick)(2.354"OD)(1.524"ID) 1999-Up	1	
167239A	Race, U140/U240/U241/U250 Sun Gear To Forward Planet (Rear)(.032" Thick)(2.275"OD)(1.528"ID) 1999-Up	1	
167239E	Race, U151/U241 Sun Gear To Forward Planet (Rear) (.032" Thick)(2.335"OD)(1.528"ID) 1999-Up	1	
167241A	Use U167242A	1	
167241E	Washer, U151 Sprag Retainer To Direct Clutch Hub (3 Tab)(Plastic)(.085" Thick)(3.980"OD)(3.480"ID) 1999-Up	1	

© Whatever It Takes Transmission Parts. Inc.

167242A ..... Washer, U140/U151/U240/U241/U250 Forward Planet To Sprag Retainer (2 Tab)(Plastic)
..... (.086" Thick)(4.086"OD)(3.570"ID) 1999-Up (Also Fits U140/U151/U240/U241/U250 Washer
..... # 241) 1-2 35737-08010
167242EA ..... Washer, U151/U250 Forward Planet To Sprag Retainer (5 Tab Plastic)(.086" Thick)(3.570"ID)
..... 2001-Up ..... 1 .....
167243A ..... Bearing W/Races, U140/U151/U240/U241/U250 Rear Sprag Inner Race To Direct Hub
..... W/Sungear (.140" Thick)(2.732"OD)(2.110"ID) 1999-Up (Also Fits U140/U240/U241/(U250 Some)
..... Direct Drum To Rear Cover 1999-Up) ..... 1 .....
167246E ..... Race, U151 Output Planet To Sun Gear (.031" Thick)(2.230"OD)(1.335"ID)(2 Piece Type)
..... 1999-Up ..... 1 .....
167247A ..... Bearing W/Races, U140/U240/U241/U250 Output Planet To Sun Gear (.145" Thick)(2.033"OD)
..... (1.350"ID)(1 Piece) 1999-Up 1 90080-37009
167247E ..... Bearing W/Race, U151 Output Planet To Sun Gear (.130" Thick)(2.220"OD)(1.280"ID)
..... (2 Piece Type) 1999-Up ..... 1 .....
167249F ..... Use 167277F ..... 1 .....
167250A ..... Use 167278A ..... 1 .....
167250F ..... Use 167278F ..... 1 .....
167251A ..... Use 167279A ..... 1 .....
167251F ..... Use 167279F ..... 1 .....
167273A ..... Collar, U140/U151 Between Nut And Pinion Gear (2.085"OD)(1.375"ID) 1999-Up ..... 1 .....
167273D ..... Collar, U240 Between Nut And Pinion Gear (.884" Thick)(1.965"OD)(1.375"ID) 1999-Up ..... 1 .....
167273DA ..... Collar, U241/U250 Between Nut And Pinion Gear (.884" Thick)(1.888"OD)(1.375"ID) 1999-Up .... 1 .....
167274A ..... Caged Needle Bearing, U140/U151 Underdrive Planet Shaft To Bell Housing (14 Needles)
..... (.885" Thick)(3.080"OD) 1999-Up ..... 1 .....
167274D ..... Caged Needle Bearing, U240/U241/U250 Underdrive Planet Shaft To Bell Housing (17 Needles)
..... (.942" Thick)(3.350"OD) 1999-Up ..... 1 .....
167275A ..... Bearing W/Race, U140/U151 Bell Housing To Pinion Gear (3.333"OD)(2.260"ID) 1999-Up ..... 1 .....
167275D ..... Bearing W/Race, U240/U241/U250 Bell Housing To Pinion Gear (.130" Thick)(3.068"OD)
..... (2.090"ID) 1999-Up ..... 1 .....
167276A ..... Shim, U140/U151 Bell Housing To Pinion Gear (.138" Thick)(3.260"OD)(2.228"ID) 1999-Up ..... 1 .....
167276D ..... Race, U240/U241/U250 Bell Housing To Pinion Gear (.149" Thick)(2.955"OD)(2.057"ID)
..... 1999-Up ..... 1 .....
167277F ..... Inner Race, U250 Drive Gear To Ball Bearing (Cast # UR) 1999-Up (Also Fits U250 (#249)
..... Output Planet To Ball Bearing 1999-Up ..... 1-2 .....
167278A ..... Cup Race, U140/U151/U240/U241 Drive Gear To Case (R59Z-7 NSK) 1999-Up (Also Fits
..... U140/U151/U240/U241 Case To Output Planet #250) ..... 1-2 .....
167278F ..... Cup Race, U250 Drive Gear To Case (BA56Z-2 NSK) 1999-Up (Also Fits U250 Case To
..... Output Planet #250) ..... 1-2 .....
167279A ..... Cone Bearing, U140/U151/U240/U241 Drive Gear To Case (R59Z-7 NSK) (30 Rollers) 1999-Up
..... (Also Fits U140/U151/U240/U241 Case To Output Planet #251) ..... 1-2 .....
167279F ..... Cone Bearing, U250 Drive Gear To Case (BA59Z-2 NSK) (22 Balls) 1999-Up (Also Fits
..... U250 Case To Output Planet #251) ..... 1-2 .....
167280DA ..... Inner Race, U151/U241/U250 Driven Transfer Gear (Fits Ball Bearing Type Bearing #281DA
..... With 13 Balls) 1999-Up ..... 2 .....
167280E ..... Inner Race, U151 Driven Transfer Gear (Fits Ball Bearing Type Bearing #281E With 16 Balls)
..... 1999-Up ..... 2 .....
167281A ..... Cone Bearing, U140 Driven Transfer Gear (Cast # 45T090904-1 KOYO)
..... 27 Tapered Rollers With Inner Race 1999-Up ..... 1 .....
167281D ..... Cone Bearing, U240 Driven Transfer Gear (Cast # 43KC092 NACHI) (22 Tapered Rollers
..... With Inner Race 1999-Up ..... 1 .....
167281DA ..... Ball Bearing, U241 (U250 Some) Driven Transfer Gear (13 Balls With Cage) Without Inner
..... Race 1999-Up ..... 2 .....
167281E ..... Ball Bearing, U151 Driven Transfer Gear (16 Balls With Cage) Without Inner Race 2001-Up ..... 2 .....
167281F ..... Ball Bearing, U250 (Some) Driven Transfer Gear (14 Balls With Cage) Without Inner Race
..... 2001-Up ..... 2 .....
167287A ..... Washer, U140/U151/U240/U241/U250 Nut To Drive Gear 1999-Up ..... 1 .....
167288A ..... Cup Race, U140/U151 Differential (Case Side) (3.545"OD) 1999-Up (Also Fits U140/U151
..... Differential (Bell Housing Side) 1999-Up ..... 1-2 .....
167288D ..... Cup Race, U240 Differential (Case Side) (2.835"OD) 1999-Up ..... 1 .....
167288E ..... Cup Race, U241/U250 Differential (Case Side) (3.150"OD) 1999-Up ..... 1-2 .....
167289A ..... Cone Bearing, U140 Differential (Case Side) (STB5090 KOYO) 1.960"ID ..... 1 .....
..... (28 Rollers) 1999-Up (Also Fits U140 Differential (Bell Housing Side) ..... 1-2 .....
167289AK ..... Bearing & Race Kit, U140 Differential (Case Side)(1.960"ID, 28 Roller Cone Bearing)(3.545"OD
..... Cup Race)(Cast # STB5090 KOYO) 1999-Up (Also Fits U140 Differential (Bell Housing Side)
..... 1999-Up) ..... 1-2 .....
167289D ..... Cone Bearing, U240 Differential (Case Side) (44KB721 NACHI) 1.730"ID (23 Rollers)
..... 1999-Up ..... 1-2 .....
167289DA ..... Cone Bearing, U241 (U250 Some) Differential (Case Side) (STB5080) (1.965"ID) (26 Rollers)
..... 1999-Up ..... 1 .....

© Whatever It Takes Transmission Parts. Inc.

PART #	WASHERS & BEARINGS (Continued)	QTY	REFERENCE #
167289E	Cone Bearing, U151 Differential (Case Side) (30210JR-1) (1.965"ID) (19 Rollers) 1999-Up (Also Fits U151 Differential (Bell Housing Side)	1-2	
167289EK	Bearing & Race Kit, U151 Differential (Case Side)(1.965"ID)(19 Roller Cone Bearing) (3.545"OD Cup Race) 1999-Up (Also Fits U151 Differential (Bell Housing Side) 1999-Up	1-2	
167289F	Cone Bearing, U250 Differential (Case Side) (STA5076) (1.965"ID) (29 Rollers) 1999-Up (Also Fits U250 (Some) Differential (Bell Housing Side) 1999-Up	1-2	
167290AA	Shim, U140/U151 Differential (Case Side) Selective (3.525"OD) 1999-Up (Also Fits U140 Differential (Bell Housing Side)	1-2	
167290DA	Shim, U240 Differential (Case Side) Selective (2.820"OD) 1999-Up	1	
167290EA	Shim, U241/U250 Differential (Case Side) Selective (3.130"OD) 1999-Up	1	
167291A	Use U167288A	1	
167291D	Cup Race, U240 Differential (Bell Housing Side) (TRA080702 KOYO) (2.680"OD) 1999-Up	1	
167291DA	Cup Race, U241/U250 Differential (Bell Housing Side) (R50-41 NSK) (2.992"OD) 1999-Up	1	
167291E	Use 167288A	1	
167292A	Use 167289A	1	
167292D	Cone Bearing, U240 Differential (Bell Housing Side) (TRA080702 KOYO) (1.570"ID) (24 Rollers) 1999-Up	1	
167292DA	Cone Bearing, U241 Differential (Bell Housing Side) (R50-41 NSK) (1.965"ID) 1999-Up	1	
167292E	Use 167289E	1	
167292F	Use 167289F	1	
167293A	Use U167290AA	1	

PART #	GASKETS & RUBBER COMPONENTS	QTY	REFERENCE #
167300A	Gasket, U140/U150/U151/U240/U241/U250 Bottom Pan (Cork) 1999-Up	1	
167300AF	Gasket, U140/U240/U241 Bottom Pan (Farpak) 1999-Up	1	
167311A	O-Ring, U140/U240/U241 Pump Body 1999-Up	1	

PART #	TECHNICAL MANUALS	QTY	REFERENCE #
167400A	Technical Manual, U140E/U140F/U240E (Will Be Replacing Factory Manual With ATSG All In One Manual)	1	
167400B	Technical Manual, U150E/U250E 2002-Up	1	

PART #	ELECTRICAL COMPONENTS	QTY	REFERENCE #
167410A	Nuetral Safety Switch, U140 (9 Pin Connector) (Has 6 Screws That Holds It Together) 1999-Up	1	
167410D	Nuetral Safety Switch, U151/U240/U241/U250 (9 Pin Connector) (Has 7 Rivits That Holds It Together) 1999-Up (Cast # 84540-48010-AV2317)	1	
167410DA	Neutral Safety Switch, U151/U240/U241/U250 (9 Pin Connector)(Has 7 Rivits That Holds It Together) 1999-Up (Cast # 84540-32010-AV2303)	1	
167420A	Solenoid Kit, U140E/U140F/U240E/U241E (5 Solenoids) 1999-08	1	
167420E	Solenoid Kit, U150E/U151E/ U250E (7 Solenoids) 2002-Up	1	
167421A	Solenoid, U140E/U140F/U240E/U241E Linear Shift (SL1)(A) 1999-Up (With 2 Hole Bracket) (3.500" Long)(1.115"OD)(White Connector)	1	
167421AA	Solenoid, U140E/U140F/U240E/U241E Linear Shift (SL1)(A) 2006-Up (No Bracket) (2.880" Long)(.840"OD)(Black Connector)	1	
167421B	Solenoid, U150E/U151E/U250E Linear Shift (SL2)(B) (And SL3)(2001-03 Lexus Only)	1	
167422A	Solenoid, U140E/U140F/U240E/U241E Linear Shift (SL2)(B) 1999-05	1	
167422AA	Solenoid, U140E/U140F/U240E U241E Linear Shift SL2(B) 2006-Up	1	
167422B	Solenoid, U150E/U151E/U250E Shift (On-Off) (S2 Or SR) 2002-07	1	
167423B	Solenoid, U150E/U151E/U250E Linear Shift (SL1)(A) 2002-07	1	
167425A	Solenoid, U140E/U140F/U240E/U241E TCC/DSL (Lock-Up) 1999-Up	1	
167425B	Solenoid, U150E/U151E/U250E TCC/DSL (Lock-Up)(E) 2002-07	1	
167428A	Solenoid, U140E/U140F/U240E/U241E EPC (SLT) 1999-Up	1	
167428B	Solenoid, U150E/U151E/U250E EPC (Electronic Pressure Control) (SLT) 2002-07	1	
167431A	Solenoid, U140E/U140F/U240E/U241E Shift (S4)(D) 1998-Up	1	
167431AA	Solenoid, U140E/U140F/U240E/U241E Shift (S4)(D) 2007-Up	1	
167436A	Sensor, U140/U240/U241/U250 Input & Output (2 Prong)(With .075" Long Metal Tip) 1999-Up	1	
167436E	Sensor, U151 Input & Output (2 Prong) (With .175" Long Metal Tip) 2001-Up	1	
167440B	Solenoid, U150E/U151E/U250E Shift (#4) (SS3, S4)(D) 2002-07	1	
167446A	Wire Harness, U140/U240/U241/U250 Internal (10 Prong Connector) 1999-08	1	
167446AA	Wire Harness, U140/U240/U241 U250 Internal (10 Prong Connector) 2006-12 (4 Solenoids Connector Are .290"Wide)(1 Is .400"Wide)	1	
167446E	Wire Harness, U151/U250 Internal (13 Prong Connector) 2001-Up	1	

© Whatever It Takes Transmission Parts. Inc.

PART #	MISCELLANEOUS COMPONENTS	QTY	REFERENCE #
167492A	Drain Plug, U140/U151/U240/U241/U250 (Allen Head) 1999-Up	1	

PART #	HARD PARTS	QTY	REFERENCE #
167510A	Pump Body W/Gears, U140/U240 (With Crescent) 1999-Up	1	
167510B	Pump Body W/Gears, U140/U241/(U250 Some) (Without A Crescent) (.422" Thick Gears) 1999-Up	1	
167510E	Pump Body W/Gears, U151/(U250 Some) (Without A Crescent)(.460" Thick Gears) 1999-Up	1	
167520A	Stator, U140/U240 (Fits Body With A Crescent) (Vented) 1999-Up	1	
167520B	Stator, U140/U241 (U250 Some)(Fits Body Without A Crescent) (Vented) 1999-Up	1	
167520D	Stator, U151 (U250 Some)(Fits Body Without A Crescent) (Non-Vented) 1999-Up	1	
167550A	Drum, U140/U151 Underdrive Clutch #1 (4 Clutch) (With 35 Teeth Sun Gear) 1999-Up	1	
167550AA	Drum, U140/U151 Underdrive Clutch #1 (3 Clutch) (With 35 Teeth Sun Gear) 1999-Up	1	
167550D	Drum, U240/U241/U250 Underdrive Clutch #1 (3 Clutch) (With 32 Teeth Sun Gear) 1999-Up	1	
167554A	Drum, U140 Forward W/Shaft (6 Clutch) (26 Spline Shaft) 1999-Up	1	
167554D	Drum, U151/U241/U250 Forward W/Shaft (5 Clutch) (26 Spline Shaft) 1999-Up	1	
167554DA	Drum, U240 Forward W/Shaft (4 Clutch) (26 Spline Shaft) 1999-Up	1	
167555A	Drum W/Shaft, U140/U240 Direct Clutch (4 Clutch) 1999-Up	1	
167555D	Drum W/Shaft, U241/(U250 Some) Direct Clutch (3 Clutch)(1 1/4" Tall Clutch Splines) 1999-Up	1	
167555F	Drum W/Shaft, U151/(U250 Some) Direct/Overdrive Clutch (2" Tall Clutch Splines) 2001-Up	1	
167560A	Piston Kit, U140/U151 Underdrive Clutch #1 (Bonded) (2.120"ID Piston) 1999-Up	1	
167560D	Piston Kit, U240/U241/U250 Underdrive Clutch #1 (Bonded) (1.945"ID Piston) 1999-Up	1	
167561A	Piston Kit, U140/U151/U240/U241/U250 Underdrive Clutch #2 (Aluminum Piston) 1999-Up	1	
167562D	Piston Kit, U241/U250 2nd Brake Clutch (Aluminum Piston Is .927" Thick) 1999-Up	1	
167562DA	Piston Kit, U240/U241 2nd Brake Clutch (Aluminum Piston Is .750" Thick) 1999-Up	1	
167562DB	Piston Kit, U240/U241 2nd Brake Clutch (Aluminum Piston Is .890" Thick) 1999-Up	1	
167562E	Piston Kit, U151 2nd Brake Clutch (Aluminum Piston Is .790" Thick) 1999-Up	1	
167564A	Piston Kit, U140/U240/(U250 Some) Forward Clutch (Aluminum Piston) 1999-Up	1	
167564D	Piston Kit, U151/U241/(U250 Some) Forward Clutch (Bonded Piston) 1999-Up	1	
167565A	Piston Kit, U140/U240/U241/(U250 Some) Direct Clutch (Bonded Piston Is 6 3/16"OD)) 1999-Up	1	
167565E	Piston Kit, U151/(U250 Some) Direct/Overdrive Clutch (Bonded Piston Is 6 1/2"OD) 2001-Up	1	
167567A	Piston Kit, U140 Low/Reverse Clutch (Aluminum Piston Is .551" Thick At The Edge) 1999-Up	1	
167567D	Piston Kit, U240/U241/U250 Low/Reverse Clutch (Aluminum Piston Is .850" Thick At The Edge) 1999-Up	1	
167567E	Piston Kit, U150 Low/Reverse Clutch (Aluminum Piston Is .690" Thick At The Edge) 1999-Up	1	
167571E	Hub, U151/U250 Overdrive Clutch (40 Teeth Clutch Hub) (3.505" Overall Height) (With Eight Oval Slots) 2001-Up	1	
167574A	Hub, U140/U151/U240/U241/U250 Forward Clutch (40 Teeth)(25 Splines) 1999-Up	1	
167575A	Hub, U140/U240/U241/U250 Direct Clutch With Sun Gear (31 Teeth)(Hub Height Is 1.991" Tall) 1999-Up	1	
167575E	Hub, U151/U250 Direct Clutch W/Sun Gear (31 Teeth) (Hub Height Or Clutch Spline Length Is 1.865" Tall) 2001-Up	1	
167577A	Hub, U140/U151/U240/U241/U250 Low/Reverse Clutch (40 Teeth)(15 Lugs) 1999-Up	1	
167582A	Planet, U140/U240/U241/U250 Forward (Rear) 3 Gear (Uses A 31 Teeth Sun Gear # 575) (Has A Bushing #053 Inside) 1999-Up	1	
167582B	Planet, U140/U240/U241/(U250 Some) Forward (Rear)(4 Gear)(31 Teeth Sun Gear # 575) (Has A Bushing #053 Inside) 1999-Up	1	
167582E	Planet, U151/(U250 Some) Forward (3 Gear) (Uses A 31 Teeth Sun Gear # 575)(Has Splines Inside, No Bushing) 2001-Up	1	
167582EA	Planet, U151/U250 Forward (4 Gear)(Uses A 31 Teeth Sun Gear #575)(Has Splines Inside, No Bushing) 2001-Up	1	
167582EB	Planet, U151/U250 Forward (5 Gear)(Uses A 31 Teeth Sun Gear #575)(Has Splines Inside, No Bushing) 2001-Up	1	
167583A	Planet Kit, U140/U240/U241/U250 (With 3 Gear Output Or Front Planet) 1999-Up (Contains: #594/577/584/247/614/237/238/239/582/575)(The 575 Hub Height Is 1.991" Tall)	1	
167583AA	Planet Kit, U140/U240/U241/U250 (With 3 Gear Output Or Front Planet) 1999-Up (Contains: #594/577/584/247/614/237/238/239/582/575)(The 575 Hub Height Is 1.723" Tall)	1	
167583B	Planet Kit, U140/U240/U241/(U250 Some) (With 4 Gear Output Or Front Planet) 1999-Up (Contains: #594/577/584/247/614/237/238/239/582/575)(The 575 Hub Height Is 1.991" Tall)	1	
167583BA	Planet Kit, U140/U240/U241/(U250 Some) (With 4 Gear Output Or Front Planet) (Contains: # 594/577/584/247/614/237/238/239/582/575)(The 575 Hub Height Is 1.723" Tall)	1	
167583E	Planet Kit, U151/U250 (With 4 Gear Output Or Front Planet And 3 Gear Forward Planet) (Contains: # 594/577/584/246/247/614/237/238/239/582/575)(The 575 Hub Height Is 1.865" Tall)	1	
167583EA	Planet Kit, U151/U250 (With 4 Gear Output Or Front Planet & 4 Gear Forward Planet) (Contains: #594/577/584/246/247/614/237/238/239/282 & 575)(The 575 Hub Height Is 1.865" Tall)	1	

© Whatever It Takes Transmission Parts. Inc.

PART #	HARD PARTS (Continued)	QTY	REFERENCE #
167584A	Planet, U140/U240/U241/U250 Output (Front)(3 Gear)(Uses A 43 Teeth Sun Gear) 1999-Up (Use 167583 Only)	1	
167584B	Planet, U140/U151/U240/U241/U250 Output (Front)(4 Gear)(Uses A 43 Teeth Sun Gear) 1999-Up (Use 167583 Only)	1	
167586A	Planet, U140 Underdrive (3 Gear) 9 1/8" Long (Uses 25 Teeth Sun Gear) 1999-Up	1	
167586D	Planet, U240/U241 Underdrive (3 Gear) 8 7/8" Long (Uses 32 Teeth Sun Gear) (Comes Without Bearing/Race #280 & #281) 1999-Up	1	
167586E	Planet, U151 Underdrive (4 Gear) (9 1/8" Long) (Uses 35 Teeth Sun Gear)(With Race #280DA For A 13 Ball Bearing) 2001-Up	1	
167586EA	Planet, U151 Underdrive (4 Gear) (9 1/8" Long) (Uses 35 Teeth Sun Gear)(With Race #280E For A 16 Ball Bearing) 2001-Up	1	
167586EB	Planet, U151 Underdrive (4 Gear) (9 7/8" Long) (Uses 35 Teeth Sun Gear)(With Race #280E For A 16 Ball Bearing) 2004-Up	1	
167586F	Planet, U250 Underdrive (4 Gear) (8 7/8" Long) (Uses 32 Teeth Sun Gear) 1999-Up	1	
167594A	Ring Gear, U140/U151/U240/U241/U250 Output Planet (77 Teeth, 40 Lugs) 1999-Up	1	
167596A	Ring Gear, U140 Underdrive Planet (91 Teeth)(1.550" Thick)(5 3/5"OD) 1999-Up	1	
167596D	Ring Gear, U240/U241/U250 Underdrive Planet (83 Teeth) (5 5/16"OD) 1999-Up	1	
167596E	Ring Gear, U151 Underdrive Planet (91 Teeth)(1.460" Thick)(5 3/4"OD) 2001-Up	1	
167614A	Sun Gear, U140/U240/U241 Output Planet (43 Teeth)(No Groove) 1999-Up	1	
167614E	Sun Gear, U151 Output Planet (43 Teeth)(1 Groove) 1999-Up	1	
167614F	Sun Gear, U250 Output Planet (43 Teeth)(2 Groove) 1999-Up	1	
167622A	Shell, U140/U151/U240/U241/U250 Driving (12 Lugs Each Side) 1999-Up	1	
167639A	Spring, U140/U151 Underdrive Sprag Outer Race (Anti-Clunk)(.305" Wide) 1999-Up	1	
167639D	Spring, U240/U241/U250 Underdrive Sprag Outer Race (Anti-Clunk)(.265" Wide) 1999-Up	1	

PART #	SPRAGS & ONE WAY CLUTCHES	QTY	REFERENCE #
167650A	Sprag, U140/U151 Underdrive (24 Elements) (With Brass Caps) 1999-Up	1	
167650D	Sprag, U240/U241/U250 Underdrive (15 Elements) (With Brass Caps) 1999-Up	1	
167652A	Sprag, U140/U151/U240/U241/U250 Rear (28 Elements) (With Brass Caps) 1999-Up	1	
167652AK	Sprag Assembly, U140/U151/U240/U241/U250 Rear (28 Elements) 1999-Up (Contains: # 662, 652, 663, And 2 # 695)	1	
167652AA	Sprag, U140/U151/U240/U241/U250 Rear (22 Elements) (With Brass /caps) 1999-Up	1	
167652AAK	Sprag Assembly, U140/U151/U240/U241/U250 Rear (22 Elements) 1999-Up (Contains: 662, 652, 663 & Two #695)	1	
167661A	Outer Race, U140/U151 Underdrive Sprag (3.915"ID) 1999-Up	1	
167661D	Outer Race, U240/U241/U250 Underdrive Sprag (3.780"ID) 1999-Up	1	
167662A	Inner Race, U140//U151/U240/U241/U250 Rear Sprag (.848" Thick)(2.895"OD) 1999-Up	1	
167663A	Outer Race, U140/U151/U240/U241/U250 Rear Sprag (12 Lugs) 1999-Up	1	

PART #	HARD PARTS (Continued)	QTY	REFERENCE #
167690A	Parking Gear, U140/U151 (15 Lugs) (6 3/8"OD) (.370" Long Inner Spline Length)(Stamped "B" On Pinion Gear Side)1999-Up	1	
167690AA	Parking Gear, U140/U151 (15 Lugs)(6 3/8"OD)(.420" LOng Inner Spline Length)(Stamped "A" On Pinion Gear Side) 1999-Up	1	
167690D	Parking Gear, U240/U241/U250 (15 Lugs) (5 13/16"OD) 1999-Up	1	
167694A	Retainer, U140/U151 Underdrive Sprag (4 Tabs)(4.350"OD) 1999-Up	2	
167694D	Retainer, U240/U241/U250 Underdrive Sprag (4 Tab)(4.150"OD) 1999-Up	2	
167695A	Retainer, U140/U151/U240/U241/U250 Rear Sprag (4 Tab)(Steel)(4.260"OD) 1999-Up	2	
167698A	Tin Shield, U140/U240 For Differential 1999-Up	1	
167710A	Gear, U140 Drive Transfer (52 Teeth, No Groove) 1999-Up	1	
167710D	Gear, U240/U241/U250 Drive Transfer (50 Teeth, 1 Groove) 1999-Up	1	
167710E	Gear, U151 Drive Transfer (52 Teeth, 2 Groove) 1999-Up	1	
167712A	Gear, U140 Driven Transfer With Outer Bearing Races (53 Teeth, No Groove) 1999-Up	1	
167712D	Gear, U240 Driven Transfer With Outer Bearing Races (51 Teeth, 1 Groove) (Uses Cone Tapered Bearing # 167281D) 1999-Up	1	
167712DA	Gear, U241/U250 Driven Transfer With Outer Bearing Races (51 Teeth, 1 Groove) (Uses Ball Bearing # 167281DA) 1999-Up	1	
167712E	Gear, U151 Driven Transfer With Outer Bearing Races (57 Teeth, 2 Groove) (Uses Ball Bearing # 167281E) 2001-Up	1	
167712EA	Gear, U151 Driven Transfer With Outer Bearing Races (57 Teeth, 2 Groove) (Uses Ball Bearing # 167281DA) 2001-Up	1	
167715D	Differential, U240 (77 Teeth, 3 Groove, 16 Bolt Holes With 14 Bolts)(No Speed-O)(28 Roller Bearing On Both Sides)	1	
167715DB	Differential, U240 (79 Teeth, 2 Groove, 16 Bolt Ring Gear) AWD (With 33 Roller Bearing On Housing Side, 28 Rollers On Ring Gear Side)	1	
167715DC	Differential, U240 (80 Teeth, No Groove, 16 Bolt Ring Gear) AWD (With 33 Roller Bearing On Housing Side, 28 Rollers On Ring Gear Side)	1	

TOYOTA

© Whatever It Takes Transmission Parts. Inc.

167715FA ..... Differential, U250 (74 Teeth, 3 Groove, 12 Bolt Ring Gear)(27 Teeth Speed-O)(29 Roller Bearing On Bell Housing Side, 26 Roller On Ring Gear Side)(The 12 Bolt Ring Gear Has Only 10 Bolts In It) 1
167716A ..... Housing, U140 Differential (Less Ring Gear) (12 Bolt) No Speed-O (28 Roller Bearings On Both Sides) 1999-Up 1
167716D ..... Housing, U240 Differential (Less Ring Gear) 8 Bolt (25 Teeth Speed-O) 24 Rollers On Bell Side, 23 Rollers On Case Side 1999-Up 1
167716DA ..... Housing, U241 Differential (Less Ring Gear) 12 Bolt (27 Teeth Speed-O) 26 Roller Bearings On Both Sides 1999-Up 1
167716DB ..... Housing, U241 Differential (Less Ring Gear) (12 Bolt) (27 Teeth Speed-O) 29 Roller Bearing On Housing Side, 26 Rollers On Ring Gear Side 1999-Up 1
167716E ..... Housing, U151 Differential (Less Ring Gear) 16 Bolt (No Speed-O) 19 Roller Bearing On Both Sides 1999-Up 1
167716F ..... Housing, U250 Differential (Less Ring Gear) 8 Bolt (No Speed-O) (29 Roller Bearing On Housing Side & 26 Roller Bearing On Ring Gear Side) 1999-Up 1
167716FB ..... Housing, U250 Differential (Less Ring Gear) 8 Bolt (No Speed-O) (24 Roller Bearing On Housing Side & 23 Roller Bearing On Ring Gear Side) 1999-Up 1
167720A ..... Ring Gear, U140 Differential (74 Teeth, 4 Grooves) (12 Bolt) 1999-Up 1
167720D ..... Ring Gear, U240 Differential (78 Teeth, 5 Grooves) (8 Bolt) 1999-Up 1
167720DA ..... Ring Gear, U241 Differential (74 Teeth, 3 Grooves) (12 Bolt) 1999-Up 1
167720E ..... Ring Gear, U151 Differential (77 Teeth, 3 Grooves) (16 Bolt) 1999-Up 1
167720F ..... Ring Gear, U250 Differential (78 Teeth, No Grooves) (8 Bolt) 1999-Up 1
167720FA ..... Ring Gear, U250 Differential (78 Teeth, 3 Grooves) (8 Bolt) 1999-Up 1
167730A ..... Pinion Gear, U140 (28 Teeth, 4 Grooves) (3.325”OD) 1999-Up 1
167730AA ..... Pinion Gear, U140 (24 Teeth, 2 Grooves) (2.875”OD) 1999-up 1
167730D ..... Pinion Gear, U240/U250 (25 Teeth, No Groove) (2.800”OD) 1999-Up 1
167730DA ..... Pinion Gear, U241 (27 Teeth, 3 Grooves) (3.075”OD) 1999-Up 1
167730E ..... Pinion Gear, U151 (25 Teeth, 1 Groove) (3.015”OD) 2001-Up 1
167730EA ..... Pinion Gear, U151 (23 Teeth, No Groove) (2.765”OD) 2001-Up 1
167730F ..... Pinion Gear, U250 (23 Teeth, 3 Groove) (2.700”OD) 2001-Up 1
167740A ..... Valve Body, U140/U240/U241 (5 Solenoid)(Uses 2 Rubber Boot Seals To Case) 1999-05 1
167740A-1 ..... Valve Body, U140/U240/U241 (5 Solenoid)(Uses 2 Rubber Boot Seals To Case) 2006-12 1
167740AA ..... Valve Body, U140/U240/U241 (5 Solenoid)(With 3 Rubber Boot Seals To Case) 2000-05 1
167740AA-1 ..... Valve Body, U140/U240/U241 (5 Solenoid)(Uses 3 Rubber Boot Seals To Case) 2006-12 1
167740E ..... Valve Body, U150/U151/U250 (7 Solenoid)(4 Solenoids Are .840”OD, 3 Are .945”OD) (With 3 Accumulator Towers On Case Side) 2001-Up 1
167740EA ..... Valve Body, U150/U151/U250 (7 Solenoid)(4 Solenoids Are 1.108”OD, 3 Are .945”OD) (With 3 Accululator Towers On Case Side) 2001-Up 1

PART #	VALVE BODY COMPONENTS	QTY	REFERENCE #

S167741APK ..... Valve Kit, U140E/U140F/U151E/U151F/U240E/U241E/U250E Pressure Regulator (Oversized) (Sonnax)(Contains: Valve, Spring & End Plug)(Must Use T-F-57917E-TL16) 1
T-F-57917E-TL16 ..... Reamer/Jig/Guide Pin For S167741APK 1
A167741A-6K ..... End Plug Kit, U140/U240/U241 1999-Up (Contains: 6 Steel Plugs With O-Rings)(Superior) 1
S167741A-6K ..... End Plug Kit, U140E/U140F/U240E/U241E (Sonnax)(Contains: 6 Small End Plugs, 9 Small O-Rings, 1 Medium End Plug, 2 Medium O-Rings, 2 Large End Plugs & 3 Large O-Rings) 1
S167741A-ZK ..... Zip Kit, U140E/U240E (Sonnax)(Contains: S167741G-2K, S167741C-2K, S167741A-6K, S167741TDK, S167932AK & Check Balls) 1
S167741COK ..... Valve Kit, U140E/F/U151E/F /U240/U241/U250E Lockup Control (Oversized)(Contains: Lock Up Control Valve, Plunger Valve, & Sleeve)(Sonnax)(Must Use T-F-27741-TL25 Tool Kit) 1
T-F-27741-TL25 ..... Tool Kit, For S167741COK (Sonnax)(Contains Reamer, Jig, & Guide Pin)
S167741C-2K ..... Valve & Sleeve Assembly, U140E/U140F/U151E/U151F/U240E/U241E/U250E Lock-Up Control (Sonnax)(Contains: 1 Plunger Valve & 1 Sleeve) 1
S167741DK ..... Valve & Sleeve Assembly, U140E/U140F/U240E/U241E Solonoid Modulator (Sonnax) (Contains: 1 Valve, 1 Spring & 1 Sleeve)(Must Use T-F-57917E-TL13) 1
T-F-57917E-TL13 ..... Reamer/Jig Set, For S167741DK 1
A167741E-6K ..... End Plug Kit, U150/U151/U250 2001-Up (Contains: 7 Steel Plugs With O-Rings)(Superior) 1
S167741E-6K ..... End Plug Kit, U151E/U151F/U250E (Sonnax)(Contains: 4 Small End Plugs, 6 Small O-Rings, 1 Medium End Plug, 2 Medium O-Rings, 5 Large End Plugs & 7 Large O-Rings) 1
S167741E-ZK ..... Zip Kit, U150E/U250E (Sonnax)(Contains: S167741EUK, S167741EJK, S167741ETDK, S167741C-2K, S167932AK, S167741E-6K & Check Balls) 1
A167741ED-1 ..... Valve, U151 2-3 Shift Repair (Contains: 1 Direct Clutch Control Valve) 2004-08 (Transgo) 1
S167741EDK ..... Valve & Sleeve Assembly, U151/U151F/U250E Solenoid Modulator Valve (Contains: Valve, Spring & Sleeve) 2002-Up (Sonnax)(Must Use Tool # T-F-27741-TL13) 1
T-F-27741-TL13 ..... Tool For S167741EDK 1
S167741EHK ..... Valve Kit, U151E/U151F/U250E B3 Orifice Control (Oversized) 2002-Up (Contains: Valve And Spring)(Requires T-F-15741-TL18 & T-VB-Fix) 1
T-F-15741-TL18 ..... Tool Kit For S167741EHK & S265741LK (Contaisn: Reamer, Reamer Jig & Guide Pin) 1
S167741EJK ..... Valve & SLeeve Assembly, U151E/U151F/U250E B1 Apply Control Plunger 2002-Up (Sonnax) 1

TOYOTA

© Whatever It Takes Transmission Parts. Inc.

PART #	VALVE BODY COMPONENTS (Continued)	QTY	REFERENCE #
S167741EPK	Pressure Regulator & Boost Valve Assembly, U151E/U151F/U250E (Contains: Pressure Regulator Valve & Spring, Boost Valve, Sleeve & Plug)(Oversize) 2002-Up (Sonnax)(Must Use Tool # T-57917E-TL8)	1	
T-57917E-TL8	Reamer & Jig, For S167741PK and S167741EPK	1	
S167741ETDK	Boost Valve & Sleeve, U151E/U151F/U250E With Boost Valve Plug 2002-Up (Sonnax)	1	
S167741EUK	Valve & Sleeve Assembly, U151E/U151F/U250E B2 Apply Control Plunger 2002-Up (Sonnax)	1	
S167741G-2K	Valve & Sleeve Assembly, U140E/U140F/U240E/U241E Clutch Apply Control (Sonnax) (Contains: 1 Plunger Valve & 1 Sleeve)	1	
S167741GAK	Valve Kit, U151E/U151F/U250E Clutch Apply Control (Oversized) 2002-Up (Sonnax) (Contains: Valve, Spring & End Plug)(Requires T-F-27741-TL18 & T-VB-Fix)	1	
T-F-27741-TL18	Tool Kit For S167741GAK (Contains: Reamer, Reamer Jig & Guide Pin)	1	
S167741PK	Valve & Sleeve Assembly, U140E/U140F/U240E/U241E Pressure Regulator (Sonnax) (Contains: 1 Pressure Valve, 1 Pressure Spring, 1 Boost Valve, 1 Boost Valve Sleeve & 1 Plug)(Must Use T-57917E-TL8)	1	
T-57917E-TL8	Reamer & Jig, For S167741PK	1	
S167741TDK	Boost Valve & Sleeve, U140E/U241E (Sonnax)	1	

PART #	HARD PARTS (Continued)	QTY	REFERENCE #
167750A	Bell Housing, U140 (Open Starter Hole At 1:00) Cast # U140E By Speed-O (2.210"OD Axle Seal) 1999-Up	1	
167750AF	Bell Housing, U140F AWD (Open Starter Hole At 1:00) (2.910"OD Axle Seal) 1999-Up	1	
167750D	Bell Housing, U240 (Closed Starter Hump At 1:00) Cast # U240Z By Speed-O (2.175"OD Axle Seal) 1999-Up	1	
167750DA	Bell Housing, U241 (Open Starter Hole At 1:00) (Cast # U241E By Speed-O) (2.520"OD Axle Seal) (No Mount Holes Below Speed-O) 1999-Up	1	
167750E	Bell Housing, U151 (Open Starter Hole At 1:00) Cast # U151E By Speed-O (2.200"OD Axle Seal) 2001-Up	1	
167750F	Bell Housing, U250 (Open Starter Hole At 1:00) (Cast # U241 By Speed-O) (2.520"OD Axle Seal) (With 3 Mount Holes Below Speed-O) 1999-Up	1	
167750FA	Bell Housing, U250 (Open Starter Hole At 1:00) (Cast # U250 By Speed-O) (2.520"OD Axle Seal) (With 3 Mount Holes Below Speed-O) 2001-Up	1	
167759A	Rear Cover, U140 (Cast #1K) 11 Bolt (4 Bolt Mount) 1999-Up (Has No Tin 2 Bolt Oil Baffle)	1	
167759AA	Rear Cover, U140 (Cast #2K) 11 Bolt (4 Bolt Mount) 1999-Up (With A Tin 2 Bolt Oil Baffle)	1	
167759D	Rear Cover, U240 (11 Bolt) No Mounting Holes 1999-Up (Has No Tin 2 Bolt Oil Baffle)(The Ring Tower Sticks Up Above The Gasket Surface)	1	
167759D-A	Rear Cover, U240 (11 Bolts)(No Mounting Holes) 1999-Up (Has No Tin 2 Bolt Oil Baffle)(The Ring Tower Sets Below The Gasket Surface)	1	
167759DA	Rear Cover, U241 (U250 Some) 11 Bolt (1 Bolt Mounting Boss) 1999-Up (Has A Tin 2 Bolt Oil Baffle) (The Ring Tower Sticks Up Above The Gasket Surface)	1	
167759DAA	Rear Cover, U241 (11 Bolts)(1 Bolt Mounting Boss) 1999-Up (Has A Tin 2 Bolt Oil Baffle) (The Ring Tower Sets Below The Gasket Surface)	1	
167759DB	Rear Cover, U240 (11 Bolts) No Mounting Holes 1999-Up (Has A Tin 2 Bolt Oil Baffle) (The Ring Tower Sticks Up Above The Gasket Surface)	1	
167759DBA	Rear Cover, U240 (11 Bolts)(No Mounting Holes) 1999-Up (Has A Tin 2 Bolt Oil Baffle) (The Ring Tower Sets Below The Gasket Surface)	1	
167759E	Rear Cover, U151/(U250 Some) 11 Bolts (1 Bolt Mounting Boss)(Has No Tin 2 Bolt Oil Baffle) (3 Ring Tower) 2001-Up	1	
167759F	Rear Cover, U250(Some) 11 Bolts (No Mounting Bosses)(Has No Tin 2 Bolt Oil Baffle) (3 Ring Tower) 2001-Up	1	
167759FA	Rear Cover, U250(Some) 11 Bolts (1 Bolt Mounting Boss)(Has No Tin 2 Bolt Oil Baffle) (3 Ring Tower Sets 1/2 Below The Gasket Surface)	1	
167760A	Case, U140 (Cast # U140 On Top) Uses 2 Rubber Boot Seals Valve Body To Case 1999-Up	1	
167760AA	Case, U140 (Cast # U140 On Top) Uses 3 Rubber Boot Seals Valve Body To Case 1999-Up	1	
167760AC	Case, U140 AWD (Cast # 9180 On Side Of Case Above Accumulator)(Uses 2 Rubber Boot Seals Valve Body To Case) 1999-Up	1	
167760AD	Case, U140 AWD (Cast # 9184 On Side Of Case Above Accumulator)(Uses 2 Rubber Boot Seals Valve Body To Case) 1999-Up	1	
167760D	Case, U240 (Cast # U240 On Top) Uses 3 Rubber Boot Seals Valve Body To Case 1999-Up	1	
167760DA	Case, U241 (Cast # U241 On Top) Uses 2 Rubber Boot Seals Valve Body To Case 1999-Up	1	
167760E	Case, U151 (Uses A 3.138"OD Axle Seal) Uses 2 Rubber Boot Seals Valve Body To Case 2001-Up	1	
167760F	Case, U250 (Cast # U250 On Top) Uses 2 Rubber Boot Seals Valve Body To Case 1999-Up	1	
167765A	Pan, U140/U240 Bottom (18 Bolts With 8 Bottom Ribs) 1999-Up	1	
167765DA	Pan, U241/U250 Bottom (18 Bolts With 7 Bottom Ribs) (The 3 Short Ribs Are On A Flat Bottom) 1999-Up	1	
167765E	Pan, U151 Bottom (18 Bolt With 7 Bottom Ribs) (The 3 Short Ribs Are On A Sloped Bottom) 2001-Up	1	

TOYOTA

© Whatever It Takes Transmission Parts. Inc.

167776AK.....Bolt Set, U140/U151/U240/U241/U250 Bell To Case (16 Pieces) 1999-Up .....1 .....
167777AK.....Bolt Set, U140/U151/U240/U241/U250 Stator To Case (7 Pieces) 1999-Up.....1 .....
167778AK.....Bolt Set, U140/U151/U240/U241/U250 Stator To Body (11 Pieces) 1999-Up .....1 .....
167779AK.....Bolt Set, U140/U151/U240/U241/U250 Pan (18 Pieces) 1999-Up .....1 .....
167780AK.....Bolt Set, U140/U151/U240/U241/U250 Rear Cover (11 Pieces) 1999-Up .....1 .....
167782AK.....Bolt Set, U140/U240/U241/U250 Valve Body To Case (19 Pieces) 1999-Up .....1 .....
167782EK.....Bolt Set, U151/U250 Valve Body To Case (20 Pieces) 2001-Up .....1 .....
167795A .....Nut, U140/U151/U240/U241/U250 Holds Output Planet To Drive Gear (9 Notches) 1999-Up.....1 .....
167796A .....Nut, U140/U151/U240/U241/U250 Underdrive Planet Shaft (Pinion) 1999-Up .....1 .....
T-2700AC .....Spanner Socket, U140/U151/U240/U241/U250 Fits Nut # 795 & Nut # 796 (Adapt-A-Case) .....1 .....
167847D .....Gear, U240 Speed-O (25 Teeth, Yellow) (Plastic) 1999-Up .....1 .....
167847DB.....Gear, U241 Speed-O (27 Teeth, Black) (Plastic) 1999-Up.....1 .....
167860E .....Snap Ring, U151/U250 Holds Overdrive Pressure Plate In (.064" Thick)(6 1/2"OD) 2001-Up.....1 .....
167861A .....Snap Ring, U140/U151 Holds Underdrive Clutch #1 Pressure Plate In (5.215"OD) 1999-Up
.....(Also Fits U140/U151 Underdrive Clutch #2) .....1 .....
167861D .....Snap Ring, U240/U241/U250 Holds Underdrive Clutch #1 Pressure Plate In (4.760"OD) 1999-Up
.....(Also Fits U240/U241/U250 Underdrive Clutch #2) .....1-2.....
167862A .....Snap Ring, U140/U151/U240 Holds Underdrive Clutch #1 Spring Retainer In 1999-Up.....1 .....
167862D .....Snap Ring, U241/U250 Holds Underdrive Clutch #1 Spring Retainer In 1999-Up .....1 .....
167863A .....Snap Ring, U140/U151 Holds Sprag Outer Race In Case (5.265"OD) Ends Are Flat 1999-Up .....1 .....
167863D .....Snap Ring, U240/U241/U250 Holds Sprag Outer Race In Case (5.050"OD) Ends Are Bent
.....1999-Up .....1-2.....
167864A .....Use 167861A.....1 .....
167864D .....Use 167861D .....1 .....
167865A .....Snap Ring, U140/U151/U240/U241/U250 Holds Underdrive Clutch #2 Retainer In 1999-Up.....1 .....
167872A .....Snap Ring, U140/U151/U240/U241/U250 2nd Brake Clutch (Bottom) (.102" Thick)(7 5/8"OD)
.....1999-Up .....1 .....
167873A .....Snap Ring, U140/U151/U240/U241/U250 Holds 2nd Brake Clutch Pressure Plate In (.062" Thick)
.....(7 1/4"OD) 1999-Up .....1 .....
167874A .....Snap Ring, U140/U151/U240/U241/U250 Holds 2nd Brake Clutch Retainer In Housing 1999-Up 1 .....
167876A .....Snap Ring, U140/U151/U240/U241/U250 Holds Forward Clutch Pressure Plate In Drum
.....1999-Up .....1 .....
167877A .....Snap Ring, U140/U150/U240/U241/U250 Holds Forward Clutch Retainer In 1999-Up .....1 .....
167878A .....Snap Ring, U140/U151/U240/U241/U250 Holds Pressure Plate In Direct Drum (.061" Thick)
.....(6 5/8"OD) 1999-Up .....
167879A .....Snap Ring, U140/U240/U241/U250 Holds Direct Clutch Retainer In (.046" Thick) (1.765"OD)
.....1999-Up .....1 .....
167879E .....Snap Ring, U151/U250 Holds Direct Clutch Retainer In (.054" Thick)(1.425"OD) 1999-Up.....1 .....
167885A .....Snap Ring, U140/U151/U240/U241/U250 Holds Low/Reverse Clutch In (.059" Thick)(7 1/4"OD)
.....1999-Up .....1 .....
167886A .....Snap Ring, U140/U240/U250 Holds Forward Planet To Hub #577 (.062" Thick)(4.775"OD)
.....1999-Up 1 90080-52132
167886E .....Snap Ring, U151/U241 Holds Forward Planet To Hub #577 (.062" Thick)(4.775"OD)
.....(With Hooked Ends) 1999-Up .....1 .....
167889A .....Snap Ring, U140/U151/U240/U241/U250 Holds Output Ring Gear # 594 In The Low/Reverse
.....Clutch Hub #577 (.063" Thick) (5.395"OD) 1999-Up .....1 .....
167893A .....Snap Ring, U140/U151/U240/U241/U250 Holds Low/Reverse Clutch Retainer In 1999-Up.....1 .....
167898A .....Snap Ring, U140/U151/U240/U241/U250 Goes Between #278 & #250 In Case 1999-Up 1 90080-52128
167899A .....Snap Ring, U140/U151 Holds Underdrive Planet Ring Gear To Driven Transfer Gear
.....(.083" Thick)(5.630"OD) 1999-Up .....1 .....
167899D .....Snap Ring, U240/U241/U250 Holds Underdrive Planet Ring Gear To Driven Transfer Gear
.....(.087" Thick)(5.170"OD) 1999-Up .....1 .....
167925A .....Accumulator Assembly, U140/U240/U241 C-1 Accumulator (Front) 1999-Up .....1 .....
A167932AK ....Accumulator Piston Set, U140/U150/U151/U240/U241/U250 (In Valve Body)(Contains: 6 Pistons
.....With Dual Rings & A Bore Brush)(Will Fix 2 Or 3 Transmissions)(Superior).....1 .....
S167932AK ....Accumulator Piston Assembly, U140/U150/U151/U240/U241/U250 (In Valve Body)
.....(Contains: 1 Piston & 2 O-Rings)(Sonnax) .....1 .....
167945A .....Accumulator Assembly, U140/U240/U241 C-3 Accumulator (Middle) 1999-Up.....1 .....
167950A .....Accumulator Assembly, U140/U240/U241 B-3 Accumulator (Rear) 1999-Up.....1 .....
167956A .....Housing, U140/U151/U240/U241/U250 2nd Brake Clutch (Aluminum) 13 Outer Lugs 1999-Up ...1 .....
167960A .....Piston, U140/U151 Underdrive Clutch #1 (Bonded) (2.120"ID) 1999-Up .....1 .....
167960AK.....Piston Kit, U140 (Bonded) (Contains: 1 #960, 1 #980, 1 #965 & 1 #985) 1999-Up.....1 .....
167960AK-1....Piston Kit, U140/U151 (Bonded) (Contains: 1 #960, 1 # 980) # 960 (4.455"OD)(2.120"ID)
.....(.985"Thick)(.475"Thick Edge) # 980 (4.190"OD)(4Tabs)(2.136"ID)(.879"Thick) 1999-Up .....1 .....
167960D .....Piston, U240/U241/U250 Underdrive Clutch #1 (Bonded) (1.945"ID) 1999-Up.....1 .....
167960DK.....Piston Kit, U240/U241/U250 (Bonded) Underdrive Clutch (Contains: 1-#960, 1-#965, 1-#964,
.....1-#980, 1-#984, & 1-#985) 1999-Up .....1 .....
167960DK-1 ...Piston Kit, U240/U241/U250 (Bonded) Underdrive Clutch (Contains: 1-#960 & 1-#980) 1999-Up
.....# 960 (4.408"OD)(1.947"ID)(.675"Thick)(.500"Thick Edge) # 980 (4.160"OD)(3Tabs)(1.960"ID)
.....(.675"Thick).....1 .....

© Whatever It Takes Transmission Parts. Inc.

PART #	HARD PARTS (Continued)	QTY	REFERENCE
167960EK	Piston Kit, U150/U151 (Bonded) (Contains: One #960, One #963, One #964, One #980, One #984, And One #985) 2001-Up	1	
167960FK	Piston Kit, U250 (Contains: 6 Pistons) 2005-Up	1	
167961A	Piston, U140/U151/U240/U241/U250 Underdrive Clutch #2 (Aluminum)(4.375"OD)(2.486"ID) 1999-Up	1	
167962A	Piston, U140/U240 2nd Brake Clutch (Aluminum) (.770" Thick) 1999-Up	1	
167962AA	Piston, U140/U240 2nd Brake Clutch (Aluminum) (.740" Thick) 1999-Up	1	
167962D	Piston, U241/U250 2nd Brake Clutch (Aluminum) (.927" Thick) 1999-Up	1	
167962DA	Piston, U240/U241 2nd Brake Clutch (Aluminum) (.750" Thick) 1999-Up	1	
167962DB	Piston, U240/U241 2nd Brake Clutch (Aluminum) (.890" Thick) 1999-Up	1	
167962E	Piston, U151 2nd Brake Clutch (Aluminum) (.790" Thick) 1999-Up	1	
167963E	Piston, U151/U250 Overdrive Clutch (Bonded) (.705" Thick) (5.625"OD) (2.095"ID) 2001-Up	1	
167964A	Piston, U140/U240/(U250 Some) Forward Clutch (Aluminum) 1999-Up	1	
167964D	Piston, U151/U240/U241/(U250 Some) Forward Clutch (Bonded) 1999-Up	1	
167964DK	Piston Kit, U151/U240/U241 (Bonded) Forward Clutch (Contains: 1 #964, 1 #984) 1999-Up	1	
167965A	Piston, U140/U240/U241/U250 Direct Clutch (Bonded)(6 3/16"OD)(2.077"ID) 1999-Up	1	
167965AHPK	Piston Kit, U140/U240/U241/U250 Direct Clutch (Bonded) 1999-Up (Hi-Per Blue)	1	
167965AK	Piston Kit, U140/U240/U241/U250 Direct Clutch (Bonded) 1999-Up (Contains: 1 #965, 1 #985) # 965 (6.175"OD)(2.067"ID) (.825"Thick) # 985 (4.538"OD)(1.622"ID)(4Tabs)(.625"Thick) (20 Spring)	1	
167965E	Piston/Housing, U151/U250 Direct Clutch (Bonded) (6 1/2"OD)(1.708"Tall)(Uses An Inner O-Ring)(This Is Also The Overdrive Clutch Housing) 2001-Up (Uses 4 Overdrive Clutches)	1	
167965EA	Piston/Housing, U151/U250 Direct Clutch (Bonded)(6 1/2"OD)(1.708" Tall)(Uses An Inner O-Ring)(This Is Also The Overdrive Clutch Housing) 2001-Up (Uses 3 Overdrive Clutches)	1	
167967A	Piston, U140 Low/Reverse Clutch (Aluminum) (.551" Thick At Edge) 1999-Up	1	
167967D	Piston, U240/U241/U250 Low/Reverse Clutch (Aluminum) (.850" Thick At Edge) 1999-Up	1	
167967E	Piston, U151 Low/Reverse Clutch (Aluminum) (.690" Thick At Edge) 1999-Up	1	
167970A	Springs, U140/U151 Underdrive Clutch #1 Return (16 Springs) 1999-Up	1	
167970D	Springs, U240/U241/U250 Underdrive Clutch #1 Return (18 Springs) 1999-Up	1	
167971A	Springs W/Retainer, U140/U151/U240/U241/U250 Underdrive Clutch #2 (24 Springs) 1999-Up	1	
167972A	Retainer W/Springs, U140/U151/U240/U241/U250 2nd Brake Clutch 1999-Up	1	
167974A	Retainer W/Springs, U140/U240/(U250 Some) Forward Clutch Return (2.270"ID) 1999-Up	1	
167974D	Retainer W/Springs, U151/U241/(U250 Some) Forward Clutch Return (2.970"ID) 1999-Up	1	
167975A	Springs, U140/U240/U241/U250 Direct Clutch Return (20 Springs) 1999-Up	1	
167975A	Springs, U151/U250 Direct/Overdrive Clutch Return (22 Springs) 2001-Up	1	
167977A	Retainer W/Springs, U140/U151/U240/U241/U250 Low/Reverse Clutch Return 1999-Up	1	
167980A	Retainer, U140/U151 Underdrive Clutch #1 Spring (Bonded) (4.200"OD) 1999-Up	1	
167980D	Retainer, U240/U241/U250 Underdrive Clutch #1 Spring (Bonded) (4.160"OD) 1999-Up	1	
167984D	Retainer, U151/U240/U241/(U250 Some) Forward Clutch Spring (Bonded) 1999-Up	1	
167985A	Retainer, U140/U240/U241/(U250 some) Direct Clutch Spring (Bonded)(4.540"OD)(1.588"ID) 1999-Up	1	
167985E	Retainer, U151/U250 Overdrive Clutch Spring (Bonded) (4.775"OD)(1.335"ID) 2001-Up	1	
167991A	Linkage Assembly, U140/U151/U240/U241/U250 Internal 1999-Up	1	
167991A-8	Sleeve, U140/U151/U240/U241/U250 Holds Pin In That Keeps The Rooster Comb To The Shift Lever Shaft	1	
167992A	Shift Lever, U140/U151/U240/U241/U250 External (Cast #A) 1999-Up	1	
167995A	Park Pawl Assembly, U140/U151 (Uses A .471"OD Pin) 1999-Up	1	
167995D	Park Pawl Assembly, U240/U241/U250 (Uses A .463"OD Pin) 1999-Up	1	
167996A	Cooler Line Fitting, U140/U151/U240/U241/U250 (Elbow) 1999-Up	1	
176996AA	Cooler Line Fitting, U140/U151/U240/U241/U250 (Straight) 1999-Up	1	
167999A	Oil Tube, U140/U151 Differential Bearing (4 3/8" Long) 1999-Up	1	
167999AC	Oil Tube Set, U140/U240 (Rear Case) (2 Tubes, Long Tube Is 7 1/8" Long) 1999-Up	1	
167999D	Oil Tube, U240/U241/U250 Differential Bearing (4 3/4" Long) 1999-Up	1	
167999EC	Oil Tube Set, U151/U241/U250 (Rear Case) (2 Tubes, Long Tube Is 6 7/8" Long) 1999-Up	1	

© Whatever It Takes Transmission Parts. Inc.

© Whatever It Takes Transmission Parts. Inc.

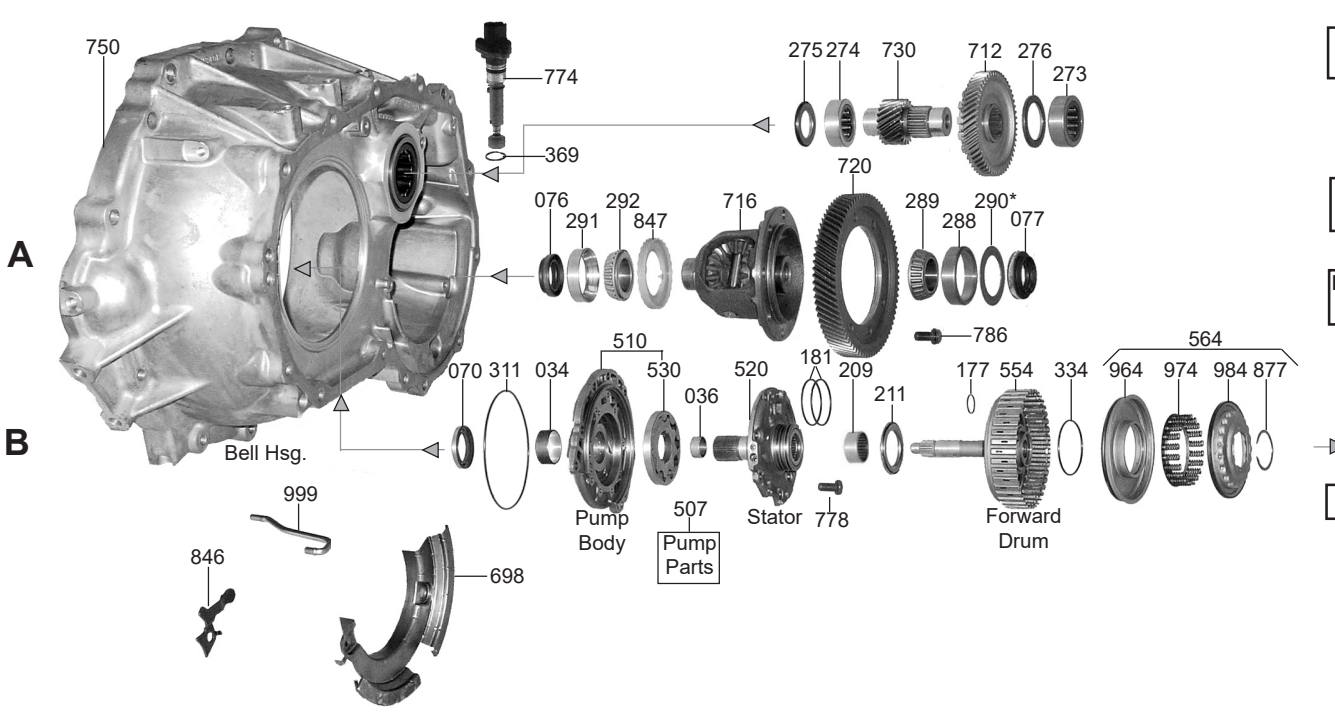

000 Paper & Rubber Kit

002 Overhaul Kit

004 Master L/Steels Kit

006 Master W/Steels Kit

030 Bushing Kit

119 Friction Module

139 Steel Module

420 Solenoid Kit

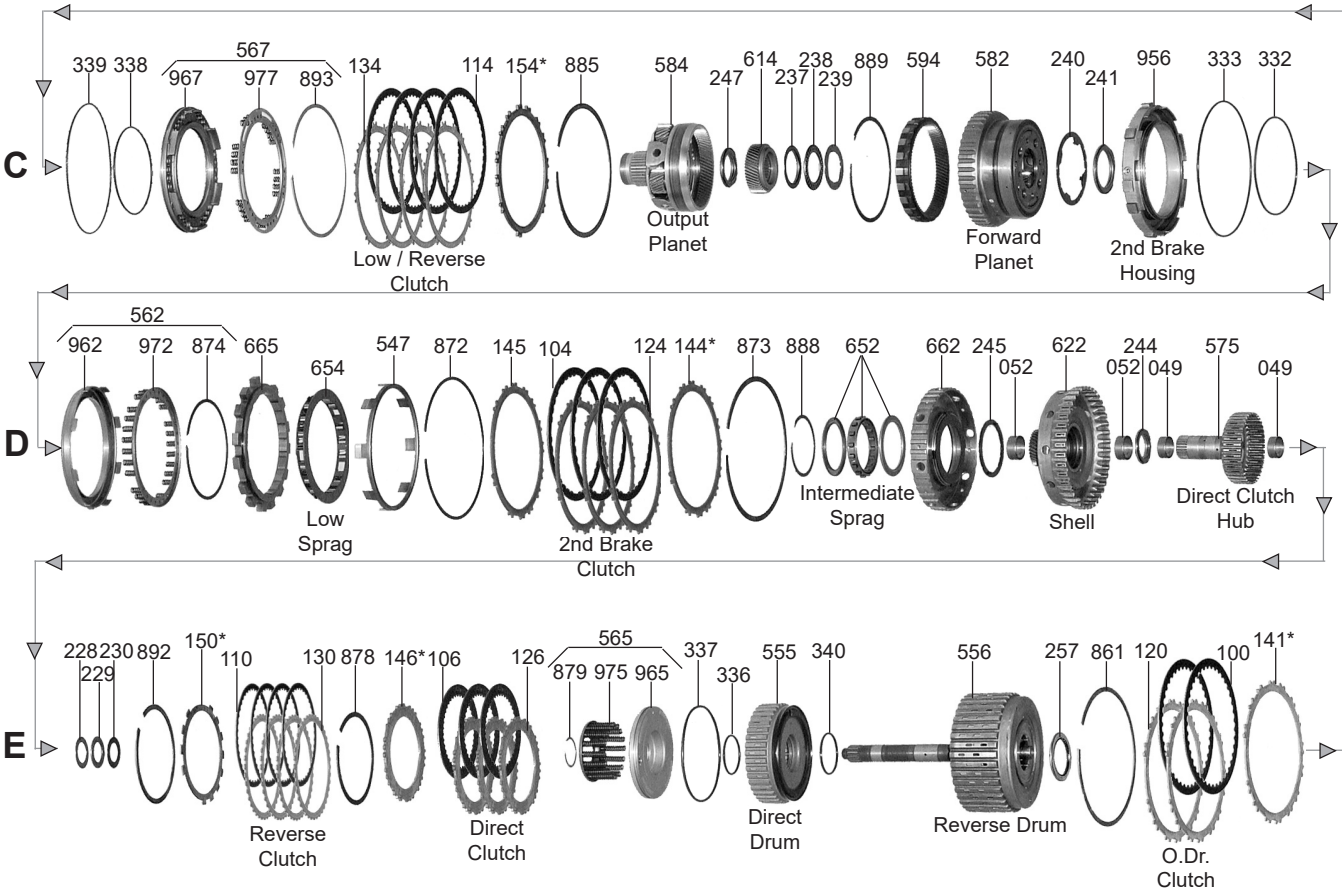

TOYOTA

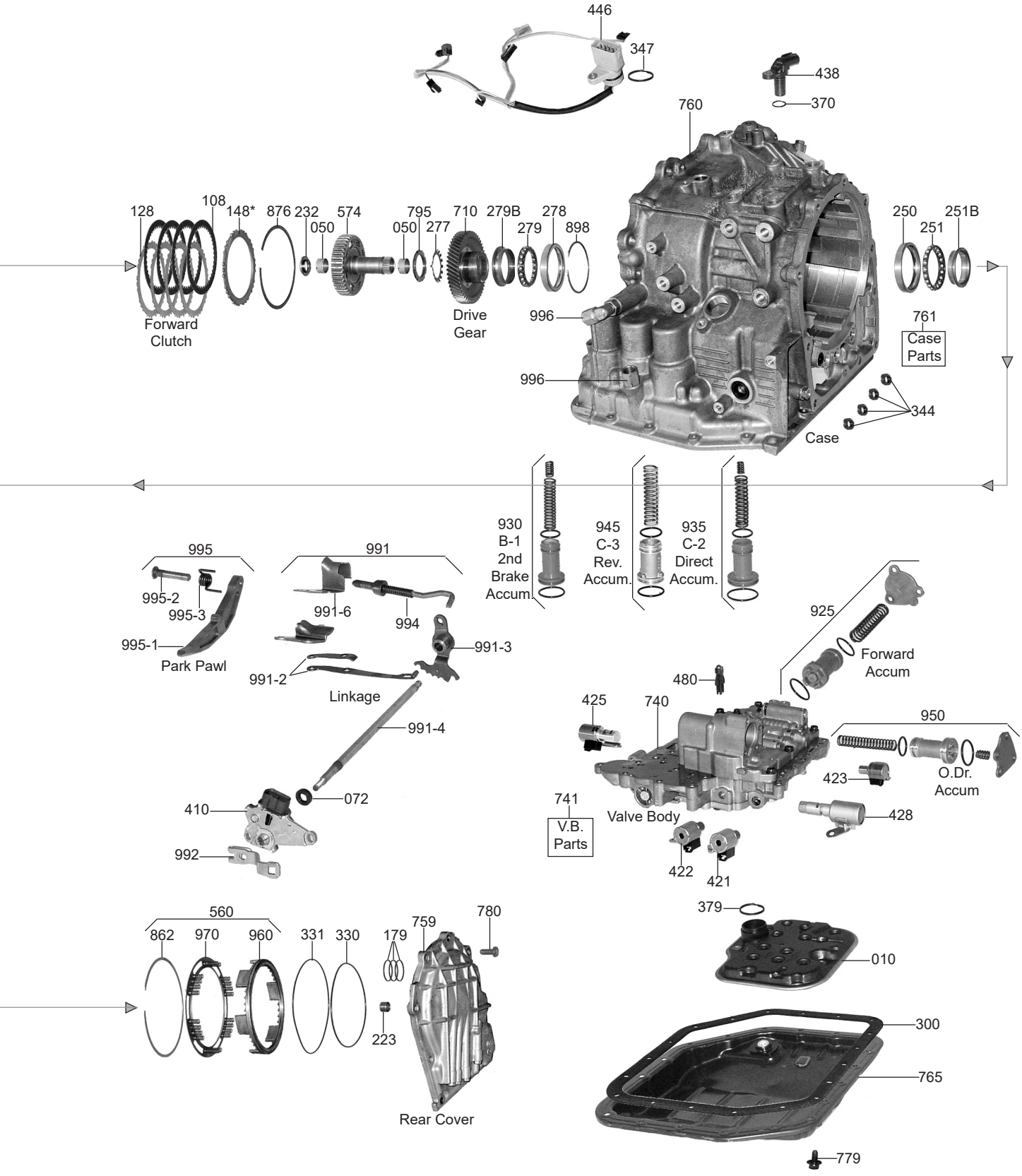

A

B

C

D

E

TOYOTA

© Whatever It Takes Transmission Parts. Inc.

PART #	PAPER & RUBBER KIT	QTY.	REFERENCE #
127000A	Paper & Rubber Kit, U340E/U341E/U341F (Toyota) Without Bonded Pistons 1999-Up	1	
127001A	Sub Kit, U341F Transfer Case Parts 2000-Up	1	

PART #	OVERHAUL KIT	QTY	REFERENCE #
127002A	Overhaul Kit, U340E/U341E/U341F 1999-Up (For Bonded Pistons Sell 127964AK)	1	

PART #	MASTER L/STEELS KIT	QTY	REFERENCE #
127004A	Master L/Steels Kit, U340E/U341E/U341F 1999-Up (For Bonded Pistons Sell 127964AK)	1	

PART #	MASTER W/STEELS KIT	QTY	REFERENCE #
127006A	Master W/Steels Kit, U340E/U341E/U341F 1999-Up (For Bonded Pistons Sell 127964AK)	1	

PART #	FILTERS	QTY	REFERENCE #
127010A	Filter, U340E/U341E/U341F (Toyota) 4 Speed FWD/AWD 1999-Up	1	
127018A	Filter, U340E/U341E/U341F Inside Valve Body (W/O-Ring)	1	

PART #	BUSHINGS	QTY	REFERENCE #
127030A	Bushing Kit, U340E/U341E/U341F 2000-Up	1	
127034A	Use 57034A	1	
57034A	Bushing, A340 Pump Body	1	
127036A	Bushing, U340E/U341E/U341F Stator (Front) 1999-Up	1	
127049A	Bushing, U340E/U341E/U341F Direct Clutch Hub (Takes 2) 1999-Up	2	
127050A	Bushing, U340E/U341E/U341F Forward Clutch Hub (Takes 2) 1999-Up	2	
127052A	Bushing, U340E/U341E/U341F Shell (Takes 2) 1999-Up	2	

PART #	METAL CLAD SEALS	QTY	REFERENCE #
127070A	Seal, U340E/U341E/U341F Front (Pump) 1999-Up	1	
203070A	Seal, U341F Transfer Case Seal	1	
127072A	Seal, U340E/U341E/U341F Linkage 1999-Up	1	
127076A	Seal, U340E/U341E Axle (Bell Housing Side) (2.175"OD) 1999-Up	1	
127077A	Seal, U340E/U341E/U341F Axle (Case Side) (2.255"OD) 1999-Up	1	

PART #	FRICTION CLUTCH	QTY	REFERENCE #
127100A	Friction, U340E/U341E/U341F Overdrive Clutch (.071") 40 Teeth (6.325"OD) 1999-Up	2	
127104A	Friction, U340E/U341E/U341F 2nd Brake Clutch (.071") 32 Teeth 1999-Up	3	
127106A	Friction, U340E/U341E/U341F Direct Clutch (.071") 40 Teeth (4.370"OD) 1999-Up	3	
127108A	Friction, U340E/U341E/U341F Forward Clutch (.071") 40 Teeth (5.100"OD) Starburst 1999-Up	4	
127110A	Friction, U340E/U341E/U341F Reverse Clutch (.073") 32 Teeth (4.590"OD) 1999-Up	2-3	
127114A	Friction, U340E/U341E/U341F Low/Reverse Clutch (.071") 43 Teeth (6.035"OD) 1999-Up	4	
127119A	Friction Module, U340E/U341E/U341F 1999-Up	1	

PART #	STEEL CLUTCH	QTY	REFERENCE #
127120A	Steel, U340E/U341E/U341F Overdrive Clutch (.118") 15 Teeth (5.650"ID) 1999-Up	2	
127124A	Steel, U340E/U341E/U341F 2nd Brake Clutch (.078") 13 Teeth 1999-Up	3	
127124B	Steel, U340E/U341E/U341F 2nd Brake Clutch (.118") 13 Teeth 1999-Up	3	
	(Also Fits U340E/U341E/U341F 2nd Brake Clutch Pressure Plate (Rear) #144)	3-4	
127126A	Steel, U340E/U341E/U341F Direct Clutch (.119") 30 Teeth (3.385"ID) 1999-Up	3	
127128A	Steel, U340E/U341E/U341F Forward Clutch (.075") 30 Teeth (4.265"ID) 1999-Up	4	
127130A	Steel, U340E/U341E/U341F Reverse Clutch (.070") 30 Teeth (3.870"ID) 1999-Up	2-3	
127134A	Steel, U340E/U341E/U341F Low/Reverse Clutch (.070") 13 Teeth (5.400"ID) 1999-Up	4	
127139A	Steel Module, U340E/U341E/U341F 1999-Up	1	

PART #	PRESSURE PLATES	QTY	REFERENCE #
127141A	Apply Plate, U340E/U341E/U341F Overdrive Clutch (Bottom)(5.660"ID)(Selective) 1999-Up	1	
127144A	Use 127124B	1	
127144AA	Apply Plate, U340E/U341E/U341F Overdrive Clutch (Bottom) Selective (5.660"ID) 1999-Up	1	
127145A	Apply Plate, U340E/U341E/U341F 2nd Brake Clutch (.126") 13 Teeth 1999-Up	1	
127146AA	Pressure Plate, U340E/U341E/U341F Direct Clutch (Selective) 30 Teeth (3.045"ID) 1999-Up	1	
127148AA	Pressure Plate, U340E/U341E/U341F Forward Clutch (Top) Selective (30 Teeth) 1999-Up	1	

© Whatever It Takes Transmission Parts. Inc.

127150AA.....Pressure Plate, U340E/U341E/U341F Reverse Clutch (Top) Selective 1999-Up.....1 .....
127154AA.....Pressure Plate, U340E/U341E/U341F Low/Reverse Clutch (.142") Cast # 1 (13 Teeth)
.....1999-Up .....1 .....

PART #	SEALING RINGS	QTY	REFERENCE #

127175AT .....Ring Kit, U340E/U341E/U341F (Teflon) 1999-Up .....1 .....
127177AT .....Ring, U340E/U341E/U341F Forward Clutch (Input Shaft) (Teflon) 1999-Up .....1 .....
127179AT .....Ring, U340E/U341E/U341F Reverse Clutch Drum (In Rear Cover) Teflon 1999-Up .....3 .....
127181AT .....Ring, U340E/U341E/U341F Stator Shaft (Takes 2) Teflon 1999-Up.....2 .....

PART #	WASHERS & BEARINGS	QTY	REFERENCE #

127209A .....Caged Needle Bearing, U340E/U341E/U341F Stator (Rear) 1.235"OD 1999-Up.....1 .....
127211A.....Bearing W/Races, U340E/U341E/U341F Stator To Forward Drum (1.700"OD) 1999-Up .....1 .....
127223A .....Caged Needle Bearing, U340E/U341E/U341F (Presses Into Rear Cover) 1999-Up .....1 .....
127228A .....Race, U340E/U341E/U341F Direct Clutch Hub To Direct Drum (Front) 1999-Up .....1 .....
127229A .....Bearing, U340E/U341E/U341F Direct Clutch Hub To Direct Drum (1.455"OD) 1999-Up .....1 .....
127230A .....Race, U340E/U341E/U341F Direct Clutch Hub To Direct Drum (Rear) 1999-Up.....1 .....
127232A .....Bearing W/Races, U340E/U341E/U341F Forward Drum To Hub (1.364"OD) 1999-Up .....1 .....
127237A .....Race, U340E/U341E/U341F Output Planet Sun Gear To Forward Planet (Front) 1999-Up.....1 .....
127238A .....Bearing, U340E/U341E/U341F Output Planet Sun Gear To Forward Planet 1999-Up.....1 .....
127239A .....Race, U340E/U341E/U341F Output Planet Sun Gear To Forward Planet (Rear) .032" Thick
.....(Center Hole Is Squared Off) 1999-Up.....1 .....
127240A .....Washer, U340E/U341E/U341F Forward Planet To 2nd Brake Clutch Hub (4 Tab, Plastic)
.....(.060" Thick) 1999-Up .....1 .....
127241A .....Bearing W/Races, U340E/U341E/U341F Forward Planet To #1 Sprag 1999-Up.....1 .....
127244A .....Bearing W/Races, U340E/U341E/U341F Shell To Direct Clutch Hub (1.740"OD) 1999-Up.....1 .....
127245A .....Washer, U340E/U341E/U341F #1 Sprag Outer Race To Shell (2 Tab, Plastic) .092" Thick
.....1999-Up .....1 .....
127247A .....Bearing W/Races, U340E/U341E/U341F Output Planet To Sun Gear 1999-Up .....1 .....
127250A .....Use 127278A.....1 .....
127250C .....Use 127278C .....1 .....
127250CA.....Use 127278CA.....1 .....
127251A .....Use 127279A.....1 .....
127251B .....Use 127279B .....1 .....
127251C .....Use 127279C .....1 .....
127251CA.....Use 127279CA.....1 .....
127257A .....Bearing W/Races, U340E/U341E/U341F Reverse Drum To Rear Cover 1999-Up .....1 .....
127273A .....Caged Needle Bearing, U340E/U341E/U341F Pinion Shaft To Case (VP35-5) 1999-Up .....1 .....
127274A .....Caged Needle Bearing, U340E/U341E/U341F Pinion To Bell Housing (NQ356520) 1999-Up .....1 .....
127275A .....Bearing W/Races, U340E/U341E/U341F Pinion To Bell Housing (1.555"OD) 1999-Up.....1 .....
127276A .....Bearing W/Races, U340E/U341E/U341F Driven Transfer Gear To Case 1999-Up.....1 .....
127277A .....Washer, U340E/U341E/U341F Output Drive Gear To Output Planet 1999-Up (Under Nut).....1 .....
127278A .....Cup Race, U340E/U341E/U341F Output Gear To Case (R52Z-5 NSX) 1999-Up (3.388"OD)
.....(.492" Thick) (Goes With 127279A Cone Bearing) Also Fits U340E/U341E/U341F Output Planet
.....To Case #250A.....1-2.....
127278C .....Outer Race, U340E/U341E/U341F Output Gear To Case (BA52Z-2 NSX) (3.388"OD)
.....(.510" Thick) 1999-Up (Goes With 127279C Bearing) (Also Fits U340E/U341E/U341F
.....Output Planet To Case #250C) .....1 .....
127278CA.....Outer Race, U340E/U341E/U341F Output Gear To Case (BA52Z-1 NSX) (3.388"OD)
.....(.490" Thick) 1999-Up (Goes Wirh 127279CA Bearing) (Also Fits U340E/U341E/U341F
.....Output Planet To Case #250CA).....1 .....
127279A .....Cone Bearing, U340E/U341E/U341F Output Gear To Case (R52Z-5 NSX) 1999-Up (28 Rollers)
.....(2.061"ID) With Inner Race (Goes With 127278A) (Also Fits U340E/U341E/U341F Output
.....Planet To Case #251).....1-2.....
127279B .....Inner Race, U340E/U341E/U341F Bearing #279C To Output Gear (2.643"OD) (2.061"ID) Fits
.....Bearing #127279C With 17 Balls 1999-Up (Also Fits U340E/U341E/U341F Output
.....Planet To Bearing #251).....1 .....
127279BA.....Inner Race, U340E/U341E/U341F Bearing #279CA To Output Gear (2.565"OD) (2.061"ID)
.....Fits Bearing #127279CA With 20 Balls 1999-Up (Also Fits U340E/U341E/U341F Output
.....Planet To Bearing #251).....1 .....
127279C .....Ball Bearing, U340E/U341E/U341F Output Gear To Case (17 Balls) Plastic Cage 1999-Up
.....(Goes With Races #127278C & # 127279B) (Also Fits U340E/U341E/U341F Output Planet
.....To Case #251C) .....1 .....
127279CA.....Ball Bearing, U340E/U341E/U341F Output Gear To Case (20 Balls) (Plastic Cage) 1999-Up
.....(Goes With Races #127278CA & #127279BA) (Also Fits U340E/U341E/U341F Output
.....Planet To Case #251CA).....1 .....
127288A .....Cup Race, U340E/U341E/U341F Differential Bearing To Case (44KB721) 2.835"OD 1999-Up ....1 .....

TOYOTA

© Whatever It Takes Transmission Parts. Inc.

PART #	WASHERS & BEARINGS (Continued)	QTY	REFERENCE #
127289A	Cone Bearing, U340E/U341E/U341F Differential To Case (44KB721) 1.731"ID (23 Rollers) 1999-Up	1	
127290AA	Shim, U340E/U341E/U341F Differential To Case (Selective) 2.825"OD 1999-Up	1	
127291A	Cup Race, U340E/U341E Differential To Bell Housing (TRA080702) 2.678"OD (2WD Only) 1999-Up	1	
127291B	Cup Race, U341F (AWD) Differential To Bell (KOYO ST5076)(2.993"OD)(AWD Only) 1999-Up	1	
127292A	Cone Bearing, U340E/U341E Differential To Bell Housing (TRA080702) 1.575"ID (24 Rollers) 1999-Up	1	
127292B	Cone Bearing, U341F (AWD) Differential To Bell (27 Rollers) 1999-Up	1	

PART #	GASKETS & RUBBER COMPONENTS	QTY	REFERENCE #
127300A	Gasket, U340E/U341E/U341F Bottom Pan (19 Bolt) 1999-Up	1	
127311A	O-Ring, U340E/U341E/U341F Pump Body 1999-Up	1	
127344A	Seals, U340E/U341E/U341F Rear Cover To Case & Valve Body (Front) (Takes 5) 1999-Up	5	

PART #	ELECTRICAL COMPONENTS	QTY	REFERENCE #
127410A	Switch, U340E/U341E/U341F PRNDL 1999-Up	1	
127420A	Solenoid Kit, U340E (5 Solenoids) 1999-Up	1	
127420B	Solenoid Kit, U341E/U341F (5 Solenoids) 1999-Up	1	
127421A	Solenoid, U340E/U341E/U341F #1 Shift 1999-Up	1	
127422A	Solenoid, U340E/U341E/U341F #2 Shift 1999-Up	1	
127423A	Solenoid, U340E/U341E/U341F #3 Shift 1999-Up	1	
127425A	Solenoid, U340E/U341E/U341F TCC (Lock-Up) 1999-Up	1	
127428A	Solenoid, U340E EPC (Echo Scion Only) 1999-02	1	
127428B	Solenoid, U341E/U341F EPC 1999-Up	1	
127438A	Sensor, U340E/U341E/U341F Input Speed (TSS) 1999-Up	1	
127446A	Wire Harness, U340E/U341E/U341F (8 Pin Case Connector) 1999-Up (4 One Wire Connectors And 2 Two Wire Connectors)	1	

PART #	MISCELLANEOUS COMPONENTS	QTY	REFERENCE #
127480A	Plunger W/Ball, U340E/U341E/U341F (Sets In Case Under Valve Body) 1999-Up	1	

PART #	HARD PARTS	QTY	REFERENCE #
127500A	Pump Complete, U340E/U341E/U341F (7 Bolts To Case) 1999-Up	1	
127500AA	Pump Complete, U340E/U341E/U341F (6 Bolts To Case) 1999-Up	1	
127510A	Body W/Gears, U340E/U341E/U341F Pump (Takes 7 Bolts To Case/10 Bolts To Stator)1999-Up	1	
127510AA	Body W/Gears, U340E/U341E/U341F Pump (Takes 6 Bolts To Case/8 Bolts To Stator) 1999-Up	1	
127520A	Stator, U340E/U341E/U341F Pump (10 Bolts To Body) 1999-Up	1	
127520AA	Stator, U340E/U341E/U341F Pump (8 Bolts To Body) 1999-Up	1	
127530A	Gear Set, U340E/U341E/U341F Front Pump (With 9 Teeth Inner Gear) (.372" Thick) 1999-Up	1	
127547A	Apply Ring, U340E/U341E/U341F 2nd Brake Clutch (8 Legs) (5.705"ID) 1999-Up	1	
127554A	Drum W/Shaft, U340E/U341E/U341F Forward Clutch (4 Clutch) (26 Spline Shaft) 1999-Up	1	
127555A	Drum/Piston, U340E/U341E/U341F Direct Clutch (With Bonded Rubber) 3 Clutch (1.575" Tall) 1999-Up	1	
127556A	Drum W/Shaft, U340E/U341E/U341F Reverse Clutch (3 Clutch)(14 Spline Shaft)(From Snap Ring Groove To Top Of Drum Is .120") 1999-Up	1	
127556AA	Drum W/Shaft, U340E/U341E/U341F Reverse Clutch (2 Clutch)(14 Spline Shaft)(From Snap Ring Groove To Top Of Drum Is .260") 1999-Up	1	
127560A	Piston Kit, U340E/U341E/U341F Overdrive Clutch (Aluminum Piston) 1999-Up	1	
127562A	Piston Kit, U340E/U341E/U341F 2nd Brake Clutch (Steel Piston) 1999-Up	1	
127564A	Piston Kit, U340E/U341E/U341F Forward Clutch (Bonded) 1999-Up	1	
127565A	Piston Kit, U340E/U341E/U341F Direct Clutch (Aluminum Piston) (4.359"OD) 1999-Up	1	
127567A	Piston Kit, U340E/U341E/U341F Low/Reverse Clutch (Aluminum) 1999-Up	1	
127574A	Hub, U340E/U341E/U341F Forward Clutch (40 Teeth) 26 Splines (3.485" Tall) 1999-Up	1	
127575A	Hub, U340E/U341E/U341F Direct Clutch (40 Teeth Hub) 3.650" Long 1999-Up	1	
127582A	Planet, U340E/U341E/U341F Forward (4 Gear) (With 44 Teeth Low/Reverse Clutch Hub) 1999-Up	1	
127583A	Planet Kit, U340E/U341E/U341F (With 4 Gear Front & Rear Planet) 1999-Up (Contains: # 584 / 247 / 614 / 237 / 238 / 239 / 889 / 594 / 582 / 241 / 622)	1	
127584A	Planet, U340E/U341E/U341F Output (4 Gear) (Uses 46 Teeth Sun Gear) 1999-Up (With 75 Teeth Ring Gear)	1	
127594A	Ring Gear, U340E/U341E/U341F Output Planet (85 Teeth) (22 Lugs) 1999-Up	1	
127614A	Sun Gear, U340E/U341E/U341F Output Planet (46 Teeth) .868" Thick (2.305"OD) 1999-Up	1	
127622A	Shell W/Sun Gear, U340E/U341E/U341F (32 Teeth Sun Gear) (40 Teeth CLutch Hub) 1999-Up	1	

TOYOTA

© Whatever It Takes Transmission Parts. Inc.

127639A ..... Spring, U340E/U341E/U341F (Anti-Clunk) Sets Between The Case And # 665 1999-Up ..... 1 .....

PART #	SPRAGS & ONE WAY CLUTCHES	QTY	REFERENCE #

127652A ..... Sprag, U340E/U341E/U341F Rear (16 Elements) 1999-Up ..... 1 .....
127654A ..... Sprag, U340E/U341E/U341F Front (15 Roller, With Plastic Cage) 1999-Up ..... 1 .....
127662A ..... Outer Race, U340E/U341E/U341F Rear Sprag (.770" Thick) 1999-Up ..... 1 .....
127665A ..... Outer Race, U340E/U341E/U341F Front Sprag (15 Outer Lugs) (Fits A 15 Roller Sprag)
..... (.475" Thick) 1999-Up ..... 1 .....

PART #	HARD PARTS (Continued)	QTY	REFERENCE #

127698A ..... Oil Deflector, U340E/U341E Differential (Tin, 2 Bolt) (5 1/4" Center To Center Bolt Holes)
..... (2WD Only) 1999-Up ..... 1 .....
127698B ..... Oil Deflector, U341F Differential (Tin, 2 Bolt) (5 3/8" Center To Center Bolt Holes) (AWD Only)
..... 1999-Up ..... 1 .....
127710A ..... Gear, U340E/U341E/U341F Output Drive (Transfer) (52 Teeth) 1999-Up ..... 1 .....
127712A ..... Gear, U340E/U341E/U341F Driven Transfer (53 Teeth) (15 Parking Lugs) 1999-Up ..... 1 .....
127712B ..... Gear, U340E/U341E/U341F Driven Transfer (52 Teeth) (15 Parking Lugs) 1999-Up ..... 1 .....
127716A ..... Housing, U340E/U341E/U341F Differential (Less Ring Gear) 8 Bolt (25 Teeth Speed-O) 1.060"ID
..... Of Axle Hub (With 23 Splined Axle Gear) 24 Roller Bearing On Speed-O Side And 23 Roller
..... Bearing On Ring Gear Side 1999-Up ..... 1 .....
127716AA ..... Housing, U340E/U341E Differential (Less Ring Gear) 8 Bolt (25 Teeth Speed-O) 1999-Up
..... (1.102"ID Of Axle Hub) With 20 Splined Axle Gear (24 Roller Bearing On Speed-O Side And
..... 23 Roller Bearing On Ring Gear Side) ..... 1 .....
127716B ..... Housing, U341F (AWD) Differential (Less Ring Gear) 8 Bolt (27 Teeth Speed-O) 1999-Up
..... (1.102"ID Of Axle Hub) With 20 Splinwed Axle Gear) 27 Roller Bearing On Speed-O Side
..... & 23 Roller Bearing On Ring Gear Side) Has a Hub With 40 Splines That Extends Through
..... The Bell Housing) ..... 1 .....
127720A ..... Ring Gear, U340E/U341E Differential (77 Teeth, 2 Groove) 8 Bolt 1999-Up ..... 1 .....
127720B ..... Ring Gear, U341F (AWD) Differential (79 Teeth, 4 Groove) 8 Bolt 1999-Up ..... 1 .....
127730A ..... Pinion, U340E/U341E Shaft (20 Teeth, 2 Grooves) 1999-Up ..... 1 .....
127730B ..... Pinion, U341F (AWD) Shaft (19 Teeth, 3 Grooves) 1999-UP ..... 1 .....
127740A ..... Valve Body, U340E/U341E/U341F (5 Solenoids)(EPC Solenoid Is 1.108"OD) 1999-06 ..... 1 .....
127740B ..... Valve Body, U340E/U341E/U341F (5 Solenoids)(EPC Solenoid Is 0.840"OD) 2007-Up ..... 1 .....

PART #	VALVE BODY COMPONENTS	QTY	REFERENCE #

S127741CK .... Lock-Up Control Valve Kit, U341E/U341F (Oversized)(Sonnax)(Contains: Lock-Up Control
..... Valve, Plunger Valve, Plunger Sleeve, & Retainer)(Must Use T-F-37740-TL8 & T-VB-Fix) ..... 1 .....
T-F-37740-TL8 .. Tool Kit For S127741CK ..... 1 .....
S127741PK .... Valve Kit, U341E/U341F Secondary Pressure Regulator (Oversized)(Sonnax)(Must Use
..... T-F-37740-TL7 & T-VB-FIX)(Contains: Valve & End Plug) ..... 1 .....
T-F-37740-TL7 .. Tool Kit For S127741PK ..... 1 .....

PART #	HARD PARTS (Continued)	QTY	REFERENCE #

127750A ..... Bell Housing, U340E (Cast # U340E) (6 1/8" Top Bolts) 1999-Up (Starter At 3:00) ..... 1 .....
127750AB ..... Bell Housing, U341E (Cast # U341E) (5 3/8" Top Bolts) 1999-Up (Starter At 2:00) ..... 1 .....
127750B ..... Bell Housing, U341F (AWD) (Cast # U341F) (5 3/8" Top Bolts) 1999-Up (Starter At 2:00)
..... (With 4 Bolt Flange For AWD) ..... 1 .....
127759A ..... Rear Cover, U340E/U341E/U341F (11 Bolt) No Mount 1999-Up ..... 1 .....
127760A ..... Case, U340E (Cast # U340 Next To Dipstick) 19 Bolt Pan (14 Bolts To Bell) 1999-Up ..... 1 .....
127760AB ..... Case, U341E (Cast # U341 Next To Dipstick) 19 Bolt Pan (14 Bolts To Bell) 1999-Up ..... 1 .....
127760B ..... Case, U341F (AWD) (Cast # U341 Next To Dipstick) 19 Bolt Pan (14 Bolts To Bell) 1999-Up ..... 1 .....
127765A ..... Pan, U340E/U341E/U341F Bottom (19 Bolt, With Drain Plug) 1999-Up ..... 1 .....
127774A ..... Speed-O Housing, U340E/U341E/U341F (25 Teeth Gear) With 3 Prong Connectors 1999-Up ..... 1 .....
127776AK ..... Bolt Set, U340E/U341E/U341F Bell Housing To Case (14 Pieces) 1999-Up ..... 1 .....
127777AK ..... Bolt Set, U340E/U341E/U341F Pump To Case (7 Pieces) 1999-Up ..... 1 .....
127778AK ..... Bolt Set, U340E/U341E/U341F Stator To Pump Body (10 Pieces) 1999-Up ..... 1 .....
127779AK ..... Bolt Set, U340E/U341E/U341F Pan To Case (19 Pieces) 1999-Up ..... 1 .....
127780AK ..... Bolt Set, U340E/U341E/U341F Rear Cover To Case (11 Pieces) 1999-Up ..... 1 .....
127782AK ..... Bolt Set, U340E/U341E/U341F Valve Body To Case (17 Pieces) 1999-Up ..... 1 .....
127795A ..... Nut, U340E/U341E/U341F Output Drive Gear To Output Planet (9 Notches) 1999-Up ..... 1 .....
127846A ..... Bracket, U340E/U341E/U341F Holds Differential Lube Tube 1999-Up ..... 1 .....
127847A ..... Gear, U340E/U341E Speed-O Drive (25 Teeth) Yellow Plastic 1999-Up ..... 1 .....
127847B ..... Gear, U341F (AWD) Speed-O Drive (27 Teeth) 1999-Up ..... 1 .....
127861A ..... Snap Ring, U340E/U341E/U341F Holds Overdrive Clutches In 1999-Up (Also Fits
..... U340E/U341E/U341F Holds 2nd Brake Clutch Pressure Plate In #873) ..... 1 .....
127862A ..... Snap Ring, U340E/U341E/U341F Holds Overdrive Clutch Retainer In 1999-Up ..... 1 .....

© Whatever It Takes Transmission Parts. Inc.

PART #	HARD PARTS (Continued)	QTY	REFERENCE #
127872A	Snap Ring, U340E/U341E/U341F Holds 2nd Brake Clutch Housing In Case 1999-Up	1	
127873A	Use 127861A.	1	
127874A	Snap Ring, U340E/U341E/U341F Holds 2nd Brake Clutch Retainer In 1999-Up	1	
127876A	Snap Ring, U340E/U341E/U341F Holds Pressure Plate In Forward Clutch Drum 1999-Up	1	
127877A	Snap Ring, U340E/U341E/U341F Holds Forward Clutch Retainer On 1999-Up	1	
127878A	Snap Ring, U340E/U341E/U341F Holds Direct Clutch Pressure Plate In Drum 1999-Up	1	
127879A	Snap Ring, U340E/U341E/U341F Holds Direct Clutch Retainer In Drum 1999-Up	1	
127885A	Snap Ring, U340E/U341E/U341F Holds Low/Reverse Pressure Plate In Case 1999-Up	1	
127888A	Snap Ring, U340E/U341E/U341F Holds Rear Sprag In Outer Race 1999-Up	1	
127889A	Snap Ring, U340E/U341E/U341F Holds Output Planet Ring Gear To Forward Planet 1999-Up	1	
127892A	Snap Ring, U340E/U341E/U341F Holds Reverse Clutch Pressure Plate In Drum 1999-Up	1	
127893A	Snap Ring, U340E/U341E/U341F Holds Low/Reverse Clutch Retainer In (.068") 1999-Up	1	
127898A	Snap Ring, U340E/U341E/U341F Between The 2 Cup Races That Set In The Case (.081" Thick) 1999-Up	1	
127930A	Accumulator Assembly, U340E/U341E/U341F 2nd Brake (B-1) 1999-Up	1	
127935A	Accumulator Assembly, U340E/U341E/U341F Direct (C-2) 1999-Up	1	
127945A	Accumulator Assembly, U340E/U341E/U341F Reverse (C-3) 1999-Up	1	
127956A	Housing, U340E/U341E/U341F 2nd Brake Clutch (Alumunim) 9 Lugs (4.552"ID) 1999-Up	1	
127960A	Piston, U340E/U341E/U341F Overdrive Clutch (Aluminum) 1.059" Thick 1999-Up	1	
127962A	Piston, U340E/U341E/U341F 2nd Brake Clutch (Steel) 8 Legs (4.880"ID) 1999-Up	1	
127964A	Piston, U340E/U341E/U341F Forward Clutch (Bonded) 1999-Up	1	
127964AK	Piston Set, U340E/U341E/U341F (Bonded) 1999-Up (Contains: #964A, 984A & 555A)	1	
127965A	Piston, U340E/U341E/U341F Direct Clutch (Aluminum) 4.359"OD 1999-Up	1	
127967A	Piston, U340E/U341E/U341F Low/Reverse Clutch (Aluminum) (5.938"OD) 1999-Up	1	
127970A	Springs W/Retainer, U340E/U341E/U341F Overdrive Clutch Return (24 Springs) 1999-Up	1	
127972A	Springs W/Retainer, U340E/U341E/U341F 2nd Brake Clutch (28 Springs) 1999-Up	1	
127974A	Springs, U340E/U341E/U341F Forward Clutch Return (20 Springs) 1999-Up	1	
127975A	Springs W/Retainer, U340E/U341E/U341F Direct Clutch Return (16 Springs) 1999-Up	1	
127977A	Springs W/Retainer, U340E/U341E/U341F Low/Reverse Clutch (6 1/8"OD) 1999-Up	1	
127984A	Retainer/Piston, U340E/U341E/U341F Forward Clutch Spring (Bonded) 1999-Up	1	
127991A	Linkage Assembly, U340E/U341E/U341F Internal 1999-Up	1	
127995A	Park Pawl Assembly, U340E/U341E/U341F 1999-Up	1	
127996A	Fitting, U340E/U341E/U341F Cooler Line (Upper, Elbow) 1999-Up	1	
127996B	Fitting, U340E/U341E/U341F Cooler Line (Lower, Straight) 1999-Up	1	
127999A	Oil Tube, U340E/U341E/U341F Differential Lube (4 3/8" Long) 1999-Up	1	

© Whatever It Takes Transmission Parts. Inc.

© Whatever It Takes Transmission Parts. Inc.

002 Overhaul Kit

004 Master L/Steels Kit

006 Master W/Steels Kit

119 Friction Module

139 Steel Module

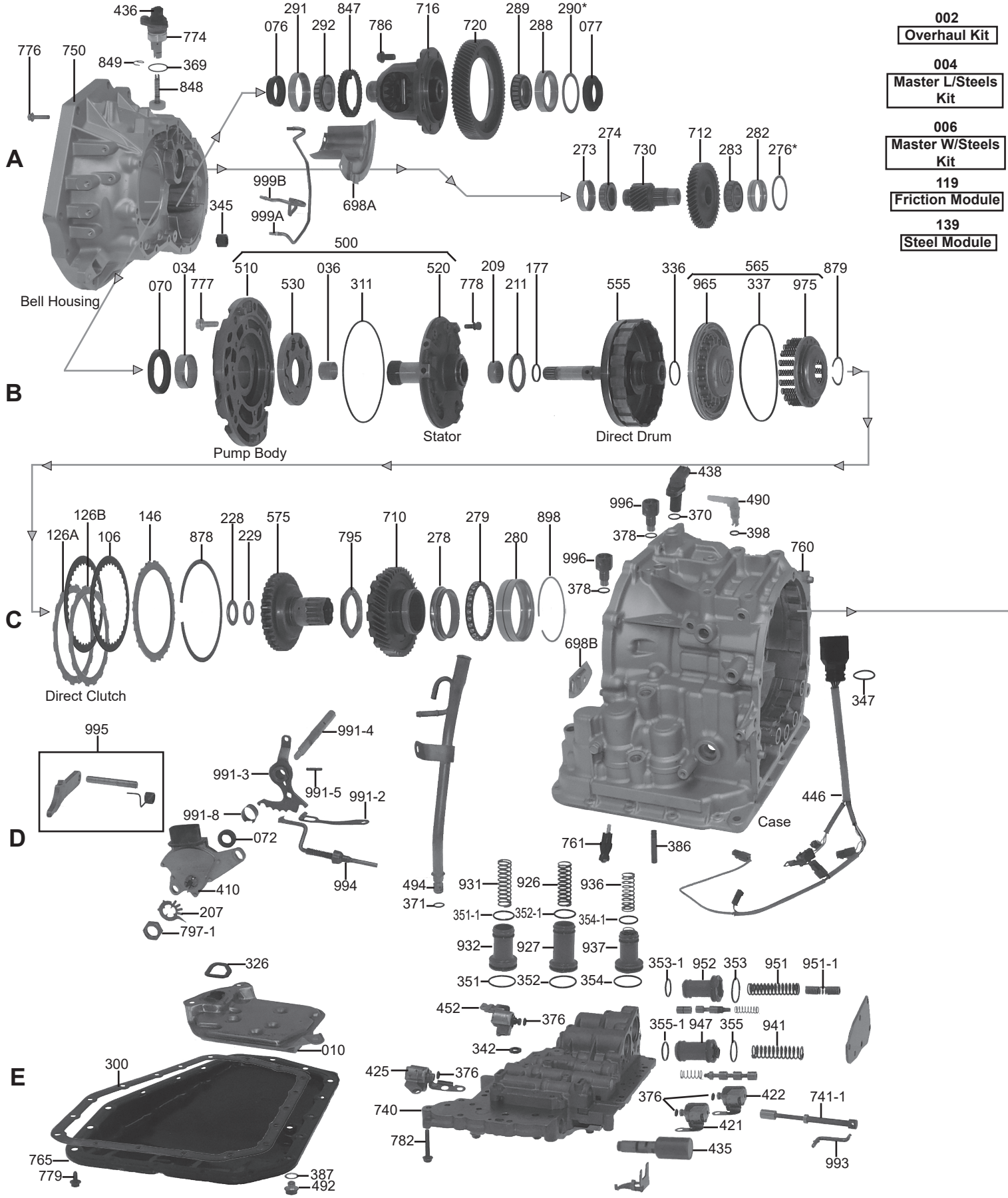

TOYOTA

AW80-40LE/AW81-40LE/U440E

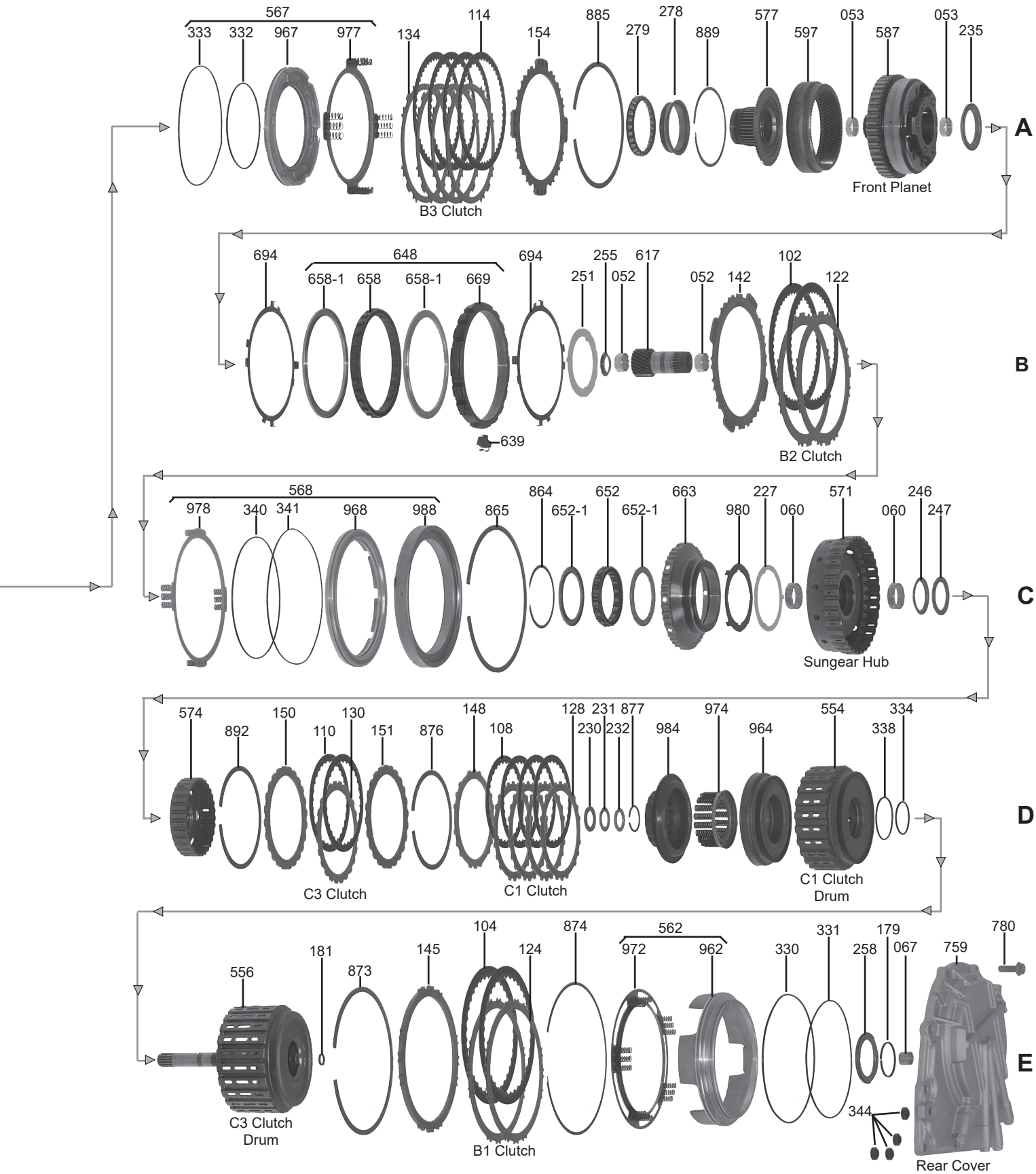

TOYOTA

1-800-940-0197

© Whatever It Takes Transmission Parts. Inc.

PART #	OVERHAUL KITS	QTY	REFERENCE #
137002A	Overhaul Kit, AW81-40LE 2004-Up (For Bonded Pistons Sell A137960AK)	1	

PART #	MASTER L/STEEL KITS	QTY	REFERENCE #
137004A	Master L/Steels Kit, AW81-40LE 2004-Up (For Bonded Pistons Sell A137960AK)	1	

PART #	MASTER W/STEEL KITS	QTY	REFERENCE #
137006A	Master w/Steels Kit, AW81-40LS 2004-Up (For Bonded Pistons Sell A137960AK)	1	

PART #	FILTER	QTY	REFERENCE #
137010A	Filter, AW80-40LE/AW81-40LE/U440E Valve Body (Metal)(3 Bolts)(Slotted Intake)(Wire Mesh) 1999-Up	1	
137011A	FK, AW81-40LE 2004-Up	1	

PART #	BUSHINGS	QTY	REFERENCE #
57034A	Bushing, AW80-40LE/AW81-40LE/U440E Pump Body (1.500”ID)(Brass W/Oil Pockets)	1	
137036A	Bushing, AW80-40LE/AW81-40LE/U440E Stator (Front)(.725”ID)(.840”OD)(.690”Long)(Brass) 1999-Up	1	
137052A	Bushing, AW80-40LE/AW81-40LE/U440E Sungear (.710”ID)(.825”OD)(.400”Wide)(Oil Pockets) 1999-Up	2	
137053A	Bushing, AW80-40LE/AW81-40LE/U440E Front Planet (Brass)(.708”ID)(.827”OD)(.390”Wide) 1999-Up	2	
137060A	Bushing, AW80-40LE/AW81-40LE/U440E Rear Sun Gear Hub (1.045”ID)(1.160”OD) 1999-Up	2	
137067A	Bushing, AW80-40LE/AW81-40LE/U440E In Rear Cover To C1 Drum (.550”ID)(.670”OD) (.455”Wide) 1999-Up	1	

PART #	MEDAL CLAD SEALS	QTY	REFERENCE #
57070A	Seal, AW80-40LE/AW81-40LE/U440E Pump	1	
60072	Seal, AW80-40LE/AW81-40LE/U440E Manual Shaft (.275”Thk)(.875”OD)(In Bell) 1999-Up	1	
137076A	Seal, AW80-40LE/AW81-40LE/U440E Axle (Passenger Side) (2.137”OD)(1.445”ID) 1999-Up	1	
137077A	Seal, AW80-40LE/AW81-40LE/U440E Diff To Case (2.483”OD) (1.435”ID)(.352”/.612”Tall) 1999-Up	1	

PART #	FRICTION	QTY	REFERENCE #
137102A	Fri, AW80-40LE/AW81-40LE/U440E B2 Clutch (.073”Thick)(50 Teeth)(6.060”OD) 1999-Up	2	
137104A	Fri, AW80-40LE/AW81-40LE/U440E C1 Clutch (.074”Thick)(36 Teeth)(6.610”OD) 1999-Up	2	
137106A	Fri, AW80-40LE/AW81-40LE/U440E Direct (4.683”OD)(36 Teeth)(.069”Thick) 1999-Up	2	
137108A	Fri, AW80-40LE/AW81-40LE/U440E C1 Clutch (30 Teeth)(.074”Thick)(4.415”OD) 1999-Up	4	
137110A	Fri, AW80-40LE/AW81-40LE/U440E C3 Clutch (30 Teeth)(.078”Thick)(4.620”OD) (Straight Grooves) 1999-Up	2	
137114A	Fri, AW80-40LE/AW81-40LE/U440E B3 Clutch (.072”Thick)(5.650”OD)(48 Teeth) 1999-Up	4	
137119A	Fri Module, AW81-40LE 2004-Up	1	

PART #	STEELS	QTY	REFERENCE #
137122A	Steel, AW80-40LE/AW81-40LE/U440E B2 Clutch (.079”Thick)(12 Teeth)(8 Are Dipped) (5.148”ID) 1999-Up	2	
137124A	Steel, AW80-40LE/AW81-40LE/U440E B1 Clutch (.085”Thick)(12 Teeth)(5.875”ID) 1999-Up	2	
137126A	Steel, AW80-40LE/AW81-40LE/U440E Direct (16 Teeth)(.071”Thick)(4.002”ID)(Bottom) 1999-Up	1	
137126B	Steel, AW80-40LE/AW81-40LE/U440E Direct (Center)(16 Teeth)(.091”Thick)(4.002”ID) 1999-Up	1	
137128A	Steel, AW80-40LE/AW81-40LE/U440E C1 Clutch (18 Teeth) (3.785”ID)(.069”Thick) 1999-Up	4	
137130A	Steels, AW80-40LE/AW81-40LE/U440E C3 Clutch (24 Teeth)(.070”Thick)(3.950”ID) 1999-Up	1	
137134A	Steel, AW80-40LE/AW81-40LE/U440E B3 Clutch (.072”Thick)(5.040”ID)(6.095”OD)(12 Teeth) (8 Teeth Are Dipped Out) 1999-Up	4	
137139A	Steel Module, AW81-40LE 2004-Up	1	

PART #	PRESSURE PLATES	QTY	REFERENCE #
137142A	P.Plate, AW80-40LE/AW81-40LE/U440E B2 Clutch (Rear)(12 Dipped Teeth)(4 Wide Teeth) (12 Spring Bases)(5.140”ID) 1999-Up	1	

© Whatever It Takes Transmission Parts. Inc.

137145A .....P.Plate, AW80-40LE/AW81-40LE/U440E B1 Clutch (.195"Thick)(12 Dipped Teeth)(5.880"OD) 1999-Up 1
137146A .....Pressure Plate, AW80-40LE/AW81-40LE/U440E Direct (Top)(.128"Thick)(12 Dipped Teeth) .....(3.998"ID) 1999-Up 1
137148A .....Pressure Plate, AW80-40LE/AW81-40LE/U440E C1 Clutch (18 Teeth) (3.780"ID) 1999-Up 1
137150A .....Pressure Plate, AW80-40LE/AW81-40LE/U440E C3 Clutch (.130"Thick)(24 Teeth)(#3) 1999-Up .....(Selective) 1
137151A .....Pressure Plate, AW80-40LE/AW81-40LE/U440E C3 Clutch Apply (24 Teeth)(3.950"ID) .....(.115"Thick)(#1) 1999-Up (Selective) 1
137154A .....Pressure Plate, AW80-40LE/AW81-40LE/U440E B3 Clutch (Top)(.135"Thick)(5.045"ID) 1999-Up 1

PART #	SEALING RINGS	QTY	REFERENCE #

137177A .....Ring, AW80-40LE/AW81-40LE/U440E Input Shaft To Stator (.880"OD)(.090"Thick)(Scarf Cut) 1999-Up 2
137179A .....Ring, AW80-40LE/AW81-40LE/U440E Rear Cover (.090"Thk)(1.650"OD) 1999-Up.....2
137181A .....Ring, AW80-40LE/AW81-40LE/U440E C3 Drum (.520"OD)(.090"Thk)(Scarf Cut) 1999-Up 1

PART #	WASHERS & BEARINGS	QTY	REFERENCE #

137207A .....Washer, AW80-40LE/AW81-40LE/U440E Locking (Locks Nut On Switch) 1999-Up.....1
137209A .....Needle Bearing, AW80-40LE/AW81-40LE/U440E (Stator)(Rear) (1.080"OD)(NSK DB502308WA) 1999-Up 1
137211A.....Bearing w/Race, AW80-40LE/AW81-40LE/U440E Pump To Direct Drum (1.900"OD)(1.300"ID) .....(.140"Thick) 1999-Up 1
137227A .....Washer, AW80-40LE/AW81-40LE/U440E F1 Sprag Retainer To Sungear Hub (Plastic)(3 Tabs) .....(3.120"OD)(2.660"ID) 1999-Up 1
137228A .....Race, AW80-40LE/AW81-40LE/U440E Direct Drum To Front Planet (.099"Thick)(1.278"OD) .....(.814"ID) 1999-Up 1
137229A .....Bearing w/Race, AW80-40LE/AW81-40LE/U440E Direct Drum To Front Planet (Rear)(.110"Thick) .....(.708"ID)(1.180"OD) 1999-Up 1
137230A .....Race, AW80-40LE/AW81-40LE/U440E Drum To Hub (Front)(.079"Thick)(1.200"OD)(.770"ID) 1999-Up 1
137231A .....Needle Bearing, AW80-40LE/AW81-40LE/U440E C1 Drum To Hub (.079"Thick)(1.155"OD) .....(.715"ID) 1999-Up 1
137232A .....Race, AW80-40LE/AW81-40LE/U440E C1 Drum To Hub (Rear)(1.100"OD)(.720"ID)(.079"Thick) 1999-Up 1
137235A .....Bearing w/Races, AW80-40LE/AW81-40LE/U440E Planet To Rear Sungear Hub (2.250"OD) .....(1.655"ID)(.140"/.260"Thick) 1999-Up.....1
137246A .....Race, AW80-40LE/AW81-40LE/U440E Hub To C1 Hub (Front)(1.780"OD)(1.380"ID) .....(.027"/.145"Thick) 1999-Up 1
137247A .....Bearing, AW80-40LE/AW81-40LE/U440E C3 Clutch Hub (w/Race) (1.820"OD)(1.317"ID) .....(.110"Thk)(32 Needles) 1999-Up.....1
137251A .....Washer, AW80-40LE/AW81-40LE/U440E Planet To Sungear Hub (Plastic)(3.258"OD)(.107"Thick) .....(2.480"ID)(3 Tabs) 1999-Up 1
137255A .....Race, AW80-40LE/AW81-40LE/U440E Planet To Front Sungear (1.140"OD)(.760""ID) .....(.030"/.150"Thick) 1999-Up 1
137258A .....Brg w/Race, AW80-40LE/AW81-40LE/U440E C3 Drum To Rear Cover (2.430"OD)(1.705"ID) .....(.140"Thick) 1999-Up 1
137273A .....Race, AW80-40LEW81-40LE/U440E Pinion In Bell (Tapered)(2.165"OD)(1.825"ID)(.510"Thick) 1999-Up 1
137274A .....Bearing, AW80-40LE/AW81-40LE/U440E Pinion To Bell (Tapered)(1.180"ID)(18 Rollers) 1999-Up 1
137276A .....Shim, AW80-40LE/AW81-40LE/U440E Pinion To Case (.078"Thick)(2.405"OD)(2.040"ID) .....1999-Up (Selective) 1
137278A .....Race, AW80-40LE/AW81-40LE/U440E Inner Drive Gear To Case (2.642"OD)(.490"Thick) .....(2.204"ID) 1999-Up 2
137279A .....Ball Bearing, AW80-40LE/AW81-40LE/U440E Drive Gear To Case (Cone)(27 Ball)(Plastic Cage) .....(.340"Thick)(Front & Rear Of The Case) 1999-Up.....2
137280A .....Race, AW80-40LE/AW81-40LE/U440E Double Sided In Case (3.265"OD)(2.733"ID)(.945"Thick) .....1999-Up (Sold With Case) 1
137282A .....Race, AW80-40LE/AW81-40LE/U440E Pinion To Case (.488"Thick)(2.440"OD)(2.050"ID) 1999-Up 1
137283A .....Bearing, AW80-40LE/AW81-40LE/U440E (Tapered)(17 Rollers)(1.160"ID)(KOYO ST3062-1) 1999-Up 1
137288A .....Race, AW80-40LE/AW81-40LE/U440E Differental To Case (Tapered)(2.835"OD)(.588"Thick) .....(NFTR38Z-20G) 1999-Up 1
137289A .....Bearing, AW80-40LE/AW81-40LE/U440E (Tapered)(22 Rollers)(1.513"ID)(NSK NFTR38Z-19G) 1999-Up 1

© Whatever It Takes Transmission Parts. Inc.

PART #	WASHERS & BEARINGS (Continued)	QTY	REFERENCE #
137290A	Shim, AW80-40LE/AW81-40LE/U440E Differental To Case (2.800"OD)(2.245"ID)(.092"Thick) 1999-Up (Selective)	1	
137291A	Race, AW80-40LE/AW81-40LE/U440E Differental To Bell (2.675"OD)(2.230"ID) 1999-Up	1	
137292A	Bearing, AW80-40LE/AW81-40LE/U440E Differental To Bell Housing (2.675"OD)(2.230"ID) 1999-Up	1	

PART #	GASKETS & RUBBER COMPONENTS	QTY	REFERENCE #
137300A	Gasket, AW80-40LE/AW81-40LE/U440E Pan (18 Holes) 1999-Up	1	
137311A	O-Ring, AW80-40LE/AW81-40LE/U440E Pump Body (5.070"OD)(.105"Thick) 1999-Up	1	
137326A	Gasket, AW80-40LE/AW81-40LE/U440E Filter For VB (Cork)(Square To Tapered) 1999-Up	1	
137330A	O-Ring, AW80-40LE/AW81-40LE/U440E B1 Clutch Piston (Outer)(Front)(6.305"OD)(.105"Thick) 1999-Up	1	
137331A	O-Ring, AW80-40LE/AW81-40LE/U440E B1 Clutch Piston (Outer)(Rear)(5.595"OD)(.105"Thick) 1999-Up	1	
137332A	O-Ring, AW80-40LE/AW81-40LE/U440E B3 Clutch Piston (Inner)(3.810"ID)(.103"Thick) 1999-Up	1	
137333A	O-Ring, AW80-40LE/AW81-40LE/U440E B3 Clutch Piston (Outer)(5.670"OD)(.103"Thick) 1999-Up"	1	
137334A	O-Ring, AW80-40LE/AW81-40LE/U440E C3 Clutch (Inner) (1.610"OD)(.105"Thick) 1999-Up	1	
137336A	O-Ring, AW80-40LE/AW81-40LE/U440E Inner For Piston (1.210"OD)(.103"Thick) 1999-Up	1	
137337A	O-Ring, AW80-40LE/AW81-40LE/U440E Outer For Piston (4.725"OD)(.110"Thick) 1999-Up	1	
137338A	O-Ring, AW80-40LE/AW81-40LE/U440E C1 Clutch (Inner) (.105"Thick)(1.795"ID) 1999-Up	1	
137340A	O-Ring, AW80-40LE/AW81-40LE/U440E B2 Clu Piston (Inner) (5.520"ID)(.105"Thick) 1999-Up	1	
137341A	O-Ring, AW80-40LE/AW81-40LE/U440E B2 Clu Piston (Outer) (6.595"OD)(.105"Thick) 1999-Up	1	
137342A	Seal, AW80-40LE/AW81-40LE/U440E Valve Body To Case (Lathe Cut)(.590"OD)(.130"Thk) (.350"ID) 1999-Up	1	
137344A	Seal, AW80-40LE/AW81-40LE/U440E Rear Cover To Case (Lathe Cut)(.590"OD)(.370"OD) (.260"Thick) 1999-Up	4	
137345A	Transfer Seal, AW80-40LE/AW80-40LE/U440E Bell To Case (3.80"Thick)(.315"ID)(.535"OD) 1999-Up	1	
137347A	O-Ring, AW80-40LE/AW81-40LE/U440E Wire Harness To Case (1.065"OD)(.090"Thk) 1999-Up	1	
137351A	O-Ring, AW80-40LE/AW81-40LE/U440E C2 Acculator Piston (Outer)(1.380"OD)(.100"Thick) 1999-Up	1	
137351A-1	O-Ring, AW80-40LE/AW81-40LE/U440E C2 Accumulator Piston (Inner)(1.080"OD)(.100"Thick) 1999-Up	1	
137352A	O-Ring, AW80-40LE/AW81-40LE/U440E C1 Accumulator Piston (Outer)(1.380"OD)(.100"Thick) 1999-Up	1	
137352A-1	O-Ring, AW80-40LE/AW81-40LE/U440E C1 Accumulator Piston (Inner)(1.090"OD)(.100"Thick) 1999-Up	1	
137353A	O-Ring, AW80-40LE/AW81-40LE/U440E 2nd Brake Acculator Piston (Outer)(1.380"OD) (.100"Thick) 1999-Up"	1	
137353A-1	O-Ring, AW80-40LE/AW81-40LE/U440E 2nd Brake Accumlator (Inner)(.985"OD)(.100"Thick) 1999-Up	1	
137354A	O-Ring, AW80-40LE/AW81-40LE/U440E B1 Accululator Piston (Outer)(1.375"OD)(.100"Thick) 1999-Up	1	
137354A-1	O-Ring, AW80-40LE/AW81-40LE/U440E B1 Accumulator Piston (Inner)(.990"OD)(.100"Thick) 1999-Up	1	
137355A	O-Ring, AW80-40LE/AW81-40LE/U440E Accumulator Reverse Piston (Outer)(1.180"OD) (.100"Thick) 1999-Up	1	
137355A-1	O-Ring, AW80-40LE/AW81-40LE/U440E Accumulator Reverse Piston (Inner)(1.060"OD) (.100"Thick) 1999-Up	1	
137369A	O-Ring, AW80-40LE/AW81-40LE/U440E Speedo Housing To Bell (.097"Thick)(1.360"OD) 1999-Up	1	
137370A	O-Ring, AW80-40LE/AW81-40LE/U440E Input Sensor (.615"OD)(.080"Thick) 1999-Up	1	
137371A	O-Ring, AW80-40LE/AW81-40LE/U440E (.540"OD)(.075"Thick) 1999-Up	1	
137376A	O-Ring, AW80-40LE/AW81-40LE/ 440E Solenoids (.385"OD)(.180"Thick)(Fits Solenoids #425, #452, #421 & #422) 1999-Up	1	
137378A	O-Ring, AW80-40LE/AW81-40LE/U440E Cooler Line Fitting To Case (.075"Thick) 1999-Up	2	
137386A	Seal, AW80-40LE/AW81-40LE/U440E 2nd Brake Apply (Tube)(1.640"Long)(.220"ID)(Metal w/ Rubber Tips) 1999-Up	1	
137387A	Gasket, AW80-40LE/AW81-40LE/U440E Plug To Pan (Aluminum)(.680"OD)(.038"Thick) 1999-Up	1	
137398A	O-Ring, AW80-40LE/AW81-40LE/U440E Vent (.470"OD)(.080"Thick) 1999-Up	1	

TOYOTA

© Whatever It Takes Transmission Parts. Inc.

PART #	ELECTRICAL COMPONENTS	QTY	REFERENCE #
137410A	Switch, AW80-40LE/AW81-40LE/U440E PRNDL (Retangle Conn w/ 2 Wide & 7 Narrow Blades) (2 Bolt 1/2 Aluminum 1/2 Plastic) 1999-Up	1	
137421A	Solenoid, AW80-40LE/AW81-40LE/U440E Shift #1 (2 Bolt Bracket)(1 Prong Green Connector) (w/O-Ring On Snout) 1999-Up (Also Fits AW80-40LE/AW81-40LE/U440E Shift #2)	1	
137425A	Solenoid, AW80-40LE/AW81-40LE/U440E TCC (3 Bolt Bracket)(1 Prong Green Connector) (w/O-Ring On Snout) 1999-Up	1	
137435A	Solenoid, AW80-40LE/AW81-40LE/U440E EPC (2 Prong Black Connector)(3.705”Long) (No O-Rings) 1999-Up	1	
137436A	Sensor, AW80-40LE/AW81-40LE/U440E Speed (3 Blade Connector) 1999-Up (Sell With Speedo Housing)	1	
137438A	Sensor, AW80-40LE/AW81-40LE/U440E Input (2 Blade Oval Connector)(1 Bolt To Case)(On Top Of Case) 1999-Up	1	
137446A	Wire Harness, AW80-40LE/AW81-40LE/U440E (Internal)(8 Blade,8 Wire,1 Bolt Connector,4 One Wire & 1 Two Wire Conn.) 1999-Up	1	
137452A	Solenoid, AW80-40LE/AW81-40LE/U440E Timing (1 Bolt Bracket)(1 Prong Green Connector) (w/O-Ring On Snout) 1999-Up	1	

PART #	MISCELLANOUS COMPONENTS	QTY	REFERENCE #
137490A	Vent, AW80-40LE/AW81-40LE/U440E (Plastic Elbow)(1.405”Tall) 1999-Up	1	
137492A	Drain Plug, AW80-40LE/AW81-40LE/U440E Pan (14mm Hex x .600”Long) 1999-Up	1	
137494A	Tube, AW80-40LE/AW81-40LE/U440E Filler (11 1/2”Long)(1 Bolt Bracket)(Vent Line Welded On) (.510”OD At O-Ring) 1999-Up	1	

PART #	HARD PARTS	QTY	REFERENCE #
137500A	Pump, AW80-40LE/AW81-40LE/U440E (Pump Gears)(Cast Iron) 1999-Up	1	
137510A	Pump Body, AW80-40LE/AW81-40LE/U440E (Cast Iron)(8 Bolts To Stator)(6 Bolts To Case) 1999-Up	1	
137520A	Stator, AW80-40LE/AW81-40LE/U440E (3.745”Tall)(38 Splines)(8 Bolts To Body)(5.355”OD) 1999-Up	1	
137530A	Pump Gear Set, AW80-40LE/AW81-40LE/U440E (.333”Thick)(9 Lobe Inner w/2 Lugs)(10 Outer Lobe Outer) 1999-Up	1	
137554A	Drum, AW80-40LE/AW81-40LE/U440E C1 Clutch Piston (Bonded)(4 Clutch)(2.125”Tall) (4.905”OD)(1.815””ID)(36 Slots) 1999-Up	1	
137555A	Drum, AW80-40LE/AW81-40LE/U440E Direct (16 Front Splines)(17 Rear Splines)(6.280”Long) (2 Clutch) 1999-Up	1	
137556A	Drum, AW80-40LE/AW81-40LE/U440E C3 Clutch (w/Shaft)(24T Steels)(7 5/16”Tall)(72 Slots) 1999-Up	1	
137562A	Piston Kit, AW80-40LE/AW81-40LE/U440E B1 Clutch (Aluminum) 1999-Up	1	
137565A	Piston Kit, AW80-40LE/AW81-40LE/U440E Direct Clutch (Aluminum) 1999-Up	1	
137567A	Piston Kit, AW80-40LE/AW81-40LE/U440E B3 Clutch (Aluminum) 1999-Up	1	
137568A	Piston Kit, AW80-40LE/AW81-40LE/U440E B2 Clutch 1999-Up	1	
137571A	Hub, AW80-40LE/AW81-40LE/U440E Sungear (36 Outer Clutch Teeth)(30 Teeth Gear Left Angle) (2.415”Tall) 1999-Up	1	
137574A	Sun Gear Hub, AW80-40LE/AW81-40LE/U440E (30 Clutch Teeth)(1.290”Tall/.840”At Edge) 1999-Up	1	
137575A	Clutch Hub, AW80-40LE/AW81-40LE/U440E Direct (2.710”Tall)(36 Teeth)(15 Splines ID) (3.875”OD) 1999-Up	1	
137577A	Hub, AW80-40LE/AW81-40LE/U440E Front Ring Gear (69 Teeth)(1.745”Tall)(36 Splines) 1999-Up	1	
137587A	Planet, AW80-40LE/AW81-40LE/U440E (Front)(3 Long 20 Teeth Gears Right Angle)(3 Short Gears 20 Teeth Left Angle)(3.050”Tall)(48 Clutch Splines) 1999-Up	1	
137597A	Ring Gear, AW80-40LE/AW81-40LE/U440E (Front)(1.147”Thick)(69 Teeth)(Left Angle)1999-Up	1	
137617A	Sun Gear, AW80-40LE/AW81-40LE/U440E (Front)(24 Teeth)(1 Groove)(Right Angle)(2.685”Long) (24 Splines)(1.360”OD Gear) 1999-Up	1	
137639A	Spring, AW80-40LE/AW81-40LE/U440E Anti-Clunk (.022”Thick)(.780”Tall)(.905”Wide) 1999-Up	1	
137648A	Sprag Assembly, AW80-40LE/AW81-40LE/U440E F2 Low Gear (Sprag (658) & Outer Race (669)) 1999-Up	1	
137652A	Sprag, AW80-40LE/AW81-40LE/U440E F1 Element (16 Lugs)(.437”Thick)(2nd Gear) 1999-Up	1	
137652A-1	End Cap, AW80-40LE/AW81-40LE/U440E F1 Sprag (2.830”OD)(2.175”ID) 1999-Up	2	
137658A	Sprag, AW80-40LE/AW81-40LE/U440E F2 Low Gear (Brass Caps)(.455”Wide/.605”Wide w/ Caps) 1999-Up	1	
137663A	Outer Race, AW80-40LE/AW81-40LE/U440E F1 Sprag (40 Teeth)(2.830”ID)(1.297”Tall) 1999-Up	1	
137669A	Outer Race, AW80-40LE/AW81-40LE/U440E F2 Low Sprag (15 Lugs)(.545”Thick)(5.195”ID) 1999-Up	1	
137694A	Retainer, AW80-40LE/AW81-40LE/U440E Low Sprag (4 Tabs)(.024”Thick)(4.890”ID) 1999-Up	1	

© Whatever It Takes Transmission Parts. Inc.

PART #	HARD PARTS (Continued)	QTY	REFERENCE #
137698A	Oil Deflector, AW80-40LE/AW81-40LE/U440E Bell To Differental (3 Bolt Tin)(3.170"Tall) 1999-Up	1	
137698B	Oil Dam, AW80-40LE/AW81-40LE/U440E (Stamped Steel)(1 Bolt To Case)(Oil Slot Holds Fluid At The Ring & Pinion) 1999-Up	1	
137710A	Gear, AW80-40LE/AW81-40LE/U440E Drive Transfer Gear (44 Teeth)(Right Angle)(1.805"Tall) (4.410"OD)(14 Pork Lugs) 1999-Up	1	
137712A	Gear, AW80-40LE/AW81-40LE/U440E Driven Transfer (45 Teeth)(Left Angle One Groove) (4.505"OD) 1999-Up"	1	
137715A	Differental Assembly, AW80-40LE/AW81-40LE/U440E (75 Teeth)(8 Bolt Ring Gear)(One groove) 1999-Up	1	
137716A	Differental Housing, AW80-40LE/AW81-40LE/U440E (8 Bolt)(2 Windows)(5.080"Tall) 1999-Up	1	
137720A	Ring Gear, AW80-40LE/AW81-40LE/U440E Differental (75 Teeth)(One Groove In Center) (Right Angle)(8 Bolt)(1.195"Thick) 1999-Up	1	
137730A	Pinion Shaft, AW80-40LE/AW81-40LE/U440E (20 Teeth)(One Center Groove)(Left Angle) (3.840"Long)(30 Splines)(1.160"OD End) 1999-Up	1	
137740A	Valve Body, AW80-40LE/AW81-40LE/U440E (5 Solenoids)(Cast # 9140) 1999-Up	1	
S97741CAK	Valve & Sleeve Kit, AW80-40LE/AW81-40LE/U440E Lockup Relay Control (Sonnax)	1	
137741-1A	Manual Valve, AW80-40LE/AW81-40LE/U440E In Valve Body (4.915"Long)(2-.470"OD Lands) (One Land Has Hole For Z Clip) 1999-Up	1	
137750A	Bell Housing, AW80-40LE/AW81-40LE/U440E (4 7/8"Top Bolts)(2.137"OD Axle Seal)(16 Bolts To Case) 1999-Up	1	
137759A	Rear Cover, AW80-40LE/AW81-40LE/U440E (9 Bolts)(2 Dowel Holes)(5AK Casting #)(1.630"OD Ring Tower)(4 Pressure Taps) 1999-Up	1	
137760A	Case, AW80-40LE/AW81-40LE/U440E (18 Pan Bolts)(16 Bolts To Bell)(9 Bolt Rear Cover) (4 Threaded Mount Bosses On Top) 1999-Up	1	
97761C	Ball Plunger W/Spring, AW80-40LE/AW81-40LE/U440E (In Case Under Valve Body)(Plastic Housing) 1999-Up	1	
137765A	Pans, AW80-40LE/AW81-40LE/U440E Bottom (18 Bolts)(w/Drain Plugs)(4 Ridges)(Two Magnet Spots) 1999-Up	1	
137774A	Housing, AW80-40LE/AW81-40LE/U440E (w/Speed Sensor)(3 Blade)(Aluminum/Plastic) (3.575"Long) 1999-Up	1	
137776AK	Bolt Set, AW80-40LE/AW81-40LE/U440E Bell Housing To Case (16 Pieces) (12mm Hex x 1.450"Long) 1999-Up	1	
137777A	Bolt Set, AW80-40LE/AW81-40LE/U440E Pump To Case (12mm Hex x 1.045"Long) 1999-Up	1	
137778AK	Bolt Set, AW80-40LE/AW81-40LE/U440E Stator To Body (10mm Hex x .825"Long)(8 Pieces) 1999-Up	1	
137779AK	Bolt Set, AW80-40LE/AW81-40LE/U440E Pan (18 Pieces) (10mm Hex x .730"Long) 1999-Up	1	
137780AK	Bolt Set, AW80-40LE/AW81-40LE/U440E Rear Cover (9 Pieces)(12mm Hex x 1.260"Thick) 1999-up	1	
137782AK	Bolt Set, AW80-40LE/AW81-40LE/U440E Valve Body To Case (6 x 1.010")(5 x 1.315")(1 x 1.630") (1 x 1.775")(1 x 2.140")(14Pieces)(10mm Hex) 1999-Up	1	
137786AK	Bolt Set, AW80-40LE/AW81-40LE/U440E Ring Gear To Differental (8 Pieces) (14mm Hex x 1.205"Long)(Right Handed Threads) 1999-Up	1	
137795A	Nut, AW80-40LE/AW81-40LE/U440E Bearing Preload (6 Point)(Right Handed 55mm)(1.675"ID) (Threads On To Front Ring Gear) 1999-Up	1	
137797-1A	Nut, AW80-40LE/AW81-40LE/U440E PRNDL (22mm)(6 point)(.290"Thick) 1999-Up	1	
137847A	Gear, AW80-40LE/AW81-40LE/U440E Speed-O On Differental (Plastic)(35 Teeth)(2 Rounded ID Lugs) 1999-Up	1	
137848A	Speedo Gear, AW80-40LE/AW81-40LE/U440E (W/ Steel Shaft)(30 Teeth)(2.465"Long)1999-Up	1	
137849A	Clip, AW80-40LE/AW81-40LE/U440E Spd-O-Gear To Housing (.047"Thick)(.725"OD) 1999-Up	1	
137864A	Snap Ring, AW80-40LE/AW81-40LE/U440E Holds F1 Sprag End Cap (3.007"OD)(.035"Thick) (.155"Wide) 1999-Up	1	
137865A	Snap Ring, AW80-40LE/AW81-40LE/U440E Holds B2 Retainer To Case (.075"Thick)(6.995"OD) (.250"Wide) 1999-Up	1	
137873A	Snap Ring, AW80-40LE/AW81-40LE/U440E Holds B1 Clutch To Case (.075"Thick)(6.995"OD) (.250"Wide) 1999-Up	1	
137874A	Snap Ring, AW80-40LE/AW81-40/U440E B1 Clutch Holds Piston Kit To Rear Cover (.035"Thick) (.160"Wide) 1999-Up	1	
137876A	Snap Ring, AW80-40LE/AW81-40LE/U440E Holds C1 Clutch To C1 Clutch Drum (4.700"OD) (.060"Thick)(.250"Wide) 1999-Up	1	
137877A	Snap Ring, AW80-40LE/AW81-40LE/U440E C1-C3 Piston Kit (1.245"OD)(.055"Thick)(.100"Wide) 1999-Up	1	
137878A	Snap Ring, AW80-40LE/AW81-40LE/U440E Holds Dirct Clutch To Drum (Top)(.061"Thick) (5.010"OD) 1999-Up	1	
137879A	Snap Ring, AW80-40LE/AW81-40LE/U440E Holds Retainer To Drum (.040"Thick)(1.280"OD) (.119"Wide) 1999-Up	1	

TOYOTA

© Whatever It Takes Transmission Parts. Inc.

137885A ..... Snap Ring, AW80-40LE/AW81-40LE/U440E Holds B3 Clutch To B3 Piston)(Top)(.063"Thick)
..... (6"OD)(.250"Wide) 1999-Up 1
137889A ..... Snap Ring, AW80-40LE/AW81-40LE/U440E Holds Ring Gear To Hub (.048"Thick)(3.810"OD)
..... (.160"Wide) 1999-Up 1
137892A ..... Snap Ring, AW80-40LE/AW81-40LE/U440E C3 Clutch (Top)(4.885"OD)(.060"Thick)(.250"Wide)
..... 1999-Up 1
137898A ..... Snap Ring, AW80-40LE/AW81-40LE/U440E Double Race To Case (Must Be Cut Out Of Case)
..... 1999-Up (Sold With Case) 1
137926A ..... Spring, AW80-40LE/AW81-40LE/U440E C1 Accumulator Piston (2.125"Long)(.675"OD) 1999-Up 1
137927A ..... Piston, AW80-40LE/AW81-40LE/U440E C1 Acculator (2.280"Long)(1.370"/1.075"OD)(Light
..... Blue Spring) 1999-Up 1
137931A ..... Spring, AW80-40LE/AW81-40LE/U440E C2 Accumulator Piston (2.215"Long)(.690"OD)
..... (.085"Wire OD)(Green) 1999-Up 1
137932A ..... Piston, AW80-40LE/AW81-40LE/U440E C2 Accumulator (2.065"Long)(1.70"/1.075"OD)(Light
..... Green Spring) 1999-Up 1
137936A ..... Spring, AW80-40LE/AW81-40LE/U440E B1 Accumulator Piston (1.835"Long)(.630"OD)(Pink)
..... 1999-Up 1
137937A ..... Piston, AW80-40LE/AW81-40LE/U440E B1 Accumulator Piston (1.895"Long)(1.370"/.975"OD)
..... 1999-Up 1
137941A ..... Spring, AW80-40LE/AW81-40LE/U440E Accumulator Reverse (.670"OD) (2.590"Long)
..... (.085"Wire OD) 1999-Up 1
137947A ..... Piston, AW80-40LE/AW81-40LE/U440E Accumulator Reverse (1.965"Long)(.980"/1.370"OD)
..... (Plastic)(In Valve Body)(w/Spring) 1999-Up 1
137951A ..... Spring, AW80-40LE/AW81-40LE/U440E 2nd Brake Accumulator (2.620"Long)(.630"OD)
..... (.090"Wire OD) 1999-Up 1
137951A-1 ..... Spring, AW80-40LE/AW81-40LE/U440E 2nd Brake Acculator (Inner)(1.710"Long)(.415"OD)
..... (.075"Wired OD) 1999-Up 1
137952A ..... Piston, AW80-40LE/AW81-40LE/U440E 2nd Brake Acculator (1.965"Long)(1.370"/.980"OD)
..... 1999-Up 1
137960AK ..... Piston Kit, AW81-40LE (Bonded) 2004-Up 1
137962A ..... Piston, AW80-40LE/AW81-40LE/U440E B1 Clutch (15 Spring Pockets)(Aluminum)(6.285"OD)
..... (1.850"Tall)(5.170"ID) 1999-Up 1
137964A ..... Piston, AW80-40LE/AW81-40LE/U440E C1 Clutch (Bonded) (4.440"OD)(1.175"Tall)(1.605"ID)
..... 1999-Up 1
137965A ..... Piston, AW80-40LE/AW81-40LE/U440E Direct (Aluminum)(w/20 Spring Pockets)(1.153"Tall)
..... (4.675"OD) 1999-Up 1
137967A ..... Piston, AW80-40LE/AW81-40LE/U440E B3 Clutch (.550"Thick)(5.655"OD)(6 Notches)(Aluminum)
..... (3.825"ID) 1999-Up 1
137968A ..... Piston, AW80-40LE/AW81-40LE/U440E B2 Clutch (6.575"OD)(5.530"ID)(.560"Tall)(8 Notches)
..... 1999-Up 1
137972A ..... Retainer w/Spring, AW80-40LE/AW81-40LE/U440E B1 Clutch (15 Springs)(6.665"OD)(5.175"ID)
..... (.755"Tall)(5 Spring Pockets 1999-Up 1
137974A ..... Retainer w/Springs, AW80-40LE/AW81-40LE/U440E C1-C3 Piston (Bonded)(18 Springs)
..... (2.750"OD)(1.115"Thick)(1.765"ID) 1999-Up 1
137975A ..... Spring & Retainer, AW80-40LE/AW81-40LE/U440E Direct (20 Springs)(1.115"ID)(3.448"OD)
..... (1.463"Tall Through Center) 1999-Up 1
137977A ..... Retainer, AW80-40LE/AW81-40LE/U440E B3 Clutch Piston Spring (12 Springs)(5.010"ID)
..... (1.055"Tall) 1999-Up 1
137978A ..... Retainer w/ Springs, AW80-40LE/AW81-40LE/U440E B2 Clutch (12 Springs)(5.960"ID)
..... (.105"Thick) 1999-Up 1
137980A ..... Spacer, AW80-40LE/AW81-40LE/U440E Outer Race To F1 Sprag (.020"Thick)(3.220"OD)
..... (2.400"ID) 1999-Up 1
137984A ..... Retainer, AW80-40LE/AW81-40LE/U440E C1-C3 Piston (Bonded)(18 Pockets)(1.150"ID)
..... (4.225"OD)(1.210"Thick) 1999-Up 1
137988A ..... Retainer, AW80-40LE/AW80-40LE/U440E B2 Clucth Piston (Tin)(5.380"ID)(.795"Thick)(One Hole
..... & One Tooth On OD) 1999-Up 1
137991-2A ..... Spring, AW80-40LE/AW81-40LE/U440E Detent (3.560"Long)(.660"Wide)(.275"OD Roller)
..... 1999-Up 1
137991-3A ..... Rooster Comb, AW80-40LE/AW81-40LE/U440E (6 Detent Notches)(.475"ID Hole)(.765"Thick)
..... 1999-Up 1
137991-4A ..... Shaft, AW80-40LE/AW81-40LE/U440E Manuel Linkage (.470"OD)(5.500"Long)(One Hole)
..... (Two Flats)(Threaded End) 1999-Up 1
277991-5A ..... Roll Pin, AW80-40LE/AW81-40LE/U440E Holds Internal Levers To Manual Shaft (.775"Long)
..... (.155"OD) 1999-Up 2
137991-8A ..... Sleeve, AW80-40LE/AW81-40LE/ U440E Manual Shaft (.490"Wide) 1999-Up 1
137993A ..... Manual Link, AW80-40LE/AW81-40LE/U440E (.195"OD)(2 Bends & Groove For C-Clip)
..... 1999-Up 1
137994A ..... Park Rod, AW80-40LE/AW81-40LE/U440E (3 Bends)(.705"OD Actuator)(5 1/2"Long) 1999-Up ... 1
137995A ..... Park Pawl Assembly, AW80-40LE/AW81-40LE/U440E 1

© Whatever It Takes Transmission Parts. Inc.

PART #	HARD PARTS (Continued)	QTY	REFERENCE #
137996A	Fitting, AW80-40LE/AW81-40LE/U440E Cooler Line (19mm Hex)(1.535”Long)(.280”ID) 1999-Up	2	
137999A	Lube Tube, AW80-40IE/AW81- 40LE/U440E In Bell (7 Bends)(16 1/4”long)(.252”OD) 1999-Up	1	
137999B	Lube Tube, AW80-40LE/AW81-40LE/U440E In Bell (8 3/4”Long)(6 Bends)(.252”OD) (1 Lube Hole) 1999-Up	1	

© Whatever It Takes Transmission Parts. Inc.

© Whatever It Takes Transmission Parts. Inc.

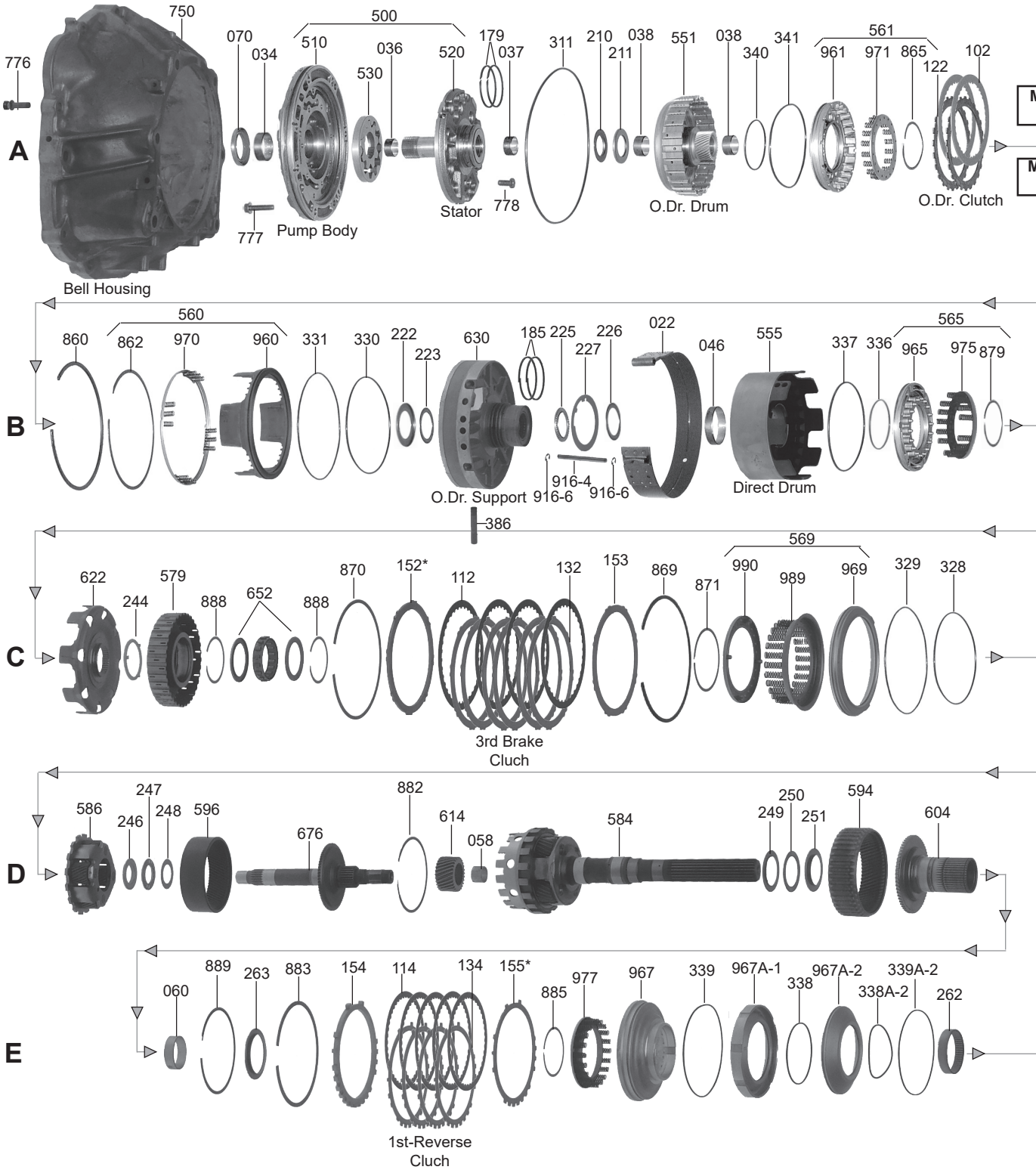

002 OHK Kit

004 Master L/Steels Kit

006 Master W/Steels Kit

011 Filter Kit

119 Friction Module

139 Steel Module

TOYOTA

© Whatever It Takes Transmission Parts. Inc.

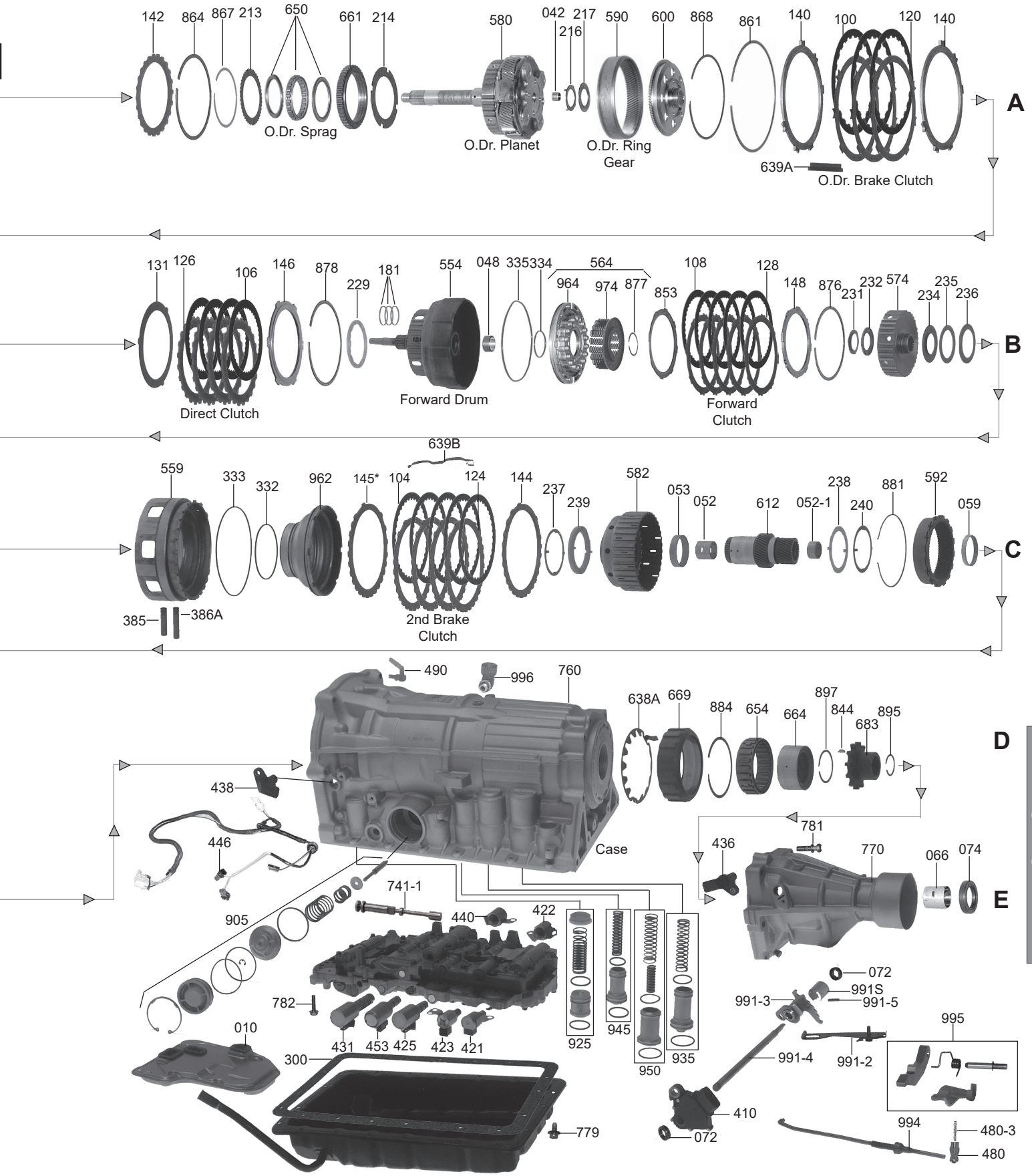

TOYOTA

© Whatever It Takes Transmission Parts. Inc.

PART #	OVERHAUL KITS	QTY	REFERENCE
187002A	Overhaul Kit, A650E (Lexus 5 Spd RWD) 1998-Up (Precision)	1	

PART #	MASTER L/STEEL KITS	QTY	REFERENCE
187004A	Master Less Steel, A650E(Lexus 5 Spd RWD) 1998-Up (Allomatic Frictions)	1	

PART #	MASTER W/STEELS KITS	QTY	REFERENCE
187006A	Master With Steel, A650E(Lexus 5 Spd RWD) 1998-Up (Allomatic Frictions)	1	

PART #	FILTERS	QTY	REFERENCE
187010B	Filter, A650E (Lexus GS300/400) (Oval Pick Up)(3 Bolts)(7 5/8"Long)(3 Straight Ribs) 1997-Up	1	
187010C	Filter, A650E (Oval Pick Up)(6 5/8" To 6 3/4"Long) (Crossed Ribs) 2000-Up	1	
187011BF	Filter Kit, A650E 1998-Up	1	

PART #	BANDS	QTY	REFERENCE
97022	Band, A650E 1998-06	1	

PART #	BUSHINGS	QTY	REFERENCE
57034A	Bushing, A650E Pump Body (1.500"ID)(Brass W/Oil Pockets) 1998-06	1	
57036B	Bushing, A650E Stator (Front)(.848"ID)(.680"Wide)(Babbit) 1998-06	1	
97037	Bushing, A650E Stator (Rear)(1.060"ID)(.680"Wide)(Brass) 1998-06	1	
97038	Bushing, A650E Overdrive Drum (Front & Rear) 1998-06	2	
97042	Bushing, A650E Overdrive Planet (Rear)(.440"ID) 1998-06	1	
97046	Bushing, A650E Direct Drum 1998-06	1	
187048A	Bushing, A650E Forward Drum (.780"ID)(Brass) 1998-06	1	
187052A	Bushing, A650E Front Planet Sungear (1.090"OD)(Front)(Brass) 1998-06	1	
187052A-1	Bushing, A650E Front Planet Sungear (1.090"OD)(Rear)(.595"Long)(4 Slots) 1998-06	1	
187053A	Bushing, A650E Front Planet (Brass)(1.750"ID)(2 Grooves) 1998-06	1	
187058A	Bushing, A650E Rear Planet (Brass)(.510"Wide)(.850"OD) 1998-06	1	
187059A	Bushing, A650E Front Planet Planet (1.620"OD)(.250"Wide) 1998-06	1	
187060A	Bushing, A650E Rear Planet Ring Gear Hub (1.514"ID) 1998-06	2	
97066	Bushing, A650E Extension Housing (1.575"ID)(40mm) 1998-06	1	

PART #	METAL CLAD SEALS	QTY	REFERENCE
57070A	Seal, A650E Pump 1998-06	1	
60072	Seal, A650E Manual Shaft (.275"Thick)(.875"OD)(In Bell) 1998-06	1	
97074	Seal, A650E Extension Housing (2wd)(40x58x11MM) 1998-06	1	

TOYOTA

PART #	FRICTIONS	QTY	REFERENCE
97100	Friction, A650E Overdrive Brake Clutch (.081"Thick)(24 Teeth)(6.500"OD) 1998-06	3	
97102	Friction, A650E Overdrive Clutch (.083"Thick)(32 Teeth) 1998-06	2	
187104A	Friction, A650E 2nd Brake (5.575"OD)(36 Teeth)(Waffled) 1998-06	5	
187106A	Friction, A650E Direct Clutch (.069"Thick)(5.180"OD)(40 Teeth) 1998-06	4	
97108B	Friction, A650E Forward Clutch (.078"Thick)(40 Teeth) 1998-06	5	
187112A	Friction, A650E 3rd Brake (5.940"OD)(.071"Thick)(36 Teeth) 1998-06	4	
187114A	Friction, A650E 1st-Reverse Clutch (.067"Thick)(5.422"OD)(20 Straight Grooves) 1998-06	5	
187119A	Friction Module, A650E(Lexus 5 Speed RWD)98-Up (Allomatic)	1	

PART #	STEELS	QTY	REFERENCE
97120	Steel, A650E Overdrive Brake Clutch (.079"Thick)(6 Teeth) 1998-06	3	
97122	Steel, A650E Overdrive Direct Clutch (.079"Thick)(24 Teeth) 1998-06	2	
187124A	Steel, A650E 2nd Brake (4.861"ID)(.113"Thick)(23 Teeth) 1998-06	4	
97126D	Steel, A650E Direct Clutch (.091"Thick)(24 Teeth) 1998-06	4	
187128A	Steel, A650E Forward Clutch (8 Teeth)(.070"Thick)(4.150"OD)		
187131A	Cushion Plate, A650E Direct (3T.)(.066"Thick)(Dished)(Bottom)(4.167"ID) 1998-06	1	
187132A	Steel, A650E 3rd Brake (.077"Thick)(5.175"ID)(8 Teeth) 1998-06	6	
187134A	Steel, A650E 1st-Reverse Clutch (4.875"ID)(18 Teeth) 1998-06	4	
187139A	Steel Module, A650E (Lexus 5 Spd Rwd)98-Up	1	

© Whatever It Takes Transmission Parts. Inc.

PART #	PRESSURE PLATES	QTY	REFERENCE
187140B	Pressure Plate, A650E Overdrive (Top & Bottom)(.138"Thick) 1998-06	2	
187142A	Pressure Plate, A650E Overdrive Direct Clutch (.141"/.164"Thick)(24 Teeth) 1998-06	1	
97142A	Pressure Plate, A650E Overdrive Direct Clutch (.134")(24 Teeth)(Stepped) 1985-Up	1	
187144A	Pressure Plate, A650E 2nd Brake (Top) (4.855"ID)(.155"Thick) 1998-06	1	
187145A	Pressure Plate, A650E 2nd Brake Reaction (4.850"ID)(23 Teeth)(#29) 1998-06 (Selective)	1	
97146B	Pressure Plate, A650E Direct Clutch (24 Teeth)(Stepped) 1998-06	1	
97148A	Pressure Plate, A650E Forward Clutch (.141"Thick)(8 Teeth) 1998-06	1	
187152A	Pressure Plate, A650E 3rd Brake (8 Teeth) (5.170"ID)(.157"Thick)(#40) 1998-06 (Selective)	1	
187153A	Pressure Plate, A650E 3rd Brake (8 Teeth)(5.175"ID)(.106"Thick) 1998-06	1	
187154A	Pressure Plate, A650E 1st-Reverse Clutch (5.810"OD)(.077"Thick) 1998-06	1	
187155A	Pressure Plate, A650E 1st-Reverse Clutch (4.867"OD)(.097"Thick)(#80 Or 08) 1998-06	1	

PART #	SEALING RINGS	QTY	REFERENCE
T187165A	Shift Kit, A650E 1998-Up (Transgo)	1	
97179	Ring, A650E Stator To Body 1998-06	2	
97181AT	Ring, A650E Forward (Scarf Cut)(1.260"OD)(Teflon) 1998-06	3	
187185AT	Ring, A650E Overdrive Support (Lap Joint)(Teflon) 1998-06	2	

PART #	WASHERS & BEARINGS	QTY	REFERENCE
97210	Race, A650E (.031"Thick)(1.857"OD)(1.110"ID) 1998-06	1	
97211	Bearing W/Race, A650E Stator (.130"Thick)(1.975"OD)(1.136"ID)	1	
97213	Washer, A650E Overdrive Sprag (Front)(44 Teeth)(.040"Thick)	1	
97214	Washer, A650E Overdrive Sprag (Rear)(44 Teeth)(.060"Thick) 1998-06	1	
97216	Race, A650E Overdrive Planet (4 Tab, 1.642"OD)(Front) 1998-06	1	
97217AK	Bearing W/Race, A650E Overdrive Planet To Ring Gear (1.845"OD) 1998-06	1	
97222	Race, A650E Overdrive Hub To Aluminum Support (2.313"OD) 1998-06	1	
97223A	Bearing W/Race, A650E Overdrive Hub To Aluminum Support (4 Tab Race) 1998-06	1	
97225	Race, A650E Forward Drum To Overdrive Support (2.00"OD) 1998-06	1	
187226A	Washer, A650E Overdrive Support To Direct Drum (2 Tabs) (3.070"OD)(2.353"ID) 1998-06	1	
97227	Bearing W/Race, A650E Forward Drum To Support (1.878"OD) 1998-06	1	
97229	Washer, A650E Forward Drum To Direct Drum (Plastic)(3 Tab)(2 7/8"OD) 1998-06	1	
187231A	Race, A650E Forward Drum To Hub (1.510"OD)(.125"Thick)(3 Outer Tabs) 1998-06	1	
187240A	Washer, A650E Front Planet To Rear Planet (4 Tabs)(Metal)(2.880"OD) 1998-06	1	
187232A	Bearing W/Race, A650E Forward Drum To Hub (1.728"OD)(.125"Thick) 1998-06	1	
187234A	Race, A650E Forward Hub To Shell (2.320"OD)(1.288"ID)(.031"/.115"Thick) 1998-06	1	
187235A	Bearing, A650E Forward Hub To Shell (2.345"OD)(.098"Thick) 1998-06	1	
187236A	Race, A650E Forward Hub To Shell (2.410"OD)(Cupped) 1998-06	1	
187237A	Washer, A650E Planet To Outer Sprag Race (Brass)(4 Tabs) (2.872"OD)(2.538"ID) 1998-06	1	
187238A	Washer, A650E Front Planet To Rear Planet (2 Tabs)(Plastic)(2.840"OD) 1998-06	1	
187239A	Spacer, A650E Planet To Washer (Plastic)(4 Round Tabs)(2.872"OD)(2.538"ID) 1998-06	1	
187240A	Washer, A650E Front Planet To Rear Planet (4 Tabs)(Metal)(2.880"OD) 1998-06	1	
187244A	Washer, A650E Shell To Clutch Hub (3 Tabs)(Plastic)(2.325"OD)(.113"Thick) 1998-06	1	
187246A	Race, A650E Front Planet To Ring Gear (Stepped)(1.705"OD)(1.020"ID) 1998-06	1	
187247A	Bearing, A650E Front Planet To Ring Gear (18 Needles)(1.705"OD) 1998-06	1	
187248A	Race, A650E Front Planet To Ring Gear (1.670"OD) (.031"Thick) 1998-06	1	
187249A	Race, A650E Rear Planet To 1st-Reverse Clutch Hub (2.223"OD)(1.550"ID) 1998-06	1	
187250A	Bearing, A650E Rear Planet To 1st-Reverse Clutch Hub (2.230"OD)(1.605"ID) 1998-06	1	
187251A	Race, A650E Rear Planet To 1st-Reverse Clutch Hub (2.352"OD)(1.620"ID) 1998-06	1	
187262A	Needle Bearing, A650E Case (1.930"ID)(.520"Wide)(Cast # DB504901 NSK) 1998-06	1	
187263A	Bearing W/Race, A650 Rear Planet To Case (2.770"OD) 1998-06	1	

PART #	GASKETS & RUBBER COMPONENTS	QTY	REFERENCE
97300	Gasket, A650E Bottom Pan 1998-06	1	
97300F	Gasket, A650E Bottom Pan (Farpak) 1998-06	1	
67311B	O-Ring, A650E Pump 1998-06	1	
187328A	O-Ring, A650E 3rd Brake Piston (Inner)(4.765"ID) 1998-06	1	
187329A	O-Ring, A650E 3rd Brake Piston (Outer)(5.985"OD) 1998-06	1	
97330	O-Ring, A650E Overdirve Brake (Inner)(.103"Thick)(5.395"ID) 1998-06	1	
97331	O-Ring, A650E Overdrive Brake (Outer)(6 1/4"OD)(.103"Thick) 1998-06	1	
187332A	O-Ring, A650E 2nd Brake (Small)(3.430"OD)(.103"Thick) 1998-06	1	
187333A	O-Ring, A650E 2nd Brake (Large) (5.510"OD)(.105"Thick) 1998-06	1	
97334	O-Ring, A650E Forward Clutch (Inner)(.105"Thick) 1998-06	1	
97335	O-Ring, A650E Forward Clutch (outer)(.117"Thick) 1998-06	1	
187338A	O-Ring, A650E 1st-Reverse Retainer Piston (Center)(3.095"ID)(.107"Thick) 1998-06	1	
187338A-2	O-Ring, A650E 1st-Reverse Retainer Piston (Rear)(Inner)(2.645"ID)(.107"Thick) 1998-06	1	

© Whatever It Takes Transmission Parts. Inc.

PART #	GASKETS & RUBBER COMPONENTS (Continued)	QTY	REFERENCE
187339A	O-Ring, A650E 1st-Reverse Retainer Piston (Front)(5.193"OD)(.107"Thick) 1998-06	1	
187339A-2	O-Ring, A650E 1st-Reverse Retainer Piston (Rear)(Outer)(4.715"OD)(.107"Thick) 1998-06	1	
187340A	Lip Seal, A650E Overdrive Drum (Inner)(.106"Thick) 1998-06	1	
187341A	Lip Seal, A650E Overdrive Drum (Outer)(.123"Thick) 1998-06	1	
187385A	Apply Tube, A650E Valve Body To 2nd Brake Drum (1.615"Long)(.360"OD) 1998-06	1	35159-30020
187386A	Apply Tube, A650E Valve Body To 3rd Brake Support (1.840"Long)(.365"OD) 1998-06	1	35148-30010
97386	Apply Tube, A650E Valve Body To Overdrive Support (1.992"Long)(.315"OD) 1998-06	1	35159-30010

PART #	ELECTRICAL COMPONENTS	QTY	REFERENCE
187410A	Switch, A650E PRNDL (1 Bolt To Case)(9 Blade Connector) 1998-06	1	
K0125	Tool, Toyota Neutral Safety Switch Remover (Superior) (Fits All Toyota Transmissions (RWD & FWD)1984-Up)	1	
187421A	Solenoids, A650E Shift (#1)(1.920"Long)(Black Connector)(Body Hole In End)(Metal Snout) (2 Bolt Bracket) 1998-06	1	
187422A	Solenoids, A650E Shift (#2)(1.310"Long)(Black Connector)(Body Big Hole In End) (Long Plastic Snout)(1 Bolt Bracket) 1998-06	1	
187423A	Solenoids, A650E Shift (#3) (2.015"long)(Black Connector)(Body X & Hole In End)(Plastic Snout) (2 Bolt Bracket) 1998-06	1	
187425A	Solenoids, A650E Shift (SLN) (3.170"Long)(Black Connector)(Body Flat End)(TCC) 1998-06	1	
187431A	Solenoid, A650E Shift (SLT) (4.073"Long)(Black Connector)(Body Flat End)(EPC) 1998-06	1	
97436A	Sensor, A650E VSS (OE #: 89411-50010) 1985-Up	1	
187440A	Solenoids, A650E Shift (#4) (1.310"Long)(Black Connector)(Body Small Hole In End) (Short Plastic Snout) 1998-06	1	
97446AD	Wire Harness, A650E Internal/External (W/7 Internal Connectors & 1 Sensor)(Main External Connector Is Rectangle W/12 Wires) 1998-06	1	
187453A	Solenoids, A650E Shift (SLU) (3.365"Long)(Black Connector)(Beveled Edge)(ACC) 1998-06	1	

PART #	MISCELLANOUS COMPONENTS	QTY	REFERENCE
187480A	Ball Plunger W/Spring, A650E (In Case Under Valve Body)(Plastic Housing) 1998-06	1	
187490A	Vent, A650E Case (Elbow) 1998-06	1	

PART #	HARD PARTS	QTY	REFERENCE
97510C	Pump Body W/Gears, A650E (W/.460"Thick Gears) 1998-06	1	
97520A	Stator, A650E (3 3/8" From Flat Surface To End Of Shaft) 1998-06	1	
187530A	Pump Gear Set, A650E (9 Inner & 11 Outer Teeth)(Lobe Type)(.460"Thick) 1998-06	1	
97551BA	Drum, A9650E Overdrive (31 Teeth Sun Gear)(2 Clutch) 1998-06	1	
187554A	Drum, A650E Forward Clu (5 Clutch)(8 Teeth Steels)(5" Piston)(8 Ovals In Direct Splines) 1998-06	1	
187555A	Drum, A650E Direct (24 Teeth Steels)(4 5/8"Piston) 1998-06	1	
187559A	Drum, A650E 3rd Brake (4 Clutchs)(9 Steels)(3.425"ID) 1998-06	1	
97561	Piston Kit, A650E Overdrive Direct Clutch (4.965"OD)(.760"Thick) 1998-06	1	
187560AK	Piston Kit, A650E Overdrive Brake 1998-06	1	
187564AK	PIston Kit, A650E Forward Clutch 1998-06	1	
187565AK	Piston Kit, A650E Direct Clutch 1998-06	1	
187569AK	Piston Kit, A650E 3rd Brake 1998-06	1	
187574A	Clutch Hub, A650E Forward (32 Outer Splines)(1.335"Tall)(10 Round Holes) 1998-06	1	
187579A	Clutch Hub, A650E 3rd Brake (Outer Race)(36T Friction)(1.250"Tall) 1998-06	1	
97580AA	Planet, A650E Overdrive With Shaft (33 Teeth Sun Gear)(20 Splines)(8 1/8"Overall Length 1998-06	1	
187582A	Planet, A650E Front (4 Gears)(16 Teeth Gears)(2.770"Tall) 1998-06	1	
187584A	Planet, A650E Rear (10 9/16" Output Shaft)(4 Gears)(8 Round Holes) 1998-06	1	
187586A	Planet, A650E Front (4 Gears) (21 Teeth Gears)(16 Lugs) 1998-06	1	
97590A	Ring Gear, A650E Overdrive Planet (33 Teeth Sun Gear)(4 5/8"OD) 1998-06	1	
187592A	Ring Gear, A650E Front Planet (16 Lugs)(1.020" Thick) 1998-06	1	
187594A	Ring Gear, A650E Rear Planet (66T RightAngle)(1.548"Thick)(44 Clutch Teeth) 1998-06	1	
187596A	Ring Gear, A650E Front Planet (73T Right Angle)(1.338"Thick) 1998-06	1	
97600A	Hub, A650E Overdrive Ring Gear (4"OD)(#222 Is 2 5/16"OD) 1998-06	1	
187604A	Hub, A650E Rear Planet Ring Gear (3.470"Tall)(45 Splines) 1998-06	1	
187612A	Sun Gear, A650E Front (4.220"Long)(31 Teeth/41 Teeth Right Angle)(38 Splines)(2 Bushings) 1998-06	1	
187614A	Sun Gear, A650E Intermediate Planet (28T Left Angle)(1.840"OD)(29 Spline) 1998-06	1	
187622A	Shell, A650E Input (8 Lugs)(1.283"Tall)(38 Splines) 1998-06	1	
187630A	Support, A650E Overdrive Planet (6 9/16"OD)(Cast 8937) (Has 4 Casting Holes) 1998-06	1	
187638A	Tensioner, A650E F2 Sprag To Case (4.632"OD)(.042"Thick)(2 Legs)(12 Inner Fingers) 1998-06	1	
187639A	Anti Clunk Spring, A650E Sets In Case (2.185"Long)(.585"Wide) 1998-06	1	

TOYOTA

© Whatever It Takes Transmission Parts. Inc.

187639B .....Anti Clunk Spring, A650E 1st-Reverse (3.867"Long)(Tapered)(.553"At Wide Ends) 1998-06.....1 .....
97650.....Sprag, A650E Overdrive (24 Lugs)(.450"Wide) 1998-06 .....1 .....
187652A .....Sprag, A650E Intermediate (16 Lugs) 1998-06.....1 .....
187654A .....Element, A650E F2 Sprag (24 Lugs)(1.030"Thick)(Cap & Element 1.180"Thick) 1998-06.....1 .....
97661.....Outer Race, A650E Overdrive Sprag (44 Teeth)(.530"Thick)(2.830"ID) 1998-06 .....1 .....
187664A .....Inner Race, A650E F2 Sprag (1.335"Thick)(2.730"OD) 1998-06.....1 .....
187669A .....Outer Race, A650E F2 Sprag To Case (16 Outer Lugs)(1.357"Thick)(3.475"ID)
.....(Flat Edge In Front) 1998-06.....1 .....
187676A .....Shaft, A650E Intermediate (9 1/4"Long)(73 Teeth Hub)(2 Splines)(4 Bushing Lands) 1998-06 .....1 .....
187678A .....Shaft, A650E Intermediate (9 1/4"Long)(73 Teeth Hub) 1998-06.....1 .....
187683A .....Reluctor, A650E Output (12 Lugs)(1.380"Tall)(2 Keyway Slots) 1998-06 .....1 .....
187740A .....Valve Body, A650E (Cast #8937)(7 Solenoids).....1 .....

PART #	VALVE BODY COMPONENTS	QTY	REFERENCE

187741-1A .....Manual Valve, A650E (5 5/8"Long) 1998-06 .....1 .....
S97741CAK....Valve & Sleeve Kit, A650E Lockup Relay Control 1998-06 (Sonnax).....1 .....

PART #	HARD PARTS (Continued)	QTY	REFERENCE

97750J.....Bell Housing, A650E (Cast # 8946 By Bottom Case Bolt Rear) 1998-06 .....1 .....
187760A .....Case, A650E (Driver Side Input Sensor)(16 1/2"Long)(8 Threaded Holes For Any Tail Housing)
.....1998-06 .....1 .....
187765A .....Pan, A650E Bottom (19 Bolts)(8 Ribs)(2 3/4" Deep)(Dipstick Tube 10"Long On Driver
.....Side Front) .....1 .....
187770A .....Tail Housing, A650E (10"Long)(6 Bolt)(4 Bolt Mount)(Driver Sude Output Sensor) 1998-06 .....1 .....
97776A .....Bolt Set, A650E Bell To Case (6 Per Set) 1998-06 .....1 .....
97777AK.....Bolt Set, A650E Pump To Case (7 Pieces)(12mm Hex)(1.650"Long) 1998-06.....1 .....
97778K .....Bolt Set, A650E Pump Stator To Body (13 Per Set) 1998-06 .....1 .....
97779K .....Bolt Set, A650E Bottom Pan To Case (19 Per Set) 1998-06 .....1 .....
117781ACK ....Bolt Set, A650E (4x4) Extension Housing To Case (8 Pieces) 2003-Up.....1 .....
117781BK .....Bolt Set, A650E (2wd) Extension Housing To Case (6 Pieces) 2004-Up.....1 .....
187782AK.....Bolt Set, A650E Valve Body To Case (20 Pieces) 1998-06.....1 .....
97844.....Key, A650E Holds Speed Rotor To Output Shaft 1998-06 .....1 .....
97853.....Cushion, A650E Forward Clutch Steel (8 Teeth)(Beveled) 1998-06 .....1 .....
97860.....Snap Ring, A650E Holds Aluminum Support In Case 1998-06.....1 .....
97861.....Snap Ring, A650E Holds Overdrive Pressure Plate In Case 1998-06.....1 .....
97862.....Snap RIng, A650E Holds Overdrive Brake Clutch Retainer In (6 5/8"OD)(.193"Thick ID To OD)
.....1998-06 .....1 .....
97864.....Snap Ring, A650E Holds Overdrive Direct Clutch Pressure Plate In 1998-06 (5 5/16" OD)
.....(.245" Thick ID To OD) .....1 .....
97865.....Snap Ring, A650E Holds Overdrive Direct Clutch Retainer In 1998-06.....1 .....
97867.....Snap Ring, A650E Holds Overdrive Sprag To O.Dr. Planet 85-Up (.038"Thick)(3 15/16"OD) .....1 .....
97868A .....Snap Ring, A650E Holds Overdrive Hub To Ring Gear (5 1/4"OD) .....1 .....
187869A .....Snap Ring, A650E 3rd Brake Drum To Case (6 13/16"OD)(Beveled)(.142"Thick) 1998-06 .....1 .....
187870A .....Snap Ring, A650E 3rd Brake (6 7/16"OD)(.078"Thick) 1998-06.....1 .....
187871A .....Snap Ring, A650E 3rd Brake Piston Kit (3.445"OD)(.040"Thick) 1998-06.....1 .....
187876A .....Snap Ring, A650E Forward (5.290"OD)(.245"Wide)(.071"Thick) 1998-06 (Can Use 97864).....1 .....
97877.....Snap Ring, A650E Holds Forward Clutch Retainer In Drum 1998-06.....1 .....
97878B .....Snap RIng, A650E Holds Direct Clutch Pressure In Drum (5 3/4"OD) 1998-06 .....1 .....
97879.....Snap Ring, A650E Holds Direct Clutch Retainer In Drum 1998-06 .....1 .....
187881A .....Snap Ring, A650E Front Planet Ring Gear (4.460"OD)(.070"Thick) 1998-06 .....1 .....
187882A .....Snap Ring, A650E Intermediate Shaft To Hub To Ring Gear (4.064"OD)(.160"Wide) 1998-06.....1 .....
187883A .....Snap Ring, A650E 1-Reverse Clutch (5.810"OD)(.077"Thick) 1998-06.....1 .....
187884A .....Snap Ring, A650E Holds F2 Sprag (3.760"OD)(.047"Thick) 1998-06 .....2 .....
187885A .....Snap Ring, A650E 1-Reverse Clutch Retainer (2.713"OD)(.031"Thick) 1998-06.....1 .....
187888A .....Snap Ring, A650E Intermediate Sprag (2.525"OD)(.039"Thick) 1998-06.....1 .....
187889A .....Snap Ring, A650E Rear Planet Ring Gear Hub (4.713"OD)(.055"Thick) 1998-06 .....1 .....
187895A .....Snap Ring, A650E Reluctor To Output Shaft (1.320"OD)(.057"Thick) 1998-06 .....1 .....
187897A .....Snap Ring, A650E F2 Sprag To Output Shaft (2.063"OD)(.046"Thick) 1998-06.....2 .....
187905A .....Servo Assy, A650E (3 1/8"Pin)(2 Stripes) 1998-06 .....1 .....
97916-4A.....Band Pin, A650E Case To Band (3.110"Long)(.253"OD) .....1 .....
97916-6A.....C-Clip, A650E Band Pin (Both Ends)(.023"Thick)(.435"OD) 1998-06.....2 .....
187925A .....Accum Assy, A650E (3 Pieces)(Cap/Spring/Aluminum Piston) 1998-06 .....1 .....
187935A .....Accum Assy, A650E (2 Pieces)(Spring & Aluminum Piston) 1998-06.....1 .....
187945A .....Accum Assy, A650E (2 Pieces)(Spring & Aluminum Piston) 1998-06.....1 .....
187950A .....Accum Assy, A650E (3 Pieces)(2 Springs & Aluminum Piston) 1998-06 .....1 .....
187960A .....Piston, A650E Overdrive Brake Clutch (6 1/4"OD)(.925"Tall)(Used With Support Cast # 8937)
.....1998-06 .....1 .....
97961.....Piston,A650E Overdrive Clutch 1998-06 .....1 .....

© Whatever It Takes Transmission Parts. Inc.

PART #	HARD PARTS (Continued)	QTY	REFERENCE
187962A	Piston, A650E 2nd Brake (2.375”Tall)(3.125”ID)(22 Outer Lugs) 1998-06	1	
187964A	Piston, A650E Forward Clutch (5.010”OD)(1.581”ID)(Cast 30A010 30D010 1 AK) 1998-06	1	
97965	Piston, A650E Direct Clutch (4 5/8”OD) 1998-06	1	
187967A	Piston, A650E 1st-Reverse (Front)(5.400”OD)(1.610”Tall) 1998-06	1	
187967A-1	Piston, A650E 1st-Reverse (Center)(4.980”OD)(.675”Thick) 1998-06	1	
187967A-2	Piston, A650E 1st-Reverse (Rear)(4.695”OD)(.705”Thick) 1998-06	1	
187969A	Piston, A650E 3rd Brake (Aluminum)(5.945”OD)(.573”Thick) 1998-06	1	
97970	Retainer W/Springs, A650E Overdrive Brake Clutch (6 1/4”OD) 1998-06	1	
97971	Retainer W/Springs, A650E Overdrive Direct Clutch Return	1	
187974A	Retainer W/Springs, A650E Forward Clutch (18 Springs)(1.2056”Tall)(1.515”ID) 1998-06	1	
187975A	Retainer W/Springs, A650E Direct (15 Springs)(.910”Tall) 1998-06	1	
187977A	Retainer, A650E 1st-Reverse (3.838”OD)(20 Springs)(.770”Tall) 1998-06	1	
187989A	Retainer W/Springs, A650E 3rd Brake (24 Springs)(5.193”OD) 1998-06	1	
187990A	Retainer, A650E 3rd Brake (Top)(4.690”OD)(3.355”ID) 1998-06	1	
187991A-3	Rooster Comb, A650E (6 Detents)(.278”ID Park Rod Hole) 1998-06	1	
97991A-2	Dentent Spring, A650E Linkage (4 13/16”Long)(3 Pieces) 1998-06	1	
187991A-4	Shaft, A650E Linkage (10 1/2” Long)(.472D)(Flat On Both Ends) 1998-06	1	
67991S	Sleeve, A650E Holds Pin On Linkage Shaft 1998-06	1	
187994A	Park Rod, A650E (11 1/2”Long)(Yellow Spring) 1998-06	1	
187995AK	Park Pawl Assembly, A650E (3 Pieces) 1998-06 (Pawl Is 5.140”Long)(Bracket Acuator 2.610”Long W/ 3 Bolts To Case)(Pivot Pin Is 2.363”Long)	1	
97996A	Fitting, A650E Cooler Line (Elbow)(2”Tall) 1998-06	1	

© Whatever It Takes Transmission Parts. Inc.

© Whatever It Takes Transmission Parts. Inc.

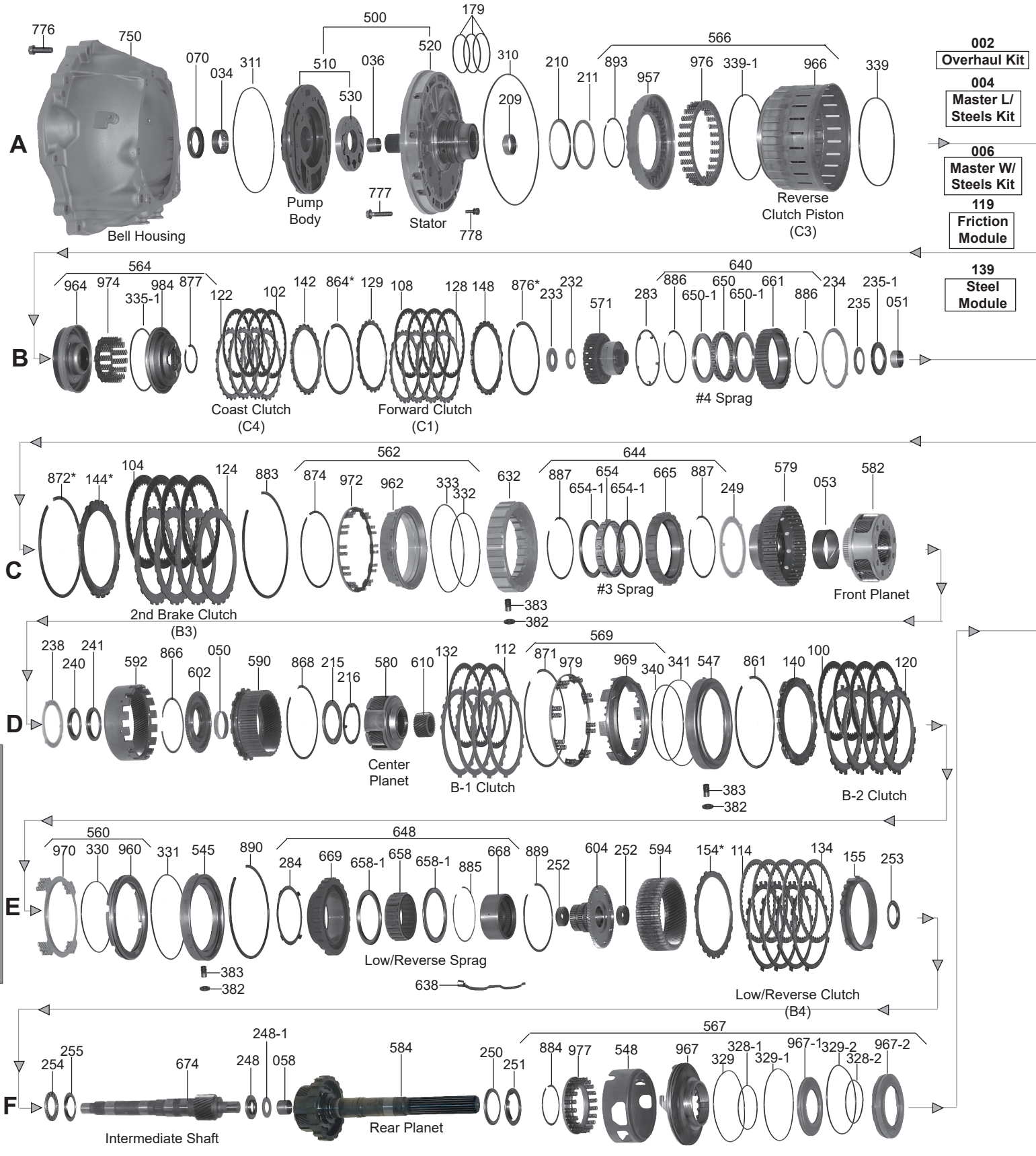
A
776
750
Bell Housing
070
034
311
500
510
530
036
520
179
310
209
Pump Body
777
Stator
778
210
211
893
957
566
976
339-1
966
339
Reverse Clutch Piston (C3)
002
Overhaul Kit
004
Master L/ Steels Kit
006
Master W/ Steels Kit
119
Friction Module
139
Steel Module
B
564
964
974
335-1
984
877
122
102
142
864*
129
108
128
148
876*
233
232
571
640
283
886
650
661
650-1
650-1
886
234
235-1
235
051
Coast Clutch (C4)
Forward Clutch (C1)
#4 Sprag
C
872*
144*
104
124
883
562
874
972
962
333
332
632
644
887
654
654-1
654-1
665
887
249
579
053
582
2nd Brake Clutch (B3)
383
382
#3 Sprag
Front Planet
D
238
240
241
592
866
602
050
590
868
215
216
580
610
132
112
569
871
979
969
340
341
547
861
140
100
120
Center Planet
B-1 Clutch
383
382
B-2 Clutch
E
560
970
330
960
331
545
890
648
284
669
658-1
658
658-1
885
668
889
252
604
252
594
154*
114
134
155
253
383
382
Low/Reverse Sprag
638
Low/Reverse Clutch (B4)
F
254
255
674
248-1
248
058
584
250
251
567
884
977
548
967
328-1
329
329-1
967-1
329-2
328-2
967-2
Intermediate Shaft
Rear Planet

TOYOTA

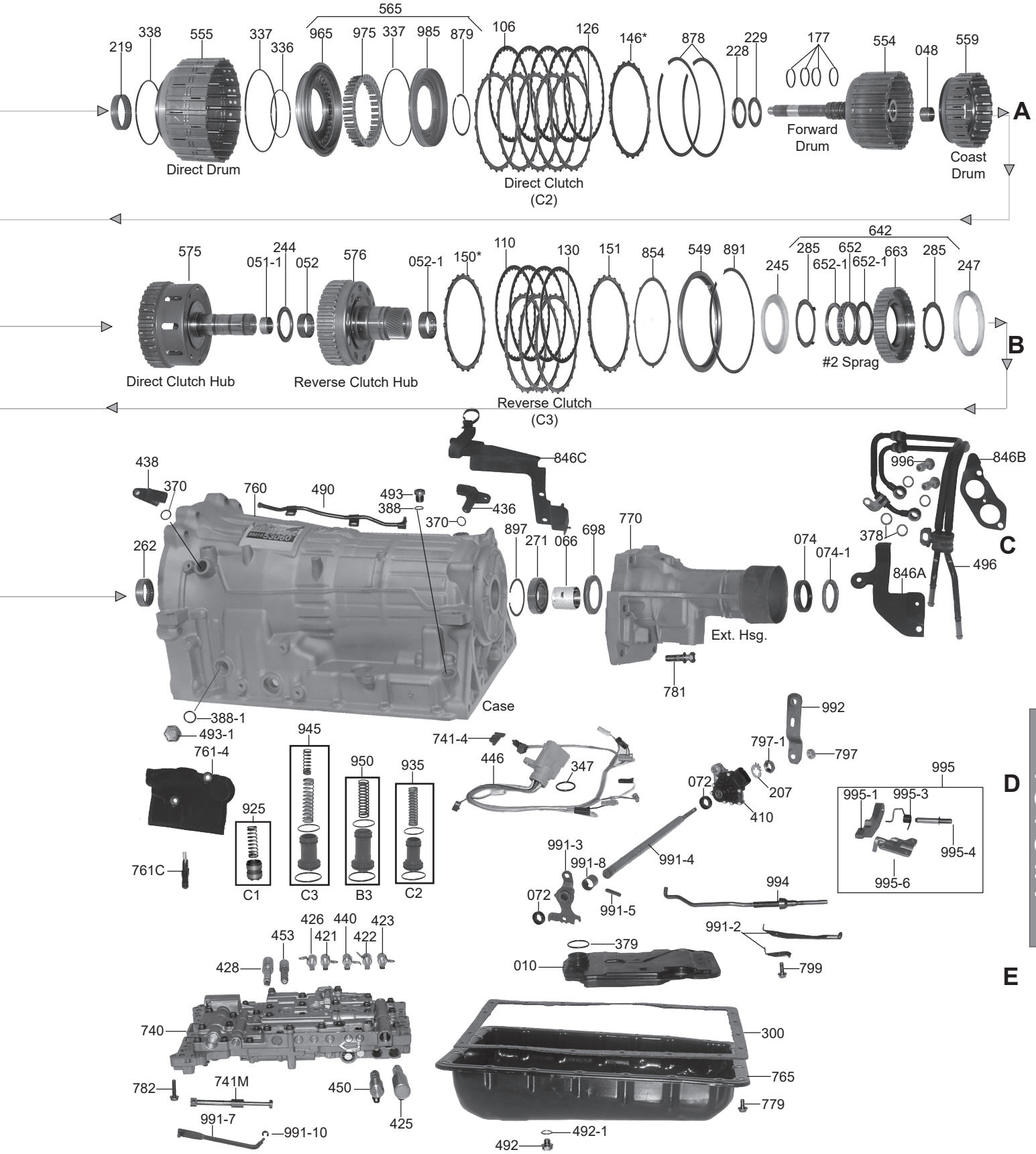

© Whatever It Takes Transmission Parts. Inc.

PART #	OVERHAUL KIT	QTY	REFERENCE #
267002A	Overhaul Kit, A960E 2006-Up (For Bonded Pistons Sell A267960AK)	1	

PART #	MASTER L/STEELS	QTY	REFERENCE #
267004A	Master L/Steels, A960E 2006-Up (For Bonded Pistons Sell A267960AK)	1	

PART #	MASTER W/STEELS	QTY	REFERENCE #
267006A	Master W/Steels, A960E 2006-Up (For Bonded Piston Sell A267960AK)	1	

PART #	FILTERS	QTY	REFERENCE #
267010A	Filter, A960E 2006-Up (Some 4 Bolt Plastic) (Can Use A117010B)	1	35330-30090
267010B	Filter, A960E 2006-Up (Some 4 Bolt Metal)(7 Ribs) (Precision) (Can Use 117010A)	1	35330-22040

PART #	BUSHINGS	QTY	REFERENCE #
57034A	Bushing, A960E Pump Body (1.500"ID)(Brass W/Oil Pockets) 2006-Up	1	
57036CB	Bushing, A960E Stator (Front & Rear)(.856"ID)(.980"OD)(.680"Wide) 2006-Up	1	
267048A	Bushing, A960E Forward Drum (.712"ID)(.825"OD)(Brass) 2006-Up	1	
267050A	Bushing, A960E Front Planet Hub (1.810"ID)(.225"Wide) (Brass)(2 Grooves) 2006-Up	1	
267051-1A	Bushing, A960E Rear Direct Hub (Dimple)(.905"ID)(1.023"OD)(Brass) 2006-Up	1	
267051A	Bushing, A960E Front Direct Clu Hub (4 Slots)(Brass)(.905"ID)(1.023"OD) 2006-Up	1	
267052A	Bushing, A960E Reverse Clutch Hub (Front)(Brass)(1.310"ID)(.690"Wide) 2006-Up	1	
267052-1A	Bushing, A960E Reverse Clutch Hub (Rear)(Brass)(No Grooves)(1.310"ID)(.450"Wide) (1.375"OD) 2006-Up	1	
267053A	Bushing, A960E Front Planet (1.920"ID)(2.050"OD)(Brass) 2006-Up	1	
267058A	Bushing, A960E Intermediate To Rear Planet (.710"ID) (.595"Long) 2006-Up	1	
97066	Bushing, A960E Extention Housing (1.575"ID)(40mm) 2006-Up	1	

PART #	METAL CLAD SEALS	QTY	REFERENCE #
57070A	Seal, A960E Pump 2006-Up	1	
60072	Seal, A960E Manual Shaft (.275"Thick)(.875"OD)(In Bell) 2006-Up	2	
97074	Seal, A960E Extension Housing (2WD) 2006-Up	1	
267074-1A	Seal Retainer, A960E Extension Housing (Metal)(W/6 Holes)(.278"Thick)(2.290"OD)(1.645"ID) (Cast # 35188-35020) 2006-Up	1	

PART #	FRICTIONS	QTY	REFERENCE #
267100A	Friction, A960E B2 Clutch (.060"Thick)(4.863"OD)(35 Teeth) 2006-Up	4	
267102A	Friction, A960E Coast Clutch (30 Teeth)(.062"Thick)(4.045"OD) 2006-Up	4	
267104A	Friction, A960E 2nd Brake (.072"Thick)(5.955"OD)(36 Teeth) 2006-Up	4	
267106A	Friction, A960E Direct (36 Teeth)(.061"Thick)(5.978"OD) 2006-Up	5	
267108A	Friction, A960E Forward Clutch (.059"Thick)(30 Teeth)(4.245"OD) 2006-Up	4	
267110A	Friction, A960E Reverse Clutch (.060"Thick)(40 Teeth)(5.975"OD) 2006-Up	4	
267112A	Friction, A960E B1 Clutch (.075"Thick)(5.735"OD) 2006-Up	3	
267114A	Friction, A960E Low-Reverse (.060"Thk)(4.880"OD)(42 Teeth) 2006-Up	5	
267119A	Fri Module, A960E 2006-Up	1	

PART #	STEELS	QTY	REFERENCE #
267120A	Steel, A960E B2 Clutch (13 Teeth)(.078"Thick)(4.090"ID) 2006-Up	4	
267122A	Steel, A960E Coast Clutch (24 Teeth)(3.545"ID)(.070"Thick) 2006-Up	4	
267124A	Steel, A960E 2nd Brake (.078"Thick)(4.675"ID)(16 Teeth) 2006-Up	4	
267126A	Steel, A960E Direct (24 Teeth)(.071"Thick)(5.480"ID) 2006-Up	5	
267128A	Steel, A960E Forward Clutch (24 Teeth)(.070"Thick)(3.690"ID) 2006-Up	4	
267129A	Cushion, A960E Forward Clutch (12 Teeth)(Dished)(.062"Thick)(3.720"ID) 2006-Up	1	
267130A	Steel, A960E Reverse Clutch (.094"Thick)(24 Teeth)(5.400"ID) 2006-Up	3	
267132A	Steel, A960E B1 Clutch (12 Teeth)(5.010"ID)(.095"Thick) 2006-Up	4	
267134A	Steel, A960E Low-Reverse (16 Teeth)(.070"Thick)(4.335"ID) 2006-Up	4	
267139A	Steel Module, A960E 2006-Up	1	

PART #	PRESSURE PLATES	QTY	REFERENCE #
267140A	Pressure Plate, A960E B2 Clutch (17 Teeth)(12 Spring Dimples)(4.100"ID)(.180"/.250"Thick) (5.705"OD) 2006-Up	1	
267142A	Pressure Plate, A960E Coast Clutch (24 Teeth)(3.545"ID)(.128"Thick) 2006-Up	1	

© Whatever It Takes Transmission Parts. Inc.

267144A.....Pressure Plate, A960E 2nd Brake (Top)(16 Teeth)(.157"Thick)(4.675"ID) 2006-Up.....1
267146A.....Pressure Plate, A960E Direct (24 Teeth) (.134"Thick)(5.480"ID) 2006-Up.....1
267148A.....Pressure Plate, A960E Forward Clutch (24 Teeth)(3.690"ID)(.137"Thick) 2006-Up.....1
267150A.....Pressure Plate, A960E Reverse Clutch (20 Teeth)(.117"Thick)(5.390"ID) 2006-Up.....1
267151A.....Pressure Plate, A960E Reverse Clutch (.122"Thick)(20 Teeth)(#7)(5.400"ID) 2006-Up.....1
267154A.....Pressure Plate, A960E Low-Reverse (Top)(16 Teeth)(Stepped)(4.340"ID)(#8) 2006-Up.....1
267155A.....Pressure Plate, A960E Low-Reverse Reaction (16 Teeth)(4.330"ID)(.620"Thk)(Steeped OD)
.....2006-Up.....1

PART #	SEALING RINGS	QTY	REFERENCE #

267177A.....Ring, A960E Input Shaft (1.205"OD)(.089"Thick) 2006-Up.....4
117179AT.....Ring, A960E Stator To Direct Drum (.090"Thick)(2.655"OD)(Teflon) 2006-Up.....3

PART #	WASHERS & BEARINGS	QTY	REFERENCE #

117209A.....Caged Needle Bearing, A960E Stator (Rear)(1.540"OD)(Cast # 08503406) 2006-Up.....1
117210A.....Race, A960E Stator To Direct Drum (3.445"OD)(2.930"ID) 2006-Up.....1
117211A.....Bearing W/Race, A960E Stator To Direct Drum (.110"Thick)(3.360"OD)(2.835"ID) 2006-Up.....1
267215A.....Bearing W/Race, A960E Hub To Center Planet (2.885"OD)(2.305"ID) 2006-Up.....1
267216A.....Race, A960E Hub To Center Planet (4 ID Tabs)(2.795"OD)(.078"Thick) 2006-Up.....1
117219A.....Caged Needle Bearing, A960E Direct Drum (Front)(.550"Wide)(2.375"OD)
.....(Cast # KOYO BSM556014BJ-1) 2006-Up.....1
267228A.....Race, A960E Stator To Forward Drum (2.010"OD)(1.440"ID) 2006-Up.....1
267229A.....Bearing W/Race, A960E Stator To Forward Drum (2.010"OD)(1.440"ID) 2006-Up.....1
267232A.....Bearing W/Race, A960E Forward Clutch Drum To Hub (.790"ID)(1.603"OD)(.150"Thick)
.....2006-Up.....1
267233A.....Race, A960E Forward Clutch Drum To Hub (1.395"OD)(.785"ID)(.165"Thick) 2006-Up.....1
267234A.....Washer, A960E Sprag To Hub (3 Tab Plastic)(.060"Thick)(3.665"OD)(3.100"ID) 2006-Up.....1
267235-1A.....Bearing W/Race, A960E Sprag To Hub (2.005"OD)(1.315"ID)(.110"/.250"Thick) 2006-Up.....1
267235A.....Race, A960E Sprag To Hub (1.878"OD)(1.225"ID)(.032"/.112"Thick) 2006-Up.....1
267238A.....Washer, A960E Front Planet To Hub (3.300"OD)(2.360"ID)(3 Round Tabs)(Plastic) 2006-Up.....1
267240A.....Race, A960E Front Planet Sungear To Hub (1.990"OD)(1.380"ID)(.078"/.196"Thick) 2006-Up.....1
267241A.....Bearing W/Race, A960E Front Planet Sungear To Hub (2.080"OD) (1.523"ID)(.110"/.205"Thick)
.....2006-Up.....1
117244A.....Bearing W/Race, A960E Direct Clutch Hub To Reverse Clutch Hub (.140"Thick)(2.400"OD)
.....1.680"ID) 2006-Up.....1
267245A.....Washer, A960E Reverse Clutch To #2 Sprag (Dished)(3.630"OD)(4 Legs)(2.510"ID) 2006-Up.....1
267247A.....Washer, A960E #2 Sprag To Outer Race (4.045"OD)(.220"/.350"Thick)(4 Tab)(Plastic) 2006-Up.1
267248-1A.....Bearing W/Race, A960E Intermediate Sungear To Rear Planet (.128"/.243"Thick)(1.510"OD)
.....(.820"ID) 2006-Up.....1
267248A.....Race, A960E Intermediate Sungear To Rear Planet (.082"Thick)(1.900"ID)(3.485"OD) 2006-Up..1
267249A.....Washer, A960E #3 Sprag To Inner Race (3.803"OD)(.060"Thick)(Plastic)(3 Round Tabs)
.....2006-Up.....1
267250A.....Race, A960E Rear Planet To Case (2.230"OD)(1.710"ID) (Cupped) 2006-Up.....1
267251A.....Bearing W/Race, A960E Rear Planet To Case (2.230"OD)(1.710"ID)(26 Needles) 2006-Up.....1
267252A.....Needle Bearing, A960E Rear Planet Hub (Front)(1.245"OD)(NSK 08502714W) 2006-Up
.....(Also Fits Rear Planet Hub (Rear).....1
267253A.....Race, A960E Low-Reverse Hub To Sungear (1.760"OD)(1.170"ID)(.046"Thick) 2006-Up.....1
267254A.....Bearing, A960E Low-Reverse Hub To Sungear (1.715"OD)(.156"Thick)(1.100"ID) 2006-Up.....1
267255A.....Race, A960E Low-Reverse Hub To Sungear (.117"Thick)(1.715"OD) 2006-Up.....1
267262A.....Bearing, A960E Caged Needle To Case (1.430"ID)(Cast # NSK DB503607W Or D8503607W)
.....2006-Up.....1
267271A.....Ball Bearing, A960E O.P. Shaft To Ext Housing (Some 2WD)(6 Bolt Housing)(2.440"OD)
.....(1.345"ID)(NSK B34Z-5E1) 2006-Up.....1
267283A.....Washer, A960E (Front)(5 Legs)(3.085"OD)(.060"Thick) 2006-Up.....1
267284A.....Retainer, A960E Low-Reverse Sprag (2.910"ID)(3.370"OD)(.024"Thick)(4 Tabs) 2006-Up.....1
267285A.....Retainer, A960E #2 Sprag (2.945"OD)(.024"Thick) (2.305"ID)(4 Legs) 2006-Up.....2

PART #	GASKETS & RUBBER COMPONENTS	QTY	REFERENCE #

267300A.....Gasket, A960E Pan (Cork) 2006-Up.....1
267310A.....O-Ring, A960E Stator (Outer)(8 3/4"OD)(.130"Thick) 2006-Up.....1
267311A.....O-Ring, A960E Pump Body (Outer) (6 11/16"OD)(.105"Thick) 2006-Up.....1
267328-1A.....O-Ring, A960E Low-Reverse Balance (Inner)(2.705"ID)(.105"Thick) 2006-Up.....1
267328-2A.....O-Ring, A960E Low-Reverse Balance (Inner)(2.245"ID)(.105"Thick) 2006-Up.....1
267329-1A.....O-Ring, A960E Low-Reverse Balance (Outer)(4.370"OD)(.105"Thick) 2006-Up.....1
267329-2A.....O-Ring, A960E Low-Reverse Balance (Outer)(4.000"OD)(.100"Thick) 2006-Up.....1
267329A.....O-Ring, A960E Low-Reverse Piston (4.940"OD)(.105"Thick) 2006-Up.....1

\

© Whatever It Takes Transmission Parts. Inc.

PART #	GASKETS & RUBBER COMPONENTS (Continued)	QTY	REFERENCE #
267330A	O-Ring, A960E B2 Clutch Piston (Inner)(4.005”ID)(.107”Thick) 2006-Up	1	
267331A	O-Ring, A960E B2 Clutch Piston (Outer)(5.050”OD)(.103”Thick) 2006-Up	1	
267332A	O-Ring, A960E 2nd Brake (Inner)(4.695”ID)(.102”Thick) 2006-Up	1	
267333A	O-Ring, A960E 2nd Brake (Outer)(5.705”OD)(.102”Thick) 2006-Up	1	
267335-1A	D-Ring, A960E Coast/Forward Retainer (Outer)(3.840”OD)(.090”Thick) 2006-Up	1	
267336A	O-Ring, A960E Direct Piston (Inner)(2.810”ID)(.110”Thick) 2006-Up	1	
267337A	O-Ring, A960E Direct Piston (Outer)(5.030”OD)(.125”Thick) 2006-Up	1	
267338A	O-Ring, A960E Direct Piston (Small)(4.135”OD)(.125”Thick) 2006-Up	1	
267339-1A	O-Ring, A960E Reverse Clutch (Outer)(5.615”OD)(.125”Thick) 2006-Up	1	
267339A	O-Ring, A960E Direct Piston (Large)(5 5/8”OD)(.125”Thick) 2006-Up	1	
267340A	O-Ring, A960E B1 Clutch Piston (Inner)(.107”Thick)(4.320”ID) 2006-Up	1	
267341A	O-Ring, A960E B1 Clutch Piston (Outer)(.107”Thick)(5.475”OD) 2006-Up	1	
267370A	O-Ring, A960E Input & Output Sensors 2006-Up	1	
267378A	Washers, A960E Cooler Line Bolts (.790”OD)(.560”ID)(.053”Thick) 2006-Up	4	
117379A	O-Ring, A960E Filter To Valve Body 2006-Up	1	
117382A	Seal Collar, A960E 2nd Brake Support, B1 Clutch Retainer & B2 Clutch Retainer (.600”OD)(.375”ID)(.145”Thick) 2006-Up	3	
117383A	Seal Tube, A960E 2nd Brake Support, B1 Clutch Retainer & B2 Clutch Retainer (.310”OD)(.575”Long)(Bonded Tubes)	3	
117388A	O-RIng, A960E Fill Plug (Driver Side Rear) 2006-Up	1	
117388-1A	O-Ring, A960E Fluid Level Check 2006-Up	1	

PART #	ELECTRICAL COMPONENTS	QTY	REFERENCE #
267410A	PRNDL Switch, A960E (7 Pin & 2 Blade Connector)(1 Bolt To Case) 2006-Up	1	
117421B	Solenoid, A960E S1 (Shift A)(1 Pin Black Connector At 12:00)(W/Square Hole In The Metal End)(W/1 Bolt Bracket) 2006-Up	1	
117422B	Solenoid, A960E S2 (Shift B)(2 Pin Green Connector At 2:00)(W/Square Hole In The Metal End)2006-Up	1	
117423B	Solenoid, A960E Use 117421B	1	
117425A	Solenoid, A960E SLU (TCC Control)(2 Blade Grey Connector)(3 5/16”Long) 2006-Up	1	
117426B	Solenoid, A960E SR (Shift E)(1 Pin Green Connector At 12:00) (W/Square Hole In The MetalEnd) 2006-Up	1	
117428A	Solenoid, A960E SLT (Pressure D)(2 Blade Grey Connector)(3 7/8”Long) 2006-Up	1	
117436A	Sensor, A960E Output (2 Blade Connector)(1 Bolt)(Driver and Passanger Side) 2006-Up	2	
117440B	Solenoid, A960E S4 (Shift D)(1 Pin Blue Connector At 12:00)(W/Large Round Hole In The MetalEnd)(W/1 Bolt Bracket) 2006-Up	1	
117450A	Solenoid, A960E Use 117453A	1	
117453A	Solenoid, A960E SL1 (Pressure A)(2 Blade Black Connector)(No Hole In Metal End) 2006-Up	1	

PART #	MISCELLANEOUS COMPONENTS	QTY	REFERENCE #
117490B	Vent, A960E Top Case (9 1/4”Long)(2 Bolt) 2006-Up	1	
267490A	Vent Tube, A960E (5 3/8”Long)(1 Bracket)(90 Degrees)(7 Bolt Extention Housing Units)2006-Up	1	
117493A	Fill Plug, A960E (Rear Drivers Side)(.715”Long) 2006-Up	1	
117493-1B	Check Plug, A960E Fluid Level (.705”Long)(24MM Hex)(Front Drivers Side) 2006-Up	1	
267496AK	Cooler Line Set, A960E Banjo Fittings To Case (Slip On Ends)(2-1 Bolt Brackets)(Metal OverRubber) 2006-Up	1	

PART #	HARD PARTS	QTY	REFERENCE #
267500A	Pump, A960E (9 Bolts To Case)(3 Ring Grooves) 2006-Up	1	
267510A	Pump Body, A960E (6 5/8”OD)(9 Inner Teeth)(10 Outer Teeth)(3 Worm Tracks) 2006-Up	1	
267520A	Stator, A960E (8 3/4”OD)(9 Bolts To Case)(Aluminum)(3 Rings & Needle Bearing) 2006-Up	1	
267530A	Gear Set, A960E Pump (9 Inner Teeth)(10 Outer Teeth)(Lobe Type)(.391”Thick)(Dimpled)(2 Ears)2006-Up	1	
267545A	Retainer, A960E B2 Clutch Piston (5.155”OD)(3.850”ID)(Tin) 2006-Up	1	
267547A	Retainer, A960E B1 Clutch Piston (4.165”ID)(.865”Tall)(5.567”OD)(Tin) 2006-Up	1	
267548A	Apply Plate, A960E Low-Reverse (1.965”Thick)(4.905”OD)(4.290”ID) 2006-Up	1	
267549A	Spacer, A960E Reverse Clutch (.498”Thick)(5.425”ID)(6 1/2”OD) 2006-Up	1	
267554A	Drum W/Shaft, A960E (10”Tall)(24 Teeth Steels)(4 Rings)(4.670”OD)(2 Balls Under Bushing)2006-Up	1	
267555A	Drum, A960E Direct (4.235”Tall)(6 1/2”OD)(2.650”Bore ID) 2006-Up	1	
267559A	Drum/Piston, A960E Coast Clutch (1.870”Tall)(4.510”OD)(4 Clutches)(24 Teeth Steel)(24 Slots)2006-Up	1	
267560AK	Piston Kit, A960E B2 Clutch (2 Pieces)(Piston & Retainer) 2006-Up	1	
267562AK	Piston Kit, A960E 2nd Brake Clutch (Aluminum) 2006-Up	1	

© Whatever It Takes Transmission Parts. Inc.

267564AK.....Piston Kit, A960E Coast/Forward (Bonded Pistons)(Aluminum Retainer)(4 Pieces) 2006-Up
.....(Does Not Include 559) .....1 .....
267565AK.....Piston Kit, A960E Direct Clutch (Aluminum) 2006-Up.....1 .....
267566AK.....Piston Kit, A960E Reverse Clutch 2006-Up .....1 .....
267567AK.....Piston Kit, A960E Low/Reverse Clutch (Aluminum) 2006-Up .....1 .....
267569AK.....Piston Kit, A960E B1 Clutch (Aluminum) 2006-Up.....1 .....
267571A .....Hub W/Race, A960E Forward Clutch (30 Clutch Teeth)(15 Holes)(2.275"OD) 2006-Up .....1 .....
267575A .....Hub, A960E Direct Clutch (6 3/4"Tall)(36 Clutch Spline)(9 Slots)(5.390"OD) 2006-Up.....1 .....
267576A .....Shell, A960E Reverse Clutch Hub (33 Teeth)(Right Angle)(4.970"Tall)(5.310"OD)(10 Slots)
.....2006-Up .....1 .....
267579A .....Hub, A960E B1 Clutch (40T)(2.885"OD)(3 Round Holes) 2006-Up.....1 .....
267580A .....Planet, A960E Center (4 Steel Gears)(20 Teeth Right Angle Gears)(3.185"OD)(2.520"Thick)
.....2006-Up .....1 .....
267582A .....Planet, A960E Front (6 Gears)(Aluminum)(1 Groove)(2.265"Tall)(4.030"OD) 2006-Up .....1 .....
267584A .....Rear Planet/Output Shaft, A960E (12 15/16"Long)(4 Gears)(20 Teeth)(18 Park Lugs) 2006-Up ...1 .....
267590A .....Ring Gear, A960E Center Planet (16 Lugs)(35 Clutch Teeth)(66 Left Angle Teeth)(1.704"Tall)
.....2006-Up .....1 .....
267592A .....Ring Gear, A960E Front Planet (76 Teeth)(Left Angle)(1.570"Thick) 2006-Up .....1 .....
267594A .....Ring Gear, A960E Rear Planet (66 Left Angle Teeth)(1.450"Tall)(42 Clutch Splines) 2006-Up .....1 .....
267602A .....Hub, A960E Front Planet Ring Gear (66 Outer Teeth)(1.585"ID)(.495"Thick) 2006-Up.....1 .....
267604A .....Hub, A960E Rear Planet Ring Gear (1.905"Tall)(66 Outer Teeth) 2006-Up.....1 .....
267610A .....Sun Gear, A960E Center Planet (26 Teeth)(.922"Thick)(1.430"OD) 2006-Up .....1 .....
267632A .....Support, A960E 2nd Brake (20 Outer Lugs)(20 Inner Lugs)(1.265"Thick) 2006-Up .....1 .....
117638A.....Anti Rattle Spring, A960E B-1/B-2/Low/Reverse Clutch Steels (.012" Thick)(.535" Wide)
.....(4.310"Long) 2006-Up.....1 .....
267640A .....Sprag Assembly, A960E #4 Sprag (Includes: (2)886, (2)650-1, 650 & 661) 2006-Up .....1 .....
267642A .....Sprag Assembly, A960E #2 Sprag (Contains: 285, (2)652-1, 652, 663 & 285) 2006-Up.....1 .....
267644A .....Sprag Assembly, A960E #3 Sprag (Includes (2)887, (2)654-1, 654 & 665) 2006-Up .....1 .....
267648A .....Sprag Assembly, A960E Low/Reverse Sprag (Contains: 284, 669, (2)658-1, 658, 885 & 668)
.....2006-Up .....1 .....
267650-1A.....Cap, A960E Front Sprag (Brass)(2.927"OD)(2.273"ID)(.185"Thick) 2006-Up .....1 .....
267650A .....Sprag, A960E Front (25 Lugs)(Double Cage)(.570"Thick) 2006-Up.....1 .....
267652A .....Sprag, A960E #2 (22 Elements)(.520"Thick W/Caps)(.445"Thick W/O Caps) 2006-Up .....1 .....
267654-1A.....Brass Cap, A960E #3 Sprag (3.535"OD)(2.885"ID) 2006-Up .....2 .....
267654A .....Sprag, A960E #3 (21 Elements)(.445"Thick W/ Brass End Caps) 2006-Up .....1 .....
267658-1A.....Caps, A960E Low-Reverse Sprag (Brass)(3.195"OD)(.137"Thick) 2006-Up.....2 .....
267658A .....Sprag, A960E Low-Reverse (22 Lugs/Elements)(1.035"Wide)(3.150"OD)(W/2 Brass Caps)
.....2006-Up .....1 .....
267661A .....Outer Race, A960E #4 Sprag (30 Outer Splines)(.913"Thick)(2.925"ID) 2006-Up .....1 .....
267663A .....Outer Race, A960E #2 Sprag (36 Clutch Splines)(4 Holes)(2.670"ID)(4.570"OD) 2006-Up.....1 .....
267665A .....Outer Race, A960E #3 Sprag (20 Outer Lugs)(.885"Thick)(3.538"ID) 2006-Up .....1 .....
267668A .....Inner Race, A960E Low-Reverse Sprag (2.445"OD)(1.270"Thick)(42 Inner Splines) 2006-Up.....1 .....
267669A .....Outer Race, A960E Low-Reverse Sprag (17 Lugs)(3.195"ID)(1.330"Thick) 2006-Up.....1 .....
267674A .....Shaft, A960E Intermediate (11 5/8"Long)(26 Teeth)(Left Angle)(1.500"OD) 2006-Up.....1 .....
267698A .....Oil Deflector, A960E Extention Housing (All 2WD)(.245"Thick)(2.134"OD) 2006-Up .....1 .....
267740A .....Valve Body, A960E (w/9 Solenoids)(Cast # 8840)(19 Bolts To Case) 2006-Up .....1 .....

PART #	VALVE BODY COMPONENTS	QTY	REFERENCE #

267741-4A.....Bracket, A960E Temp Sensor To Valve Body 2006-Up.....1 .....

PART #	HARD PARTS (Continued)	QTY	REFERENCE #

267750A .....Bell Housing, A960E (Starter At 3:00)(2 Threaded Bosses At 6:00)(10 Bolts To Case)(5 5/8"Thick)
.....2006-Up .....1 .....
267750B .....Bell Housing, A960E (Starter At 4:00)(2 Threaded Bosses At 7:00)(10 Bolts To Case)(6 3/4"Thick)
.....(2 Bolt Cover At 6:00) 2006-Up .....1 .....
267760A .....Case, A960E (2WD Only)(7 Extention Housing Bolts)(Cast 8840)(20 Pan Bolts)(2 Input Sensors
.....In Driver Side) 2006-Up .....1 .....
267760B .....Case, A960E (2WD/4x4)(6 Extention Housing Bolts/8 For Transfer Case)(Cast 8840)(Input Sensor
.....Driver Side)(20 Pan Bolts) 2006-Up.....1 .....
977961C .....Ball Plunger W/Spring, A960E (In Case Under Valve Body)(Plastic Housing) 2006-Up.....1 .....
267761-4A.....Cover, A960E (2 Bolt)(Plastic)(No Cut Out) 2006-Up .....1 .....
97761C .....Ball Plunger W/Spring, A960E (In Case Under Valve Body)(Plastic Housing).....1 .....
267765A .....Pan, A960E (20 Bolt Holes)(3.232" Deep)(Rear Drain Plug)(Uses Metal Plug) 2006-Up.....1 .....
267765B .....Pan, A960E (20 Bolt)(2.825" Deep)(Rear Drain Plug)(Uses Plastic Filter) 2006-Up .....1 .....
267770A .....Extention Housing, A960E (2WD)(7 Bolt)(10 1/2"Long)(4 Thread Mount Studs)(2 Bolts For
.....Balance Weight) 2006-Up .....1 .....
267770B .....Extention Housing, A960E (2WD)(6 Bolt)(9 7/8"Long)(4 Threaded Mount Holes) 2006-Up .....1 .....
117776AK.....Bolt Set, A960E Bell Housing To Case (10 Pieces) 2006-Up.....1 .....

© Whatever It Takes Transmission Parts. Inc.

PART #	HARD PARTS (Continued)	QTY	REFERENCE #
267777AK	Bolt Set, A960E Pump To Case (9 Pieces)(12mm Hex x 1.850"Long) 2006-Up	1	
117779AK	Bolt Set, A960E Pan To Case (20 Pieces) 2003-Up (10mm Hex x .715"Long)	1	
267779BK	Bolt Set, A960E Pan To Case (20 Pieces)(T30 Torx x .887"Long) 2006-Up	1	
267781AK	Bolt Set, A960E Extention Housing To Case (7 Pieces)(2-14mm x 1.610"Long) (5-14mm x 2.010"Long) 2006-Up	1	
267781BK	Bolt Set, A960E Extention Housing To Case (6 Pieces)(2-14mm x 1.610"Long) (4-14mm x 2.010"Long) 2006-Up	1	
267782AK	Bolt Set, A960E Valve Body To Case (19 Pieces)(2-10mm x 2.184"Long)(2-10mm x 1.980"Long) (4-10mm x 1.627"Long)(11-10mm x 1.200"Long) 2006-Up	1	
117797A	Nut, A960E Holds Manual Lever To Shaft (12mm) 2006-Up	1	
117797-1A	Nut, A960E Holds Neutral Safety Switch To Manual Shaft (22mm) 2006-Up	1	
267846A	Bracket, A960E Cooler Line To Case (4 Holes, 1 Threaded) 2006-Up (L-Shape)	1	
267846B	Bracket, A960E Cooler Line To Case (3 Holes, 1 Threaded & 1 Stud) 2006-Up (2 Big Holes)	1	
267846C	Bracket, A960E On Passenger Side Of Case (Rear)(4 Holes & 2 Studs) 2006-Up(Loop On Top)	1	
267854A	Cushion, A960E Reverse Clutch (8 Teeth)(.055"Thick)(5.490"ID)(Beveled) 2006-Up	1	
267861A	Snap Ring, A960E B2 Clutch (.063"Thick)(5.470"OD) 2006-Up	1	
267864A	Snap Ring, A960E Coast Clutch (4.285"OD)(.250"Wide) 2006-Up (Selective)	1	
267866A	Snap Ring, A960E Holds Ring Gear To Center Planet (3.750"OD)(.056"Thick)(.177"Wide) 2006-Up	1	
267868A	Snap Ring, A960E Holds Ring Gear Center To Ring Gear Front (4.510"OD)(.056"Thick) 2006-Up	1	
267871A	Snap Ring, A960E B1 Clutch Retainer (.056"Thick)(.194"Wide)(6 1/8"OD) 2006-Up	1	
267872A	Snap Ring, A960E 2nd Brake (Top)(.119"Thick)(6 3/8"OD)(.240"Wide) 2006-Up	1	
267874A	Snap Ring, A960E 2nd Brake Retainer To Support (.056"Thick)(6 1/8"OD)(.197"Wide) 2006-Up	1	
267876A	Snap Ring, A960E Forward Clutch (4.405"OD)(.250"Wide) 2006-Up (Selective)	1	
267877A	Snap Ring, A960E Coast/Forward Piston Kit (.045"Thick)(1.500"OD) 2006-Up	1	
267878A	Snap Ring, A960E Direct (6 3/8"OD)(.062"Thick)(.255"Wide) 2006-Up	2	
117879A	Snap RIng, A960E Holds Direct Clutch Retainer In (.040"Thick)(2.805"OD) 2006-Up	1	
267883A	Snap Ring, A960E Support To Case (.117"Thick)(6 3/4"OD)(2 Eyelets)(Beveled) 2006-Up	1	
267884A	Snap Ring, A960E Low-Reverse Piston Kit (2.388"OD)(.033"Thick) 2006-Up	1	
267885A	Snap Ring, A960E Low-Reverse Sprag To Outer Race (3.440"OD)(.040"Thk) 2006-Up	1	
267886A	Snap Ring, A960E Sprag End Caps (3.085"OD)(.030"Thick) 2006-Up	2	
267887A	Snap Ring, A960E Holds #3 Sprag In Outer Race (.039"Thick) 2006-Up	2	
267889A	Snap Ring, A960E Rear Planet To Rear Ring Gear (.056"Thick)(3.990"OD)(.177"Wide) 2006-Up	1	
267890A	Snap Ring, A960E Low-Reverse Sprag Assembly To Case (5.695"OD)(.118"Thick)(Beveled) (.218"Wide) 2006-Up	1	
267891A	Snap Ring, A960E Reverse Clutch (.063"Thick)(.252"Wide)(6 13/16"OD) 2006-Up	1	
117893A	Snap Ring, A960E Holds Reverse Clutch Piston & Housing To Direct Drum (.048"Thick) (3.365"OD) 2006-Up	1	
267897A	Snap Ring, A960E Ball Bearing To Extention Housing (Some 2WD)(6 Bolt Housing)(2.575"OD) (.059"Thick)(Hooked Ends) 2006-Up	1	
267925A	Accumulator Assembly, A960E (Aluminum) (Piston-.983"OD x 1.125"Long) (Spring-.670"OD x 1.792"Long) 2006-Up	1	
267935A	Accumulator Assembly, A960E (Plastic) (Piston-.715"ID x 2.070"Long) (Pink) (Spring-.635"OD x 2.560"Long)(2 O-Rings) 2006-Up	1	
267945A	Accumulator Assembly, A960E (Plastic)(Piston-.875"ID x 2.160"Long) (White) (Spring-.790""OD x 2.990"Long)(2 O-Rings) (Spring-.545"OD x 1.735"Long) 2006-Up	1	
267950A	Accumulator Assembly, A960E (Plastic)(Piston-.845"ID x 2.595"Long) (Red) (Spring-.765"OD x 2.520"Long)(2 O-Rings) 2006-Up	1	
267957A	Housing, A960E Reverse Clutch Piston (28 Pockets)(5 7/8"OD)(3.335"ID) 2006-Up	1	
267560AK	Piston Kit, A960E B2 Clutch (2 Pieces)(Piston & Retainer) 2006-Up	1	
267960A	Piston, A960E B2 Clutch (5.039"OD)(4.015"ID)(Aluminum)	1	
267962A	Piston, A960E 2nd Brake (24 Pockets)(1.335"Tall) (5.685"OD)(Aluminum) 2006-Up	1	
267964A	Piston, A960E Coast Clutch (1.210"Thick)(4.325"OD At Lugs)(1.425""ID)	1	
267965A	Piston, A960E Direct Clutch (30 Pockets)(Aluminum)(Cast # 313015) 2006-Up	1	
267966A	Piston, A960E Reverse Clutch (6 3/4"OD)(4.124"ID)(4.335"Tall)(24 Teeth Steel)(24 Slots) 2006-Up	1	
267967-1A	Piston, A960E Low-Reverse Balance (4.340"OD)(2.710"OD)(.663"Thick)(Aluminum) 2006-Up	1	
267967-2A	Piston, A960E Low-Reverse Balance (3.975"OD)(2.258"ID)(.388"Tall) 2006-Up	1	
267967A	Piston, A960E Low-Reverse (.950"Tall)(20 Spring Pockets)(Aluminum)(3.975"OD) 2006-Up	1	
267969A	Piston, A960E B1 Clutch (5.445"OD)(4.340"ID)(1.210"Thick)(16 Spring Guides)(Aluminum) 2006-Up	1	
267970A	Retainer, A960E B2 Clutch (W/12 Springs)(4.095"ID)(1.005"Tall) 2006-Up	1	
267972A	Retainer, A960E 2nd Brake (24 Spring)(5 3/4"OD)(.675"Thick) 2006-Up	1	
267974A	Spring W/Retainer, A960E Coast/Forward (14 Springs)(1.015"Thick)(2.855"OD) 2006-Up	1	
267975A	Spring W/Retainer, A960E (30 Springs)(4.715"OD)(.790"Thock)(3.745"ID) 2006-Up	1	

© Whatever It Takes Transmission Parts. Inc.

267976A ..... Spring W/Retainer, A960E Reverse Clutch Piston (28 Springs)(5.240”OD)(4.320”ID)(.835”Thick) 2006-Up 1
267977A ..... Retainer, A960E Low-Reverse (W/20 Springs)(3.645”OD)(.940”Thick)(2.205”ID) 2006-Up 1
267979A ..... Retainer, A960E B1 Clutch (16 Springs)(5.810”OD)(.675”/.735”Thick) 2006-Up 1
267984A ..... Retainer, A960E Coast/Forward Spring (14 Spring Pockets)(1.580”Thick)(3.820”OD) 2006-Up 1
267985A ..... Retainer, A960E Direct (Aluminum)(4.815”OD)(2.665”ID) 2006-Up 1
117991-2A ..... Spring, A960E Detent (5.125” Long)(.643”At End) 2003-Up 1
267991-3A ..... Rooster Comb, A960E (Cast # B8)(.475”ID)(4 Detents)(One Long Detent)(5 Total Detents) (.238”Link Hole) 2006-Up 1
117991-4B ..... Manual Rod, A960E (10 9/16” Long)(8 7/8””From Threaded End To Hole)(W/Flats On 1 End) 2006-Up 1
287991-5A ..... Roll Pin, A960E Holds Rooster Comb Locked To The Linkage Rod (.775”Long)(.160”OD) 2006-Up 1
267991-7A ..... Manual Link, A960E Rooster Comb To Manual Valve (.275”OD)(1 Bend)(5.280”Long) 2006-Up 1
267991-8A ..... Sleeve, A960E Holds Roll Pin In Manual Shaft (.830”OD)(Use 67991S)(.850”Long) 2006-Up 1
267991-10A ..... C-Clip, A960E Manuel Link To Manual Valve (.360”OD)(.022”Thick) 2006-Up 1
267992A ..... Manual Lever, A960E (5”Long Off Set)(Cast # FE92)(.982”Wide) 2006-Up 1
267994A ..... Park Rod, A960E (10 7/8”Long)(.740”OD Ball) 2006-Up 1
117995-3A ..... Spring, A960E Park Pawl Return 1
117995-4A ..... Pivot Pin, A960E 1
267995-1A ..... Park Pawl, A960E (4.870”Long)(.384”Thick) 2006-Up 1
267995-6A ..... Bracker, A960E Acuator (3 Bolts)(2.530”Long)(3/8” From End To Ball Ramp) 2006-Up 1
267995A ..... Park Pawl Assembly, A960E (4 Pieces) 2006-Up (Includes: Bracket, Pin, Park Pawl & Spring) 1
267996AK ..... Bolt Set, A960E Cooler Line For Banjo Fittings (19mm Head x 1.355”Long)(2 Pieces) 2006-Up 1

© Whatever It Takes Transmission Parts. Inc.

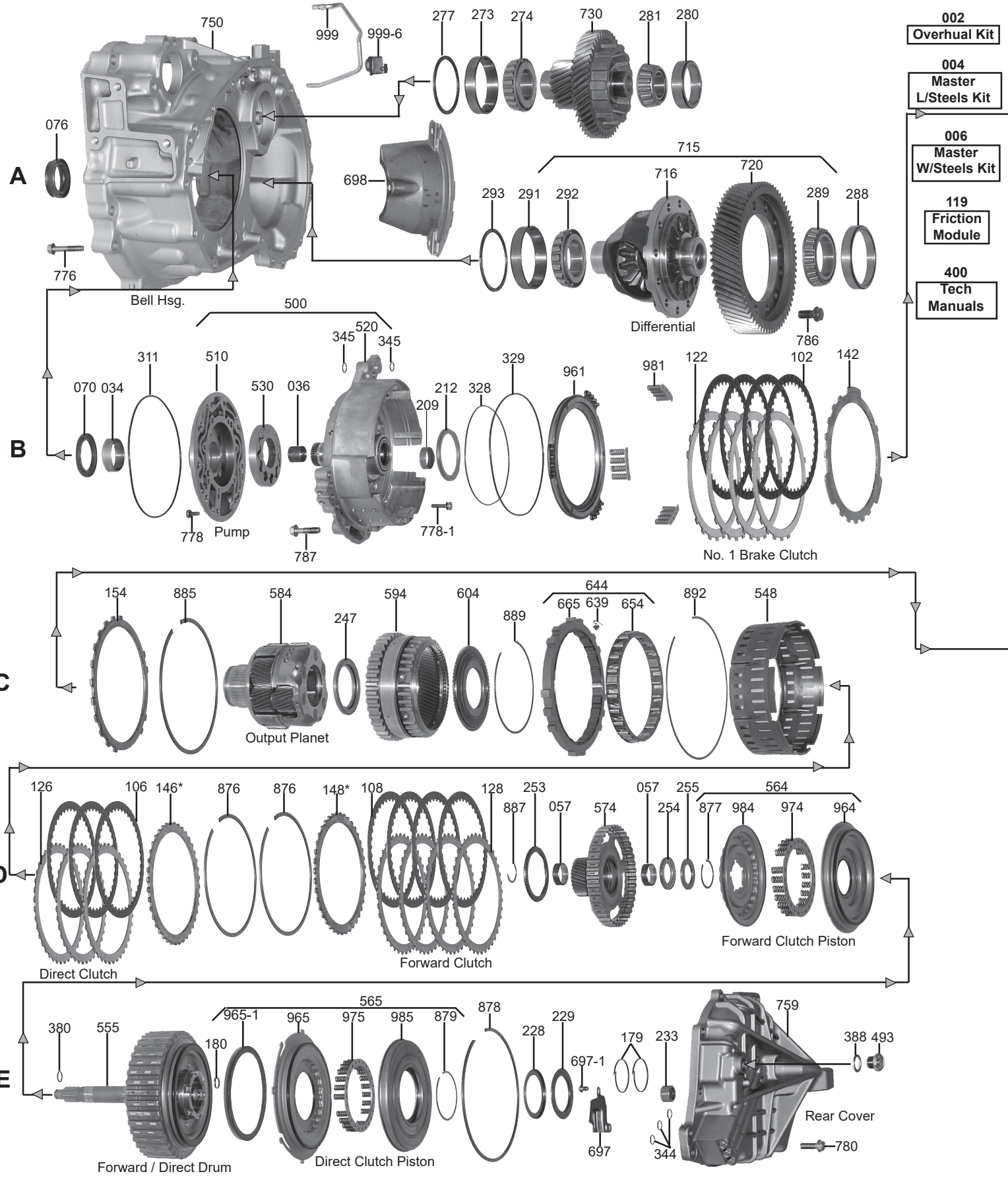

002 Overhual Kit

004 Master L/Steels Kit

006 Master W/Steels Kit

119 Friction Module

400 Tech Manuals

TOYOTA

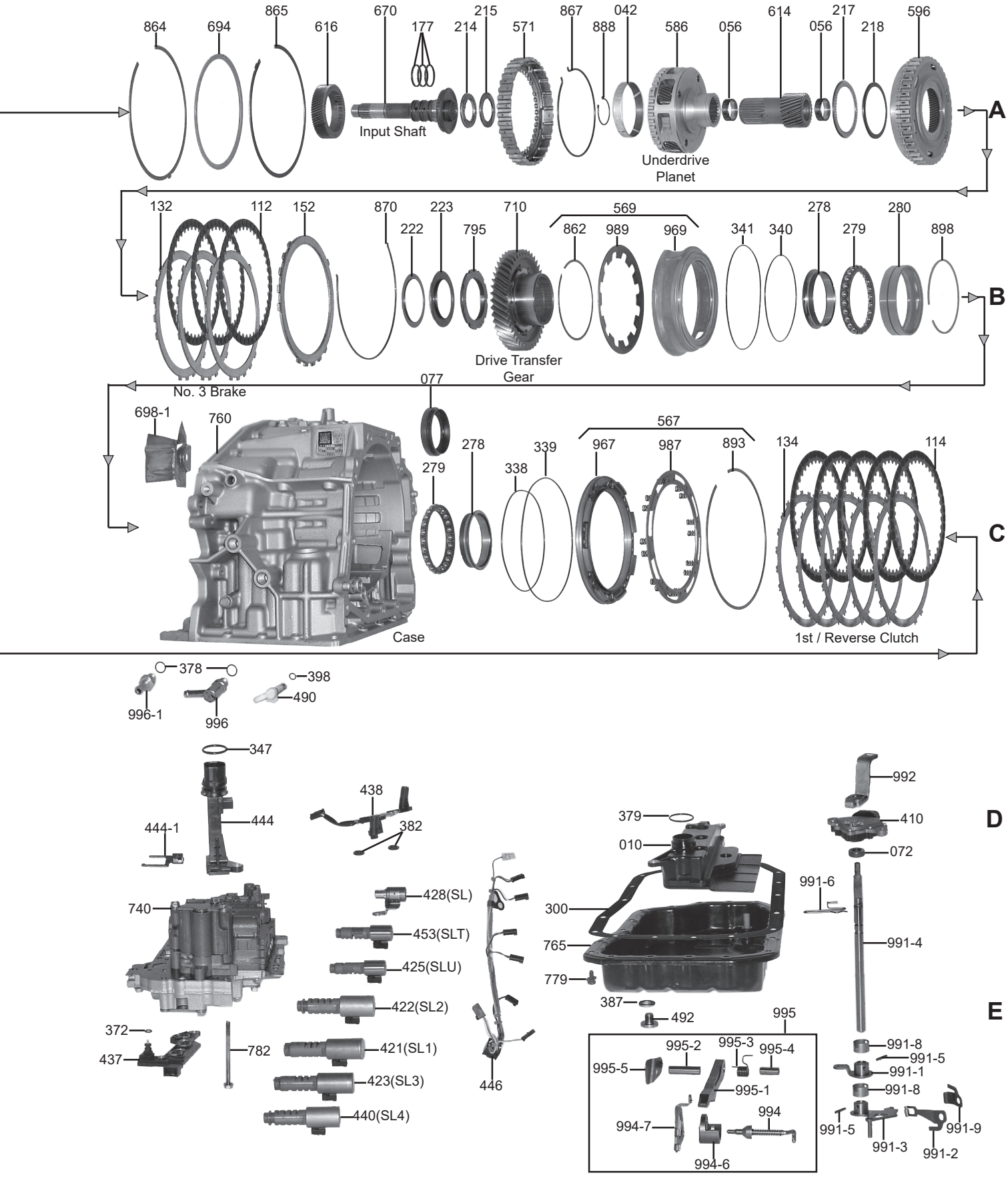

TOYOTA

1-800-940-0197

© Whatever It Takes Transmission Parts. Inc.

PART #	OVERHAUL KITS	QTY	REFERENCE #
277002AF	Overhaul Kit, U660E 2007-Up (For Bonded Pistons Sell A277960AK)	1	
277002BF	Overhaul Kit, U760E 2008-Up (For Bonded Pistons Sell A277960BK)	1	

PART #	MASTER L/STEELS KIT	QTY	REFERENCE #
277004A	Master L/Steels Kit, U660E 2007-Up (For Bonded Pistons Sell A277960AK)	1	
277004AHT	Master L/Steels Kit, U660E 2007-Up (HT Frictions)(For Bonded Pistons Sell A277960AK)	1	
277004BF	Master L/Steels Kit, U760E 2008-Up (For Bonded Pistons Sell A277960BK)	1	

PART #	MASTER W/STEELS KIT	QTY	REFERENCE #
277006A	Master W/Steels Kit, U660E 2007-Up (For Bonded Pistons Sell A277960AK)	1	
277006BF	Master W/Steels Kit, U760E 2008-Up (For Bonded Pistons Sell A277960BK)	1	

PART #	FILTERS	QTY	REFERENCE #
277010A	Filter, U660E (2 Bolt)(Plastic)(Round Pick-Up)(2.340”Thick) 2007-Up	1	
277010B	Filter, U760E (2 Bolt)(Plastic)(3/4 Square Pick-Up)(2.045” Thick) 2008-Up	1	

PART #	BUSHINGS	QTY	REFERENCE #
277030A	Bushing Kit, U660E/U760E 2007-Up	1	
277034A	Bushing, U660E Pump Body (Front) (.500"Thick)(1.820"OD)(1.695"ID) 2007-Up (Early Style)	1	
277034AB	Bushing, U660E/U760E Pump Body (Front) (.500 Thick)(1.858”OD)(1.695”ID)(Late Style)	1	
277036A	Bushing, U660E/U760E Stator (Front) (.680"Thick)(1.013"OD)(.880"ID) 2007-Up	1	
277042A	Bushing, U660E/U760E Underdrive Planet (Front)(.460"Thick)(3.300"OD)(3.105"ID) (With 4 Holes) 2007-Up	1	
277056A	Bushing, U660E/U760E Sun Gear # 614 (Front & Rear)(.430"Thick)(1.105"OD)(1.000"ID) 2007-Up	2	
277057A	Bushing, U660E/U760E Output Rear Sun Gear Hub (1.105"OD)(1.010"ID)(Front & Rear) 2007-Up	2	

PART #	METAL CLAD SEALS	QTY	REFERENCE #
277070A	Seal, U660E/U760E Pump (Front) (.230"Thick)(2.445"OD)(1.650"ID) 2007-Up	1	
277072A	Seal, U660E/U760E Linkage (.275"Thick)(.870"OD)(.460"ID) 2007-Up	1	
87076A	Seal, U660E/U760E Axle (Bell Housing Side)(2.210"OD) 2007-Up	1	
167077DA	Seal, U660E Axle (Case Side) (2.680”OD) 2007-Up	1	

PART #	FRICTIONS	QTY	REFERENCE #
277102A	Friction, U660E/U760E No. 1 Brake Clutch (.074")(40 Teeth)(7"OD) 2007-Up (Takes 4)(Also Fits U660E/U760E No. 3 Brake Clutch # 112 2007-Up)(Takes 3)	3-7	
277106A	Friction, U660E/U760E Direct Clutch (.070") (40 Teeth, V Notched)(6 9/16"OD)(Has 48 Grooves In Friction Lining) 2007-Up (Takes 3) (Also Fits U660E/U760E Forward Clutch # 108)(U660E Takes 4)(U760E Takes 3)	3-7	
277108A	Use 277106A	4	
277112A	Use 277102A	3	
277114A	Friction, U660E 1st/Reverse Clutch (.062") (40 Teeth) (7 1/4"OD) 2007-Up	5	
277119A	Friction Module, U660E 2007-Up	1	
277119B	Friction Module, U760E 2008-Up	1	

PART #	STEELS	QTY	REFERENCE #
277122A	Steel, U660E No. 1 Brake Clutch (.072")(11 Teeth)(6.045"ID) 2007-Up	4	
277122B	Steel, U760E No. 1 Brake Clutch (.095”)(11 Teeth)(6.045”ID) 2008-Up	3	
277126A	Steel, U660E/U760E Direct Clutch (.085") (40 Teeth V Notched)(5.670"ID) 2007-Up (U660E Takes 3)(U760E Takes 2)	2-3	
277128A	Steel, U660E/U760E Forward Clutch (.070")(40 Teeth Not Notched)(5.670"ID) 2007-Up (U660E Takes 4)(U760E Takes 3)	3-4	
277132A	Steel, U660E No. 3 Brake Clutch (.118")(11 Teeth)(6.050"ID) 2007-Up	3	
277134A	Steel, U660E/U760E 1st/Reverse Clutch (.062")(16 Teeth)(6 3/8"ID) 2007-Up	5	
277139A	Steel Module, U660E 2007-Up	1	
277139B	Steel Module, U760E 2008-Up	1	

PART #	PRESSURE PLATES	QTY	REFERENCE #
277142AA	Pressure Plate, U660E No. 1 Brake Clutch (.118")(14 Teeth)(6.050"ID)(Stamped# 30) 2007-Up	1	35676-73010

TOYOTA

© Whatever It Takes Transmission Parts. Inc.

277142AB.....Pressure Plate, U660E No. 1 Brake Clutch (.122")(14 Teeth)(6.050"ID)(Stamped #31) 2007-Up..1 35676-73020
277142AC.....Pressure Plate, U660E No. 1 Brake Clutch (.126")(14 Teeth)(6.050"ID)(Stamped #32) 2007-Up..1 35676-73030
277142AD.....Pressure Plate, U660E No. 1 Brake Clutch (.130")(14 Teeth)(6.050"ID)(Stamped #33) 2007-Up..1 35676-73040
277142AE.....Pressure Plate, U660E No. 1 Brake Clutch (.134")(14 Teeth)(6.050"ID)(Stamped #34) 2007-Up..1 35676-73050
277142AF.....Pressure Plate, U660E No. 1 Brake Clutch (.138")(14 Teeth)(6.050"ID)(Stamped #35) 2007-Up..1 35676-73060
277142BA.....Pressure Plate, U760E No. 1 Brake Clutch (.118")(16 Teeth)(6.050"ID)(Stamped #30) 2008-Up..1 35676-33020
277142BB.....Pressure Plate, U760E No. 1 Brake Clutch (.122")(16 Teeth)(6.050"ID)(Stamped #31) 2008-Up..1 35676-33030
277142BC.....Pressure Plate, U760E No. 1 Brake Clutch (.126")(16 Teeth)(6.050"ID)(Stamped #32) 2008-Up..1 35676-33040
277142BD.....Pressure Plate, U760E No. 1 Brake Clutch (.130")(16 Teeth)(6.050"ID)(Stamped #33) 2008-Up..1 35676-33050
277142BE.....Pressure Plate, U760E No. 1 Brake Clutch (.134")(16 Teeth)(6.050"ID)(Stamped #34) 2008-Up..1 35676-33060
277142BF.....Pressure Plate, U760E No. 1 Brake Clutch (.138")(16 Teeth)(6.050"ID)(Stamped #35) 2008-Up..1 35676-33070
277146AA.....Pressure Plate, U660E/U760E Direct Clutch (.118")(40 Teeth)(5.670"ID)(Cast #30) 2007-Up
.....(Also Fits U660E/U760E Forward Clutch # 148 2007-Up).....1-2.....35635-73010
277146AB.....Pressure Plate, U660E/U760E Direct Clutch (.122")(40 Teeth)(5.670"ID)(Cast #31) 2007-Up
.....(Also Fits U660E/U760E Forward Clutch # 148 2007-Up).....1-2.....35635-73020
277146AC.....Pressure Plate, U660E/U760E Direct Clutch (.126")(40 Teeth)(5.670"ID)(Cast #32) 2007-Up
.....(Also Fits U660E/U760E Forward Clutch # 148 2007-Up).....1-2.....35635-73030
277146AD.....Pressure Plate, U660E/U760E Direct Clutch (.130")(40 Teeth)(5.670"ID)(Cast #33) 2007-Up
.....(Also Fits U660E/U760E Forward Clutch # 148 2007-Up).....1-2.....35635-73040
277146AE.....Pressure Plate, U660E/U760E Direct Clutch (.134")(40 Teeth)(5.670"ID)(Cast #34) 2007-Up
.....(Also Fits U660E/U760E Forward Clutch # 148 2007-Up).....1-2.....35635-73050
277146AF.....Pressure Plate, U660E/U760E Direct Clutch (.138")(40 Teeth)(5.670"ID)(Cast #35) 2007-Up
.....(Also Fits U660E/U760E Forward Clutch # 148 2007-Up).....1-2.....35635-73060
277148A.....Use U277146AA through U277146AF .....1 .....
277152AA.....Pressure Plate, U660E/U760E No. 3 Brake Clutch (.150")(11 Teeth)(6.050"ID)(Cast # 38)
.....2007-Up 1 35679-73020
277152AB.....Pressure Plate, U660E/U760E No. 3 Brake Clutch (.154")(11 Teeth)(6.050"ID)(Cast # 39)
.....2007-Up 1 35679-73030
277152AC.....Pressure Plate, U660E/U760E No. 3 Brake Clutch (.158")(11 Teeth)(6.050"ID)(Cast # 40)
.....2007-Up 1 35679-73040
277152AD.....Pressure Plate, U660E/U760E No. 3 Brake Clutch (.162")(11 Teeth)(6.050"ID)(Cast # 41)
.....2007-Up 1 35679-73050
277152AE.....Pressure Plate, U660E/U760E No. 3 Brake Clutch (.166")(11 Teeth)(6.050"ID)(Cast # 42)
.....2007-Up 1 35679-73060
277152AF.....Pressure Plate, U660E/U760E No. 3 Brake Clutch (.170")(11 Teeth)(6.050"ID)(Cast # 43)
.....2007-Up 1 35679-73070
277154AA.....Pressure Plate, U660E/U760E 1st/Reverse Clutch (.158")(16 Teeth)(6 3/8"ID)(Cast #40)
.....2007-Up 1 35678-73010
277154AB.....Pressure Plate, U660E/U760E 1st/Reverse Clutch (.162")(16 Teeth)(6 3/8"ID)(Cast #41)
.....2007-Up 1 35678-73020
277154AC.....Pressure Plate, U660E/U760E 1st/Reverse Clutch (.166")(16 Teeth)(6 3/8"ID)(Cast #42)
.....2007-Up 1 35678-73030
277154AD.....Pressure Plate, U660E/U760E 1st/Reverse Clutch (.170")(16 Teeth)(6 3/8"ID)(Cast #43)
.....2007-Up 1 35678-73040
277154AE.....Pressure Plate, U660E/U760E 1st/Reverse Clutch (.174")(16 Teeth)(6 3/8"ID)(Cast #44)
.....2007-Up 1 35678-73050

PART #	VALVE BODY KITS	QTY	REFERENCE #

T277165A.....Shift Kit, U660E 2007-Up (Transgo).....3 .....
T277165B.....Shift Kit, U760E 2008-Up (Transgo).....3 .....

PART #	SEALING RINGS	QTY	REFERENCE #

277177AT.....Ring, U660E/U760E Input Shaft (.089"Thick)(1.195"OD)(Teflon) 2007-Up .....3 .....
277179AT.....Ring, U660E/U760E Forward/Direct Clutch Drum To Rear Cover (.090"Thick)(1.900"OD)(Teflon)
.....2007-Up .....2 .....
277180AT.....Ring, U660E/U760E Forward/Direct Clutch Drum (Rear)(.092"Thick)(.630"OD)(Teflon) 2007-Up..1 .....

PART #	WASHERS & BEARINGS	QTY	REFERENCE #

277209A.....Caged Needle Bearing, U660E Stator (Rear)(.400"Thick)(1.525"OD) 2007-Up.....1 .....
277209B.....Caged Needle Bearing, U760E Stator (Rear)(Cast # NSK DB503310W) 2008-Up.....1 .....
277212A.....Bearing W/Races, U660E/U760E Stator To Sun Gear (.180"Thick)(2.955"OD)(2.275"ID)
.....2007-Up .....1 .....
277214A.....Bearing W/Race, U660E/U760E Input Shaft To Underdrive Planet (.168"Thick)(1.905"OD)
.....(1.153"ID) 2007-Up .....1 .....
277215A.....Race, U660E/U760E Input Shaft To Underdrive Planet (.078"Thick)(1.893"OD)(1.215"ID)
.....2007-Up .....1 .....

© Whatever It Takes Transmission Parts. Inc.

PART #	WASHERS & BEARINGS (Continued)	QTY	REFERENCE #
277217A	Bearing W/Race, U660E Underdrive Planet To Ring Gear (.129"Thick)(3.230"OD)(2.470"ID) 2007-Up	1	
277217B	Bearing W/Races, U760E Underdrive Planet To Ring Gear (.163" Thick)(3.230"OD)(2.470"ID) 2008-Up	1	
277218A	Race, U660E Underdrive Planet To Ring Gear (.032"Thick)(3.150"OD)(2.600"ID)(Cupped) 2007-Up	1	
277222A	Race, U660E Underdrive Planet Ring Gear To Drive Transfer Gear Nut (.031"Thick)(3.020"OD) (2.340"ID) 2007-Up	1	
277222B	Race, U760E Underdrive Planet Ring Gear To Drive Transfer Gear Nut (.130"Thick)(3.100"OD) (2.115"ID) 2008-Up	1	
277223A	Bearing W/Race, U660E Underdrive Planet Ring Gear To DriveTransfer Gear Nut (.120"Thick) (3.100"OD)(2.095"ID) 2007-Up	1	
277223B	Bearing W/Race, U760E Underdrive Palnet Ting Gear To Drive Transfer Gear Nut (.130" Thick) (3.100"OD)(2.115"ID) 2008-Up	1	
277228A	Race, U660E/U760E Forward/Direct Clutch Drum To Rear Cover (.057"Thick)(2.763"OD) (2.060"ID)(Cupped) 2007-Up	1	
277229A	Bearing W/Race, U660E/U760E Forward/Direct Clutch Drum To Rear Cover (.150"Thick) (2.825"OD)(1.930"ID) 2007-Up	1	
277230A	Caged Needle Bearing, U660E/U760E In Rear Cover (.565"Wide)(.945"OD) (Cast # NSK DB501810) 2007-Up	1	
277247A	Bearing W/Races, U660E Output Planet To Rear Sun Gear Hub (.209"Thick)(3.175"OD) (2.210"ID)(Lip Measures 2.300"OD)(Used W/ 277584A 2007-Up	1	
277247B	Bearing W/Races, U760E Output Planet To Rear Sun Gear Hub (.209"Thick)(3.175"OD)(2.210"ID) (Lip Measures 2.275"OD) (Used W/277584B) 2007-Up	1	
277253A	Bearing W/Races, U660E/U760E Output Planet Ring Gear Hub To Rear Sun Gear Hub (.160"Thick)(3.105"OD)(2.415"ID) 2007-Up	1	
277254A	Bearing W/Race, U660E/U760E Sun Gear Hub To Forward/Direct Drum (.188"Thick)(1.848"OD) (1.105"ID) 2007-Up	1	
277255A	Race, U660E/U760E Sun Gear Hub To Forward/Direct Drum (.118"Thick)(1.725"OD)(1.035"ID) 2007-Up	1	
277273A	Cup Race, U660E Pinion Gear To Bell Housing (.665"Thick)(3.230"OD)(2.765"ID) (Cast # KOYO STA4282) 2007-Up	1	
277273B	Cup Race, U760E Pinion Gear To Bell Housing (.645"Thick)(2.835"OD)(2.375"ID) (Cast # KOYO ST3672) 2008-Up	1	
277274A	Cone Bearing, U660E Pinion Gear To Bell Housing (20 Rollers)(1.653"ID) (Cast # KOYO STA4282) 2007-Up	1	
277274B	Cone Bearing, U760E Pinion Gear To Bell Housing (18 Rollers)(1.260"ID) (Cast # KOYO ST3264) 2008-Up	1	
277277A	Shim, U660E Pinion Gear To Bell Housing (Selective)(3.210"OD)(2.810"ID) 2007-Up	1	
277277B	Shim, U760E Pinion Gear To Bell Housing (Selective)(2.815"OD)(2.420"ID) 2008-Up	1	
277278A	Inner Race, U660E/U760E Drive Transfer Gear To Case Bearing #279 (.590"Thick)(3.320"OD) (2.830"ID)(Cast # HTF 2E) 2007-Up	2	
277279A	Cone Ball Bearing, U660E/U760E Drive Transfer Gear To Case (24 Ball With Plastic Cage) (.465"Thick)(4.135"ID) 2007-Up	2	
277280A	Cup Race, U660E/U760E Pinion To Case (.685"Thick)(2.675"OD)(2.175"ID) (Cast # KOYO STF3568) 02007-Up	1	
277281A	Cone Bearing, U660E Pinion To Case (16 Rollers)(1.378"ID)(Cast # KOYO STF3568) 2007-Up	1	
277281B	Cone Bearing, U760E Pinion To Case (18 Rollers)(1.378"ID)(Cast # KOYO STA3572) 2008-Up	1	
277288A	Cup Race, U660E/U760E Differential To Case (.605"Thick)(3.543"OD)(3.058"ID) (Cast # KOYO ST5590A) 2007-Up	1	
277289A	Cone Bearing, U660E Differential To Case (25 Rollers)(2.165"ID)(Cast # KOYO ST5590A) 2007-Up	1	
277289B	Cone Bearing, U760E Differential To Case (36 Rollers)(2.165"ID)(Cast # Nachi 55KB833LT S266) 2008-Up	1	
277291A	Cup Race, U660E Differential To Bell Housing (.665"Thick)(3.543"OD)(2.975"ID) (Cast # KOYO 30210J) 2007-Up	1	
277291B	Cup Race, U760E Differential To Bell Housing (.610"Thick)(3.150"OD)(2.690"ID) (Cast # Nachi E 32010J CLK) 2008-Up	1	
277292A	Cone Bearing, U660E Differential To Bell Housing (19 Rollers)(1.968"ID) (Cast # KOYO 30210JR-1) 2007-Up	1	
277292B	Cone Bearing, U760E Differential To Bell Housing (25 Rollers)(1.968"ID)(Cast # Nachi Japan JA2) 2008-Up	1	
277293A	Shim, U660E Differential Cup Race To Bell Housing (Selective)(3.525"OD)(3.125"ID) 2007-Up	1	
277293B	Shim, U760E Differential Cup Race To Bell Housing (Selective)(3.135"OD)(2.745"ID) 2008-Up	1	

PART #	GASKETS & RUBBER COMPONENTS	QTY	REFERENCE #
277300A	Gasket, U660E Bottom Pan (18 Bolt) 2007-Up	1	

TOYOTA

© Whatever It Takes Transmission Parts. Inc.

277300B ..... Gasket, U760E Bottom Pan (19 Bolt) 2008-Up ..... 1 .....
277311A ..... O-Ring, U660E/U760E Pump Body (6 3/4"OD) 2007-Up ..... 1 .....
277344A ..... O-Ring, U660E/U760E Case To Rear Cover (.069"Thick)(.550"OD) 2007-Up ..... 3 .....
277347A ..... O-Ring, U660E/U760E Case Connector (.136"Thick)(1.400"OD) 2007-Up ..... 1 .....
277372A ..... O-Ring, U660E/U760E Temperature Sensor To Valve Body (.075"Thick)(.395"OD) 2007-Up ..... 1 .....
277379A ..... O-Ring, U660E/U760E Filter (.101"Thick)(1 1/16"OD) 2007-Up ..... 1 .....
277380A ..... O-Ring, U660E/U760E Forward/Direct Clutch Drum Shaft (Front)(.086"Thick)(.650"OD) 2007-Up 1 .....
277382A ..... Lathe Cut Seal, U660E/U760E Valve Body To Case (.145"Thick)(.610"OD)(With 6 OD Notches)
..... 2007-Up ..... 2 .....
277388A ..... Washer/Seal, U660E/U760E Fill Plug To Rear Cover (.960"OD)(.705"ID) 2007-Up ..... 1 .....

PART #	TECHNICAL MANUALS	QTY	REFERENCE #

277400A ..... Tech Manual, U660E 2007-Up Diagnostic (ATSG) ..... 1 .....
277401A ..... CD Tech Manual, U660E 2007-Up (ATSG) ..... 1 .....

PART #	ELECTRICAL COMPONENTS	QTY	REFERENCE #

277410A ..... Neutral Safety Switch, U660E/U760E (7 Pin & 2 Blade Connector)(Cast # 84540-83010-AV2351)
..... 2007-Up ..... 1 .....
277421A ..... Solenoid, U660E/U760E Shift 1 (SL1) (2 Prong, Brown Connector) 2007-Up (Also Fits U660E
..... Shift 3 (SL3) # 423 2007-Up) ..... 1-2 .....
277422A ..... Solenoid, U660E/U760E Shift 2 (SL2) (2 Prong, Black Connector) 2007-Up (Also Fits U660E
..... Shift 4 (SL4) # 440 2007-Up) ..... 1-2 .....
277423A ..... Use 277421A. ..... 1 .....
277425A ..... Solenoid, U660E/U760E Lock-Up (SLU) (2 Prong, Black Connector) 2007-Up ..... 1 .....
277428A ..... Solenoid, U660E/U760E Line Pressure Control (SL)(1 Prong, BlueConnector) 2007-Up ..... 1 .....
277437A ..... Temperature Sensor Assembly, U660E (4 Bolt, W/3 O-Rings) 2007-Up ..... 1 .....
277438A ..... Speed Sensor Assembly, U660 (2 Sensors On A 2 Bolt Bracket With 4 Wire Connector)
..... (The Sensor On The End Of Metal Bracket Is 1.053” Long) 2007-Up ..... 1 .....
277440A ..... Use 277422A. ..... 1 .....
277444-1A ..... Bracket, U660E/U760E Case Connector Extension To Valve Body (1 Bolt) 2007-Up ..... 1 .....
277444A ..... Case Connector Extension, U660E/U760E (22 Blades On Top)(18 Blades On Bottom)(4 Blades
..... On Side) 2007-Up ..... 1 .....
277446A ..... Wire Harness, U660E Internal (18 Prong Connector, With 6 Two Wire Connectors, 1 One Wire
..... Connector, & 1 Four Wire Connector) 2007-Up ..... 1 .....
277446B ..... Wire Harness, U760E Internal (15 Prong Connector, W/6 Two Wire Connectors, W/1 One
..... Wire Connector & W/1 Two Wire Temperature Sensor) 2008-Up ..... 1 .....
277453A ..... Solenoid, U660E /U760E (SLT)(2 Prong, Black Connector) 2007-Up ..... 1 .....

PART #	MISCELLANEOUS COMPONENTS	QTY	REFERENCE #

277490A ..... Vent, U660E/U760E (Plastic, Elbow) (1.970"Long) 2007-Up ..... 1 .....
277493A ..... Fill Plug, U660E/U760E (24mm Hex Head)(.665" Long) 2007-Up ..... 1 .....

PART #	HARDPARTS	QTY	REFERENCE #

277500A ..... Pump, U660E (Cast Iron Body, Aluminum Stator)(Cast # J6A10530 On Stator) 2007-Up ..... 1 .....
277500B ..... Pump, U760E (Cast Iron Body, Aluminum Stator)(Cast # 0G16823 On Stator) 2008-Up ..... 1 .....
277510A ..... Pump Body W/Gears, U660E (Cast Iron)(10 Teeth Inner, 11 Teeth Outer Pump Gears)
..... (1.820”ID Bushing Pocket) 2007-Up (Early Style) ..... 1 .....
277510AB ..... Pump Body W/Gears, U660E/U760E (Cast Iron)(10 Teeth Inner, 11 Teeth Outer Pump Gears)
..... (1.858”ID Bushing Pocket) 2007-Up (Late Style) ..... 1 .....
277520A ..... Stator, U660E (Aluminum)(4 Clutch)(With 18 Small Holes In Wall) 2007-Up ..... 1 .....
277520B ..... Stator, U760E (Aluminum)(3 Clutch)(With 16 Holes In Wall & One Of Them
..... Is 1 1/8”ID) 2008-Up ..... 1 .....
277548A ..... Apply Sleeve, U660E Direct Clutch Piston (2.655"Thick)(W/8 Notches)(Snap Ring # 878 Holds
..... This To The Direct Clutch Piston) 2007-Up ..... 1 .....
277548B ..... Apply Sleeve, U760E Direct Clutch Piston (2.545” Thick)(No Notches)(Snap Ring #878 Holds
..... This To The Direct Clutch Piston) 2007-Up ..... 1 .....
277555A ..... Drum, U660E Forward/Direct Clutch W/Shaft (9 1/4"Long)(4 Forward Clutch & 3 Direct Clutch)
..... 2007-Up ..... 1 .....
277555B ..... Drum, U760E Forward/Direct Clutch W/Shaft (9 1/4” Long)(3 Forward Clutch & 2 Direct Clutch)
..... 2008-Up ..... 1 .....
277564A ..... Piston Kit, U660E Forward Clutch (Bonded Piston & Retainer)(4 Pieces) 2007-Up ..... 1 .....
277564B ..... Piston Kit, U760E Forward Clutch (Bonded Piston & Retainer)(4 Pieces) 2008-Up ..... 1 .....
277565A ..... Piston Kit, U660E Direct Clutch (Bonded Piston W/Housing)(4 Pieces) 2007-Up ..... 1 .....
277567A ..... Piston Kit, U660E/U760E 1st/Reverse Clutch (Aluminum Piston)(3 Pieces) 2007-Up ..... 1 .....
277569A ..... Piston Kit, U660E No. 3 Brake Clutch (1.580"Thick Bonded Piston)(3 Pieces) 2007-Up ..... 1 .....
277569B ..... Piston Kit, U760E No. 3 Brake Clutch (1.610” Thick Aluminum Piston)(3 Pieces) 2008-Up ..... 1 .....

© Whatever It Takes Transmission Parts. Inc.

PART #	HARDPARTS (Continued)	QTY	REFERENCE #
277571A	Hub, U660E/U760E No. 1 Brake Clutch (40 Outer Splines, 36 Inner Splines)(Aluminum) (.900"Thick)(5.907"OD) 2007-Up	1	
277574A	Sun Gear Hub, U660E Output Planet (Rear)(W/Forward Clutch Hub)(30 Teeth Sun Gear) (40 Teeth Hub)(2.405"Tall)(6 Oval Slots) 2007-Up (Will Retro Fit U760E)	1	
277574B	Sun Gear Hub, U760E Output Planet (Rear)(W/Forward Clutch Hub)(30 Teeth Sun Gear) (40 Teeth Hub)(2.405" Tall)(18 Holes) 2008-Up (Will Retro Fit U660E)	1	
277584A	Planet, U660E Output (6 Gear) (5 1/8"Tall)(Uses A 30 Teeth Rear Sun Gear # 574)(6 Long Gear Pins) 2007-Up (Will Retro fit U760E If 277247A Is Used)	1	
277584B	Planet, U760E Output (6 Gear)(5 1/8" Tall)(Uses A 30 Teeth Rear Sun Gear #574)(3 Long And 3 Short Gear Pins) 2008-Up (Will Retro Fit U660E If 277247B Is Used)	1	
277586A	Planet, U660E/U760E Underdrive (4 Gear)(Uses A 66 Teeth Sun Gear)(Comes With #571 To Hold In The Pinion Pins) 2007-Up	1	
277594A	Ring Gear, U660E Output Planet (69 Teeth)(40 Outer Splines Front, 32 Outer Splines Rear) 2007-Up (Will Retro Fit U760E)	1	
277594B	Ring Gear, U760E Output Planet (69 Teeth)(40 Outer Splines Frony, 40 Outer Splines Rear) 2008-Up (Will Retro Fit U660E)	1	
277596A	Ring Gear, U660E/U760E Underdrive Planet (110 Teeth)(40 Outer Lugs)(.782"Thick) 2007-Up (Without Clutch Hub Or Snap Ring)	1	
277604A	Hub, U660E/U760E Output Planet Ring Gear (69 Teeth)(4.775"OD)(2.240"ID) 2007-Up	1	
277614A	Sun Gear, U660E Output Planet (Front)(27 Teeth)(3.720"Long)(24 Splines, 1.160" Long) 2007-Up	1	
277614B	Sun Gear, U760E Output Planet (Front)(27 Teeth)(3.665" Long)(24 Splines, 1.305" Long) 2008-Up	1	
277616A	Sun Gear, U660E/U760E Underdrive Planet (66 Teeth)(.755"Thick)(2.985"OD) (W/39 Inner Splines) 2007-Up	1	
277639A	Anti-Clunk Spring, U660E/U760E Sprag Outer Race (.177"Thick) 2007-Up	1	

PART #	SPRAGS	QTY	REFERENCE #
277654A	Sprag, U660E/U760E (1 Way Clutch)(20 Elements W/Plastic Cage)(.720"Wide)(6 1/4"OD) 2007-Up	1	
277665A	Outer Race, U660E/U760E (1 Way Clutch) Sprag (14 Lugs)(.645"Thick) 2007-Up	1	
277670A	Input Shaft, U660E/U760E (6.055" Long)(.750"OD Pilot)(22 Converter Splines)(18 Rear Inner Splines)(3 Ring) 2007-Up	1	
277694A	Spacer, U660E Spacer Between #864 & #865 (Stepped)(.335" Wide ID To OD) (.152" Thick /.102" Thick) 2007-Up	1	
277694B	Spacer, U760E Spacer Between #864 & #865 (Stepped)(.355" Wide ID To OD) (.169" Thick /.102" Thick) 2008-Up	1	

PART #	HARDPARTS (Continued)	QTY	REFERENCE #
277697-1AK	Bolt Set, U660E/U760E Oils Shield To Rear Cover (2 Pieces) 2007-Up	1	
277697A	Oil Shield, U660E/U760E Rear Cover (2 Bolt, W/Slot)(2.610"Long) 2007-Up	1	
277698B	Oil Deflector, U760E Differential (Tin, 3 Bolt)(3 5/8" Tall) 2008-Up	1	
277698-1B	Oil Deflector, U760E Differential (Tin, 1 Bolt)(2 3/8" Tall)(4 1/16" Long)(Case Side) 2008-Up	1	
277710A	Gear, U660E Drive Transfer (44 Teeth)(36 Inner Splines)(1.925"Thick)(5.550"OD)(3 Threaded Holes) 2007-Up	1	
277710B	Gear, U760E Drive Transfer (44 Teeth)(36 Inner Splines)(1.925" Thick)(5.550"OD)(2 Threaded Holes) 2008-Up	1	
277715A	Differential Assembly, U660E (69 Teeth ,1 Groove Ring Gear, 1.590" Thick)(12 Bolt) 2007-Up	1	
277715B	Differential Assembly, U760E (73 Teeth, No Groove Ring Gear, 1.425"Thick)(12 Bolt) 2008-Up	1	
277730A	Pinion, U660E (20 Teeth, 1 Groove Pinion Gear)(With 47 Teeth Driven Transfer Gear) 2007-Up	1	
277730B	Pinion, U760E (20 Teeth, No Groove Pinion Gear)(With 46 Teeth Driven Transfer Gear) 2008-Up	1	
277740A	Valve Body, U660E (W/7 Solenoids)(Cast # 80070) 2007-Up	1	
277740B	Valve Body, U760E (W/7 Solenoids)(Cast # 80030) 2007-Up	1	

PART #	VALVE BODY COMPONENTS	QTY	REFERENCE #
277741-1MA	Valve, U660E/U760E Manual (3.755" Long) 2007-Up	1	
S277741A-ZK	Zip Kit, U660E 2007-Up (Sonnax)	1	
S277741B-ZK	Zip Kit, U760E 2008-Up	1	
S277741COK	Valve Kit, U760E/U760F Lock-up Control (Oversized)(Contains Control Valve, Spring, Plunger Valve & Plunger Sleeve)(Sonnax)(Must Use T-F-47740-TL30)	1	
S277741CK	Valve Kit, U660E/F/U760E/F Lock-Up Control Boost (Contains Valve & Sleeve)(Sonnax)	1	
S277741PK	Valve Kit, U660E/F/U760E/F Secondary Pressure Regulator (Oversized)(Contains Valve & End Plug)(Sonnax)(Must Use T-F-47740-TL26)	1	
T-F-47740-TL26	Tool Kit For S277741PK (Contains Reamer Jig & Guide Pin)(Sonnax)	1	
T-F-47740-TL30	Tool Kit For S277741COK (Contains Reamer, Reamer Jig & Guide Pin)(Sonnax)	1	

© Whatever It Takes Transmission Parts. Inc.

PART #	HARDPARTS (Continued)	QTY	REFERENCE #
277750A	Bell Housing, U660E (Open Starter Hole At 1:00)(20 Bolts To Case)(Bearing #291 Has 3.543"OD, 2.975"ID, .665" Thick) 2007-Up	1	
277750B	Bell Housing, U760E (Open Starter Hole At 1:00)(20 Bolts To Case)(Bearing #291 Has 3.150"OD, 2.690"ID, .610" Thick) 2008-Up	1	
277759A	Rear Cover, U660E/U760E (Aluminum)(14 Bolt, With 4 Extra Holes)(No Cast #) 2007-Up	1	
277759B	Rear Cover, U660E/U760E (Aluminum)(14 Bolt, W/4 Extra Holes)(Cast # U7)(1 Bolt Mounting Boss) 2008-Up	1	
277760A	Case, U660E (Cast # U660)(18 Bolts To Pan)(14 Bolts To Rear Cover) 2007-Up	1	
277760B	Case, U760E (Cast # U760)(19 Bolts To Pan)(14 Bolts To Rear Cover) 2008-Up	1	
277765A	Pan, U660E Bottom (18 Bolt)(2 1/4" Deep At Deep End) 2007-Up	1	
277765B	Pan, U760E Bottom (19 Bolt)(2 1/4" Deep At Deep End) 2008-Up	1	
277776AK	Bolt Set, U660E/U760E Bell Housing To Case (20 Pieces) 2007-Up	1	
277778-1AK	Bolt Set, U660E/U760E Pump Body To Stator (Rear Side)(7 Pieces) 2007-Up	1	
277778AK	Bolt Set, U660E/U760E Pump Body To Stator (Front Side)(9 Pieces) 2007-Up	1	
277779AK	Bolt Set, U660E Bottom Pan To Case (18 Pieces) 2007-Up	1	
277779BK	Bolt Set, U760E Bottom Pan To Case (19 Pieces) 2008-Up	1	
277780AK	Bolt Set, U660E/U760E Rear Cover To Case (14 Pieces) 2007-Up	1	
277782AK	Bolt Set, U660E Valve Body To Case (11 Pieces, 5 Different Lengths) 2007-Up	1	
277782BK	Bolt Set, U760E Valve Body To Case (11 Pieces, 3 Different Lengths) 2008-Up	1	
277786AK	Bolt Set, U660E Ring Gear To Differential Housing (12 Pieces)(1.435" Long) 2007-Up	1	
277786BK	Bolt Set, U760E Ring Gear To Differential Housing (12 Pieces)(1.353" Long) 2008-Up	1	
277787AK	Bolt Set, U660E/U760E Stator To Case (7 Pieces) 2007-Up	1	
277795A	Nut, U660E/U760E Holds Output Planet To Drive Transfer Gear (.275"Thick)(3.330"OD) (2.305"ID)(W/9 OD Notches) 2007-Up	1	
277862A	Snap Ring, U660E/U760E Holds No. 3 Brake Clutch Piston Return Spring In Case (.047"Thick) (4.445"OD) 2007-Up	1	
277864A	Snap Ring, U660E Holds No. 1 Brake Clutch Pressure Plate In Stator (.063"Thick)(7 1/2"OD) (.255"Wide)(W/1 Tab On The Outside & In The Center Between The Ends) 2007-Up	1	
277864B	Snap Ring, U760E Holds No. 1 Brake Clutch Pressure Plate In Stator (.081" Thick)(7 1/2"OD) (.255" Wide)(W/1 Tab On The Outside & In The Center Between The Ends) 2008-Up	1	
277865A	Snap Ring, U660E Holds No. 3 Brake Clutch Steel # 132 In The Stator (.063"Thick)(7 1/2"OD) (.255"Wide)(W/1 Tab On The Outside & At The End) 2007-Up	1	
277865B	Snap Ring, U760E Holds No. 3 Brake Clutch Steel #132 In The Stator (.079" Thick)(7 1/2"OD) (.255"Wide)(W/1 Tab On The Outside At The End) 2008-Up	1	
277867A	Snap Ring, U660E/U760E No. 1 Brake Clutch Hub To Underdrive Planet (.089"Thick)(4.880"OD) 2007-Up	1	
277870A	Snap Ring, U660E/U760E Holds No. 3 Brake Clutch Pressure Plate In Stator (.098"Thick) (7 7/8"OD)(W/Hooked Ends) 2007-Up	1	
277876A	Snap Ring, U660E/U760E Holds Direct & Forward Clutch Pressure Plate In (.079"Thick) (6 7/8"OD) 2007-Up	2	
277877A	Snap Ring, U660E/U760E Holds Forward Clutch Piston Retainer In Drum (.047"Thick) (1.650"OD) 2007-Up	1	
277878A	Snap Ring, U660E/U760E Holds Direct Clutch Piston # 965 To The Apply Sleeve # 548 (.101"Thick)(7 1/2"OD) 2007-Up	1	
277879A	Snap Ring, U660E/U760E Holds Direct Clutch Piston HousingTo Drum (.047"Thick)(2.775"OD) 2007-Up	1	
277885A	Snap Ring, U660E/U760E Holds 1st/Reverse Clutch Pressure Plate In (.082"Thick)(7 5/8"OD) 2007-Up	1	
277887A	Snap Ring, U660E/U760E Holds Sun Gear Hub # 574 In Drum # 555 (.048"Thick)(1.190"OD) 2007-Up	1	
277888A	Snap Ring, U660E/U760E Holds Sun Gear # 614 To Underdrive Planet (.055"Thick)(1.465"OD) (W/2 Eyelets) 2007-Up	1	
277889A	Snap Ring, U660E/U760E Holds Hub To Ring Gear (.055"Thick)(5.260"OD) 2007-Up	1	
277892A	Snap Ring, U660E/U760E Holds Sprag Outer Race In Case (.055"Thick)(8"OD) 2007-Up	1	
277893A	Snap Ring, U660E/U760E Holds 1st/Reverse Clutch Piston Retainer In Case (.062"Thick) (7 3/4"OD) 2007-Up	1	
277960AK	Piston Kit, U660E 2007-Some 09	1	
277960AAK	Piston Kit, U660E 2007-Some 09	1	
277960BK	Piston Kit, U760E 2008-Up (4 Bonded Pistons)	1	
277961A	Piston, U660E No. 1 Brake Clutch (Aluminum)(.630"Thick)(5.395"OD) 2007-Up	1	
277961B	Piston, U760E No. 1 Brake Clutch (Aluminum)(.695"Thick)(5.395"OD) 2008-Up	1	
277964A	Piston, U660E/U760E Forward Clutch (Bonded)(.830"Thick)(6 1/4"OD)(1.898"ID) 2007-Up	1	
277965A	Piston, U660E Direct Clutch (Bonded)(2.665"ID)(8 Lugs)(4 Slots) 2007-Some 09	1	
277965AHP	Piston, U660E Direct Clutch (Bonded)(2.665"ID)(8 Lugs) (4 Slots)(Hyper-Blue) 2007-Some 09	1	
277965B	Piston, U760E/(Some U660E) Direct Clutch (Bonded)(2.665"ID)(40 Lugs)(No Slots) 2008-Up	1	
277967A	Piston, U660E/U760E 1st/Reverse Clutch (Aluminum)(.620"Thick)(7"OD)(5 3/8"ID)(16 Spring Pockets) 2007-Up	1	
277969A	Piston, U660E No. 3 Brake Clutch (Bonded)(1.580"Thick)(6 13/16"OD) 2007-Up	1	

© Whatever It Takes Transmission Parts. Inc.

PART #	HARDPARTS (Continued)	QTY	REFERENCE #
277969B	Piston, U760E No. 3 Brake Clutch (Aluminum)(1.610” Thick)(6 7/8”OD)(4.730”ID) 2008-Up	1	
277974A	Retainer W/Springs, U660E Forward Clutch Piston Return (21 Springs)(.745”Thick)(4.405”OD) (3.300”ID) 2007-Up	1	
277974B	Retainer W/Springs, U760E Forward Clutch Piston Return (20 Springs)(.745” Thick)(4.405”OD) (3.300”ID) 2008-Up (Will Retro Fit U660E)	1	
277975A	Retainer W/Springs, U660E Direct Clutch Piston Return (.720"Thick)(4.075"OD)(3.205"ID) (21 Springs) 2007-Up	1	
277975B	Retainer W/Springs, U760E Direct Clutch Piston Return (.720”Thick)(4.075”OD)(3.205”ID) (20 Springs) 2008-Up (Will Retro Fit U660E)	1	
277981AK	Return Spring Set, U660E/U760E No. 1 Brake Clutch Return (3 Pieces)(4 Springs Per Piece) 2007-Up	1	
277984A	Retainer, U660E/U760E Forward Clutch Piston (Bonded)(.665"Thick)(5.660"OD)(1.460"ID) 2007-Up	1	
277985A	Retainer/Housing, U660E/U760E Direct Clutch Piston (Steel)(6 1/4"OD)(2.635"ID) 2007-Up	1	
277987A	Retainer W/Springs, U660E/U760E 1st/Reverse Clutch Piston (16 Springs)(7 1/4"OD)(5.755"ID) 2007-Up	1	
277989A	Spring, U660E No. 3 Brake Clutch Piston Return (.058"Thick)(6.030"OD)(12 Fingers) 2007-Up	1	
277989B	Spring, U760E No. 3 Brake Clutch Piston Return (.555”Thick)(5.820”OD)(32 Coil Springs) 2008-Up	1	
277991-1A	Lever, U660E Park Pawl (2.095"Long)(.475"ID) 2007-Up	1	
277991-2A	Detent, U660E/U760E Rooster Comb (3.906"Long)(1 Bolt) 2007-Up	1	
277991-3A	Rooster Comb, U660E (.475"ID Hole)(W/4 Notches) 2007-Up	1	
277991-4A	Linkage Shaft, U660E (9 1/2" Long)(W/Threaded End) 2007-Up	1	
277991-4B	Linkage Shaft, U760E (9 1/2” Long)(W/Threaded End)(W/Rod Actuator) 2008-Up	1	
277991-5A	Roll Pin, U660E Holds Internal Levers To Manual Shaft (.775"Long)(.155"OD) 2007-Up	2	
277991-6A	Wire Clip, U660E/U760E Holds Linkage Shaft To Case (.077"Thick Wire, 2.320"Long) 2007-Up	1	
277991-8A	Retainer, U660E Linkage Roll Pin (Sleeve)(.475"Wide)(.835"OD) 2007-Up	2	
277991-9A	Bracket, U660E/U760E Detent (1.320" Long)(1.045"Wide)(1 Bolt) 2007-Up	1	
277992A	Manual Lever, U660E/U760E External (.830"Wide)(W/2 Key Hole Slots) 2007-Up	1	
277995A	Park Pawl Assembly, U660E (8 Pieces) 2007-Up	1	
277995B	Park Pawl Assembly, U760E (8 Pieces) 2008-Up	1	
277996-1A	Fitting, U660E/U760E Cooler Line (Front, Upper)(Straight)(2.120"Long) 2007-Up	1-2	
277996A	Fitting, U660E Cooler Line (Rear, Lower)(Elbow)(2.160"Long) 2007-Up	1	
277999-6A	Bracket, U660E Holds Oil Tube To Bell Housing 2007-Up	1	
277999A	Oil Tube, U660E/U760E In Bell Housing (.255"OD) 2007-Up	1	

© Whatever It Takes Transmission Parts. Inc.

© Whatever It Takes Transmission Parts. Inc.

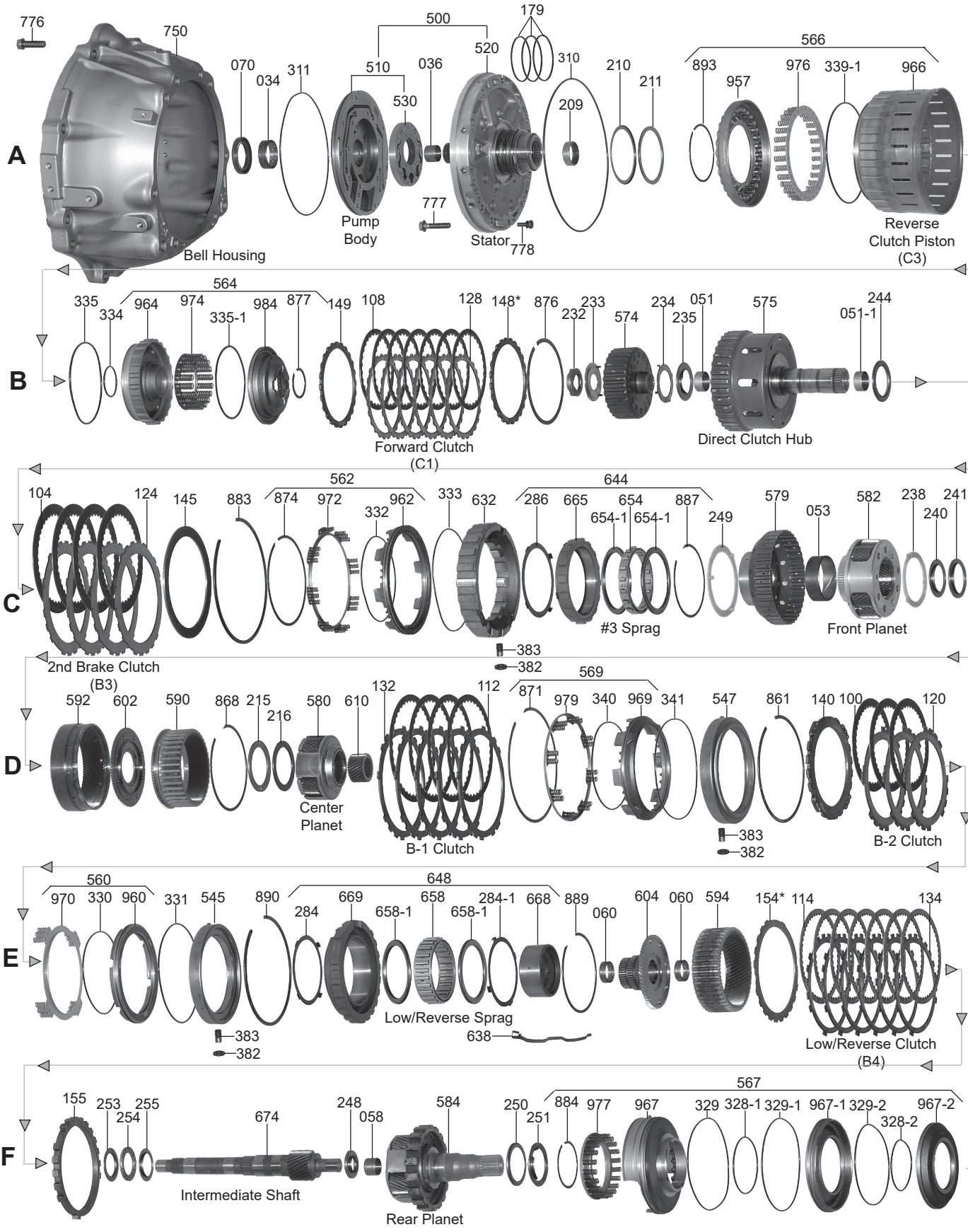

TOYOTA

© Whatever It Takes Transmission Parts. Inc.

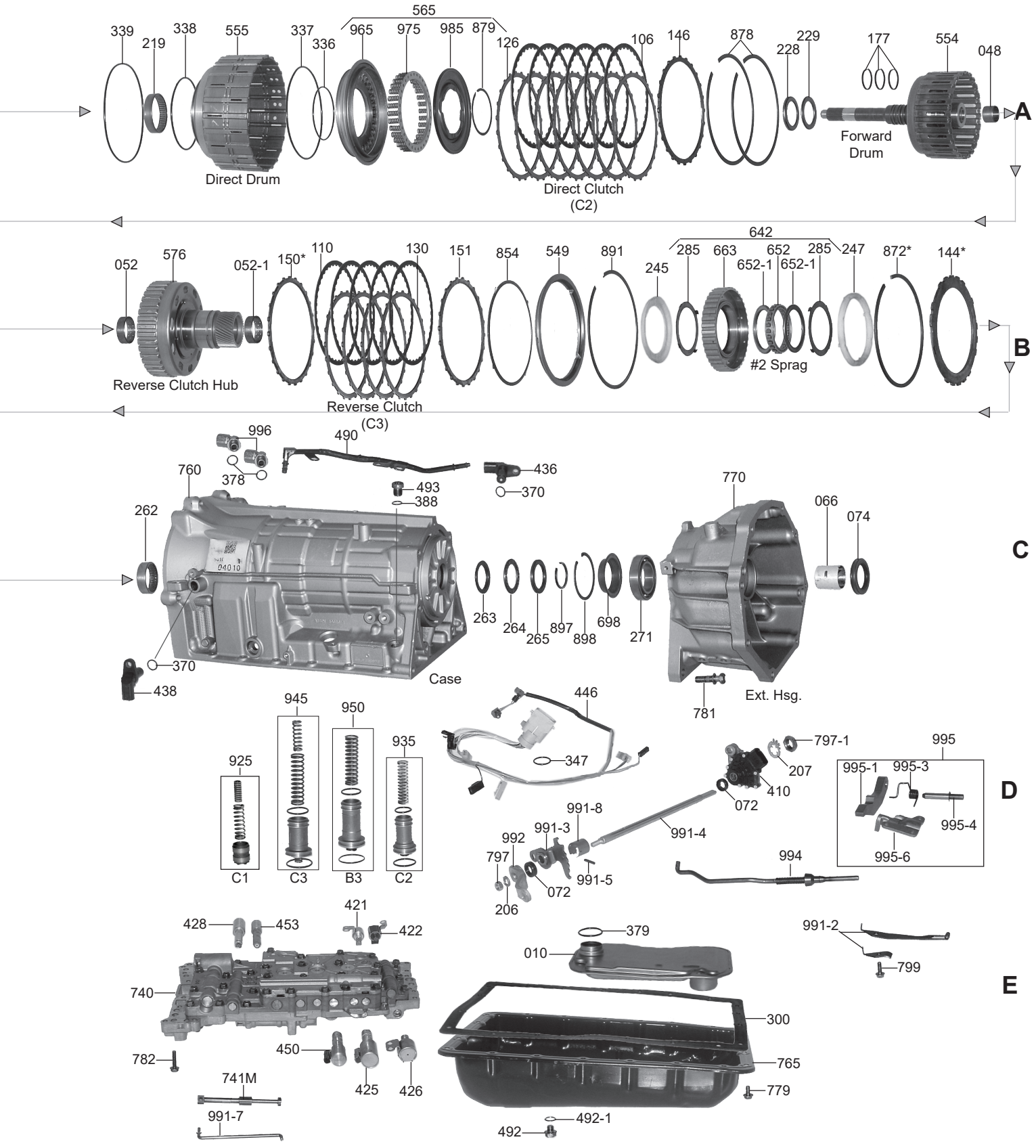

TOYOTA

1-800-940-0197

© Whatever It Takes Transmission Parts. Inc.

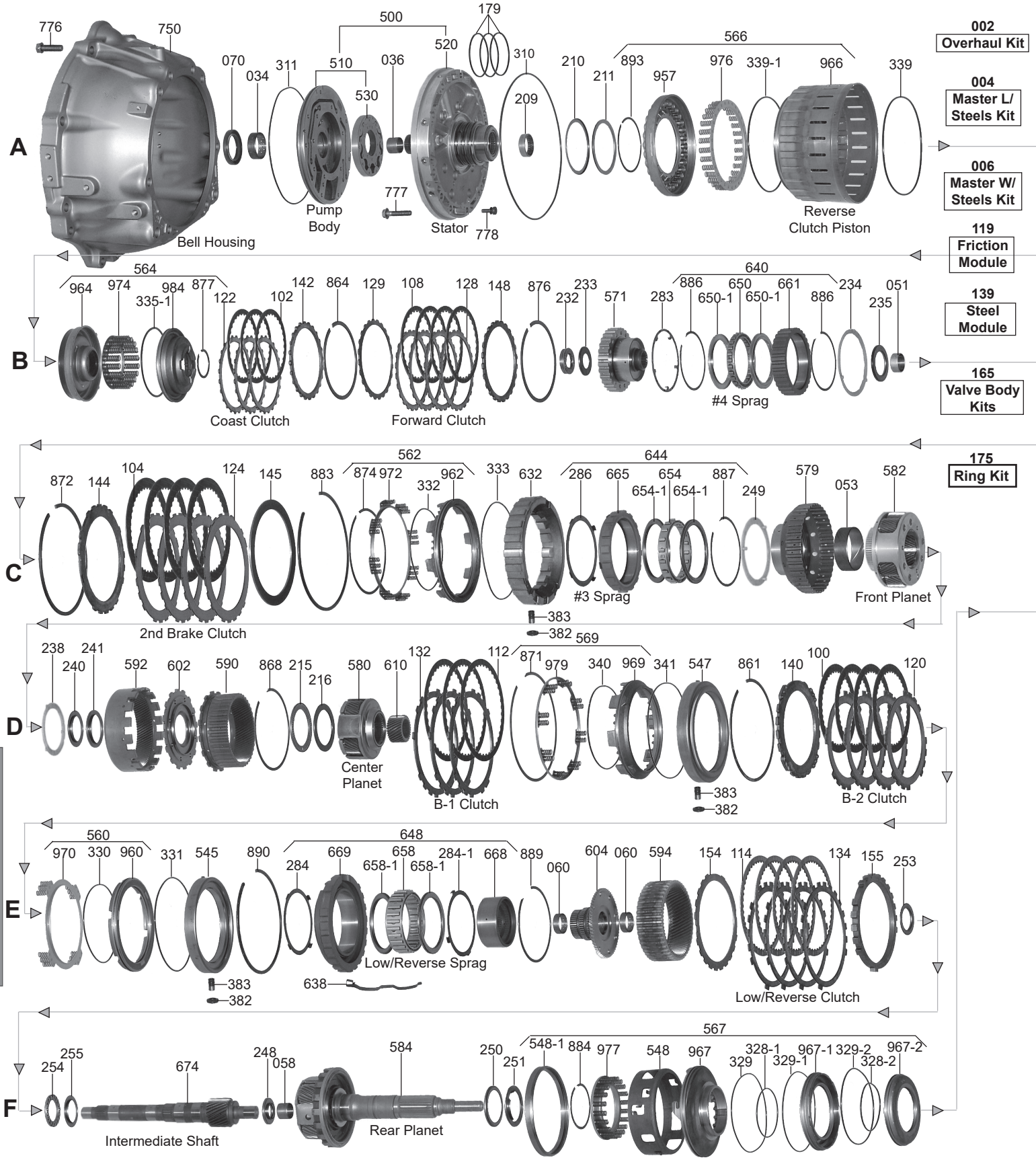

TOYOTA

© Whatever It Takes Transmission Parts. Inc.

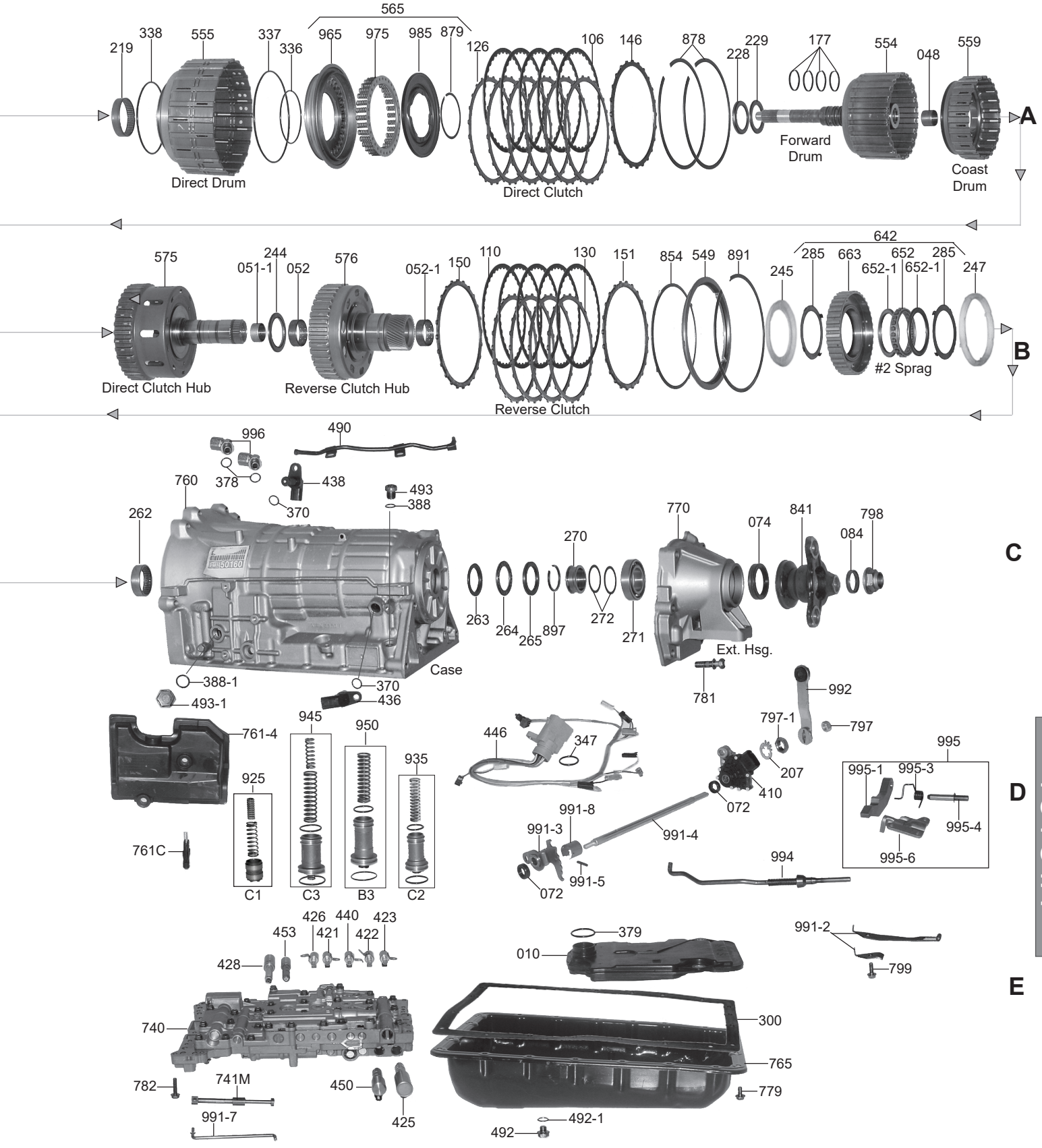

© Whatever It Takes Transmission Parts. Inc.

PART #	OVERHAUL KIT	QTY	REFERENCE #
117002A	Overhaul Kit, A750 2003-Up	1	
117002B	Overhaul Kit, A761 2004-Up	1	

PART #	MASTER L/STEELS KIT	QTY	REFERENCE #
117004A	Master L/Steels Kit, A750 2003-Up	1	
117004B	Master L/Steels Kit, A761 2004-Up	1	

PART #	MASTER W/STEELS KIT	QTY	REFERENCE #
117006A	Master W/Steels Kit, A750 2003-Up	1	
117006B	Master W/Steels Kit, A761 2004-Up	1	

PART #	FILTERS	QTY	REFERENCE #
117010A	Filter, A750 (Metal)(4 Bolts)(3 Ribes) 2003-Up	1	
117010B	Filter, A761 (Plastic)(4 Bolts) 2004-Up	1	

PART #	BUSHINGS	QTY	REFERENCE #
117030A	Bushing Kit, A750E/A760E/A761E (11 Pieces) (For 2WD 5 Speed Add One 97066) 2003-Up	1	
57034A	Bushing, A750/A761 Pump Body (1.500"ID)(Brass W/Oil Pockets) 2003-Up	1	
117034A	Bushing, A750E/A761E Pump Body 2003-Up (Dura Bond)	1	
57036B	Bushing, A750/A761 Stator (Front)(.848"ID)(.680"Wide)(Babbit) 2003-Up	1	
57036CB	Bushing, A750/A761 Stator (Front)(.864"ID)(.680"Wide)	1	
117048A	Bushing, A750/A761 Forward Drum (Rear)(.315"Wide, .920"OD, .785"ID) 2003-Up	1	
117051-1A	Bushing, A750/A761 Direct Clutch Hub (Rear)(1.145"OD, 1.025"ID)(W/Dimples) 2003-Up	1	
117051A	Bushing, A750/A761 Direct Clutch Hub (Front)(1.145"OD, 1.025"ID)(4 Slots) 2003-Up	1	
117052-1A	Bushing, A750/A761 Reverse Clutch Hub (Rear)(1.527"OD, 1.395"ID) 2003-Up	1	
117052A	Bushing, A750/A761 Reverse Clutch Hub (Front)(1.555"OD, 1.395"ID)(4 Slots) 2003-Up	1	
117053A	Bushing, A750/A761 Front Planet (Front)(.990"Thick, 2.255"ID) 2003-Up	1	
117058A	Bushing, A750/A761 Rear Planet (Front) To Intermediate Shaft (.595"Wide, .800"ID) 2003-Up	1	
117060A	Bushing, A750/A761 Rear Planet Hub (Front & Rear)(1.382"OD, 1.265"ID) 2003-Up	1	
117066A	Bushing, A750 (2wd) Extension Housing (1.130"Long, 1.745"OD, 1.575"ID) 2003-Up	1	

PART #	METAL CLAD SEALS	QTY	REFERENCE #
57070A	Seal, A750/A761 Pump 2003-Up	1	
97074	Seal, A750 Extension Housing 2WD (40X58X11mm) 2003-Up	1	
117074A	Seal, A750 Extension Housing 4X4 (42X58X7mm) 2003-Up	1	
117074B	Seal, A761 Extension Housing 2wd (Bolt-On Yoke)(40 X 55 X 11 MM) 2004-Up	1	
97074B	Seal, A750 Extension Housing 4X4 (49X62X7mm) 2003-Up	1	
97074C	Seal, A761 Extension Housing 2WD (42X55X11mm) 2004-Up	1	
117084B	Seal, A761 2WD Yoke To Output Shaft (28X36X7mm) 2004-Up	1	

PART #	FRICTIONS	QTY	REFERENCE #
117100A	Friction, A750 B-2 Clutch (.063")(40 Teeth) (5.440"OD) (W/Grooves) 2003-Up (Also Fits A761 (Takes 4)	3	
117100B	Friction, A761 B-2 Clutch (.063")(40 Teeth) (5.440"OD)(Turtle Shell) 2004-Up (Use 117100A)	4	
117102B	Friction, A761 Coast Clutch (.060") (30 Teeth)(4.495"OD) 2004-Up	3	
117104A	Friction, A750/A761 2nd Brake Clutch (.072")(40 Teeth)(6 7/16"OD) 2003-Up	4	
117106A	Friction, A750/A761 Direct Clutch (.060")(36 Teeth)(6 3/8"OD) 2003-Up (A750 Takes 6) (A761 Takes 5)	5-6	
117108A	Friction, A750 Forward Clutch (.075") (30 Teeth)(4.705"OD) 2003-Up	7	
117108B	Friction, A761 Forward Clutch (.058") (30 Teeth)(4.705"OD) 2004-Up	4	
117110A	Friction, A750/A761 Reverse Clutch (.060") (40 Teeth)(6 3/8"OD) 2003-Up	5	
117112A	Friction, A750/A761 B-1 Clutch (.076")(40 Teeth)(6 1/4"OD) 2003-Up (A750 Takes 4) (A761 Takes 3)	3-4	
117114A	Friction, A750 Low/Reverse Clutch (.061") (48 Teeth)(Grooved) 2003-Up	8	
117114B	Friction, A761 Low/Reverse Clutch (.061") (48 Teeth)(Turtle Shell) 2004-Up	4	
117119A	Friction Module, A750 2003-Up	1	
117119B	Friction Module, A761 2004-Up (Allomatic)	1	

© Whatever It Takes Transmission Parts. Inc.

PART #	STEELS	QTY	REFERENCE #
117120A	Steel, A750/A761 B-2 Clutch (.079")(13 Teeth)(4.540"ID) 2003-Up (A750 Takes 3) (A761 Takes 4)	3-4	
117122B	Steel, A761 Coast Clutch (.070") (24 Teeth)(3.965"ID) 2004-Up	3	
117124A	Steel, A750/A761 2nd Brake Clutch (.078")(16 Teeth)(5.200"ID) 2003-Up	4	
117126A	Steel, A750/A761 Direct Clutch (.071")(24 Teeth)(5.870"ID) 2003-Up (A750 Takes 7) (A761 Takes 6)	6-7	
117128A	Steel, A750 Forward Clutch (.071") (24 Teeth)(4.175"ID) 2003-Up	6	
117128B	Steel, A761 Forward Clutch (.095") (24 Teeth V Notched)(4.175"ID) 2004-Up	4	
117129B	Steel, A761 Forward Clutch (.073") (24 Teeth)(4.200"ID)(Dished) 2004-Up	7	
117130A	Steel, A750/A761 Reverse Clutch (.093") (24 Teeth)(5.875"ID) 2003-Up (With 2 V Notched Teeth)	4	
117132A	Steel, A750/A761 B-1 Clutch (.095")(13 Teeth)(5.530"ID) 2003-Up (A750 Takes 5) (A761 Takes 3)	3-5	
117132B	Steel, A761 B-1 Clutch (.087") (13 Teeth)(5.530"ID) 2004-Up	3	
117134A	Steel, A750/A761 Low/Reverse Clutch (.070")(16 Teeth)(4.925"ID) 2003-Up (A750 Takes 6) (A761 Takes 4)	4-6	
117139A	Steel Module, A750 2003-Up	1	
117139B	Steel Module, A761 2004-Up	1	

PART #	PRESSURE PLATES	QTY	REFERENCE #
117140A	Pressure Plate, A750/A761 B-2 Clutch (.180")(17 Teeth)(4.540"ID)(W/12 Spring Seats) 2003-Up	1	
117142B	Pressure Plate, A761 Coast Clutch (.133") (24 Teeth)(3.960"ID) 2004-Up	1	
117144A	Pressure Plate, A750/A761 2nd Brake Clutch (.157")(16 Teeth)(5.195"ID) 2003-Up	1	
117145A	Apply Plate, A750/A761 2nd Brake Clutch (.120")(No Teeth)(6 1/2"OD, 5.275"ID) 2003-Up	1	
117146A	Pressure Plate, A750 Direct Clutch (.125")(24 Teeth)(5.875"ID) 2003-Up	1	
117146B	Pressure Plate, A761 Direct Clutch (.117")(24 Teeth)(5.875"ID) 2004-Up	1	
117148A	Pressure Plate, A750 Forward Clutch (.125")(24 Teeth)(4.175"ID) 2003-Up	1	
117148B	Pressure Plate, A761 Forward Clutch (.138")(24 Teeth V Notched)(4.175"ID) 2004-Up	1	
117149A	Apply Plate, A750 Forward Clutch (.118")(24 Teeth)(4.180"ID) 2003-Up	1	
117150A	Pressure Plate, A750/A761 Reverse Clutch (.117")(24 Teeth)(5.875"ID)(# 2) 2003-Up (With 2 V Notched Teeth)	1	
117151A	Apply Plate, A750/A761 Reverse Clutch (.129")(24 Teeth)(5.875"ID)(# 5) 2003-Up (With 2 V Notched Teeth)	1	
117154AD	Pressure Plate, A750/A761 Low/Reverse Clutch (.086")(16 Teeth)(4.920"ID)(# 4)(Stepped) 2003-Up	1	
117154AF	Pressure Plate, A750/A761 Low/Reverse Clutch (.094")(16 Teeth)(4.920"ID)(# 6)(Stepped) 2003-Up	1	
117155A	Apply Plate, A750 Low/Reverse Clutch (.355")(16 Teeth)(4.920"ID) 2003-Up	1	
117155B	Apply Plate, A761 Low/Reverse Clutch (.490")(16 Teeth)(4.975"ID) 2004-Up	1	

PART #	VALVE BODY KITS	QTY	REFERENCE #
A117165A	Valve Body Kit, A750 2003-08 (Transcel)	1	
T117165A-NTA	Shift Kit, Toyota A750/A760 & Lexus A761E/A960 (No Reamer Tool) 2003-Up (Updated) (Must Use Tool From The T117165A-WTA)(Transgo)	1	
T117165A-WTA	Shift Kit, Toyota A750/A760 & Lexus A761E/A960E (With Reamer Tool) 2003-Up (Updated) (Transgo)	1	
A117165B	Valve Body Kit, A761 2004-Up (Transcel)	1	

PART #	SEALING RINGS	QTY	REFERENCE #
117175A	Ring Kit, A750E/A750F/A761E 2003-Up	1	
117177AT	Ring, A750/A761 Input Shaft (.089"Thick, 1.260"OD)(Teflon) 2003-Up (A750 Takes 3) (A761 Takes 4)	3-4	
117179AT	Ring, A750/A761 Stator To Direct Drum (.090"Thick, 2.655"OD)(Teflon) 2003-Up	3	

PART #	WASHERS & BEARINGS	QTY	REFERENCE #
117209A	Caged Needle Bearing, A750/A761 Stator (Rear)(1.540"OD)(Cast #NSK 08503406) 2003-Up	1	
117210A	Race, A750/A761 Stator To Direct Drum (3.445"OD, 2.930"ID) 2003-Up	1	
117211A	Bearing W/Race, A750/A761 Stator To Direct Drum (.110"Thick, 3.360"OD, 2.835"ID) 2003-Up	1	
117215A	Bearing W/Race, A750/A761 Ring Gear Hub To Center Planet (.110"Thick, 3.000"OD, 2.195"ID) 2003-Up	1	
117216A	Race, A750/A761 Ring Gear Hub To Center Planet (.078"Thick, 2.908"OD, 2.120"ID) 2003-Up	1	
117219A	Caged Needle Bearing, A750/A761 Direct Drum (Front)(.550"Wide, 2.375"OD) (Cast # KOYO BSM556014BJ-1) 2003-Up	1	
117228A	Race, A750/A761 Stator To Forward Drum (2.055"OD, 1.460"ID)(Cupped) 2003-Up	1	

© Whatever It Takes Transmission Parts. Inc.

PART #	WASHERS & BEARINGS (Continued)	QTY	REFERENCE #
117229A	Bearing W/Race, A750/A761 Stator To Forward Drum (.130”Thick, 2.035”OD, 1.370”ID) 2003-Up	1	
117232A	Bearing W/Race, A750 Forward Drum To Forward Hub (.320”Thick, 1.605”OD, .850”ID) (W/4 Notches) 2003-Up	1	
117232B	Bearing W/Race, A761 Forward Drum To Inner Sprag Race (.320”Thick, 1.605”OD, .842”ID) 2004-Up	1	
117233A	Race, A750 Forward Drum To Forward Hub (4 Tab)(2.215”OD) 2003-Up	1	
117233B	Race, A761 Forward Drum To Inner Sprag Race (Cupped)(1.755”OD, .895”ID) 2004-Up	1	
117234A	Race, A750 Forward Clutch Hub To Direct Clutch Hub (2.220”OD, 1.520”ID)(4 Tabs) 2003-Up	1	
117234B	Washer, A761 Outer Sprag Race To Direct Clutch Hub (Plastic)(.110”Thick, 4.075”OD, 3.540”ID) (3 Tabs) 2004-Up	1	
117235A	Bearing W/Race, A750 Forward Clutch Hub To Direct Clutch Hub (.110”Thick, 2.220”OD, 1.310”ID) 2003-Up	1	
117235B	Bearing W/Races, A761 Inner Sprag Race To Direct Clutch Hub (.140”Thick, 2.220”OD, 1.405”ID) 2004-Up	1	
117238A	Washer, A750/A761 Front Planet To Ring Gear Hub (.062”Thick, 3.200”OD, 2.520”ID)(Plastic, 3 Tab) 2003-Up	1	
117240A	Race, A750/A761 Reverse Clutch Hub W/Sun Gear To Front Planet Ring Gear Hub (.080”Thick, 2.235”OD, 1.500”ID) 2003-Up	1	
117241A	Bearing W/Race, A750/A761 Reverse Clutch Hub W/Sun Gear To Front Planet Ring Gear Hub (.130”Thick, 2.285”OD, 1.710”ID) 2003-Up	1	
117244A	Bearing W/Races, A750/A761 Direct Clutch Hub To Reverse Clutch Hub (.140”Thick, 2.400”OD, 1.680”ID) 2003-Up	1	
117245A	Washer, A750/A761 Reverse Clutch Hub To # 2 Sprag (.250”Thick, 4.015”OD, 2.895”ID) (Plastic, 4 Tabs) 2003-Up	1	
117247A	Washer, A750/A761 # 2 Sprag To # 3 Sprag (.302”Thick, 4.420”OD, 3.780”ID)(Plastic, W/4 Round Tabs) 2003-Up	1	
117248A	Bearing W/Races, A750/A761 Intermediate Shaft To Rear Planet (.180”Thick, 1.555”OD, .850”ID) 2003-Up	1	
117249A	Washer, A750/A761 # 3 Sprag To B1 Clutch Hub (.058”Thick, 4.220”OD)(Plastic, 3 Tab) 2003-Up	1	
117250A	Race, A750/A761 Rear Planet To Case (Front)(.033”Thick, 2.465”OD, 1.915”ID) 2003-Up	1	
117251A	Bearing W/Race, A750/A761 Rear Planet To Case (.130”Thick, 2.510”OD, 1.840”ID) 2003-Up	1	
117253A	Race, A750/A761 Rear Planet Ring Gear Hub To Intermediate Shaft (Front)(.032”Thick, 1.920”OD, 1.320”ID) 2003-Up	1	
117254A	Bearing, A750/A761 Rear Planet Ring Gear Hub To Intermediate Shaft (.175”Thick, 1.930”OD, 1.270”ID) 2003-Up	1	
117255A	Race, A750/A761 Rear Planet Ring Gear Hub To Intermediate Shaft (Rear)(.118”Thick, 1.925”OD, 1.272”ID) 2003-Up	1	
117262A	Caged Needle Bearing, A750 Rear Planet Shaft To Case (1.640”ID)(Cast # DB-76489) 2003-Up (Can Use 117262B)	1	
117262B	Caged Needle Bearing, A761 Rear Planet Shaft To Case (1.640”ID)(Cast # NSK DB501045W) 2004-Up (Can Use 117262A)	1	
117263A	Race, A750/A761 (2wd) Case To Extension Housing (Front)(.079”Thick, 1.950”OD, 1.455”ID) 2003-Up	1	
117264A	Bearing, A750/A761 (2wd) Case To Extension Housing (.137”Thick, 1.060”OD, 1.425”ID) 2003-Up	1	
117265A	Race, A750 (2wd) Case To Extension Housing (Rear)(.152”Thick, 1.995”OD, 1.430”ID) 2003-Up	1	
117265B	Race, A761 (2wd) Case To Extension Housing (Rear)(.155”Thick, 1.995”OD, 1.430”ID) 2004-Up	1	
117270B	Spacer, A761 (2wd) Output Shaft Snap Ring To Ball Bearing # 271 (.600”Thick, 1.713”OD, 1.350”ID) 2004-Up	1	
117271A	Ball Bearing, A750 (4X4) Extension Housing (.585”Thick, 2.675”OD, 1.575”ID)(Cast # NSK 6008) 2003-Up	1	
117271B	Ball Bearing, A761 (2wd) Output Shaft To Extension Housing (.550”Thick, 2.440”OD, 1.350”ID) (Cast # NSK B34Z-5E1) 2004-Up	1	
117272B	Shim, A761 (2wd) Output Shaft Spacer # 270 To Ball Bearing # 271 (.031”Thick, 1.660”OD, 1.355”ID) 2004-Up	2	
117283B	Washer, A761 Inner Sprag Race To Outer Sprag Race (.060”Thick, 3.180”OD, 3.530”ID)(5 Tabs) 2004-Up	1	
117284-1A	Washer/Retainer, A750/A761 Low/Reverse Sprag (Rear)(.025”Thick, 3.910”OD, 3.465”ID)(4 Tabs) 2003-Up	1	
117284A	Washer/Retainer, A750/A761 Low/Reverse Sprag (Front)(.025”Thick, 4.005”OD, 3.465”ID)(4 Tabs) 2003-Up	1	
117285A	Washer/Retainer, A750/A761 # 2 Sprag (.024”Thick, 3.327”OD, 2.583”ID)(4 Legs) 2003-Up	2	
117286A	Washer/Retainer, A750/A761 # 3 Sprag (Front)(.024”Thick, 3.670”ID)(4 Tabs) 2003-Up	1	

TOYOTA

© Whatever It Takes Transmission Parts. Inc.

PART #	GASKETS & O-RINGS	QTY	REFERENCE #
117300AF	Gasket, A750/A761 Pan (Fiber) 2003-Up	1	
117310A	O-Ring, A750/A761 Stator To Case (.135"Thick, 9 5/16"OD) 2003-Up	1	
183311A	O-Ring, A750/A761 Pump Body 2003-Up	1	
117382A	Seal Collar, A750/A761 Valve Body To Case (Rubber)(.145"Thick, .600"OD, .375"ID) 2003-Up	3	
117383A	Seal Tube, A750/A761 Center Support To Valve Body (Bonded Tubes)(.575"Long, .310"OD) 2003-Up	3	

PART #	TECHNICAL MANUALS	QTY	REFERENCE #
117400A	Technical Manual, A750E/A750F 2003-Up (ATSG)	1	
117400B	Technical Manual, A761 (ATSG)	1	

PART #	ELECTRICAL COMPONENTS	QTY	REFERENCE #
117410A	Neutral Safety Switch, A750 (7 Pin/2 Blade Connector) 2003-Up	1	
117410B	Neutral Safety Switch, A761 (9 Blade Connector) 2004-Up	1	
117421A	Solenoid, A750 S1 (1 Pin Green Connector At 12:00)(W/Square Hole In The Metal End) (W/2 Bolt Bracket) 2003-Up	1	
117421B	Solenoid, A761 S1 (Shift A)(1 Pin Black Connector At 12:00)(W/Square Hole In The Metal End) (W/1 Bolt Bracket) 2004-Up (Also Fits A761 S3 (Shift C) Solenoid # 423 2004-Up)	1-2	
117422A	Solenoid, A750 S2 (Shift B)(1 Blade Black Connector)(Large Hole In The Metal End) (W/1 Bolt Bracket) 2003-Up	1	
117422B	Solenoid, A761 S2 (Shift B)(2 Pin Green Connector At 2:00)(W/Square Hole In The Metal End) 2004-Up	1	
117423B	Use U117421B	1	
117425A	Solenoid, A750/A761 SLU (TCC Control)(2 Blade Grey Connector)(3 5/16"Long) 2003-Up	1	
117425B	Solenoid, A750E/A750F SLU (Lock-Up Linear)(Large Brown Connector)(4.7L V8 Applications) (5-6 Ohms)(Toyota/Lexus) 2002-06	1	
117426A	Solenoid, A750 SR (1 Blade Black Connector)(W/Small Hole In The Metal End)(W/2 Bolt Bracket) 2003-Up	1	
117426B	Solenoid, A761 SR (Shift E)(1 Pin Green Connector At 12:00)(W/Square Hole In The Metal End) 2004-Up	1	
117428A	Solenoid, A750/A761 SLT (Pressure D)(2 Blade Grey Connector)(3 7/8"Long) 2003-Up	1	
117436A	Sensor, A750/A761 Output (2 Blade Connector)(1 Bolt) 2003-Up (Also Fits A750/A761 Input Speed Sensor # 438 2003-Up)	1-2	
117440B	Solenoid, A761 S4 (Shift)(1 Pin Blue Connector At 12:00)(W/Large Round Hole In The Metal End) (W/1 Bolt Bracket) 2004-Up	1	
117445AK	External Repair Harness, A750E/A750F Utilizes The OE 15-Pin Main Connector Along With 18" Of Wire And Heat Shrink Butt Connectors 2004-14	1	
117446A	Wire Harness, A750 Internal (15 Pin Case Connector W/4 Black, 2 White, 1 Green Connectors & 2 Temperature Sensors) 2004-14	1	
117446AA	Wire Harness, A750 Internal (15 Pin Case Connector With 3 Black, 2 Clear, 1 Grey Connectors & 2 Temperature Sensors) 2003-Up	1	
117446B	Wire Harness, A761 Internal (15 Pin Case Connector W/4 Black, 2 White, 2 Green, 1 Blue Connectors & 1 Temperature Sensor) 2004-Up	1	
117450A	Use U117453A	1	
117450B	Solenoid, A750E/A750F (Toyota/Lexus) SL2 Clutch Control Linear (Large White Connector)(4.7L V8 Applications)(5-6 Ohms) 2002-06	1	
117453A	Solenoid, A750/A761 SL1 (Pressure A)(2 Blade Black Connector)(No Hole In Metal End) 2003-Up (Also Fits A750/A761 SL2 (Pressure B) # 450 2003-Up)	1-2	
117453B	Solenoid, A750E/A750F SL1 Clutch Control Linear (Large Brown Connector)(4.7L V8 Applications) (5-6 Ohms) 2002-06	1-2	

PART #	MISCELLANEOUS COMPONENTS	QTY	REFERENCE #
117490A	Vent, A750 Top Case (10 3/4" Long)(2 Bolt) 2003-Up	1	
117490B	Vent, A761 Top Case (9 1/4" Long)(2 Bolt) 2004-Up	1	
117493-1B	Fill Plug, A761(Front Drivers Side)(1.705"Long) 2004-Up	1	
117493A	Fill Plug, A750/A761 (Rear Drivers Side)(.715"Long) 2003-Up	1	

PART #	HARDPARTS	QTY	REFERENCE #
117500A	Pump, A750/A761 Complete (Cast Iron Body, Aluminum Stator) 2003-Up	1	
117510A	Pump Body W/Gears, A750/A761 (Cast Iron)(7 1/8"OD) 2003-Up	1	
117520A	Stator, A750/A761 (Aluminum) (9 1/4"OD) 2003-Up	1	
117530A	Pump Gear Set, A750/A761 (.425"Thick)(9 Teeth Inner & 10 Teeth Outer Gear) 2003-Up	1	

© Whatever It Takes Transmission Parts. Inc.

PART #	HARDPARTS (Continued)	QTY	REFERENCE #
117545A	Housing, A750/A761 B-2 Clutch Piston (Tin, 1 Tab)(5.800”OD, 4.440”ID) 2003-Up	1	
117547A	Housing, A750/A761 B-1 Clutch Piston (.885”Thick, 6 1/8”OD, 4.755”ID) 2003-Up	1	
117548B	Apply Ring, A761 Low/Reverse Clutch (Tin, 5 Tab)(1.650”Thick, 5.185”OD) 2004-Up	1	
117584-1B	Apply Ring, A761 Low/Reverse Clutch (Steel, No Tabs)(.490” Thick, 5.515”OD, 4.935”ID) (Stepped) 2004-Up	1	
117549A	Apply Ring, A750/A761 Reverse Clutch (Aluminum)(.377”Thick, 6 7/8”OD, 5.885”ID) 2003-Up	1	
117554A	Drum W/Shaft, A750 Forward Clutch (9 3/4”Tall)(Uses 24 Teeth Steels (W/24 Slots)(With 3 Ring Input Shaft) 2003-Up	1	
117554B	Drum W/Shaft, A761 Forward Clutch (10”Tall)(Uses 24 Teeth Steels)(No Slots)(With 4 Ring Input Shaft) 2004-Up	1	
117555A	Drum, A750/A761 Direct Clutch (4.285”Tall, 6 7/8”OD, 2.650”ID) 2003-Up	1	
117559B	Drum/Piston, A761 Coast Clutch (.970”Tall, 4.075”OD)(Bonded)(3 Clutch)(24 Teeth Steels) 2004-Up	1	
117560A	Piston Kit, A750 B-2 Clutch (Aluminum Piston .570”Thick)(2 Pieces) 2003-Up	1	
117560B	Piston Kit, A761 B-2 Clutch (Aluminum Piston .440”Thick)(2 Pieces) 2004-Up	1	
117562A	Piston Kit, A750/A761 2nd Brake Clutch (Aluminum Piston)(3 Pieces) 2003-Up	1	
117564A	Piston Kit, A750 Forward Clutch (Aluminum Piston)(4 Pieces) 2003-Up	1	
117564B	Piston Kit, A761 Coast/Forward Clutch (Bonded Piston)(4 Pieces) 2004-Up (Does Not Include # 559)	1	
117565A	Piston Kit, A750 Direct Clutch (Piston Is .875”Thick From Front To Where Steel Plate Sets) (4 Pieces) 2003-Up	1	
117565B	Piston Kit, A761 Direct Clutch (Piston Is 1.020”Thick From Front To Where Steel Plate Sets) (4 Pieces) 2004-Up	1	
117566A	Piston Kit, A750/A761 Reverse Clutch (4 Pieces) 2003-Up	1	
117567A	Piston Kit, A750 Low/Reverse Clutch (Piston # 967 Is 2.055”Thick)(5 Pieces) 2003-Up	1	
117567B	Piston Kit, A761 Low/Reverse Clutch (Piston # 967 Is 1.685”Thick)(6 Pieces) 2004-Up	1	
117569A	Piston Kit, A750/A761 B-1 Clutch (Aluminum Piston 1.375”Thick)(3 Pieces) 2003-Up	1	
17569AA	Piston Kit, A750 B-1 Clutch (Aluminum Piston 1.200”Thick)(3 Pieces) 2003-Up	1	
117571B	Hub/Inner Race, A761 Coast Clutch (30 Teeth)(2.105”Thick)(15 Holes)(This Is Also The # 4 Inner Sprag Race) 2004-Up	1	
117574A	Hub, A750 Forward Clutch (30 Teeth) (2.035”Tall)(23 Holes) 2003-Up	1	
117575A	Hub W/Shaft, A750/A761 Direct Clutch Hub (36 Teeth Hub)(9 Slots)(6 7/8”Tall) 2003-Up	1	
117576A	Hub W/Sun Gear, A750 Reverse Clutch Hub (40 Teeth Sun Gear, No Groove)(5.085”Tall) (10 Slots) 2003-Up	1	
117576B	Hub W/Sun Gear, A761 Reverse Clutch Hub (43 Teeth Sun Gear, 1 Groove)(5.085”Tall)(10 Slots) 2004-Up	1	
117579A	Hub, A750/A761 B1 Clutch (40 Teeth Hub)(3.197”OD Of Inner Race) 2003-Up	1	
117580A	Center Planet, A750 (Steel)(4 Gear, No Groove)(Uses A 30 Teeth Sun Gear # 610) 2003-Up	1	
117580B	Center Planet, A761 (Steel)(4 Gear, 1 Wide Groove)(Uses A 33 Teeth Sun Gear # 610) 2004-Up	1	
117582A	Planet, A750/A761 Front (Aluminum) (6 Gear)(1 Wide Groove On Each Gear) 2003-Up (Fits 40 Teeth & 43 Teeth Sun Gear # 576)	1	
117584A	Rear Planet, A750 2wd (4 Gear) (Uses A 25 Teeth Sun Gear # 674)(13” Overall Length) 2003-Up	1	
117584AC	Rear Planet, A750 4X4 (4 Gear) (Uses A 25 Teeth Sun Gear # 674)(6 1/4” Overall Length) 2003-Up	1	
117584AD	Rear Planet, A750 4x4 (4 Gear)(Uses A 25 Teeth Sun Gear #674)(9 1/8” Overall Length)	1	
117584B	Rear Planet, A761 2wd (4 Gear) (Uses A 27 Teeth Sun Gear # 674)(11 1/4” Overall Length) (Bolt-On Yoke) 2004-Up	1	
117590A	Ring Gear, A750 Center Planet (91 Outer Teeth)(40 Clutch Splines)(77 Inner Teeth) 2003-Up	1	
117590B	Ring Gear, A761 Center Planet (16 Outer Lugs)(40 Clutch Splines)(78 Inner Teeth) 2004-Up	1	
117592A	Ring Gear, A750 Front Planet (91 Teeth)(No Lugs)(10 Holes) 2003-Up	1	
117592B	Ring Gear, A761 Front Planet (91 Teeth)(16 Lugs)(8 Holes) 2004-Up	1	
117594A	Ring Gear, A750 Rear Planet (63 Inner Teeth)(48 Outer Clutch Splines)(1.638”Thick) 2003-Up	1	
117594B	Ring Gear, A761 Rear Planet (62 Inner Teeth)(48 Outer Clutch Splines)(1.640”Thick) 2004-Up	1	
117602A	Hub, A750 Front Planet Ring Gear (91 Teeth)(8 Holes) 2003-Up	1	
117602B	Hub, A761 Front Planet Ring Gear (16 Lugs)(8 Holes) 2004-Up	1	
117604A	Hub, A750 Rear Planet Ring Gear (63 Outer Ring Gear Teeth)(1.975”Tall) 2003-Up	1	
117604B	Hub, A761 Rear Planet Ring Gear (62 Outer Ring Gear Teeth)(1.975”Tall) 2004-Up	1	
117610A	Sun Gear, A750 Center Planet (30 Teeth, No Groove) 2003-Up	1	
117610B	Sun Gear, A761 Center Planet (33 Teeth, 1 Wide Groove) 2004-Up	1	
117632A	Center Support, A750/A761 (Aluminum)(20 Outer Lugs, 16 Inner Lugs)(1.280”Thick) 2003-Up	1	
117638A	Anti Rattle Spring, A750/A761 B-1/B-2/Low/Reverse Clutch Steels (.012”Thick, .535”Wide, 4.310”Long) 2003-Up	1	

PART #	SPRAGS	QTY	REFERENCE #
117640B	Sprag Assembly, A761 # 4 Sprag (27 Elements)(4 Pieces) 2004-Up	1	
117642A	Sprag Assembly, A750/A761 # 2 Sprag (25 Elements)(4 Pieces) 2003-Up	1	

© Whatever It Takes Transmission Parts. Inc.

117644A	Sprag Assembly, A750/A761 # 3 Sprag (18 Elements)(4 Pieces) 2003-Up (Does Not Include The Inner Race # 579)	1
117650B	Sprag, A761 # 4 (27 Elements) (.453"Thick)(Metal Cage) 2004-Up	1
117652A	Sprag, A750/A761 # 2 Sprag (25 Elements)(.445"Thick) 2003-Up	1
117654A	Sprag, A750/A761 # 3 Sprag (18 Elements)(.555"Thick) 2003-Up	1
117658A	Sprag, A750/A761 Low/Reverse (26 Elements W/2 Brass Caps)(1.110"Wide W/Caps, 3.725"OD) 2003-Up	1
117661B	Outer Race, A761 # 4 Sprag (30 Outer Splines) 2004-Up	1
117663A	Outer Race, A750/A761 # 2 Sprag (40 Clutch Splines)(.880"Thick, 5.085"OD, 2.945"ID) 2003-Up	1
117665A	Outer Race, A750/A761 # 3 Sprag (16 Lugs)(.790"Thick, 3.945"ID) 2003-Up	1
117668A	Inner Race, A750/A761 Low/Reverse Sprag (1.275"Thick, 2.992"OD) 2003-Up	1
117669A	Outer Race, A750/A761 Low/Reverse Sprag (18 Lugs)(1.340"Thick, 3.740"ID) 2003-Up	1

PART #	HARDPARTS (Continued)	QTY	REFERENCE #
117674A	Intermediate Shaft W/Sun Gear, A750 (27 Teeth Sun Gear, 1.725"OD)(11 5/8"Long) 2003-Up	1	
117674B	Intermediate Shaft W/Sun Gear, A761 (27 Teeth Sun Gear, 1.855"OD)(11 5/8"Long) 2004-Up	1	
117698A	Oil Deflector, A750 (4X4) Output Shaft To Ball Bearing # 271 (Metal)(2.660"OD, 1.740"ID) (W/Bonded Edge) 2003-Up	1	
117740A	Valve Body, A750 With 7 Solenoids (Cast # 89010) 2003-Up	1	
117740AA	Valve Body, A750 With 7 Solenoids (Cast # 8850) 2003-Up	1	
117740AAB	Valve Body, A750 With 6 Solenoids (Cast # 8850) 2003-Up	1	
117740AAC	Valve Body, A750 With 7 Solenoids (Cast # 8850)(4 Linear Solenoids Are 1.110"OD)(S1 Solenoid Has Gray Connector) 2003-Up	1	
117740AAD	Valve Body, A750 With 7 Solenoids (Cast # 8850)(4 Linear Solenoids Are 1.110"OD)(S1 Solenoid Has Brown Connector) 2003-Up	1	
117740AB	Valve Body, A750 With 6 Solenoids (Cast # 89010) 2003-Up	1	
117740B	Valve Body, A761 With 9 Solenoids (Cast # 8870) 2004-Up	1	
117740BA	Valve Body, A761 With 9 Solenoids (Cast # 89010) 2004-Up	1	

PART #	VALVE BODY COMPONENTS	QTY	REFERENCE #
A117741APK	Valve Kit, A750/A760/A761 Main Boost Bushing (Transgo)	1	
S117741B-6K	Plug Kit, A760E/A761E End (O-Ringed)(Sonnax)	1	
S117741BGK	Valve Kit, A760E/A761E Clutch control (Oversized)(Sonnax)(Requires T-F-147741-TL14 And T-VB-Fix)	1	
S117741BHK	Pistons, A760E/A761E B2 Accumulator (Oversized)(Sonnax)(Requires T-F-147741-TL13 And T-VB-Fix)	1	
S117741EK	Plunger Kit, A750E/A750F B1 Apply Control (Contains: Valve And Sleeve)	1	
T-F-147741-TL13	Tool Kit, For S117741BHK	1	
S117741ZK	Zip Kit, A750E/A750F/A760EA760H/A761E 2003-Up (Sonnax)	1	

PART #	HARDPARTS (Continued)	QTY	REFERENCE #
117750A	Bell Housing, A750 (Starter At 12:00)(10 Bolts To Case)(5 3/4"Thick)(W/2 Bosses At 7:00) 2003-Up	1	
117750AA	Bell Housing, A750 (Starter At 9:00)(8 Bolts To Case)(5 7/8"Thick) 2003-Up	1	
117750B	Bell Housing, A761 (Starter At 12:00)(10 Bolts To Case)(5 3/4"Thick)(W/2 Threaded Bosses At 6:00) 2004-Up	1	
117760A	Case, A750 (Cast # 89010)(Input Sensor On Drivers Side)(Output Sensor On Passengers Side) 2003-Up	1	
117760B	Case, A761 (Cast # 88701)(Input Sensor On Passengers Side)(Output Sensor On Drivers Side) 2004-Up	1	
117761-4B	Cover, A761 Side Case (Black Plastic)(2 Bolt) 2004-Up	1	
97761C	Check Ball Capsule, A750/A761 W/Spring (In Case Under VB)(Plastic Housing) 2003-Up	1	
117765A	Pan, A750 2wd/4X4 Bottom (Drain Plug On Drivers Side Rear)(3.640" Deep) 2003-Up	1	
117765B	Pan, A761 2wd Bottom (Drain Plug On Passengers Side Rear)(2.650" Deep) 2004-Up	1	
117770A	Extension Housing, A750 (2wd) 8 3/4" Long (6 Bolts To Case)(4 Bolt Bottom Mount) 2003-Up	1	
117770AC	Extension Housing, A750 (4X4) 5 1/2" Long (8 Bolts To Case)(4 Bolt Bottom Mount)(8 Bolts To Transfer Case) 2003-Up	1	
117770B	Extension Housing, A761 (2wd) 3 7/8" Long (Bolt-On Type Yoke)(6 BoltsTo Case)(4 Bolt Bottom Mount)(Cast # 8870) 2004-Up	1	
117776AK	Bolt Set, A750/A761 Bell Housing To Case (10 Pieces) 2003-Up	1	
117777AK	Bolt Set, A750/A761 Stator To Case (10 Pieces) 2003-Up	1	
117778AK	Bolt Set, A750/A761 Stator To Body (14 Pieces) 2003-Up	1	
117779AK	Bolt Set, A750/A761 Pan To Case (20 Pieces) 2003-Up	1	
117781ACK	Bolt Set, A750 (4X4) Extension Housing To Case (8 Pieces) 2003-Up	1	
117781AK	Bolt Set, A750 (2wd) Extension Housing To Case (6 Pieces) 2003-Up	1	
117781BK	Bolt Set, A761 (2wd) Extension Housing To Case (6 Pieces) 2004-Up	1	

© Whatever It Takes Transmission Parts. Inc.

PART #	HARDPARTS (Continued)	QTY	REFERENCE #
117782AK	Bolt Set, A750 Valve Body To Case (20 Pieces) 2003-Up	1	
117782BK	Bolt Set, A761 Valve Body To Case (20 Pieces) 2004-Up	1	
117797-1A	Nut, A750/A761 Holds Neutral Safety Switch To Manual Shaft (22mm) 2003-Up	1	
117797A	Nut, A750/A761 Holds Manual Lever To Shaft 2003-Up	1	
117798B	Nut, A761 (2wd) Bolt-On Yoke (30MM, 6 Point) 2004-Up	1	
117841B	Yoke, A761 (2wd)(Bolt-On Type) (1.662"OD At Seal)(3 Hole) 2004-Up	1	
117854A	Cushion, A750/A761 Reverse Clutch (.058"Thick)(4 Teeth)(Beveled) 2003-Up	1	
117861A	Snap Ring, A750/A761 Holds B-2 Clutch Pressure Plate In Case (.064"Thick, 6 3/16"OD) 2003-Up	1	
117864B	Snap Ring, A761 Holds Coast Clutch Pressure Plate In (.064"Thick, 4.780"OD) 2004-Up	1	
117868A	Snap Ring, A750/A761 Holds Hub & Center Planet Ring Gear To Front Planet Ring Gear (.056"Thick, 5.033"OD) 2003-Up	1	
117871A	Snap Ring, A750/A761 Holds Spring Retainer In Case (.054"Thick, 6 11/16"OD) 2003-Up	1	
117872A	Snap Ring, A750/A761 Holds 2nd Brake Pressure Plate In Case (.117"Thick, 6 7/8"OD) 2003-Up	1	
117874A	Snap Ring, A750/A761 Holds 2nd Brake Clutch Spring Retainer In (.055"Thick, 5.270"OD) 2003-Up	1	
117876A	Snap Ring, A750/A761 Holds Forward Clutch Pressure Plate In Drum (.062"Thick, 5.010"OD) 2003-Up	1	
117877A	Snap Ring, A750/A761 Holds Forward Clutch Spring Retainer In (.055"Thick, 1.755"OD) 2003-Up	1	
117878A	Snap Ring, A750/A761 Holds Direct Clutch Pressure Plate In Drum (.063"Thick, 6 3/4"OD) 2003-Up (Also Fits A750/A761 Is A Stop For Reverse Clutch Pressure Plate # 150 2003-Up)	2	
117879A	Snap Ring, A750/A761 Holds Direct Clutch Retainer In (.040"Thick, 2.805"OD) 2003-Up	1	
117883A	Snap Ring, A750/A761 Holds Center Support In The Case (.118"Thick, 7 1/4"OD)(Beveled, W/2 Eyelets) 2003-Up	1	
117884A	Snap Ring, A750/A761 Holds Low/Reverse Clutch Return Spring In Case (.032"Thick, 2.725"OD) 2003-Up	1	
117886B	Snap Ring, A761 Holds Sprag Element To Outer Race (.031"Thick, 3.600"OD) 2004-Up	2	
117887A	Snap Ring, A750/A761 Holds # 3 Sprag In Outer Race (.038"Thick, 4.260"OD) 2003-Up	1	
117889A	Snap Ring, A750/A761 Holds Rear Planet Ring Gear To Hub (.055"Thick, 4.655"OD) 2003-Up	1	
117890A	Snap Ring, A750/A761 Holds Low/Reverse Sprag Outer Race In Case (.118"Thick, 6 3/8"OD) (W/2 Eyelets) 2003-Up	1	
117891A	Snap Ring, A750/A761 Goes In Reverse Clutch Piston, Holds Reverse Clutch In The Direct Drum (.063"Thick, 7 1/4"OD) 2003-Up	1	
117893A	Snap Ring, A750/A761 Holds Reverse Clutch Piston & Housing To Direct Drum (.048"Thick, 3.365"OD) 2003-Up	1	
117897A	Snap Ring, A750/A761 (2wd) Output Shaft (Rear)(.118"Thick, 1.560"OD) 2003-Up	1	
117898A	Snap Ring, A750 (4X4) Holds Ball Bearing # 271 To Extension Housing (.058"Thick, 2.830"OD) (W/2 Eyelets) 2003-Up	1	
117925A	Accumulator Assembly, A750 C1 (Aluminum Piston .983"OD)(Outer Spring Is Green .650"OD, 1.935"Long)(Inner Spring Is Pink .447"OD, 1.185"Long) 2003-Up	1	
117925B	Accumulator Assembly, A761 C1 (Aluminum Piston .983"OD)(Outer Spring Is Natural .670"OD, 1.810"Long)(Inner Spring Is Natural .447"OD, 1.755"Long) 2004-Up	1	
S167932AK	Accumulator Piston Assembly, A750/A761 (In Valve Body)(Contains: 1 Piston & 2 O-Rings) (Sonnax) 2003-Up	1	
117935A	Accumulator Assembly, A750 C2 (Aluminum Piston 2.060"Long, .715"ID W/2 O-Rings W/Green Balance Spring)(Return Spring Is White .630"OD, 2.435"Long) 2003-Up	1	
117935B	Accumulator Assembly, A761 C2 (Plastic Piston 2.060"Long, .715"ID, W/2 O-Rings W/White Balance Spring)(Return Spring Is White .630"OD, 2.495"Long) 2004-Up	1	
117945A	Accumulator Assembly, A750 C3 (Aluminum Piston 2.175"Long, .885"ID, W/2 O-Rings W/Green Balance Spring)(Outer Spring Is Red .780"OD, 2.873"Long)(Inner Spring Is Green .550"OD, 1.732"Long) 2003-Up	1	
117945B	Accumulator Assembly, A761 C3 (Plastic Piston 2.175"Long, .875"ID, W/2 O-Rings W/Pink Balance Spring)(Outer Spring Is Green .780"OD, 3.000"Long)(Inner Spring Is Green .550"OD, 1.732"Long) 2004-Up	1	
117950A	Accumulator Assembly, A750 B3 (Aluminum Piston 2.600"Long, .870"ID, W/2 O-Rings W/Natural Balance Spring)(Return Spring Is Purple .770"OD, 2.780"Long) 2003-Up	1	
117950B	Accumulator Assembly, A761 B3 (Plastic Piston 2.600"Long, .850"ID, W/2 O-Rings W/White Balance Spring)(Return Spring Is Red .770"OD, 2.526"Long) 2004-Up	1	
117957A	Housing, A750/A761 Reverse Clutch Piston (Aluminum)(6 3/16"OD, 3.335"ID) 2003-Up	1	
117960A	Piston, A750 B-2 Clutch (Aluminum) (.570"Thick, 5.680"OD, 4.565"ID) 2003-Up	1	
117960B	Piston, A761 B-2 Clutch (Aluminum) (.440"Thick, 5.680"OD, 4.565"ID) 2004-Up	1	
117962A	Piston, A750/A761 2nd Brake Clutch (Aluminum)(24 Spring Pockets)(6 1/4"OD, 5.330"ID) (8 Legs) 2003-Up	1	
117964A	Piston, A750 Forward Clutch (Aluminum) (1.500"Thick, 4.850"OD, 1.565"ID)(24 Lugs) 2003-Up	1	
117964B	Piston, A761 Coast Clutch (Bonded) (1.270"Thick, 4.790"OD, 1.550"OD)(4 Outer Lugs) 2004-Up	1	

© Whatever It Takes Transmission Parts. Inc.

117965A.....Piston, A750 Direct Clutch (Aluminum) (.875”Thick From Front To Where Steel Plate Sets) .....(6 3/8”OD) 2003-Up .....1 .....
117965B .....Piston, A761 Direct Clutch (Aluminum) (1.020”Thick From Front To Where Steel Plate Sets) .....(6 3/8”OD) 2004-Up .....1 .....

117966A.....Piston, A750/A761 Reverse Clutch (4.405”Tall, 7 1/16”OD, 4.326”ID)(Fits 24 Teeth Steels) .....2003-Up .....1 .....
117967-1A .....Balance Piston Housing, A750 Low/Reverse Clutch (Aluminum)(.640”Thick, 5.360”OD, 3.100”ID) .....2003-Up .....1 .....
117967-1B .....Balance Piston Housing, A761 Low/Reverse Clutch (Aluminum)(.640”Thick, 4.735”OD, 3.100”ID) .....2004-Up .....1 .....
117967-2A .....Balnce Piston, A750 Low/Reverse Clutch (Aluminum)(.610”Thick, 4.935”OD, 2.650”ID) 2003-Up 1 .....
117967-2B .....Balance Piston, A761 Low/Reverse Clutch (Aluminum)(.540”Thick, 4.367”OD, 2.650”ID) .....2004-Up .....1 .....
117967A.....Piston, A750 Low/Reverse Clutch (Aluminum) (2.055”Thick, 5.565”OD, 2.650”ID) 2003-Up .....1 .....
117967B .....Piston, A761 Low/Reverse Clutch (Aluminum) (1.685”Thick, 5.565”OD, 2.650”ID) 2004-Up .....1 .....
117969A.....Piston, A750/A761 B-1 Clutch (Aluminum)(1.375”Thick, 5.970”OD, 4.970”ID) 2003-Up .....1 .....
117969AA.....Piston, A750 B-1 Clutch (Aluminum) (1.200”Thick, 5.970”OD, 4.970”ID) 2003-Up .....1 .....
117970A.....Springs W/Retainer, A750 B-2 Clutch Return (12 Springs)(.780”Thick, 4.650”ID) 2003-Up .....1 .....
117970B .....Springs W/Retainer, A761 B-2 Clutch Return (12 Springs)(1.000”Thick, 4.650”ID) 2004-Up .....1 .....
117972A.....Springs W/Retainer, A750/A761 2nd Brake Clutch Return (24 Springs)(6 1/4”OD, 5.194”ID) .....2003-Up .....1 .....
117974A.....Springs W/Retainer, A750 Forward Clutch Return (18 Springs)(1.055”Thick, 3.255”OD) .....2003-Up .....1 .....
117974B .....Springs W/Retainer, A761 Coast/Forward Clutch Return (20 Springs)(.965”Thick, 3.305”OD) .....2004-Up .....1 .....
117975A.....Springs W/Retainer, A750/A761 Direct Clutch Return (32 Springs)(.775”Thick, 4.930”OD, 3.895”ID) .....2003-Up .....1 .....
117976A.....Springs W/Retainer, A750/A761 Reverse Clutch Return (30 Springs)(5.490”OD, 4.525”ID) .....2003-Up .....1 .....
117977A.....Springs W/Retainer, A750/A761 Low/Reverse Clutch Return (20 Springs)(.930”Thick, 3.855”OD) .....2003-Up .....1 .....
117979A.....Springs W/Retainer, A750/A761 B-1 Clutch Return (16 Springs)(.710”Thick, 6 1/4”OD) 2003-Up 1 .....
117984A.....Retainer, A750 Forward Clutch Spring (Aluminum)(18 Spring Pockets)(1.165”Thick, 4.475”OD) .....2003-Up .....1 .....
117984B .....Retainer, A761 Coast/Forward Clutch Spring (Aluminum)(20 Spring Pockets)(1.405”Thick, ...4.270”OD) 2004-Up .....1 .....
117985A.....Piston/Retainer, A750/A761 Direct Clutch (Bonded)(5.180”OD, 2.665”ID) 2003-Up .....1 .....
67991S .....Sleeve, A750/A761 Holds Pin On Linkage Shaft 2003-Up.....1 .....
117991-3A .....Rooster Comb, A750 (6 Detents) (Cast # B2) 2003-Up.....1 .....
117991-3B .....Rooster Comb, A761 (5 Detents) (Cast # B4) 2004-Up.....1 .....
117991-4A .....Manual Rod, A750 (11” Long) (W/Flats On Both Ends) 2003-Up .....1 .....
117991-4B .....Manual Rod, A761 (10 1/2”Long) (W/Flats On 1 End) 2004-Up .....1 .....
117992A.....Manual Lever, A750 (External) (3” Long)(Cast # 35573 60020) 2003-Up.....1 .....
117992B .....Manual Lever, A761 (External)(4 1/2”Long)(Cast # 35572 90070) 2004-Up.....1 .....
117994A.....Park Rod Actuator, A750 (11” Long)(Ball Is 8” From End)(W/White Spring) 2003-Up .....1 .....
117994B .....Park Rod Actuator, A761 (11” Long)(Ball Is 7 3/4” From End)(W/Green Spring) 2004-Up .....1 .....
117995A.....Park Pawl Assembly, A750 (Park Pawl Is .484”Thick, 4.950”Long)(4 Pieces) 2003-Up .....1 .....
117995B .....Park Pawl Assembly, A761 (Park Pawl Is .384”Thick, 5.175”Long)(4 Pieces) 2004-Up .....1 .....
97996A .....Fitting, A750/A761 2wd Top & Bottom (Also A750 4X4 Bottom) Cooler Line (Elbow)(2” Tall).....1 .....
97996AA.....Fitting, A750 4x4 Top Fitting (Cooler Line) (Elbow)(W/Small Threaded Hole On Top).....1 .....

© Whatever It Takes Transmission Parts. Inc.

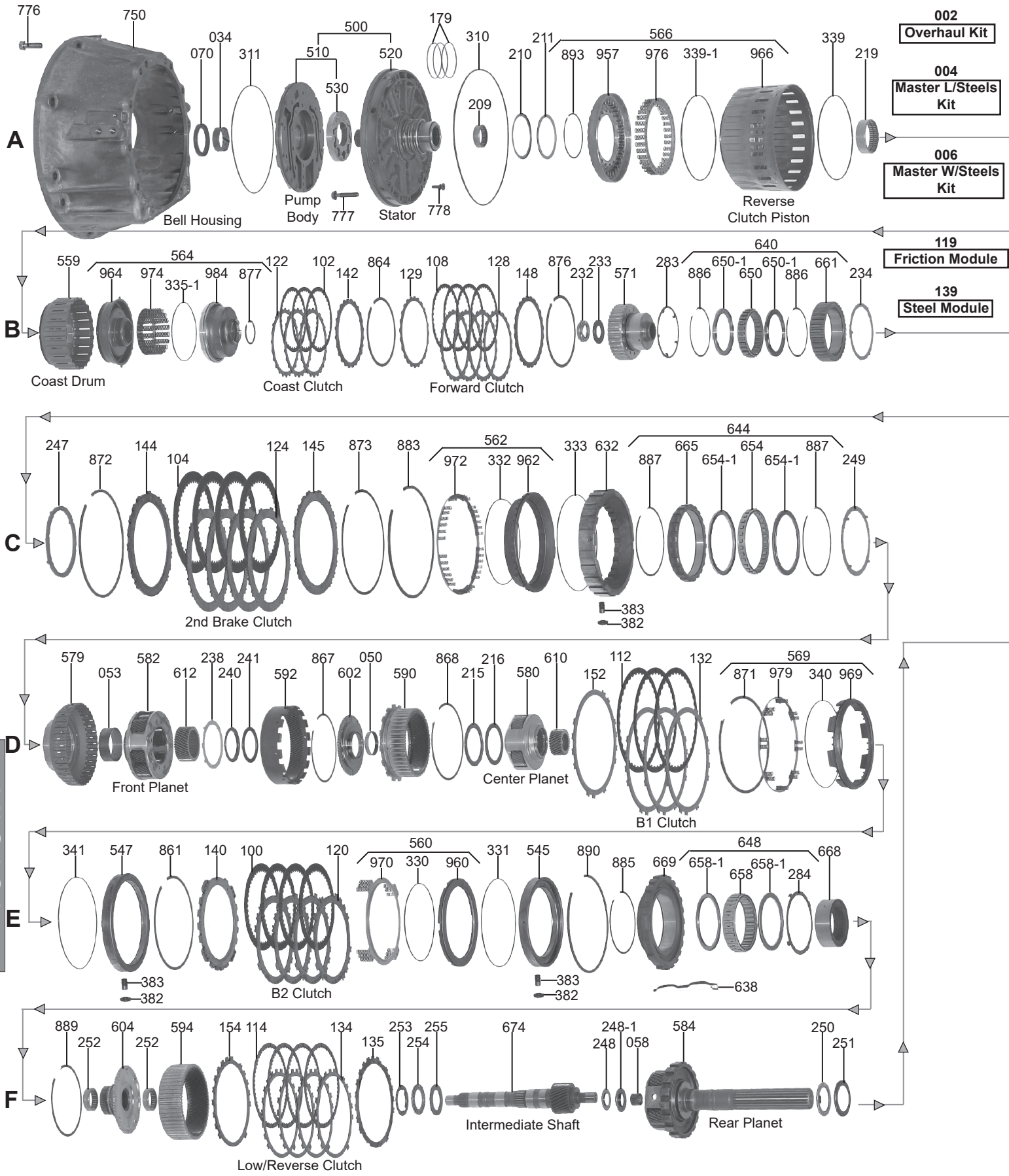
776
750
034
070
311
500
510
520
530
179
310
209
210
211
566
893
957
976
339-1
966
339
219
Bell Housing
Pump Body
777
Stator
778
Reverse Clutch Piston
A
002
Overhaul Kit
004
Master L/Steels Kit
006
Master W/Steels Kit
559
564
964
974
335-1
984
877
122
102
142
864
129
108
128
148
876
232
233
571
283
640
650-1
650-1
661
886
650
886
234
Coast Drum
Coast Clutch
Forward Clutch
B
119
Friction Module
139
Steel Module
247
872
144
104
124
145
873
883
562
972
332
962
333
632
644
887
665
654
654-1
654-1
887
249
2nd Brake Clutch
383
382
C
579
053
582
612
238
240
241
592
867
602
050
590
868
215
216
580
610
152
112
132
569
871
979
340
969
Front Planet
Center Planet
B1 Clutch
D
341
547
861
140
100
120
560
970
330
960
331
545
890
885
669
648
658-1
658
658-1
284
668
383
382
B2 Clutch
383
382
638
E
889
252
604
252
594
154
114
134
135
253
254
255
674
248-1
248
058
584
250
251
Low/Reverse Clutch
Intermediate Shaft
Rear Planet
F

TOYOTA

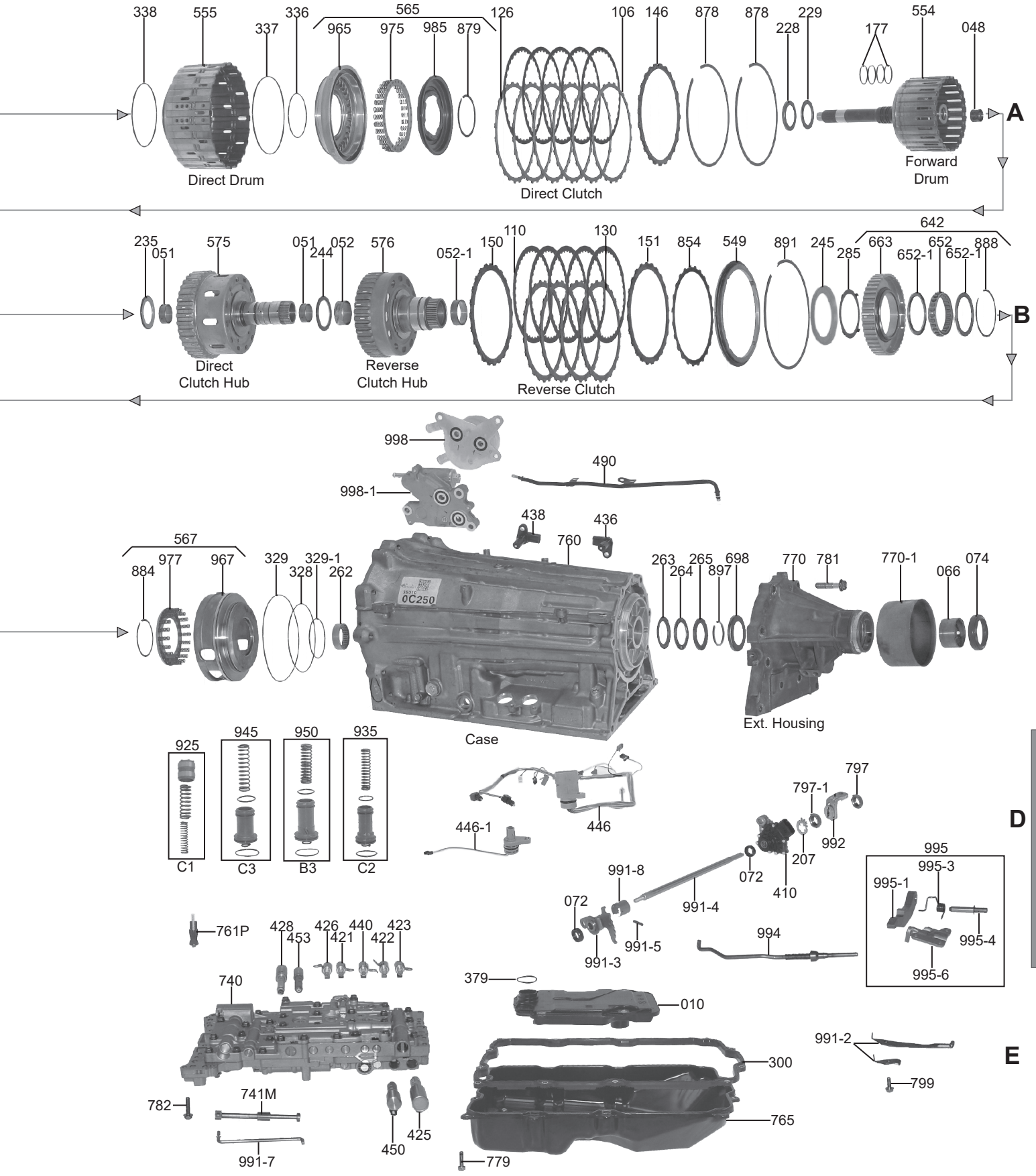

TOYOTA

1-800-940-0197

© Whatever It Takes Transmission Parts. Inc.

PART #	OVERHAUL KITS	QTY	REFERENCE #
77002AW	Overhaul Kit, AB60E/AB60F (W/Rubber Molded Pan Gasket) 2007-Up (For Bonded Pistons Sell A77960AK)	1	

PART #	MASTER L/STEELS KIT	QTY	REFERENCE #
77004AW	Master L/Steels Kit, AB60E/AB60F (W/Molded Rubber Pan Gasket) 2007-Up (For Bonded Pistons Sell A77960AK)	1	

PART #	MASTER W/STEELS KIT	QTY	REFERENCE #
77006AW	Master W/Steels Kit, AB60E/AB60F (W/Molded Rubber Pan Gasket) 2007-Up (For Bonded Pistons Sell A77960AK)	1	

PART #	FILTERS	QTY	REFERENCE #
77010A	Filter, AB60E/AB60F (4 Bolt)(W/1" Oval Pick-Up Tube) 2007-Up		35330-34010

PART #	BUSHINGS	QTY	REFERENCE #
77030A	Bushing Kit, AB60E/AB60F 2007-Up (9 Bushings)	1	
77034A	Bushing, AB60E/AB60F Pump Body (.715"Thick)(1.775"ID)(W/Oil Pockets) 2007-Up	1	
77036A	Bushing, AB60E/AB60F Stator (Front) (.705"Thick)(1.020"ID) 2007-Up	1	
77048A	Bushing, AB60E/AB60F Forward Drum (Rear)(.598"Thick)(.787"ID) 2007-Up	1	
77050A	Bushing, AB60E/AB60F Center Planet Ring Gear Hub (.309"Thick)(1.870"ID) 2007-Up	1	
77051A	Bushing, AB60E/AB60F Direct Clutch Hub (.670"Thick)(1.886"ID) 2007-Up	2	
77052A	Bushing, AB60E/AB60F Reverse Clutch Hub (Front)(.660"Thick)(1.649"ID) 2007-Up	1	
77052-1A	Bushing, AB60E/AB60F Reverse Clutch Hub (Rear)(.436"Thick)(1.649"ID) 2007-Up	1	
77053A	Bushing, AB60E/AB60F Front Planet (.980"Thick)(2.401"ID) 2007-Up	1	
77058A	Bushing, AB60E/AB60F Rear Planet (Front)(.687"Thick)(.788"ID) 2007-Up	1	
77066A	Bushing, AB60E (2wd) Extention Housing (1.172"Thick)(1.925"ID) 2007-Up	1	

PART #	METAL CLAD SEALS	QTY	REFERENCE #
77070A	Seal, AB60E/AB60F Front Pump (2.445"OD) 2007-Up	1	90311-45032
77072A	Seal, AB60E/AB60F Manual Shaft (.276"Thick)(.872"OD) 2007-Up	1	90311-12002
77074A	Seal, AB60E (2wd) Extention Housing (2.520"OD) 2007-Up	1	90311-49006

PART #	FRICTIONS	QTY	REFERENCE #
77100A	Friction, AB60E/AB60F B-2 Clutch (.061") (47 Teeth)(6 1/2"OD) 2007-Up	4	35682-34020
77102A	Friction, AB60E/AB60F Coast Clutch (.059") (36 Teeth)(4.810"OD) 2007-Up	4	35685-0C010
77104A	Friction, AB60E/AB60F 2nd Brake Clutch (.072")(46 Teeth)(7 1/2"OD) 2007-Up	4	
77106A	Friction, AB60E/AB60F Direct Clutch (.059") (36 Teeth)(7"OD) 2007-Up	5	35667-0C020
77108A	Friction, AB60E/AB60F Forward Clutch (.059") (36 Teeth)(5.016"OD) 2007-Up	5	35633-0C020
77110A	Friction, AB60E/AB60F Reverse Clutch (.059") (40 Teeth)(7"OD) 2007-Up	5	35648-0C020
77112A	Friction, AB60E/AB60F B-1 Clutch (.073") (40 Teeth)(7 3/8"OD) 2007-Up	4	35681-34020
77114A	Friction, AB60E/AB60F Low/Reverse Clutch (.061")(57 Teeth)(6 1/4"OD) 2007-Up	7	35684-34020
77119A	Friction Module, AB60E/AB60F 2007-Up	1	

PART #	STEELS	QTY	REFERENCE #
77120A	Steel, AB60E/AB60F B-2 Clutch (.087") (13 Teeth)(5.420"ID) 2007-Up	4	35692-0C020
77122A	Steel, AB60E/AB60F Coast Clutch (.070") (24 Teeth)(4.277"ID) 2007-Up	4	35695-0C010
77124A	Steel, AB60E/AB60F 2nd Brake Clutch (.096")(15 Teeth)(6.178"ID) 2007-Up	3	
77126A	Steel, AB60E/AB60F Direct Clutch (.070")(24 Teeth)(6 1/2"OD) 2007-Up	5	35647-0C020
77128A	Steel, AB60E/AB60F Forward Clutch (.070")(24 Teeth)(4.492"ID) 2007-Up	5	35634-0C030
77129A	Steel, AB60E/AB60F Forward Clutch (.069")(24 Teeth)(4.512"ID)(Dished) 2007-Up	5	35672-34030
77130A	Steel, AB60E/AB60F Reverse Clutch (.095") (24 Teeth)(6 1/4"ID) 2007-Up	4	35677-0C020
77132A	Steel, AB60E/AB60F B-1 Clutch (.095") (13 Teeth)(6 1/2"OD) 2007-Up	4	35691-0C030
77134A	Steel, AB60E/AB60F Low/Reverse Clutch (.079")(16 Teeth)(5.710"ID) 2007-Up	6	35694-0C020
77135A	Steel, AB60E/AB60F Low/Reverse Clutch (.078")(17 Teeth)(W/2 Notches)(5.706"ID)(Dished) 2007-Up	6	23689-0C100
77139A	Steel Module, AB60E/AB60F 2007-Up	1	

PART #	PRESSURE PLATES	QTY	REFERENCE #
77140AA	Pressure Plate, AB60E/AB60F B-2 Clutch (.078")(13 Teeth)(W/4 Wide Teeth W/Spring Pockets) (5.420"ID) 2007-Up	1	35678-0C030

TOYOTA

© Whatever It Takes Transmission Parts. Inc.

77142AA.....Pressure Plate, AB60E/AB60F Coast Clutch (.118")(24 Teeth)(4.277"ID) 2007-Up.....1 .....35675-0C010
77142AB.....Pressure Plate, AB60E/AB60F Coast Clutch (.122")(24 Teeth)(4.277"ID) 2007-Up .....1 .....35675-0C020
77142AC.....Pressure Plate, AB60E/AB60F Coast Clutch (.126")(24 Teeth)(4.277"ID) 2007-Up .....1 .....35675-0C030
77142AD.....Pressure Plate, AB60E/AB60F Coast Clutch (.130")(24 Teeth)(4.277"ID) 2007-Up .....1 .....35675-0C040
77142AE.....Pressure Plate, AB60E/AB60F Coast Clutch (.134")(24 Teeth)(4.277"ID) 2007-Up .....1 .....35675-0C050
77142AF .....Pressure Plate, AB60E/AB60F Coast Clutch (.138")(24 Teeth)(4.277"ID) 2007-Up .....1 .....35675-0C060
77142AG .....Pressure Plate, AB60E/AB60F Coast Clutch (.142")(24 Teeth)(4.277"ID) 2007-Up .....1 .....35675-0C070
77142AH.....Pressure Plate, AB60E/AB60F Coast Clutch (.146")(24 Teeth)(4.277"ID) 2007-Up .....1 .....35675-0C080
77142AJ .....Pressure Plate, AB60E/AB60F Coast Clutch (.150")(24 Teeth)(4.277"ID) 2007-Up .....1 .....35675-0C090
77142AK.....Pressure Plate, AB60E/AB60F Coast Clutch (.154")(24 Teeth)(4.277"ID) 2007-Up .....1 .....35675-0C100
77142AL .....Pressure Plate, AB60E/AB60F Coast Clutch (.158")(24 Teeth)(4.277"ID) 2007-Up .....1 .....35675-0C110
77144A .....Pressure Plate, AB60E/AB60F 2nd Brake Clutch (.176")(15 Teeth)(6.178"ID) 2007-Up .....1 .....35679-0C020
77145A .....Apply Plate, AB60E/AB60F 2nd Brake Clutch (.158")(15 Teeth)(6.178"ID) 2007-Up.....1 .....35679-0C030
77146AA.....Pressure Plate, AB60E/AB60F Direct Clutch (.138")(24 Teeth)(6 1/2"ID) 2007-Up .....1 .....35675-0C120
77146AB.....Pressure Plate, AB60E/AB60F Direct Clutch (.142")(24 Teeth)(6 1/2"ID) 2007-Up .....1 .....35675-0C130
77146AC.....Pressure Plate, AB60E/AB60F Direct Clutch (.146")(24 Teeth)(6 1/2"ID) 2007-Up .....1 .....35675-0C140
77146AD.....Pressure Plate, AB60E/AB60F Direct Clutch (.150")(24 Teeth)(6 1/2"ID) 2007-Up .....1 .....35675-0C150
77146AE.....Pressure Plate, AB60E/AB60F Direct Clutch (.154")(24 Teeth)(6 1/2"ID) 2007-Up .....1 .....35675-0C160
77146AF .....Pressure Plate, AB60E/AB60F Direct Clutch (.158")(24 Teeth)(6 1/2"ID) 2007-Up .....1 .....35675-OC170
77146AG .....Pressure Plate, AB60E/AB60F Direct Clutch (.162")(24 Teeth)(6 1/2"ID) 2007-Up .....1 .....35675-0C180
77146AH.....Pressure Plate, AB60E/AB60F Direct Clutch (.166")(24 Teeth)(6 1/2"ID) 2007-Up .....1 .....35675-0C190
77146AJ .....Pressure Plate, AB60E/AB60F Direct Clutch (.170")(24 Teeth)(6 1/2"ID) 2007-Up .....1 .....35675-0C200
77148AA.....Pressure Plate, AB60E/AB60F Forward Clutch (.118")(24 Teeth)(4.492"ID) 2007-Up.....1 .....35635-0C120
77148AB.....Pressure Plate, AB60E/AB60F Forward Clutch (.122")(24 Teeth)(4.492"ID) 2007-Up .....1 .....35635-0C130
77148AC.....Pressure Plate, AB60E/AB60F Forward Clutch (.126")(24 Teeth)(4.492"ID) 2007-Up .....1 .....35635-0C140
77148AD.....Pressure Plate, AB60E/AB60F Forward Clutch (.130")(24 Teeth)(4.492"ID) 2007-Up .....1 .....35635-0C150
77148AE.....Pressure Plate, AB60E/AB60F Forward Clutch (.134")(24 Teeth)(4.492"ID) 2007-Up .....1 .....35635-0C160
77148AF .....Pressure Plate, AB60E/AB60F Forward Clutch (.138")(24 Teeth)(4.492"ID) 2007-Up .....1 .....35635-0C170
77148AG .....Pressure Plate, AB60E/AB60F Forward Clutch (.142")(24 Teeth)(4.492"ID) 2007-Up .....1 .....35635-0C180
77148AH.....Pressure Plate, AB60E/AB60F Forward Clutch (.146")(24 Teeth)(4.492"ID) 2007-Up .....1 .....35635-0C190
77148AJ .....Pressure Plate, AB60E/AB60F Forward Clutch (.150")(24 Teeth)(4.492"ID) 2007-Up .....1 .....35635-0C200
77148AK.....Pressure Plate, AB60E/AB60F Forward Clutch (.154")(24 Teeth)(4.492"ID) 2007-Up .....1 .....35635-0C210
77148AL .....Pressure Plate, AB60E/AB60F Forward Clutch (.158")(24 Teeth)(4.492"ID) 2007-Up .....1 .....35635-0C220
77148AM .....Pressure Plate, AB60E/AB60F Forward Clutch (.162")(24 Teeth)(4.492"ID) 2007-Up .....1 .....35635-0C230
77150AA.....Pressure Plate, AB60E/AB60F Reverse Clutch (.094")(24 Teeth)(6 1/4"ID) 2007-Up .....1 .....35649-0C120
77150AB.....Pressure Plate, AB60E/AB60F Reverse Clutch (.098")(24 Teeth)(6 1/4"ID) 2007-Up .....1 .....35649-OC130
77150AC.....Pressure Plate, AB60E/AB60F Reverse Clutch (.102")(24 Teeth)(6 1/4"ID) 2007-Up .....1 .....35649-0C140
77150AD.....Pressure Plate, AB60E/AB60F Reverse Clutch (.106")(24 Teeth)(6 1/4"ID) 2007-Up .....1 .....35649-OC150
77150AE.....Pressure Plate, AB60E/AB60F Reverse Clutch (.110")(24 Teeth)(6 1/4"ID) 2007-Up.....1 .....35649-0C160
77150AF .....Pressure Plate, AB60E/AB60F Reverse Clutch (.114")(24 Teeth)(6 1/4"ID) 2007-Up.....1 .....34649-0C170
77150AG .....Pressure Plate, AB60E/AB60F Reverse Clutch (.118")(24 Teeth)(6 1/4"ID) 2007-Up
.....(Also Fits AB60E/AB60F # 151 2007-Up) ..... 1-2.....35649-0C180
77150AH.....Pressure Plate, AB60E/AB60F Reverse Clutch (.122")(24 Teeth)(6 1/4"ID) 2007-Up .....1 .....35649-OC190
77150AJ .....Pressure Plate, AB60E/AB60F Reverse Clutch (.126")(24 Teeth)(6 1/4"ID) 2007-Up .....1 .....35649-0C200
77150AK.....Pressure Plate, AB60E/AB60F Reverse Clutch (.130")(24 Teeth)(6 1/4"ID) 2007-Up .....1 .....35649-0C210
77150AL .....Pressure Plate, AB60E/AB60F Reverse Clutch (.134")(24 Teeth)(6 1/4"ID) 2007-Up .....1 .....35649-OC220
77150AM .....Pressure Plate, AB60E/AB60F Reverse Clutch (.138")(24 Teeth)(6 1/4"ID) 2007-Up .....1 .....35649-OC230
77151A .....Use 77150AG.....1 .....
77152AA.....Pressure Plate, AB60E/AB60F B-1 Clutch (.078")(13 Teeth)(6 1/2"OD) 2007-Up .....1 .....35676-0C090
77152AB.....Pressure Plate, AB60E/AB60F B-1 Clutch (.086")(13 Teeth)(6 1/2"OD) 2007-Up .....1 .....35676-0C100
77152AC.....Pressure Plate, AB60E/AB60F B-1 Clutch (.094")(13 Teeth)(6 1/2"OD) 2007-Up .....1 .....35676-OC110
77152AD.....Pressure Plate, AB60E/AB60F B-1 Clutch (.102")(13 Teeth)(6 1/2"OD) 2007-Up .....1 .....35676-0C120
77154AA.....Pressure Plate, AB60E/AB60F Low/Reverse Clutch (.070")(16 Teeth)(5.707"ID) 2007-Up.....1 .....35689-0C110
77154AB.....Pressure Plate, AB60E/AB60F Low/Reverse Clutch (.078")(16 Teeth)(5.707"ID) 2007-Up.....1 .....35689-0C120
77154AC.....Pressure Plate, AB60E/AB60F Low/Reverse Clutch (.086")(16 Teeth)(5.707"ID) 2007-Up.....1 .....35689-0C130
77154AD.....Pressure Plate, AB60E/AB60F Low/Reverse Clutch (.094")(16 Teeth)(5.707"ID) 2007-Up.....1 .....35689-0C140
77154AE.....Pressure Plate, AB60E/AB60F Low/Reverse Clutch (.102")(16 Teeth)(5.707"ID) 2007-Up.....1 .....35689-0C150
77154AF .....Pressure Plate, AB60E/AB60F Low/Reverse Clutch (.110")(16 Teeth)(5.707"ID) 2007-Up.....1 .....35689-0C160
77154AG .....Pressure Plate, AB60E/AB60F Low/Reverse Clutch (.118")(16 Teeth)(5.707"ID) 2007-Up.....1 .....35689-0C170

PART #	SEALING RINGS	QTY	REFERENCE #
77175A	Ring Kit, AB60E/AB60F 2007-11.....	1	

PART #	WASHERS & BEARINGS	QTY	REFERENCE #
77209A	Caged Needle Bearing, AB60E/AB60F Stator (Rear)(.628"Thick)(1.650"OD)(Cast # DB 79579)		
.....	2007-Up	1	
77210A	Race, AB60E/AB60F Stator To Reverse Clutch Piston (.031"Thick)(3.446"OD)(2.931"ID)		
.....	2007-Up	1	35786-0C010

TOYOTA

© Whatever It Takes Transmission Parts. Inc.

PART #	WASHERS & BEARINGS (Continued)	QTY	REFERENCE #
77211A	Bearing W/Race, AB60E/AB60F Stator To Reverse Clutch Piston (.110”Thick)(3.364”OD)(2.839”ID) 2007-Up	1	90374-A0001
77215A	Bearing W/Race, AB60E/AB60F Hub To Center Planet (.110”Thick)(3.372”OD)(2.575”ID) 2007-Up	1	90374-65002
77216A	Race, AB60E/AB60F Hub To Center Planet (.078”Thick)(3.244”OD)(2.482”ID) 2007-Up	1	35785-34010
77219A	Caged Needle Bearing, AB60E/AB60F Direct Drum (Front)(.740”Thick)(2.525”OD)(Cast # DB 78909) 2007-Up	1	
77228A	Race, AB60E/AB60F Stator To Forward Drum (2.126”OD)(1.499”ID) 2007-Up	1	35789-0C150
77229A	Bearing W/Race, AB60E/AB60F Stator To Forward Drum (.130”Thick)(2.088”OD)(1.445”ID) 2007-Up	1	96374-36005
77232A	Bearing W/Race, AB60E/AB60F Forward Clutch Drum To Coast Clutch Hub (.341”Thick)(1.565”OD)(.835”ID) 2007-Up	1	90374-A0014
77233A	Race, AB60E/AB60F Forward Clutch Drum To Coast Clutch Hub (.118”Thick)(1.759”OD)(.906”ID) 2007-Up	1	35789-0C160
77234A	Washer, AB60E/AB60F #4 Sprag Outer Race To Direct Clutch Hub (.066”Thick)(4.129”OD)(3.651”ID)(Plastic) 2007-Up	1	35614-34010
77235A	Bearing W/Races, AB60E/AB60F #4 Sprag To Direct Clutch Hub (.143”Thick)(2.385”OD)(1.562”ID) 2007-Up	1	90374-A0020
77238A	Washer, AB60E/AB60F Front Planet To Hub # 602 (.070”Thick)(3.722”OD)(3.040”ID)(4 Tabs)(Plastic) 2007-Up	1	35738-34010
77240A	Race, AB60E/AB60F Front Planet Sun Gear To Hub # 602 (.079”Thick)(2.717”OD)(2.170”ID) 2007-Up	1	35788-34010
77241A	Bearing W/Race, AB60E/AB60F Front Planet Sun Gear To Hub # 602 (.130”Thick)(2.764”OD)(2.155”ID) 2007-Up	1	90374-54004
77244A	Bearing W/Race, AB60E/AB60F Direct Clutch Hub To Reverse Clutch Hub (.140”Thick)(2.537”OD)(1.837”ID) 2007-Up	1	90374-A0013
77245A	Washer, AB60E/AB60F Reverse Clutch Hub To #2 Sprag (4 Tab)(Plastic, Dished) 2007-Up	1	35686-34010
77247A	Washer, AB60E/AB60F #2 Sprag To #3 Sprag (.213”Thick)(5.208”OD)(4.560”ID)(4 Tab)(Plastic) 2007-Up	1	35616-34010
77248-1A	Bearing W/Race, AB60E/AB60F Intermediate Shaft To Rear Planet (.149”Thick)(1.735”OD)(.913”ID) 2007-Up	1	
77248A	Race, AB60E/AB60F Intermediate Shaft To Rear Planet (.030”Thick)(1.574”OD)(.835”ID) 2007-Up	1	
77249A	Washer, AB60E/AB60F #3 Sprag To B-1 Clutch Hub (.059”Thick)(5.154”OD)(4.437”ID)(4 Tab)(Plastic) 2007-Up	1	35737-34010
77250A	Bearing W/Race, AB60E/AB60F Rear Planet To Case (.129”Thick)(2.484”OD)(1.725”ID) 2007-Up	1	35779-0C020
77251A	Race, AB60E/AB60F Rear Planet To Case (Cupped)(2.650”OD)(1.862”ID) 2007-Up	1	90374-A0017
77252A	Caged Needle Bearing, AB60E/AB60F Rear Ring Gear Support (.475”Thick)(1.628”OD)(Cast # DB 78340) 2007-Up	2	
77253A	Race, AB60E/AB60F Rear Planet Ring Gear Hub To Intermediate Shaft (.030”Thick)(2.247”OD)(1.558”ID) 2007-Up	1	35777-0C020
77254A	Bearing, AB60E/AB60F Rear Planet Ring Gear Hub To Intermediate Shaft (.176”Thick)(2.244”OD)(1.435”ID) 2007-Up	1	90374-A0019
77255A	Race, AB60E/AB60F Rear Planet Ring Gear Hub To Intermediate Shaft (.119”Thick)(2.241”OD)(1.441”ID) 2007-Up	1	35778-0C020
77262A	Caged Needle Bearing, AB60E/AB60F Case (Rear)(.373”Thick)(1.885”OD)(Cast # DB 76483) 2007-Up	1	
77263A	Race, AB60E (2wd) Case(Rear) To Output Shaft Snap Ring (.031”Thick)(2.248”OD)(1.603”ID) 2007-Up	1	35789-0C310
77264A	Bearing, AB60E (2wd) Case (Rear) To Output Shaft Snap Ring (.137”Thick)(2.275”OD)(1.588”ID) 2007-Up	1	90374-A0022
77265AA	Race, AB60E (2wd) Case (Rear) To Output Shaft Snap Ring (.151”Thick)(2.241”OD)(1.585”ID) 2007-Up	1	35789-0C320
77265AB	Race, AB60E (2wd) Case (Rear) To Output Shaft Snap Ring (.153”Thick)(2.241”OD)(1.585”ID) 2007-Up	1	35789-0C370
77265AC	Race, AB60E (2wd) Case (Rear) To Output Shaft Snap Ring (.155”Thick)(2.241”OD)(1.585”ID) 2007-Up	1	35789-0C330
77265AD	Race, AB60E (2wd) Case (Rear) To Output Shaft Snap Ring (.157”Thick)(2.241”OD)(1.585”ID) 2007-Up	1	25789-0C380
77265AE	Race, AB60E (2wd) Case (Rear) To Output Shaft Snap Ring (.159”Thick)(2.241”OD)(1.585”ID) 2007-Up	1	35789-0C340
77265AF	Race, AB60E (2wd) Case (Rear) To Output Shaft Snap Ring (.161”Thick)(2.241”OD)(1.585”ID) 2007-Up	1	35789-0C390
77265AG	Race, AB60E (2wd) Case (Rear) To Output Shaft Snap Ring (.163”Thick)(2.241”OD)(1.585”ID) 2007-Up	1	35789-0C350
77265AH	Race, AB60E (2wd) Case (Rear) To Output Shaft Snap Ring (.165”Thick)(2.241”OD)(1.585”ID) 2007-Up	1	35789-0C400

TOYOTA

© Whatever It Takes Transmission Parts. Inc.

77265AJ ..... Race, AB60E (2wd) Case (Rear) To Output Shaft Snap Ring (.167"Thick)(2.241"OD)(1.585"ID)
..... 2007-Up ..... 1 ..... 35789-0C360
77265AK ..... Race, AB60E (2wd) Case (Rear) To Output Shaft Snap Ring (.169"Thick)(2.241"OD)(1.585"ID)
..... 2007-Up ..... 1 ..... 35789-0C410
77265AL ..... Race, AB60E (2wd) Case (Rear) To Output Shaft Snap Ring (.171"Thick)(2.241"OD)(1.585"ID)
..... 2007-Up ..... 1 ..... 35789-0C420
77265AM ..... Race, AB60E (2wd) Case (Rear) To Output Shaft Snap Ring (.173"Thick)(2.241"OD)(1.585"ID)
..... 2007-Up ..... 1 ..... 35789-0C430
77283A ..... Washer, AB60E/AB60F Coast Clutch Hub To # 4 Sprag (.059"Thick)(3.813"OD)(5 Inner Tabs)
..... 2007-Up 1 35613-50010

PART #	GASKETS & RUBBER COMPONENTS	QTY	REFERENCE #

77300AW ..... Gasket, AB60E/AB60F Pan (Molded Rubber W/12 Steel Grommets) 2007-Up ..... 1 .....
77311A ..... O'Ring, AB60E/AB60F Pump To Case 2007-Up ..... 1 .....

PART #	ELECTRICAL COMPONENTS	QTY	REFERENCE #

77410A ..... Neutral Safety Switch, AB60E/AB60F (7 Prong Connector) 2007-Up ..... 1 ..... 84540-0C010
77421A ..... Solenoid, AB60E/AB60F (3 Way No. 1) (1 Prong Black Connector)(Cast #7L14)(1 Bolt Bracket)
..... 2007-Up (Also Fits AB60E/AB60F # 423 2007-Up) 1-2 35240-50030
77421B ..... Solenoid, AB60E/AB60F Shift (S1)(1 Pin Black Connector At 12:00)(With Square Hole In The
..... Metal End)(With 1 Bolt Bracket) 2007-Up ..... 1 .....
77422A ..... Solenoid, AB60E/AB60F Shift (S2)(Green Connector) 2003-Up (Normally Open) 1 35240-50040
117422B ..... Solenoid, AB60E/AB60F Shift (S2)(2 Pin Green Connector At 2:00)(With Square Hole In The
..... Metal End) 2007-Up ..... 1 .....
117425A ..... Solenoid, AB60E/AB60F Lock-Up (2 Blade Gray Connector)(Cast # 9CR7L 03550)
..... (3 1/4" Overall Length) 2007-Up 1 35280-34010
77426A ..... Use 117426B 1 35240-50060
117426B ..... Solenoid, AB60E/AB60F S4 (#426)(1 Pin Green Connector At 12:00)(With Square Hole In The
..... Metal End) 2007-Up ..... 1 .....
77428A ..... Solenoid, AB60E/AB60F Line Pressure (2 Prong Gray Connector)(Cast # 8CS7M 34686)
..... (3 3/4" Overall Length) 2007-Up 1 35290-34010
117428A ..... Solenoid, AB60E/AB60F Line Pressure (2 Blade Gray Connector)(3 7/8" Long) 2007-Up 1 35290-34010
77436A ..... Use U77438A ..... 1 .....
77438A ..... Sensor, AB60E/AB60F Input Speed (1 Bolt)(2 Blade Connector) 2007-Up
..... (Also Fits AB60E/AB60F Output Speed # 436 2007-Up) ..... 1-2 ..... 89413-0C020
117440B ..... Solenoid, AB60E/AB60F(3 Way No. 3) (1 Prong Blue Connector At 12:00)(Cast #DF17EW)
..... (With Large Round Hole In The Metal End)(1 Bolt Bracket) 2007-Up 1 35240-50050
77446-1A ..... Wire Harness, AB60E/AB60F Internal (2 Wire Case Connector)(1 Two Wire Connector)
..... 2007-Up ..... 1 .....
77446A ..... Wire Harness, AB60E/AB60F Internal (15 Prong Case Connector)(3 Two Wire & 5 One Wire
..... Connectors)(W/2 Sensors) 2007-Up ..... 1 .....
77450A ..... Solenoid, AB60E/AB60F No. 1 (2 Prong Black Connector)(Cast #0140 NJ199)(3"Overall Length)
..... 2007-Up (Also Fits AB60E/AB60F # 453 2007-Up) 1-2 35210-50010
77453A ..... Use U77450A ..... 1 .....
117453A ..... Solenoid, AB60E/AB60F (Fits #453 & #450)(2 Blade Black Connector)(No Hole In Metal End) .. 1-2 .....

PART #	HARDPARTS	QTY	REFERENCE #

77510A ..... Pump Body W/Gears, AB60E/AB60F (Cast # 8.02.02.0314) 2007-Up ..... 1 ..... 35301-0C030
77520A ..... Stator, AB60E/AB60F (Aluminum)(Cast # T1) 2007-Up ..... 1 ..... 35370-0C020
77530A ..... Pump Gear Set, AB60E/AB60F (.461" Thick)(9 Lobes On Inner Gear)(10 Lobes On Outer Gear)
..... 2007-Up ..... 1 .....
77545A ..... Housing, AB60E/AB60F B-2 Clutch Piston (Steel)(.694"Thick)(6 9/16"OD)(5.070"ID) 2007-Up ... 1 35699-34010
77547A ..... Housing, AB60E/AB60F B-1 Clutch Piston (Steel)(.720"Thick)(7 1/4"OD)(6 1/8"ID) 2007-Up 1 35698-34020
77549A ..... Apply Ring, AB60E/AB60F Reverse Clutch (.379"Thick)(7 5/8"OD)(6 1/4"ID)(Aluminum)
..... 2007-Up 1 35659-34010
77554A ..... Drum W/Shaft, AB60E/AB60F Forward Clutch (11 1/4"Tall)(24 Slots)(W/4 Ring Input Shaft)
..... 2007-Up ..... 1 ..... 35710-0C010
77555A ..... Drum, AB60E/AB60F Direct Clutch (5 Clutch)(Steel)(4.692" Overall Length) 2007-Up ..... 1 ..... 35601-0C030
77559A ..... Drum/Piston, AB60E/AB60F Coast Clutch (Bonded)(5 Clutch)(24 Clutch Splines) 2007-Up 1 35602-34010
77560A ..... Piston Kit, AB60E/AB60F B-2 Clutch (Aluminum Piston) 2007-Up ..... 1 .....
77562A ..... Piston Kit, AB60E/AB60F 2nd Brake Clutch 2007-Up ..... 1 .....
77564A ..... Piston Kit, AB60E/AB60F Coast Clutch 2007-Up ..... 1 .....
77565A ..... Apply Ring, AB60E/AB60F Reverse Clutch (.379"Thick)(7 5/8"OD)(6 1/4"ID)(Aluminum)
..... 2007-Up ..... 1 .....
77566A ..... Piston Kit, AB60E/AB60F Reverse Clutch 2007-Up ..... 1 .....
77567A ..... Piston Kit, AB60E/AB60F Low/Reverse Clutch (Piston Cast # 313019) 2007-Up ..... 1 .....
77569A ..... Piston Kit, AB60E/AB60F B-1 Clutch (Aluminum Piston) 2007-Up ..... 1 .....

© Whatever It Takes Transmission Parts. Inc.

PART #	HARDPARTS (Continued)	QTY	REFERENCE #
77571A	Hub, AB60E/AB60F Coast Clutch W/Inner Sprag Race (36 Teeth Hub) 2007-Up	1	35064-0C020
77575A	Hub, AB60E/AB60F Direct Clutch (7 3/8" Overall Length)(36 Teeth Clutch Hub)(6 3/8"OD) 2007-Up	1	35061-0C030
77576A	Hub, AB60E/AB60F Reverse Clutch (5 1/4" Overall Length)(40 Teeth Hub) 2007-Up	1	35049-0C030
77579A	Hub, AB60E/AB60F B-1 Clutch (W/#3 Sprag Inner Race)(40 Teeth Clutch Hub) .2007-Up	1	35707-0C030
77580A	Planet, AB60E/AB60F Center (4 Gear) (Uses A 30 Teeth Sun Gear) 2007-Up	1	35750-34010
77582A	Planet, AB60E/AB60F Front (8 Gear) (Uses A 42 Teeth Sun Gear) 2007-Up	1	35720-34020
77584A	Planet, AB60E (2wd) Rear W/Output Shaft (11 3/4" OverallLength)(4 Gear) 2007-Up	1	35760-0C070
77590A	Ring Gear, AB60E/AB60F Center Planet (70 Teeth)(16 Front Lugs) 2007-Up	1	35763-34020
77592A	Ring Gear, AB60E/AB60F Front Planet (90 Teeth)(16 Rear Lugs)(6"OD) 2007-Up	1	35743-34010
77594A	Ring Gear, AB60E/AB60F Rear Planet (70 Teeth)(57 Teeth Clutch Hub)(1.763"Thick)(5.603"OD) 2007-Up	1	35761-0C020
77602A	Hub, AB60E/AB60F Center Planet Ring Gear (4.683"OD) 2007-Up	1	35076-34010
77604A	Hub, AB60E/AB60F Rear Planet Ring Gear (4.952"OD) 2007-Up	1	35077-0C030
77610A	Sun Gear, AB60E/AB60F Center Planet (30 Teeth)(.964"Thick)(1.986"OD) 2007-Up	1	35719-34010
77612A	Sun Gear, AB60E/AB60F Front Planet (42 Teeth)(1.096"Thick)(2.670"OD) 2007-Up	1	35714-34010
77632A	Housing, AB60E/AB60F 2nd Brake Clutch Piston (Aluminum)(8"OD)(20 Outer Lugs) (24 Inner Lugs) 2007-Up	1	35664-34020
77640A	Sprag Assembly, AB60E/AB60F #4 (28 Elements) 2007-Up	1	34360-0C020
77642A	Sprag Assembly, AB60E/AB60F #2 (25 Elements) 2007-Up	1	35780-0C030
77644A	Sprag Assembly, AB60E/AB60F #3 (30 Elements) 2007-Up	1	35780-0C030
77648A	Sprag Assembly, AB60E/AB60F Low/Reverse (33 Elements)(Does Not Include The Inner Race) . 2007-Up	1	35770-0C030
77668A	Inner Race, AB60E/AB60F Low/Reverse Sprag (1.154"Thick)(3.530"OD) 2007-Up	1	35795-34030
77674A	Shaft, AB60E/AB60F Intermediate W/Sun Gear (12"Long)(W/30 Teeth Sun Gear) 2007-Up	1	35713-0C020
77698A	Oil Slinger, AB60E (2wd) In Extention Housing (2.570"OD)(1.646"ID)(Steel) 2007-Up	1	
77740A	Use 117740BA	1	35410-0C040
117740BA	Valve Body, AB60E/AB60F W/9 Solenoids (Cast # 89010) 2007-Up	1	
S117741ZK	Zip Kit, AB60E/AB60F (Sonnax)	1	
77750A	Bell Housing, AB60E/AB60F (5.7L)(5 1/8" Top Bolts)(Starter At 9:00)(Cast # UC) 2007-Up	1	35111-0C050
77760A	Case, AB60E/AB60F (Cast # 89020 2) 2007-Up	1	35104-0C030
77765A	Pan, AB60E 2wd (Bottom)(12 Bolts)(3 1/2"Deep On Deep End) 2007-Up	1	35106-0C030
77770-1A	Dust Cover, AB60E (2wd) Rear Seal (Tin)(2.604"Thick)(4.740"OD) 2007-Up	1	
77770A	Extention Housing, AB60E (2wd)(7 3/8" Long)(Cast # 345181-89030) 2007-Up	1	35180-0C040
77776AK	Bolt Set, AB60E/AB60F Bell Housing To Case (14 Pieces) 2007-Up	1	
77777AK	Bolt Set, AB60E/AB60F Pump To Case (10 Pieces) 2007-Up	1	
77779AK	Bolt Set, AB60E/AB60F Bottom Pan (12 Pieces) 2007-Up	1	
77781AK	Bolt Set, AB60E (2wd) Extention Housing To Case (10 Pieces) 2007-Up	1	
77854A	Cushion, AB60E Reverse Clutch (.072") (24 Teeth)(6 3/8"ID) 2007-Up	1	35672-34040
77861A	Snap Ring, AB60E/AB60F Holds B-2 Clutch Pressure Plate In (.063"Thick)(6 15/16"OD) 2007-Up	1	90520-99132
77864A	Snap Ring, AB60E/AB60F Holds Coast Clutch Pressure Plate In Drum (.063"Thick)(5.123"OD) 2007-Up	1	90520-99141
77868A	Snap Ring, AB60E/AB60F Holds Center Planet Ring Gear To Front Planet Ring Gear (.055"Thick)(6.017"OD) 2007-Up	1	90520-99140
77871A	Snap Ring, AB60E/AB60F Holds B-1 Clutch Return Spring In (.054"Thick)(8 3/4"OD) 2007-Up	1	90520-99133
77872A	Snap Ring, AB60E/AB60F Holds 2nd Brake Clutch Pressure Plate In (.118"Thick)(8"OD) 2007-Up	1	90520-99130
77873A	Snap Ring, AB60E/AB60F Holds 2nd Brake Apply Plate In (.055"Thick)(7 3/4"OD) 2007-Up	1	
77876A	Snap Ring, AB60E/AB60F Holds Forward Clutch Pressure Plate In Drum (.062"Thick)(5.332"OD) 2007-Up	1	90520-99129
77877A	Snap Ring, AB60E/AB60F Holds Coast Clutch Spring Retainer In Drum (.055"Thick)(1.737"OD) 2007-Up	1	
77878A	Snap Ring, AB60E/AB60F Holds Direct Clutch Pressure Plate In Drum (.087"Thick)(7 1/2"OD) 2007-Up	1	90520-99135
77879A	Snap Ring, AB60E/AB60F Holds Direct Clutch Spring Retainer In (.046"Thick)(3.060"OD) 2007-Up	1	90520-68006
77882A	Snap Ring, AB60E/AB60F Holds Hub # 602 To Center Planet Ring Gear (.055"Thick)(5.043"OD) 2007-Up	1	90520-99139
77883A	Snap Ring, AB60E/AB60F Holds 2nd Brake Piston Housing In Case (.118"Thick)(8 1/4"OD) (W/2 Eyelets) 2007-Up	1	90521-99138
77884A	Snap Ring, AB60E/AB60F Holds Low/Reverse Clutch Return Spring In (.031"Thick)(2.731"OD) 2007-Up	1	90520-61001
77890A	Snap Ring, AB60E/AB60F Holds Low/Reverse Sprag Outer Race In Case (.116"Thick) (7 1/4"OD)(W/2 Eyelets) 2007-Up	1	90521-99130
77891A	Snap Ring, AB60E/AB60F Holds Reverse Clutch Apply Ring In (.081"Thick)(8"OD) 2007-Up	1	90520-99134
77893A	Snap Ring, AB60E/AB60F Holds Reverse Clutch Spring Retainer In (.047"Thick)(3.375"OD) 2007-Up	1	90520-79001

TOYOTA

© Whatever It Takes Transmission Parts. Inc.

77897A ..... Snap Ring, AB60E (2wd) Output Shaft (Rear)(.120"Thick)(1.772"OD) 2007-Up 1 90520-38021
77925A ..... Accumulator Assembly, AB60E/AB60F C1 (.983"OD Piston)(Contains: Piston & 2 Springs)
..... 2007-Up ..... 1 .....
77935A ..... Accumulator Assembly, AB60E/AB60F C-2 (1.333"OD Piston)(Cast # C2)
..... (Contains: Piston & 2 Springs) 2007-Up ..... 1 .....
77945A ..... Accumulator Assembly, AB60E/AB60F C-3 (1.552"OD Piston)(Cast # B-C3)
..... (Contains: Piston & 2 Springs) 2007-Up ..... 1 .....
77950A ..... Accumulator Assembly, AB60E/AB60F B-3 (1.552"OD Piston)(Cast # B-B3)
..... (Contains: Piston & 2 Springs) 2007-Up ..... 1 .....
77957A ..... Retainer, AB60E/AB60F Reverse Clutch Spring (Aluminum)(6 1/2"OD)(3.340"ID) 2007-Up 1 35688-34010
77960A ..... Piston, AB60E/AB60F B-2 Clutch (Aluminum)(.414"Thick)(6 7/16"OD)(5.244"ID) 2007-Up 1 35622-34010
77960AK ..... Piston Kit, AB60E/AB60F 2007-Up ..... 1 .....
77962A ..... Piston, AB60E/AB60F 2nd Brake Clutch (Aluminum)(1.143"Thick)(7 1/4"OD) 2007-Up 1 35624-34010
77964A ..... Piston, AB60E/AB60F Coast Clutch (Bonded)(5 Clutch)(6 Outer Tabs) 2007-Up ..... 1 ..... 35621-0C020
77965A ..... Piston, AB60E/AB60F Direct Clutch (Aluminum)(W/4 Outer Lugs)(Cast #313023) 2007-Up 1 35652-34010
77966A ..... Piston, AB60E/AB60F Reverse Clutch (Steel)(4.866" Overall Height) 2007-Up ..... 1 ..... 35048-0C030
77967A ..... Piston, AB60E/AB60F Low/Reverse Clutch (Aluminum)(Cast # 313019) 2007-Up 1 35623-34010
77969A ..... Piston, AB60E/AB60F B-1 Clutch (Aluminum)(1.420"Thick)(6 1/4"ID) 2007-Up 1 35621-34020
77970A ..... Spring/Retainer, AB60E/AB60F B-1 Clutch Return (12 Springs)(5.525"ID) 2007-Up ..... 1 ..... 35045-0C020
77972A ..... Spring/Retainer, AB60E/AB60F 2nd Brake Clutch Return (36 Springs)(7 1/4"OD) 2007-Up ..... 1 ..... 35046-0C030
77974A ..... Spring/Retainer, AB60E/AB60F Coast Clutch Return (18 Springs)(3.467"OD)(2.100"ID)
..... 2007-Up ..... 1 ..... 35603-0C030
77975A ..... Spring/Retainer, AB60E/AB60F Direct Clutch Return (30 Springs)(5.270"OD)(4.304"ID)
..... 2007-Up ..... 1 ..... 34604-0C030
77976A ..... Spring/Retainer, AB60E/AB60F Reverse Clutch Return (34 Springs)(5.715"OD)(4.750"ID)
..... 2007-Up ..... 1 ..... 35047-0C030
77977A ..... Spring/Retainer, AB60E/AB60F Low/Reverse Clutch Return (20 Springs)(4.173"OD)(2.592"ID)
..... 2007-Up ..... 1 ..... 35068-0C020
77979A ..... Spring/Retainer, AB60E/AB60F B-1 Clutch Return (16 Springs)(7 3/8"OD) 2007-Up ..... 1 ..... 35608-0C020
77984A ..... Piston/Retainer, AB60E/AB60F Coast Clutch Spring (Aluminum)(18 Spring Pockets) 2007-Up 1 35668-34010
77985A ..... Piston/Retainer, AB60E/AB60F Direct Clutch Spring (Bonded)(5.745"OD)(4.304"ID) 2007-Up ..... 1 ..... 35669-0C020
77992A ..... Shift Lever, AB60E (2wd)(Cast # 35572 34010) 2007-Up ..... 1 .....
77994A ..... Park Rod Actuator, AB60E/AB60F (11" Long) 2007-Up ..... 1 .....
77995A ..... Park Pawl Assembly, AB60E/AB60F (Contains: 4 Pieces) 2007-Up ..... 1 .....
77998-1A ..... Cooler Adapter, AB60E/AB60F (3 Bolt Aluminum)(Cast # MPT-1)(W/2 Transmission Oil Lines)
..... 2007-Up ..... 1 .....
77998A ..... Cooler, AB60E/AB60F External (3 Bolt)(Cast # 3401)(W/2 Hose Snouts For Radiator Hoses)
..... 2007-Up ..... 1 .....

© Whatever It Takes Transmission Parts. Inc.

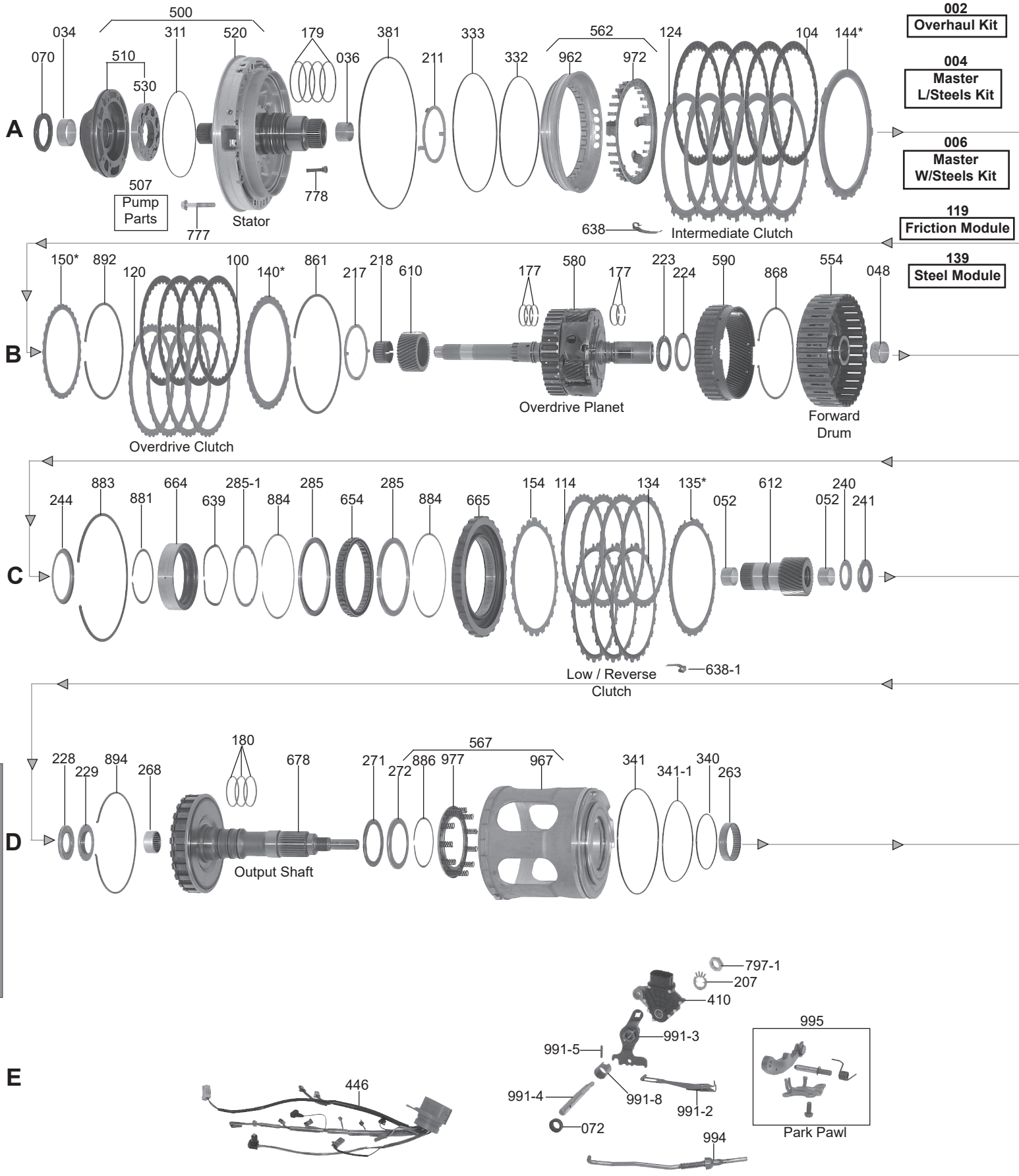

© Whatever It Takes Transmission Parts. Inc.

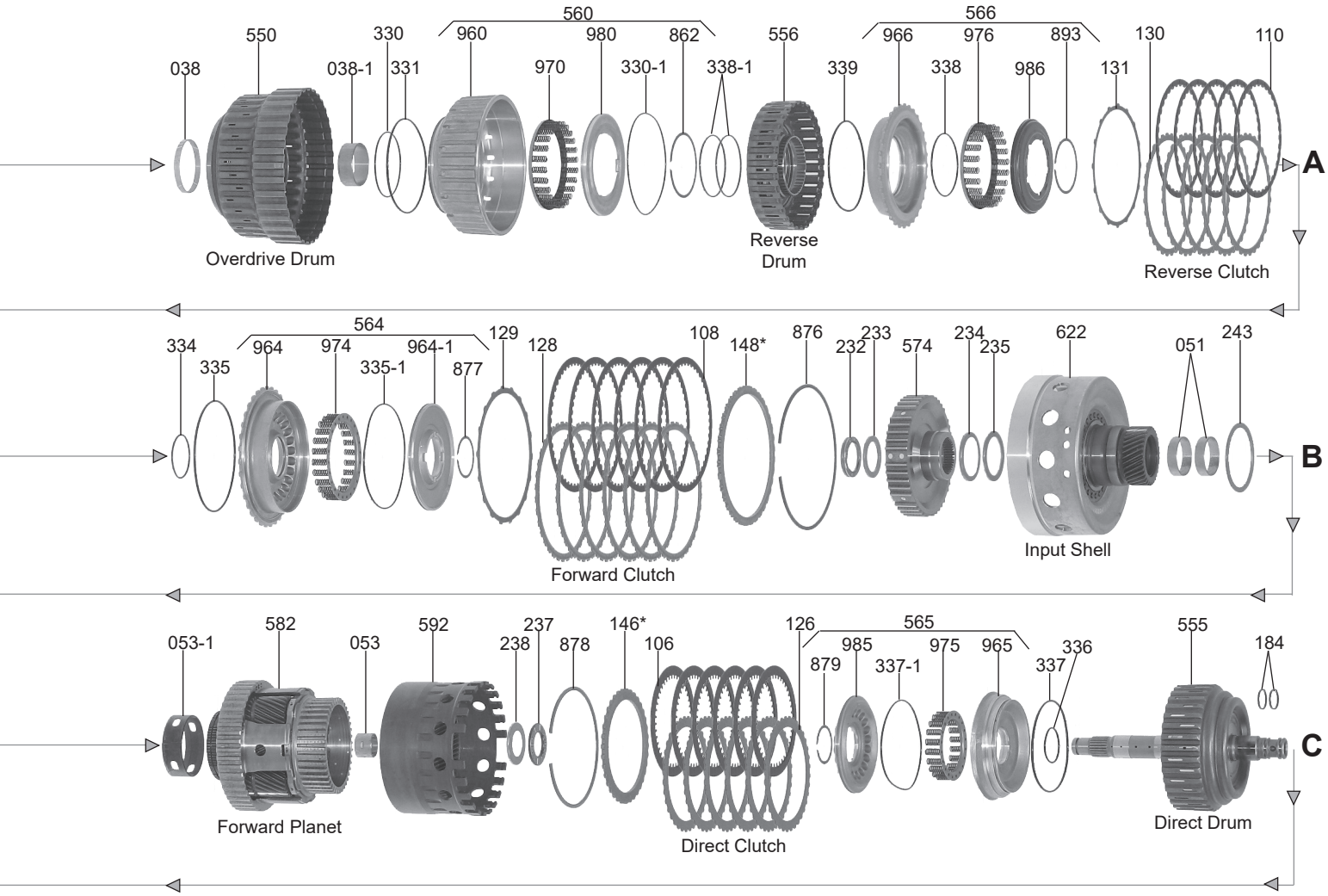

TOYOTA

© Whatever It Takes Transmission Parts. Inc.

PART #	OVERHAUL KITS	QTY	REFERENCE #
287002AW	Overhaul Kit, TL80SN (AA80E) 2007-UP	1	

PART #	MASTER L/STEELS KIT	QTY	REFERENCE #
287004AW	Master L/Steels Kit, TL80SN (AA80E) 2007-Up	1	

PART #	MASTER W/STEELS KIT	QTY	REFERENCE #
287006AW	Master W/Steels Kit, TL80SN (AA80E) 2007-Up	1	

PART #	FILTERS	QTY	REFERENCE #
287010A	Filter, AA80E (Plastic)(4 Bolt)(Oval Pick-Up)(1.270"OD Outlet) 2007-Up	1	35330-50030

PART#	BUSHINGS	QTY	REFERENCE #
287034A	Bushing, AA80E Pump Body (Bronze)(W/Oil Pockets)(1.770"ID) (.715"Wide)(1.920"OD) 2007-Up	1	
287036A	Bushing, AA80E Stator (Rear) (Bronze)(1.140"OD)(1.015"ID) (.815" Long) 2007-Up	1	
287038-1A	Bushing, AA80E Overdrive (Rear) (2.190"ID)(.860"Wide) 2007-Up	1	
287038A	Bushing, AA80E Overdrive Drum (Front)(2.635"ID)(2.860"OD) (.280"Wide)(4 Grooves) 2007-Up	1	
287048A	Bushing, AA80E Forward Drum (Bronze)(1.295"ID)(1.430"OD) (.620"Wide)(2 Grooves) 2007-Up	1	
287051A	Bushing, AA80E Input Shell W/Sungear (1.770"ID)(1.890"OD) (.410" Wide) 2007-Up	2	
287052A	Bushing, AA80E Forward Planet Sun Gear (Bronze W/Oil Pocket)(1.130"ID)(1.250"OD) 2007-Up	2	
287053-1A	Bushing, AA80E Forward Planet (Front)(Bronze W/4 Holes) (2.800"ID)(2.935"OD)(.995"Wide) 2007-Up	1	
287053A	Bushing, AA80E Forward Planet (Rear)(Bronze)(1.130"ID) 2007-Up	1	

PART #	METAL CLAD SEALS	QTY	REFERENCE #
287070A	Seal, AA80E Front Pump (Rubber Coated)(2.240"OD)(.245"Thick) 2007-Up	1	90311-45032
287072A	Seal, AA80E Linkage (.870"OD) (.460"ID)(.285"Thick) 2007-Up	1	90311-12002
287074A	Seal, AA80E Rear Case (2.880"OD)(1.975"ID)(.565"Thick) (NOK XHO492E) 2007-Up	1	90311-50038
287075A	Seal, AA80E Yoke (1.610"OD) (.265"Thick) 2007-Up	1	90312-33001

PART #	FRICTION CLUTCH	QTY	REFERENCE #
287100A	Friction, AA80E Overdrive Clutch (.082"Thick)(36 Teeth)(6.990"OD) 2007-Up	4	35677-50071
287104A	Friction, AA80E Intermediate Clutch (36 Teeth)(.074"Thick)(8.010"OD) 2007-Up	5	35681-50031
287106A	Friction, AA80E Direct Clutch (.082"Thick)(42 Teeth)(5.380"OD) 2007-Up	6	35667-50070
287108A	Friction, AA80E Forward Clutch (48 Teeth)(.072"Thick)(6.570"OD) 2007-Up	6	35633-50020
287110A	Friction, AA80E Reverse Clutch (.072"Thick)(36 Teeth) 2007-Up	5	35883-50010
287114A	Friction, AA80E Low/Reverse Clutch (50 Teeth)(7.090"OD)(.062"Thick) 2007-Up	4	35682-30030
287119A	Friction Module, TL80SN (AA80E) 2007-Up	1	

PART #	STEEL CLUTCH	QTY	Reference #
287120A	Steel, AA80E Overdrive Clutch (36 Teeth)(.077"Thick)(6.145"ID) 2007-Up	4	35648-50020
287124A	Steel, AA80E Intermediate Clutch (10 Teeth)(.078"Thick)(7.010"ID) (1 Wide Tooth, 2 Short, & 7 Tall) 2007-Up	5	35691-50020
287126A	Steel, AA80E Direct Clutch (.078"Thick)(36 Teeth)(4.495"ID) 2007-Up	6	35647-50020
287128A	Steel, AA80E Forward Clutch (36 Teeth)(.078"Thick)(5.965"ID) (6.830"OD) 2007-Up	6	35634-50020
287129A	Steel, AA80E Forward Clutch (Waved)(18 Teeth)(6.025"ID) 2007-Up	1	35672-50050
287130A	Steel, AA80E Reverse Clutch (32 Teeth)(.075"Thick)(5.245"ID) 2007-Up	5	35884-50010
287131A	Steel, AA80E (Waved) Reverse Clutch (16 Teeth)(5.355"ID)(Beveled) 2007-Up	1	35672-50060
287134A	Steel, AA80E Low/Reverse Clutch (24 Teeth)(0.070"Thick)(6.445"ID) (7.140"OD) 2007-Up	3	35692-50020
287135AA	Steel, AA80E Low/Reverse Clutch (Bottom)(2.0mm)(#0)(24 Teeth) (6.465"ID)(7.355"OD) 2007-Up	1	35678-50010
287135AB	Steel, AA80E Low/Reverse Clutch (Bottom)(2.1mm)(#1)(24 Teeth) (6.465"ID)(7.355"OD) 2007-Up	1	35678-50020
287135AC	Steel, AA80E Low/Reverse Clutch (Bottom)(2.2mm)(#2)(24 Teeth) (6.465"ID)(7.355"OD) 2007-Up	1	35678-50030
287135AD	Steel, AA80E Low/Reverse Clutch (Bottom)(2.3mm)(#3)(24 Teeth) (6.465"ID)(7.355"OD) 2007-Up	1	35678-50040

© Whatever It Takes Transmission Parts. Inc.

287135AE.....Steel, AA80E Low/Reverse Clutch (Bottom)(2.4mm)(#4)(24 Teeth) (6.465"ID)(7.355"OD) .....2007-Up 1 35678-50050
287135AF .....Steel, AA80E Low/Reverse Clutch (Bottom)(2.5mm)(#5)(24 Teeth) (6.465"ID)(7.355"OD) .....2007-Up 1 35678-50060
287135AG .....Steel, AA80E Low/Reverse Clutch (Bottom)(2.6mm)(#6)(24 Teeth) (6.465"ID)(7.355"OD) .....2007-Up 1 35678-50070
287135AH.....Steel, AA80E Low/Reverse Clutch (Bottom)(2.7mm)(#7)(24 Teeth) (6.465"ID)(7.355"OD) .....2007-Up 1 35678-50080
287135AJ .....Steel, AA80E Low/Reverse Clutch (Bottom)(2.8mm)(#8)(24 Teeth) (6.465"ID)(7.355"OD) .....2007-Up 1 35678-50090
287139A .....Steel Module, TL80SN (AA80E) 2007-Up .....1 .....

PART #	CLUTCH PRESSURE PLATES	QTY	REFERENCE #
287140AA	Pressure Plate, AA80E Overdrive Clutch (4.0mm)(36 Teeth)(6.140"ID) 2007-Up	1	34615-50060
287140AB	Pressure Plate, AA80E Overdrive Clutch (4.1mm)(36 Teeth)(6.140"ID) 2007-Up	1	34615-50070
287140AC	Pressure Plate, AA80E Overdrive Clutch (4.2mm)(36 Teeth)(6.140"ID) 2007-Up	1	34615-50080
287140AD	Pressure Plate, AA80E Overdrive Clutch (4.3mm)(36 Teeth)(6.140"ID) 2007-Up	1	34615-50090
287140AE	Pressure Plate, AA80E Overdrive Clutch (4.4mm)(36 Teeth)(6.140"ID) 2007-Up	1	34615-50100
287140AF	Pressure Plate, AA80E Overdrive Clutch (4.5mm)(36 Teeth)(6.140"ID) 2007-Up	1	34615-50110
287140AG	Pressure Plate, AA80E Overdrive Clutch (4.6mm)(36 Teeth)(6.140"ID) 2007-Up	1	34615-50120
287144AA	Pressure Plate, AA80E Intermediate Clutch (4.5mm)(#0)(10 Teeth)(7.010"ID) 2007-Up	1	35676-50070
287144AB	Pressure Plate, AA80E Intermediate Clutch (4.6mm)(#0)(10 Teeth)(7.010"ID) 2007-Up	1	35676-50080
287144AC	Pressure Plate, AA80E Intermediate Clutch (4.7mm)(#0)(10 Teeth)(7.010"ID) 2007-Up	1	35676-50090
287144AD	Pressure Plate, AA80E Intermediate Clutch (4.8mm)(#0)(10 Teeth)(7.010"ID) 2007-Up	1	35676-50100
287144AE	Pressure Plate, AA80E Intermediate Clutch (4.9mm)(#0)(10 Teeth)(7.010"ID) 2007-Up	1	35676-50110
287144AF	Pressure Plate, AA80E Intermediate Clutch (5.0mm)(#0)(10 Teeth)(7.010"ID) 2007-Up	1	35676-50120
287144AG	Pressure Plate, AA80E Intermediate Clutch (5.1mm)(#0)(10 Teeth)(7.010"ID) 2007-Up	1	35676-50130
287144AH	Pressure Plate, AA80E Intermediate Clutch (5.2mm)(#0)(10 Teeth)(7.010"ID) 2007-Up	1	35676-50140
287144AJ	Pressure Plate, AA80E Intermediate Clutch (5.3mm)(#0)(10 Teeth)(7.010"ID) 2007-Up	1	35676-50150
287146AA	Pressure Plate, AA80E Direct Clutch (4.0mm)(#40)(36 Teeth)(4.495"ID) 2007-Up	1	35635-50180
287146AB	Pressure Plate, AA80E Direct Clutch (4.2mm)(#42)(36 Teeth)(4.495"ID) 2007-Up	1	35635-50190
287146AC	Pressure Plate, AA80E Direct Clutch (4.4mm)(#44)(36 Teeth)(4.495"ID) 2007-Up	1	35635-50200
287146AD	Pressure Plate, AA80E Direct Clutch (4.6mm)(#46)(36 Teeth)(4.495"ID) 2007-Up	1	35635-50210
287146AE	Pressure Plate, AA80E Direct Clutch (4.8mm)(#48)(36 Teeth)(4.495"ID) 2007-Up	1	35635-50220
287146AF	Pressure Plate, AA80E Direct Clutch (4.1mm)(#41)(36 Teeth)(4.495"ID) 2007-Up	1	35635-50230
287146AG	Prssure Plate, AA80E Direct Clutch (4.3mm)(#43)(36 Teeth)(4.495"ID) 2007-Up	1	35635-50240
287146AH	Pressure Plate, AA80E Direct Clutch (4.5mm)(#45)(36 Teeth)(4.495"ID) 2007-Up	1	35635-50250
287146AJ	Pressure Plate, AA80E Direct Clutch (4.7mm)(#47)(36 Teeth)(4.495"ID) 2007-Up	1	35635-50260
287148AA	Pressure Plate, AA80E Forward Clutch (Top)(4.4mm)(#0)(36 Teeth) (5.960"OD) 2007-Up	1	35635-50090
287148AB	Pressure Plate, AA80E Forward Clutch (Top)(4.5mm)(#1)(36 Teeth) (5.960"OD) 2007-Up	1	35635-50100
287148AC	Pressure Plate, AA80E Forward Clutch (Top)(4.6mm)(#2)(36 Teeth) (5.960"OD) 2007-Up	1	35635-50110
287148AD	Pressure Plate, AA80E Forward Clutch (Top)(4.7mm)(#3)(36 Teeth) (5.960"OD) 2007-Up	1	35635-50120
287148AE	Pressure Plate, AA80E Forward Clutch (Top)(4.8mm)(#4)(36 Teeth) (5.960"OD) 2007-Up	1	35635-50130
287148AF	Pressure Plate, AA80E Forward Clutch (Top)(4.9mm)(#5)(36 Teeth) (5.960"OD) 2007-Up	1	35635-50140
287148AG	Pressure Plate, AA80E Forward Clutch (Top)(5.0mm)(#6)(36 Teeth) (5.960"OD) 2007-Up	1	35635-50150
287148AH	Pressure Plate, AA80E Forward Clutch (Top)(5.1mm)(#7)(36 Teeth) (5.960"OD) 2007-Up	1	35635-50160
287148AJ	Pressure Plate, AA80E Forward Clutch (Top)(5.2mm)(#8)(36 Teeth) (5.960"OD) 2007-Up	1	35635-50170
287150AA	Pressure Plate, AA80E Reverse Clutch (3.0mm)(32 Teeth)(5.250"ID) 2007-Up	1	35649-50080
287150AB	Pressure Plate, AA80E Reverse Clutch (3.1mm)(32 Teeth)(5.250"ID) 2007-Up	1	35649-50090
287150AC	Pressure Plate, AA80E Reverse Clutch (3.2mm)(32 Teeth)(5.250"ID) 2007-Up	1	35649-50100
287150AD	Pressure Plate, AA80E Reverse Clutch (3.3mm)(32 Teeth)(5.250"ID) 2007-Up	1	35649-50110
287150AE	Pressure Plate, AA80E Reverse Clutch (3.4mm)(32 Teeth)(5.250"ID) 2007-Up	1	35649-50120
287150AF	Pressure Plate, AA80E Reverse Clutch (3.5mm)(32 Teeth)(5.250"ID) 2007-Up	1	35649-50130
287150AG	Pressure Plate, AA80E Reverse Clutch (3.6mm)(32 Teeth)(5.250"ID) 2007-Up	1	35649-50140
287150AH	Pressure Plate, AA80E Reverse Clutch (3.7mm)(32 Teeth)(5.250"ID) 2007-Up	1	35649-50150
287150AJ	Pressure Plate, AA80E Reverse Clutch (3.8mm)(32 Teeth)(5.250"ID) 2007-Up	1	35649-50160
287154A	Pressure Plate, AA80E Low/Reverse Clutch (Top)(24 Teeth)(.092"Thick) 2007-Up	1	35632-50010

PART #	OIL SEALING RINGS	QTY	REFERENCE #
287177A	Ring, AA80E Input Shaft (Teflon) (.090"Thick)(1.345"OD) 2007-Up (Also Fits AA80E Overdrive Planet (Rear)	3-5	35617-50050
287179A	Ring, AA80E Stator To Overdrive Drum (Plastic)(2.665"OD) (.090"Thick)(Split Lap Joint) 2007-Up	4	35617-50030
287180A	Ring, AA80E Output Shaft (1.935"OD)(.090"Thick)(Teflon) 2007-Up	3	35617-50060
287184A	Ring, AA80E Direct Drum Shaft (1.010"OD)(.090"Thick)(Teflon) 2007-Up	2	

© Whatever It Takes Transmission Parts. Inc.

PART #	WASHERS & BEARINGS	QTY	REFERENCE #
287207A	Washer, AA80E PRNDL Switch (Locking) 2007-Up	1	
287211A	Washer, AA80E Stator To Overdrive Drum (Plastic)(4 Tabs)(3.700" OD)(3.200"ID)(.142"Thick) 2007-Up	1	35616-50010
287217A	Washer, AA80E Overdrive Planet (Front)(Plastic)(4 Tabs) (4 Cutouts)(.098"Thick)(3.560"OD) (3.100"ID) 2007-Up	1	35737-50020
287218A	Caged Needle Bearing, AA80E (Split) Rides On Input Shaft Inside Overdrive Planet (Front) (1.355"OD)(.810"Wide) 2007-Up	1	90364-31012
287223A	Bearing W/Race, AA80E Overdrive Planet (Rear)(2.280"OD)(1.430"ID) (24 Needles) 2007-Up	1	90374-36004
287224A	Race, AA80E Overdrive Planet (Rear) To Forward Drum (Cupped) (2.430"OD)(1.740"ID) 2007-Up	1	35789-50150
287228A	Bearing W/Race, AA80E Direct Drum To Output Shaft (2.185"OD) (1.210"ID) 2007-Up	1	90374-30017
287229A	Race, AA80E Direct Drum To Output Shaft (2.315"OD) (1.325"ID) 2007-Up	1	
287232A	Bearing W/Race, AA80E Forward Clutch Hub (Front)(Cupped)(1.905"OD) (1.365"ID)(.260"Thick) 2007-Up	1	90374-34013
287233A	Race, AA80E Forward Clutch Hub (Front)(2.035"OD)(1.445"ID) (.117"Thick) 2007-Up	1	35789-50160
287234A	Race, AA80E Forward Clutch Hub (Rear) To Input Shell (Front) (Cupped)(2.360"OD)(1.840"ID) 2007-Up	1	35789-50170
287235A	Bearing W/Race, AA80E Forward Clutch Hub (Rear)To Input Shell (Front) (2.425"OD)(1.850"ID) (.130"Thick) 2007-Up	1	90374-47003
287237A	Needle Bearing, AA80E Forward Planet To Direct Drum (.175" Thick)(2.050"OD)(1.135"ID) 2007-Up	1	90374-28016
287238A	Race, AA80E Forward Planet To Direct Drum (2.080"OD) (1.245"ID) 2007-Up	1	35789-50210
287240A	Race, AA80E Forward Planet Sungear To Forward Planet (1.955"OD)(1.185"ID) 2007-Up	1	35789-50190
287241A	Bearing W/Race, AA80E Forward Planet Sungear To Forward Planet (2.085"OD)(1.225"ID) (.190"Thick) 2007-Up	1	90374-31010
287243A	Bearing W/Race, AA80E Input Shell W/Sungear (Rear)(3.365"OD) (2.840"ID)(.110"Thick) 2007-Up	1	90374-71001
287244A	Race, AA80E Input Shell W/Sun Gear (Front)(3.495"OD)(2.865" ID)(.230"Thick) 2007-Up	1	35789-50180
287263A	Needle Bearing, AA80E In Case (Rear)(NSK DB505306W) 2007-Up	1	90364-53002
287264A	Ball Bearing, AA80E In Case (Rear) (2.830"OD)(1.685"ID) (.550"Thick)(11 Balls)(B42Z-5A1 NSK) 2007-Up	1	90363-42001
287268A	Bearing, AA80E Inside Bore Of Output Shaft (1.380"OD)(.820"Long) (NSK DB502907W) 2007-Up	1	
287271A	Bearing W/Race, AA80E Output Shaft To Case (3.030"OD)(2.325"ID) (.130"Thick) 2007-Up	1	90374-58002
287272A	Race, AA80E Output Shaft To Case (3.245"OD)(2.445"ID) 2007-Up	1	35789-50230
287285-1A	Spacer, AA80E Under Inner Race (3.920"OD)(.045"Thick)(6 ID Teeth) 2007-Up	1	
287285A	Washer, AA80E Sprag (Front & Rear)(4.490"OD)(4.195"ID) (Stepped) 2007-Up	2	

PART#	GASKETS & O-RINGS	QTY	REFERENCE #
287300A	Gasket, AA80E Bottom Pan (9 Bolt)(Molded Rubber) 2007-Up	1	35168-50010
287311A	O-Ring, AA80E Pump Body To Stator (5.530"OD)(.110"Thick) 2007-Up	1	90301-99087
287330-1A	O-Ring, AA80E Overdrive Piston Retainer (Outer)(4.990"OD) 2007-Up	1	90301-99118
287330A	O-Ring, AA80E Overdrive Drum (Inner)(3.280"OD) 2007-Up	1	90301-77002
287331A	O-Ring, AA80E Overdrive Piston (Outer)(4.805"OD)(.125"Thick) 2007-Up	1	90301-99086
287332A	O-Ring, AA80E Intermediate Clutch Piston (Inner)(6.920"OD) 2007-Up	1	90301-99172
287333A	O-Ring, AA80E Intermediate Clutch Piston (Outer)(7.590"OD) 2007-Up	1	90301-99170
287334A	O-Ring, AA80E Forward Clutch Piston (Inner)(1.910"ID) (.110"Thick) 2007-Up	1	90301-49011
287335-1A	O-Ring, AA80E Forward Clutch Piston/Retainer (Outer) (5.175"OD)(.105"Thick) 2007-Up	1	90301-99181
287335A	O-Ring, AA80E Forward Clutch Piston (Outer)(5.00"ID) (.130"Thick) 2007-Up	1	90301-99168
287336A	O-Ring, AA80E Direct Drum (Front)(1.785"OD)(.110"Thick) 2007-Up	1	90301-39013
287337-1A	O-Ring, AA80E Direct Clutch Retainer (Outer)(4.725"OD) (.120"Thick) 2007-Up	1	90301-99169
287337A	O-Ring, AA80E Direct Clutch Piston (Outer)(4.500"OD) (.110"Thick) 2007-Up	1	90301-99173
287338-1A	O-Ring, AA80E Reverse Drum (Inner Bore)(2.980"ID)(.110"Thick) 2007-Up	2	90301-74002
287338A	O-Ring, AA80E Reverse Clutch Piston (Inner)(2.920"ID) 2007-Up	1	90301-74002
287339A	O-Ring, AA80E Reverse Clutch Piston (Outer)(4.490"OD) 2007-Up	1	90301-99120
287340A	O-Ring, AA80E Low/Reverse Piston (In Case)(Inner)(3.295"OD) (.160"Thick) 2007-Up	1	
287341-1A	O-Ring, AA80E Low/Reverse Piston (In Case)(Middle)(5.185"OD) (.160"Thick) 2007-Up	1	90301-99123
287341A	O-Ring, AA80E Low/Reverse Piston (In Case)(Outer)(6.780"OD) (.180"Thick) 2007-Up	1	90301-99167
287371-1A	O-Ring, AA80E Fill Plug To Case (Passenger's Side) (.610"OD) 2007-Up	1	
287371A	O-Ring, AA80E Fill Plug To Case (Driver's Side)(.795"OD) 2007-Up	1	
287378A	O-Ring, AA80E Cooler Line Fitting (.650"OD)(.090"Thick) 2007-Up	2	
287379A	O-Ring, AA80E Filter Neck (1.465"OD)(.115"Thick) 2007-Up	1	90301-31014
287381A	O-Ring, AA80E Stator To Case (9 7/8"OD)(.140"Thick) 2007-Up	1	90301-99171
287387A	O-Ring, AA80E Drain Plug 2007-Up	1	
287398A	O-Ring, AA80E Vent Tube (.305"OD)(.065"Thick) 2007-Up	1	

© Whatever It Takes Transmission Parts. Inc.

PART #	ELECTRICAL COMPONENTS	QTY	REFERENCE #
287410A	Switch, AA80E PRNDL (2 Blade & 7 Pin Rectangle Connector) (Cast # TOYOTA NAIS) 2007-Up	1	
287421A	Solenoid, AA80E Shift (SL1) 2007-Up	1	35210-50040
287422A	Solenoid, AA80E Shift (SL2) 2007-Up	1	35210-50050
287423A	Solenoid, AA80E Shift (SL3) 2007-Up	1	35210-50060
287425A	Solenoid, AA80E Lock-Up (SL) 2007-Up	1	35270-50020
287427A	Solenoid, AA80E Shift (SL5) 2007-Up	1	
287428A	Solenoid, AA80E Line Pressure (SLT) 2007-Up	1	35290-50020
287431A	Solenoid, AA80E 3 Way Assembly (SR) 2007-Up	1	35240-50090
287435A	Solenoid, AA80E Lock-Up Control (SLU) 2007-Up	1	35280-50030
287436A	Sensor, AA80E Output Speed (2 Pin Connector)(Black) 2007-Up	1	
287438A	Sensor, AA80E Input Speed (4.100"Long)(2 Pin Connector) 2007-Up	1	
287439A	Sensor, AA80E Interm Speed (Cast # TL2) 2007-Up	1	
287440A	Solenoid, AA80E Shift (SL4) 2007-Up	1	35210-50070
287446A	Wire Harness, AA80E (25 Pin Connector)(13 Connectors) 2007-Up	1	82125-50060

PART #	MISCELLANEOUS COMPONENTS	QTY	REFERENCE #
287490A	Vent, AA80E (Plastic)(Elbow) 2007-Up	1	
287492A	Plug, AA80E Drain 2007-Up	1	
287493-1A	Plug, AA80E (Fill)(Passenger's Side)(T55 Round Head) (.720"Long) 2007-Up	1	
287493A	Plug, AA80E (Fill) Driver's Side (24mm)(6 Pt Hex Head) (.665"Long) 2007-Up	1	
287494-1A	Washer, A880E Fluid Level Check Plug (.665"OD)(.460"ID) (.060"Thick) 2007-Up	1	
287494A	Plug, AA80E Fluid Level Check 2007-Up	1	

PART #	HARDPARTS	QTY	REFERENCE #
287500A	Pump, AA80E Complete 2007-Up (Stator Cast # 6X19250) (Body Cast # 6X19263) 2007-Up	1	35301-50030
287510A	Pump Body W/Gears, AA80E (Cast Iron)(Cast # 6X19263) 2007-Up	1	35301-50030
287520A	Stator, AA80E (Aluminum)(Cast # 6X19250)(43 Splines) (4 Rings)(11 Bolts To Case)(7 Bolts To Body) 2007-Up	1	35370-50040
287530A	Pump Gear Set, AA80E (Lobe Type)(9 Teeth Inner & 10 Teeth Outer) (3.675"OD)(.457"Thick) 2007-Up	1	35321-50080
287550A	Drum, AA80E Overdrive (Stamped Steel)(4.300"Tall)(36 Teeth Steels) 2007-Up	1	35601-50050
287554A	Drum, AA80E Forward (6 Clutch) (36 Teeth Steels)(2.315"Tall) (7.005"OD)(1.330"ID Bore) 2007-Up	1	35601-50040
287555A	Drum W/Shaft, AA80E Direct (Stamped Steel)(10 3/8"Long) (6 Clutch)(36 Teeth Steels) (24 Splines) 2007-Up	1	35605-50020
287556A	Drum, AA80E Reverse (Stamped Steel)(32 Teeth Steels)(20 ID Splines)(32 Slots)(6.215"OD) (1.680"Tall) 2007-Up	1	35606-50010
287560A	Piston Kit, AA80E Overdrive Clutch (Contains: #'s 960A,970A,980A,862A) 2007-Up	1	
287562A	Piston Kit, AA80E Intermediate Clutch (Contains: #'s 962A & 972A) 2007-Up	1	
287564A	Piston Kit, AA80E Forward Clutch (Contains: #'s 964A,974A, 964-1A, 877A) 2007-Up	1	
287565A	Piston Kit, AA80E Direct Clutch (Contains: #'s 965A,975A,985A,879A) 2007-Up	1	
287566A	Piston Kit, AA80E Reverse Clutch (Contains: #'s 966A,976A,986A,893A) 2007-Up	1	
287567A	Piston Kit, AA80E Low/Reverse (In Case)(Contains: #'s 967A, 977A, 886A) 2007-Up	1	
287574A	Hub, AA80E Forward Clutch (40 Outer Teeth)(1.990"Thick) (Stepped Nose) 2007-Up	1	35631-50030
287580A	Planet W/Input Shaft, AA80E Overdrive (8 Gear)(13 1/2" Long) (12 Teeth Reluctor) 2007-Up	1	35720-50030
287582A	Planet, AA80E Forward (4 Long Gears & 4 Short Gears) (5.950"Tall)(2 Clutch Hub)(Aluminum Hub Has 12 Bolts) 2007-Up	1	85760-50040
287590A	Ring Gear, AA80E Overdrive Planet (82 Teeth)(36 Outer Clutch Teeth) (1.790"Thick) 2007- Up	1	35743-50030
287592A	Ring Gear, AA80E Forward Planet (74 Teeth)(22 Lugs) (12 Round Holes)(3.365"OD)(4.090"Tall) 2007-Up	1	35761-50030
287610A	Sun Gear, AA80E Overdrive Planet (38 Teeth)(43 Splines)(2.485"OD) (1.255"Thick) 2007-Up	1	35719-50040
287612A	Sun Gear, AA80E Forward Planet (30 Teeth)(4.155"Long)(2.405"OD) 2007-Up	1	35707-50010
287622A	Shell, AA80E Input W/34 Teeth Sungear (Aluminum) 2007-Up	1	35709-50020
287638-1A	Clip, AA80E Anti-Rattle (Rear) (1.630"Long)(.395"Wide) 2007-Up	1	35639-50010
287638A	Clip, AA80E Anti-Rattle (Front)(2.010"Long)(.450"Wide) 2007-Up	1	35639-50020
287639A	Cushion, AA80E Inner Race (Waved)(Split)(3.910"OD) (.040"Thick)(.200"Wide) 2007-Up	1	
287654A	Sprag, AA80E (39 Elements) (.585"Thick) 2007-Up	1	35791-50030
287664A	Inner Race, AA80E Sprag (4.195 "OD)(1.005"Thick) 2007-Up	1	
287665A	Outer Race, AA80E (24 Teeth)(7.600" OD)(1.085"Thick) 2007-Up	1	35795-50020
287678A	Shaft, AA80E Output (2WD) (10 3/4" Long)(24 Lugs) (.630"OD Pilot) 2007-Up	1	35073-50010
287740A	Valve Body, AA80E (17 Bolts To Case)(5 Large Solenoids, 4 Small Solenoids, 1 Temp Sensor) (1.490"OD Filter Hole) 2007-Up	1	35410-50130
287760A	Case, AA80E (9 Pan Bolts)(14 Holes To Engine)(Starter At 9:00)(27 1/8" Long)(2WD) 2007-Up	1	35104-50030
287765A	Pan, AA80E Bottom (9 Bolt) 2007-Up	1	35106-30300

© Whatever It Takes Transmission Parts. Inc.

PART #	HARDPARTS	QTY	REFERENCE #
287777AK	Bolt Set, AA80E Stator To Case (11 Pieces)(12mm x 2.240" Long) (Hex Head) 2007-Up	1	
287778AK	Bolt Set, AA80E Stator To Body (7 Pieces)(T30 x 1.315" Long) 2007-Up	1	
287779AK	Bolt Kit, AA80E Pan (9 Pieces) (10mm x 1.080" Long) 2007-Up	1	
287782AK	Bolt Set, AA80E Valve Body To Case (17 Pieces) 2007-Up	1	
287790AK	Bolt Set, AA80E Filter (4 Pieces) (10mm Hex x .830" Long) 2007-Up	1	
287797-1A	Nut, AA80E Holds PRNDLE Switch On (6 Point)(22mm) 2007-Up	1	
287798A	Nut, AA80E Output Shaft (6 Point)(30mm) 2007-Up	1	90179-22030
287841A	Yoke, AA80E (3 Bolt) (3.265"Tall) 2007-Up	1	34780-50040
287861A	Snap Ring, AA80E Holds Overdrive Pressure Plate In Drum (.095"Thick) (7.510"OD)(.195"Wide) 2007-Up	1	90521-99141
287862A	Snap Ring, AA80E Holds Overdrive Spring Retainer In (3.165"OD) (.050"Thick)(.155"Wide) 2007-Up	1	90520-72008
287868A	Snap Ring, AA80E Holds Overdrive Ring Gear To Forward Drum (.075"Thick)(5.920"OD) 2007-Up	1	90521-99148
287876A	Snap Ring, AA80E Holds Forward Clutch Pressure Plate In Drum (.095"Thick)(7.065"OD) (.195"Wide) 2007-Up	1	90521-99145
287877A	Snap Ring, AA80E Holds Forward Clutch Piston/Retainer In Drum (2.050"OD)(.048"Thick) 2007-Up	1	90520-44039
287878A	Snap Ring, AA80E Holds Direct Clutch Pressure Plate In Drum (.097"Thick)(5.820"OD) (.200"Wide) 2007-Up	1	90520-99144
287879A	Snap Ring, AA80E Hold Direct Clutch Piston In Drum (1.875"OD) (.045"Thick)(.155"Wide) 2007-Up	1	90520-40019
287881A	Snap Ring, AA80E Holds Sprag Race On Forward Planet (3.465" OD)(.045"Thick)(.195"Wide) 2007-Up	1	
287883A	Snap Ring, AA80E Holds Low/Reverse Clutch In Case (8.075"OD) (.115"Thick)(Beveled) (.215"Wide) 2007-Up	1	90521-99137
287884A	Snap Ring, AA80E Holds Rear Sprag In Outer Race (Front & (Rear)(5.340"OD)(.040"Thick) (.055"Wide) 2007-Up	2	90521-99143
287886A	Snap Ring, AA80E Holds Spring Retainer In The Case Piston (3.240"OD)(.030"Thick)(.160"Wide) 2007-Up	1	90520-74002
287892A	Snap Ring, AA80E Holds Reverse Clutch Pressure Plate In Drum (.095"Thick)(6.150"OD) (.200"Wide) 2007-Up	1	90521-99142
287893A	Snap Ring, AA80E Holds Reverse Clutch Piston Retainer In (2.705"OD)(.045"Thick)(.155"Wide) 2007-Up	1	90520-61002
287894A	Snap Ring, AA80E Holds Forward Planet Ring Gear To Output Shaft (6.450"OD)(.095"Thick) (.140"Wide) 2007-Up	1	90521-99147
287897A	Snap Ring, AA80E Holds Bearing In Rear Case (2.980"OD)(.057"Thick)(.185"Wide) 2007-Up	1	90521-76006
287960A	Piston, AA80E Overdrive (Aluminum) (18 Holes)(6.755"OD)(2.905" Tall) 2007-Up	1	35612-50040
287962A	Piston, AA80E Intermediate Clutch (Aluminum)(7.810"OD)(5.910"ID) (29 Spring Pockets) 2007-Up	1	35621-50020
287964-1A	Piston/Retainer, AA80E Forward Clutch (5.165"OD)(1.885"ID) (.655"Thick) 2007-Up	1	35668-50020
287964A	Piston, AA80E Forward Clutch (Aluminum)(24 Spring Pockets) (36 Outer Lugs)(6.830"ID) 2007-Up	1	35612-50030
287965A	Piston, AA80E Direct Clutch (Aluminum)(5.230"OD)(1.780"ID) (1.100"Tall) 2007-Up	1	35652-50010
287966A	Piston, AA80E Reverse Clutch (Aluminum)(32 Outer Teeth) (22 Spring Pockets)(2.925"ID) (1.080"Tall) 2007-Up	1	35645-50010
287967A	Piston, AA80E Low/Reverse (In Case)(6 1/2"Tall)(7 1/16"OD) (22 Spring Pockets) 2007-Up	1	35622-50020
287970A	Spring Retainer, AA80E Overdrive Clutch (24 Springs)(4.460"OD) (.840"Tall) 2007-Up	1	34604-50020
287972A	Retainer W/Springs, AA80E Intermediate Clutch Piston (6.760"OD) (1.135"Tall)(29 Springs) 2007-Up	1	35608-50020
287974A	Spring/Retainer, AA80E (24 Springs)(4.235"OD)(3.380"ID) 2007-Up	1	35603-50040
287975A	Spring/Retainer, AA80E Direct Clutch (20 Springs)(3.390"OD) (2.505"ID)(.830"Tall) 2007-Up	1	35604-50020
287976A	Spring/Retainer, AA80E Reverse Clutch Piston (22 Springs) (4.195"OD)(3.345"ID)(.860"Tall) 2007-Up	1	35047-50010
287977A	Spring/Retainer, AA80E Case Piston (11 Springs)(4.600"OD) (3.120"ID)(.910"Tall) 2007-Up	1	35608-50030
287980A	Retainer, AA80E Overdrive Clutch (Aluminum)(24 Spring Pockets) (4.975"OD)(.460"Thick) 2007-Up	1	35688-50020
287985A	Retainer, AA80E Direct Clutch Piston (Aluminum)(4.690"OD) (20 Spring Pockets)(1.705"ID) (.970"Tall) 2007-Up	1	35669-50010
287986A	Retainer, AA80E (Bonded) Reverse Clutch Piston (2.565"ID)(4.580"OD)(.485"Thick)(5 Notches) 2007-Up	1	35666-50020
287991-2A	Detent Spring, AA80E (5.125" Long)(.275"Roller) 2007-Up	1	
287991-3A	Rooster Comb, AA80E (1.180" Long)(5 Detents)(.475"Hole) 2007-Up	1	35505-30040
287991-4A	Manual Rod, AA80E (4.410"Long) (.470"OD) 2007-Up	1	35561-50030
287991-5A	Roll Pin, AA80E Holds Rooster Comb Locked To The Linkage Rod (.775"Long)(.160"OD) 2007-Up	1	90254-04011
287991-8A	Sleeve, AA80E Holds Roll Pin In Rooster Comb (.850"Long) (.835"OD) 2007-Up	1	90560-20025
287994A	Park Rod, AA80E (10 3/16"Long) 2007-Up	1	35501-50020

TOYOTA

© Whatever It Takes Transmission Parts. Inc.

287995A .....Park Pawl Assembly, AA80E (4 Pieces) 2007-Up .....1 .....
287996A .....Fitting, AA80E Cooler Line (Elbow)(19mm Hex End & Jam Nut) 2007-Up .....2 .....

© Whatever It Takes Transmission Parts. Inc.

010 Differential

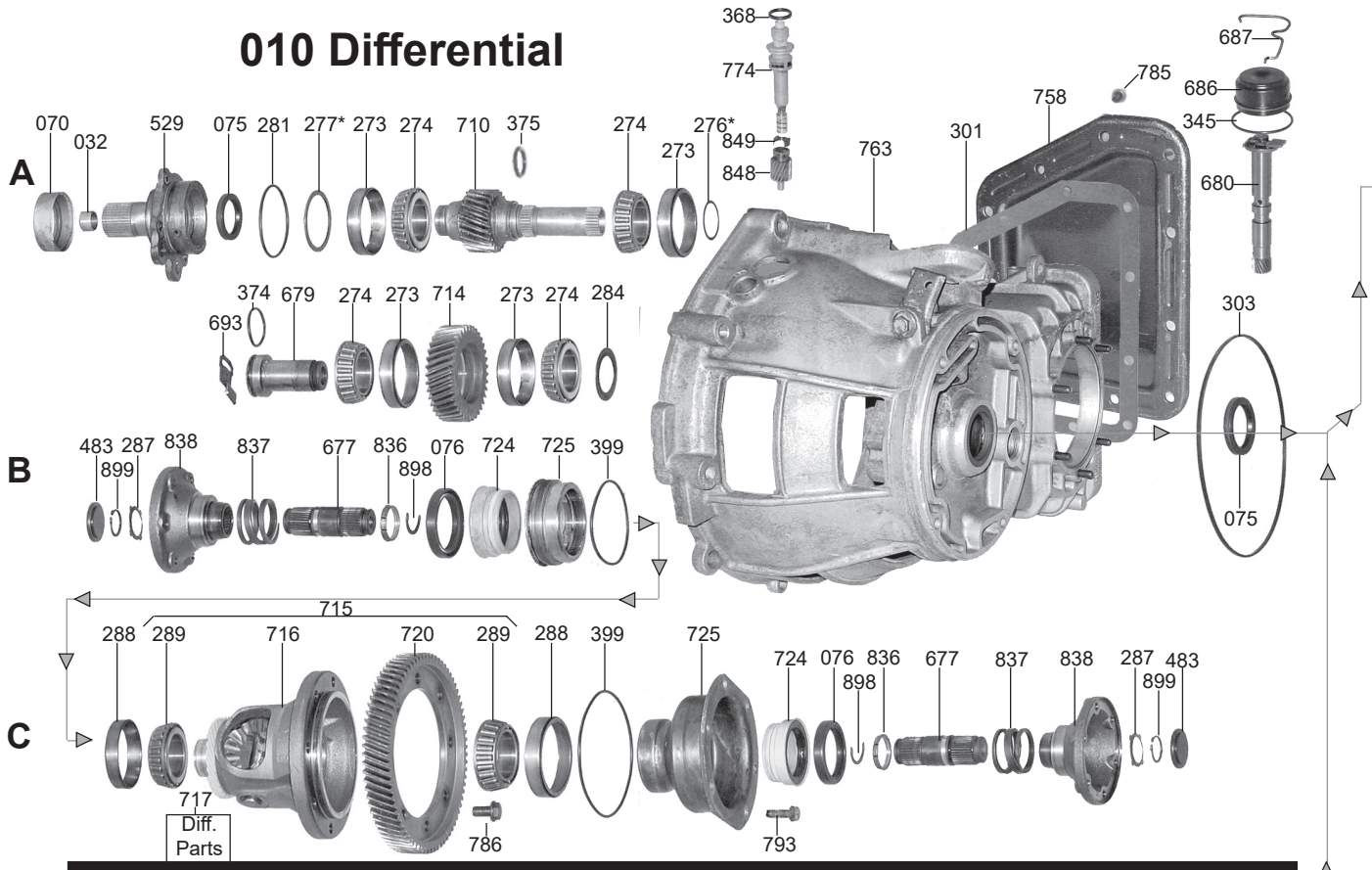

089 Differential

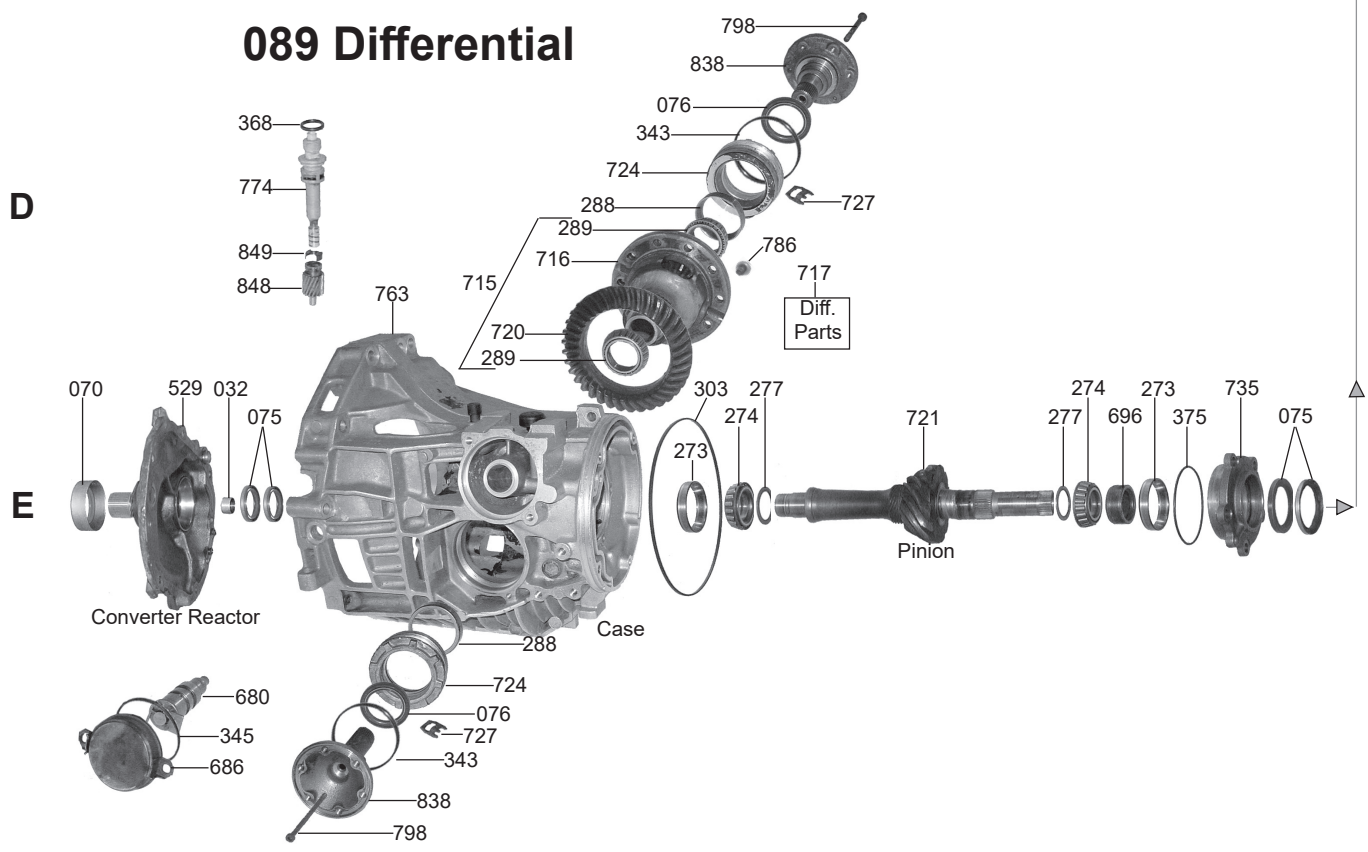

© Whatever It Takes Transmission Parts. Inc.

000 P&R Kits

002 Overhaul Kits

004 Master L/ Steels Kit

006 Master W/ Steels Kit

030 Bushing Kits

119 Friction Module

175 Ring Kits

400 Technical Manuals

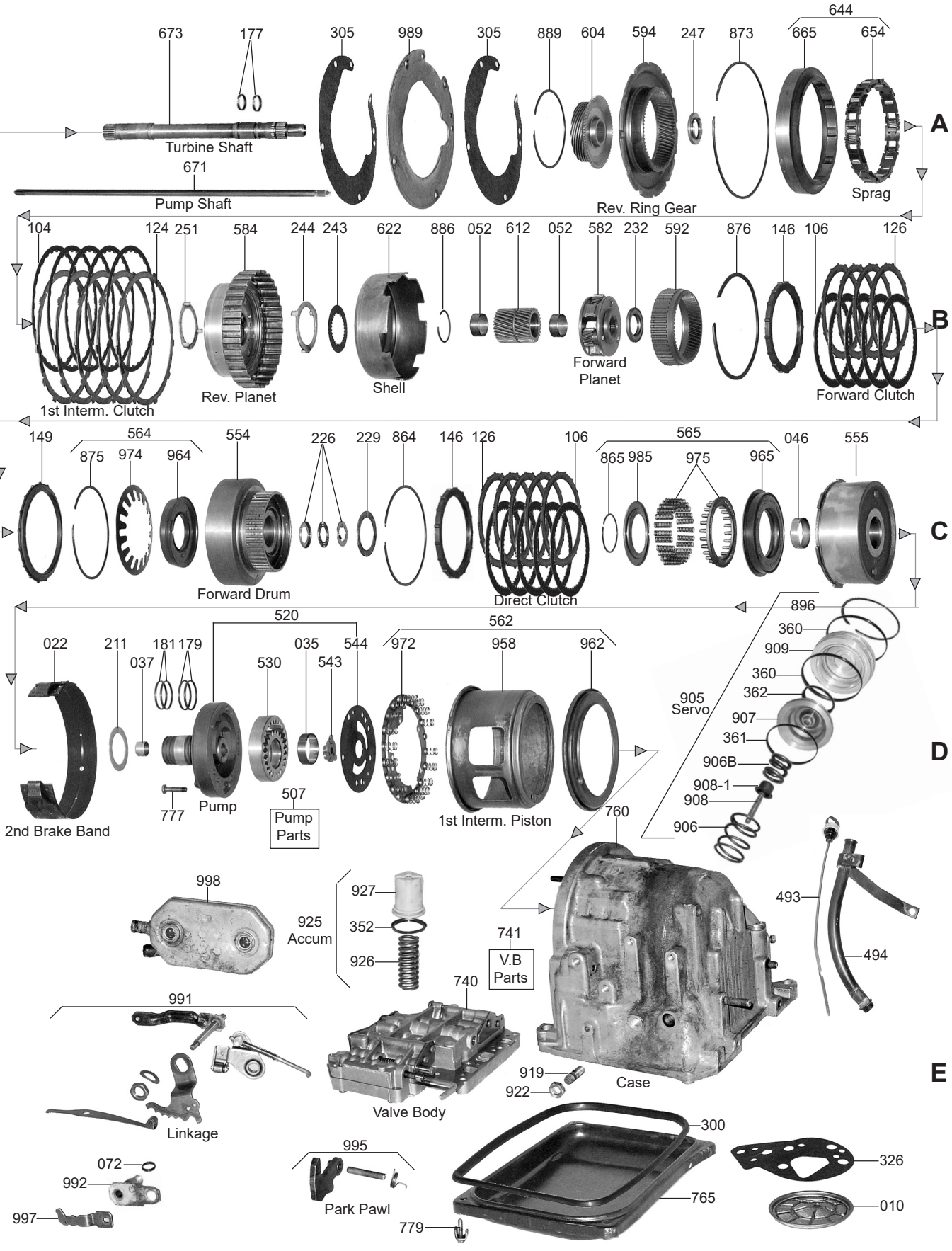

© Whatever It Takes Transmission Parts. Inc.

PART #	PAPER & RUBBER KIT	QTY.	REFERENCE #
65000	Paper & Rubber Kit, 010/087/089/090 (Without Differential Seals) 1975-Up	1	
65001D	Sub Kit, 090 (Vanagon) Use This Kit With 65002C/65004C/65006C Kit	1	

PART #	OVERHAUL KITS	QTY.	REFERENCE #
65002	Overhaul Kit, 010/087/089/090 (Without Differential Seals) 1975-Up (For Bonded Pistons Sell A65962, A65962A, A65964 & A65965)	1	
65002A	Overhaul Kit, 010 (With Differential Seals) 1975-Up (For Bonded Pistons Sell A65962, A65962A, A65964 & A65965)	1	
65002B	Overhaul Kit, 087 (Audi 5 Cylinder)(With Differential Seals) 1983-Up (For Bonded Pistons Sell A65962, 65962A, A65964 & A65965)	1	
65002C	Overhaul Kit, 089 (Audi 4 Cylinder) (With Differential Seals) 1976-Up (For 090 Vanagon Sell 65001D Also)(For Bonded Pistons Sell A65962, A65962A, A65964 & A65965)	1	

PART #	MASTER L/STEEL KIT	QTY.	REFERENCE #
65004	Master L/Steels Kit, 010/087/089/090 (Without Differential Seals) 1975-Up (For Bonded Pistons Sell A65962, A65962A, A65964 & A65965)	1	
65004A	Master L/Steels Kit, 010 (With Differential Seals) 1975-Up (For Bonded Pistons Sell A65962, A65962A, A65964 & A65965)	1	
65004B	Master L/Steels Kit, 087 (Audi 5 Cylinder) (With Differential Seals) 1977-82 (For Bonded Pistons Sell A65962, A65962A, A65964 & A65965)	1	
65004BA	Master L/Steels Kit, 087 (Audi 5 Cylinder) (With Differential Seals) 1983-Up (For Bonded Pistons Sell A65962, A65962A, A65964 & A65965)	1	
65004C	Master L/Steels Kit, 089 (Audi 4 Cylinder) (With Differential Seals) 1976-Up (For 090 Vanagon Sell 65001D Also)(For Bonded Pistons Sell A65962, A65962A, A65964 & A65965)	1	

PART #	MASTER W/STEEL KIT	QTY.	REFERENCE #
65006	Master W/Steels Kit, 010/087/089/090 (Without Differential Seals) 1975-Up (For Bonded Pistons Sell A65962, A65962A, A65964 & A65965)	1	
65006A	Master W/Steels Kit, 010 (With Differential Seals) 1975-Up (For Bonded Pistons Sell A65962, A65962A, A65964 & A65965)	1	
65006B	Master W/Steels Kit, 087 (Audi 5 Cylinder) (With Differential Seals) 1977-82 (For Bonded Pistons Sell A65962, A65962A, A65964 & A65965)	1	
65006BA	Master W/Steels Kit, 087 (Audi 5 Cylinder) (With Differential Seals) 1983-Up (For Bonded Pistons Sell A65962, A65962A, A65964 & A65965)	1	
65006C	Master W/Steels Kit, 089 (Audi 4000) (With Differential Seals) 1976-Up (For 090 Vanagon Sell 65001D Also)(For Bonded Pistons Sell A65962, A65962A, A65964 & A65965)	1	

PART #	FILTER	QTY.	REFERENCE #
65010	Filter 010/089 Rectangular 1975-76	1	010-325-421
65010A	Filter, 010/087/089/090 Round 1977-Up	1	010-325-421A

PART #	BANDS	QTY.	REFERENCE #
65022	Band, 010/087/089/090 1975-Up (Except 1983-Up Audi 5 Cylinder)	1	010-323-461C
65022A	Band, 087 Audi 5 Cylinder1983-Up	1	

PART #	BUSHINGS	QTY.	REFERENCE #
65030	Bushing Kit, 010/087/089/090 1975-Up	1	
65031	Bushing, 010/087/089/090 Converter Hub (Use 65035)	1	003-323-611
65032	Bushing, 010/087/089/090 Converter Reactor	1	003-519-074
65035	Bushing, 010/087/089/090 Inner Pump Gear (Also Fits Converter Hub)	1-2	003-323-611
65037	Bushing, 010/087/089/090 Pump Stator	1	003-321-254
65046	Bushing, 010/087/089/090 Direct Drum	1	010-323-115
65052	Bushing, 010/087/089/090 Sun Gear	2	010-323-217A

PART #	METAL CLAD SEALS	QTY.	REFERENCE #
65070	Seal, 010/087/089 Front (Except 090) 1975-Up	1	010-409-568
165070	Seal, 090 Front 1977-Up	1	003-519-089D
65075	Seal, 010 Pinion Shaft (Rear) 1975-Up	1	010-409-529C
65075A	Seal, 087 Pinion Shaft (Front) 1979-Up	2	087-409-085A
65075AA	Seal, 089 Pinion Shaft (Front) 1976-Up	1	089-409-085B
65075B	Seal, 089 Pinion Shaft (Rear) 1975-79	2	089-409-529A

© Whatever It Takes Transmission Parts. Inc.

165075B	Seal, 010/090 Pinion Shaft (Front) 19754-Up	1	010-409-085D
65075C	Seal, 087 Pinion Shaft (Rear) 1979-Up	2	087-409-529A
65076	Seal, 010 Axle (Both Sides) 1979-83	2	010-409-085
65076A	Seal, 010 Axle (Both Sides) 1984-Up	2	020-301-189M
65076B	Seal, 087/089/090 Axle (Both Sides) 1975-Up	2	018-409-399
65079	Seal, 087 Turbine Shaft 1984-Up	1	087-323-559
65080B	Seal, 087/089 Governor Shaft 1977-Up	1	087-409-133A

PART #	FRICTION CLUTCH	QTY.	REFERENCE #
65104	Friction, 010/087/089/090 1st Intermediate Clutch (.061") 1975-Up	4-5	010-323-231
65106	Friction, 010/087/089/090 Forward & Direct Clutch (.090") (4.75"OD) 1975-Up	3-5	010-323-141C
65106A	Friction, 010/087/089/090 Direct Clutch (.090") (5.00"OD) 1983-Up	5	087-323-141A
65106B	Friction, 010/087/089/090 Forward Clutch (.061")(4.75'OD)(With 1 Tooth Missing) 1975-Up	3-5	010-323-241C
65106D	Friction, 010 (Diesel) Forward Clutch (.061") (With 2 Teeth Missing) 1978-88	5	010-223-241B
65119	Friction Module, 010/087/089/090 1975-Up (Except 1983-Up Audi 5000)	1	
65119BA	Friction Module, 087 Audi 5000 1983-Up	1	

PART #	STEEL CLUTCH	QTY.	REFERENCE #
65124	Steel, 010/087/089/090 1st Intermediate Clutch (.079") 1975-Up	4-5	010-323-227A
65126	Steel, 010/087/089/090 Forward & Direct Clutch (.079") (17 Teeth) 1975-Up	5-9	010-323-139
65126A	Steel, 087 Direct Clutch (.079") (53 Teeth) 1983-Up	5	087-323-139

PART #	CLUTCH PRESSURE PLATES	QTY.	REFERENCE #
65146	Pressure Plate, 010/087/089/090 Forward & Direct (Top) 1975-Up (Except 1983-Up Audi 5cyl)	1-2	
64146A	Pressure Plate, 087 Direct (Top) Audi 5cyl 1983-Up	1	
65149	Pressure Plate, 010/087/089/090 Forward Clucth (Bottom) 1975-Up	1	

PART #	OIL SEALING RINGS	QTY.	REFERENCE #
65175	Ring Kit, 010/087/089/090 1975-Up	1	
65177	Ring, 010/087/089/090 Input Shaft 1975-Up	2	010-323-557A
65179	Ring, 010/087/089/090 Direct Clutch 1975-Up	2	010-321-261
65181	Ring, 010/087/089/090 Forward Clutch 1975-Up	2	003-321-261

PART #	WASHERS & BEARINGS	QTY.	REFERENCE #
65211	Washer, 010/087/089/090 Pump To Direct Drum (Metal)	1	003-321-285
65211A	Washer, 010/087/089/090 Pump To Direct Drum (Plastic)	1	
65226	Washer, 010/087/089/090 Forward Drum To Pump	1	003-323-165
65226A	Bearing, 010/087/089/090 Forward Drum To Pump	1	
65229	Washer, 010/087/089/090 Forward Drum To Direct Drum (3Metal, 3 Tab)	1	003-323-161A
65229A	Washer, 010/087/089/090 Forward Drum To Direct Drum (Plastic)	1	003-323-161AP
65232	Bearing, 010/087/089/090 Forward Drum To Planet	1	
65243	Washer, 010/087/089/090 Drive Shell (29 Teeth Sun Gear)	1	010-323-291A
65243A	Washer, 010/087/089/090 Drive Shell (26 Teeth Sun Gear)	1	
65243B	Washer, 010/087/089/090 Drive Shell (28 Teeth Sun Gear)	1	
65244	Washer, 010/087/089/090 Rear Planet To Shell (3 Tab)	1	
65247	Bearing, 010/087/089/090 Annulus Gear To Sun Gear	1	
65251	Washer, 010/087/087/090 Annulus Gear To Rear Planet (Metal, 4 Tab)	1	010-323-291A
65251A	Washer, 010/087/089/090 Annulus Gear To Rear Planet (Plastic)	1	
65273	Cup Race, 087 Pinion (Rear)	1	M88010
65273A	Cup Race, 087/089 Pinion (Front For 087) Front & Rear For 089	1-2	M86610
65273B	Cup Race, 010 Pinion & Idler (Both Sides)	4	LM67010
65274	Bearing, 087 Pinion (Rear)	1	M88048
65274A	Bearing, 087/089 Pinion (Front For 087) Front & Rear For 089	1-2	M86649
65274B	Bearing, 010 Pinion & Idler (Both Sides)	4	LM67048
65288	Cup Race, 087 Differential Carrier (Both Sides)	2	LM300811
65288A	Cup Race, 010/089 Differential Carrier (Both Sides)	2	LM29710
65289	Bearing, 087 Differential Carrier (Both Sides)	2	LM300849
65289A	Bearing, 010/089 Differential Carrier (Both Sides)	2	LM29749

PART #	GASKETS & RUBBER COMPONENTS	QTY.	REFERENCE #
65300	Gasket, 010/087/089/090 Bottom Pan (Rubber)	1	010-321-371B
65303	Lathe Cut Seal, 010/087/089/090 Differential housing To Case	1	010-409-549B
65305	Gasket, 010/087/089/090 Transmission Plate To Differential	2	

© Whatever It Takes Transmission Parts. Inc.

PART #	GASKETS & RUBBER COMPONENTS (Continued)	QTY.	REFERENCE #
65326	Gasket, 010/087/089/090 Round Filter To Valve Body	1	
65359	Gasket, 010/087/089/090 2nd Servo Piston (outer)	1	
65368	Gasket, 010/087/089/090 Speed-O Sleeve Without Cruise Control (.674"ID)	1	
65368A	Gasket, 010/087/089/090 Speed-O Sleeve With Cruise Control (.799"ID)	1	
44371A	Gasket, 010/087/089/090 Filler Tube	1	6264902

PART #	TECHNICAL MANUALS	QTY.	REFERENCE #
65400	Technical Manual, 010/087/089/090	1	83-003010TM

PART #	HARD PARTS	QTY.	REFERENCE #
65520	Stator W/Gears, 010/087/089/090 (Uses A Washer #226)	1	010-321-241A
65520A	Stator W/Gears, 010/087/089/090 (Uses A Bearing #226) Can Use 65520	1	
65529A	Converter Reactor, 087 (Need Cast #)	1	
65529B	Converter Reactor, 089 (Need Cast #)	1	
65529C	Converter Reactor, 010	1	
65543	Flange, 010/087/089/090 Inner Pump Gear Drive	1	
65544	Pump Plate, 010/087/089/090	1	010-321-279
65554	Drum, 010/087/089/090 Forward (3 Clutch) Washer Type	1	010-323-205A
65554A	Drum, 010/087/089/090 Forward (4 Clutch) Washer Type	1	010-323-205E
65554B	Drum, 010/087/089/090 Forward (5 Clutch) Bearing Type (Uses Flat Return Spring)	1	
65554C	Drum, 010/087/089/090 Forward (3 Clutch) Bearing Type	1	
65554D	Drum, 010/087/089/090 Forward (4 Clutch) Bearing Type	1	
65554E	Drum, 087 Forward (5 Clutch) Bearing Type (Uses Wire Return Spring)	1	
65555	Drum, 010/087/089/090 Direct (4 Clutch) 17 Teeth Steels	1	010-323-105B
65555A	Drum, 010/087/089/090 Direct (3 Clutch)	1	010-323-105E
65555B	Drum, 010/087/089/090 Direct (4 Clutch) 51 Teeth Steels	1	
65555C	Drum, 087 Direct (5 Clutch) (5.00"OD Frictions) 1983-Up	1	
65582	Planet, 010/087/089/090 Front (Uses 29 Teeth Sun Gear)	1	
65582A	Planet, 010/087/089/090 Front (3 Gear) (26 Teeth Sun Gear)	1	
65582AA	Planet, 010/087/089/090 Front (4 Gear) (26 Teeth Sun Gear)	1	
65582B	Planet, 010/087/089/090 Front (3 Gear) (28 Teeth Sun Gear)	1	090-323-805
65582BA	Planet, 010/087/089/090 Front (4 Gear) (28 Teeth Sun Gear)	1	
65584	Planet, 010/087/089/090 Rear (Uses 29 Teeth Sun Gear)	1	
65584A	Planet, 010/087/089/090 Rear (3 Gear) (Uses 26 Teeth Sun Gear)	1	
65584AA	Planet, 010/087/089/090 Rear (4 Gear) (Uses 26 Teeth Sun Gear)	1	
65584B	Planet, 010/087/089/090 Rear (3 Gear) (Uses 28 Teeth Sun Gear)	1	
65584BA	Planet, 010/087/089/090 Rear (4 Gear) (Uses 28 Teeth Sun Gear)	1	
65592	Ring Gear, 010/087/089/090 Front Planet With Hub (Uses 29 Teeth Sun Gear)	1	
65592A	Ring Gear, 010/087/089/090 Front Planet With Hub (Uses 26 Teeth Sun Gear)	1	
65592B	Ring Gear, 010/087/089/090 Front Planet With Hub (Uses 28 Teeth Sun Gear)	1	
65594K	Ring Gear With Hub, 010/087/089/090 Rear Annulus (Uses 29 Teeth Sun Gear)	1	
65594AK	Ring Gear With Hub, 010/087/089/090 Rear Annulus (Uses 26 Teeth Sun Gear)	1	
65594BK	Ring Gear With Hub, 010/087/089/090 Rear Annulus (Uses 28 Teeth Sun Gear)	1	
65612	Sun Gear, 010/087/089/090 (29 Teeth)	1	010-323-285
65612A	Sun Gear, 010/087/089/090 (26 Teeth)	1	010-323-285E
65612B	Sun Gear, 010/087/089/090 (28 Teeth)	1	
65622	Shell, 010/087/089/090 Driving (Uses 29 Teeth Sun Gear)	1	
65622A	Shell, 010/087/089/090 Driving (Uses 26 Teeth Sun Gear)	1	
65622B	Shell, 010/087/089/090 Driving (Uses 28 Teeth Sun Gear)	1	
65622CA	Shell, 087 Driving (Uses 28 Teeth Sun Gear) (For Large Diameter Direct Drum) 1983-Up	1	

PART #	SPRAGS & ONE WAY CLUTCHES	QTY.	REFERENCE #
65644	Sprag Assembly, 010/087/089/090 (With Lugs On OD Of Outer Race)	1	
65644A	Sprag Assembly, 010/087/089/090 (No Lugs On OD Of Outer Race)	1	
65654	Sprag, 010/087/089/090	1	
65665	Outer Race, 010/087/089/090 Sprag (With Lugs On OD)	1	
65665A	Outer Race, 010/087/089/090 Sprag (No Lugs On OD)	1	

PART #	HARD PARTS (Continued)	QTY.	REFERENCE #
65671	Pump Shaft, 010 Oil Pump (13 7/8")	1	
65671A	Pump Shaft, 087 Oil Pump (20 1/8")	1	
65671B	Pump Shaft, 089 Oil Pump (19 5/16")	1	
65671C	Pump Shaft, 090 Oil Pump (21")	1	
65671D	Pump Shaft, 087/089 Oil Pump (18 7/8")	1	

© Whatever It Takes Transmission Parts. Inc.

65673	Turbine Shaft, 010 Main (10 3/8")	1	
65673A	Turbine Shaft, 089 Main (15 3/4")	1	
65673B	Turbine Shaft, 087 Main (16 5/8")	1	
65673C	Turbine Shaft, 090 Main (18")	1	
65673D	Turbine Shaft, 087 (16 5/8") With Seal .590"ID	1	
65673E	Turbine Shaft, 087/089 Main (15 3/8")	1	
65680A	Governor Assembly, 010 (18 Teeth) Aluminum Body 1975-82	1	
65680AA	Governor Assembly, 010 (18 Teeth) Late-Steel 1983-Up	1	090-035-041
65680B	Governor Assembly, 089 (13 Teeth) Aluminum Body 1975-82	1	089-325-041B
65680BA	Governor Assembly, 089 (13 Teeth) Late-Steel 1983-Up	1	
65680C	Governor Assembly, 087 (16 Teeth) Aluminum Body 1975-82	1	087-325-041
65680CA	Governor Assembly, 087 (16 Teeth) Late-Steel 1983-Up	1	
65740	Valve Body, 010/087/089/090 (Cast # 283D)	1	
65740A	Valve Body, 010/087/089/090 (Cast # 283E)	1	
65740B	Valve Body, 010/087/089/090 (Cast # 283F)	1	
65740C	Valve Body, 010/087/089/090 (Cast # 283G)	1	
65740D	Valve Body, 010/087/089/090 (Cast # 283J)	1	
65760	Case, 010/087/089/090 (Cast # 105)	1	
65760A	Case, 010/087/089/090 (Cast # 105B)	1	
65760B	Case, 010/087/089/090 (Cast # 106D)	1	
65765	Pan, 010/087/089/090 (With Filler Tube In Case)	1	
65765A	Pan, 010/087/089/090 (With Filler Tube In Pan)	1	
65864	Snap Ring, 010/087/089/090 Holds Direct Clutch Pressure Plate In	1	
65865	Snap Ring, 010/087/089/090 Holds Direct Retainer In Drum	1	
65873	Snap Ring, 010/087/089/090 Holds Rear Ring Gear In Case	1	
65875	Snap Ring, 010/087/089/090 Holds Forward Return Spring In Drum	1	
65876	Snap Ring, 010/087/089/090 Holds Forward Clutch Pressure Plate In	1	
65885	Snap Ring, 010/087/089/090 Holds Low/Reverse Pressure Plate In Case	1	
65896	Snap Ring, 010/087/089/090 Holds Servo Cover In	1	
65905	Servo Assembly, 010/087/089/090	1	
65906	Spring, 010/087/089/090 Servo	1	
65907	Piston, 010/087/089/090 Servo	1	
65909	Cover, 010/087/089/090 Servo	1	
65919	Bolt, 010/087/089/090 Band Adjusting	1	
65922	Nut, 010/087/089/090 Band Adjusting	1	
65925	Accumulator Assembly, 010/087/089/090	1	
65926	Spring, 010/087/089/090 Accumulator	1	
65927	Piston, 010/087/089/090 Accumulator (Late Type) Molded Rubber	1	003-325-405C
65927A	Piston, 010/087/089/090 Accumulator (Early Type) With Lip Seal	1	
65958	Tube, 010/087/089/090 1st Intermediate Clutch Apply	1	
65962	Piston, 010/087/089/090 1st Intermediate Clutch (Without Check Ball) Molded Rubber	1	010-323-479A
65962A	Piston, 010/087/089/090 1st Intermediate Clutch (With Check Ball) Molded Rubber	1	010-323-512A
65964	Piston, 010/087/089/090 Forward Clutch (Molded Rubber)	1	010-323-217A
65965	Piston, 010/087/089/090 Direct Clutch (Molded Rubber)	1	010-323-121B
65972	Retainer W/Spring, 010/087/089/090 Intermediate Clutch	1	
65974	Spring, 010/087/089/090 Diaphragm Forward Clutch (8 Lug)	1	010-323-229D
65974A	Spring, 010/087/089/090 Diaphragm Forward Clutch (16 Lug)	1	010-323-229C
65974B	Spring, 087 Diaphragm Forward Clutch (Wire Type)	1	
65975	Spring, 010/087/089/090 Direct Clutch Return	1	
65985	Retainer, 010/087/089/090 Intermediate	1	
65989	Plate, 010/087/089/090 Intermediate	1	
65991	Linkage Assembly, 010/087/089/090	1	
65995	Park Pawl Assembly, 010/087/089/090	1	
65998	Cooler, 010/087/089/090 External (Cast #)	1	

© Whatever It Takes Transmission Parts. Inc.

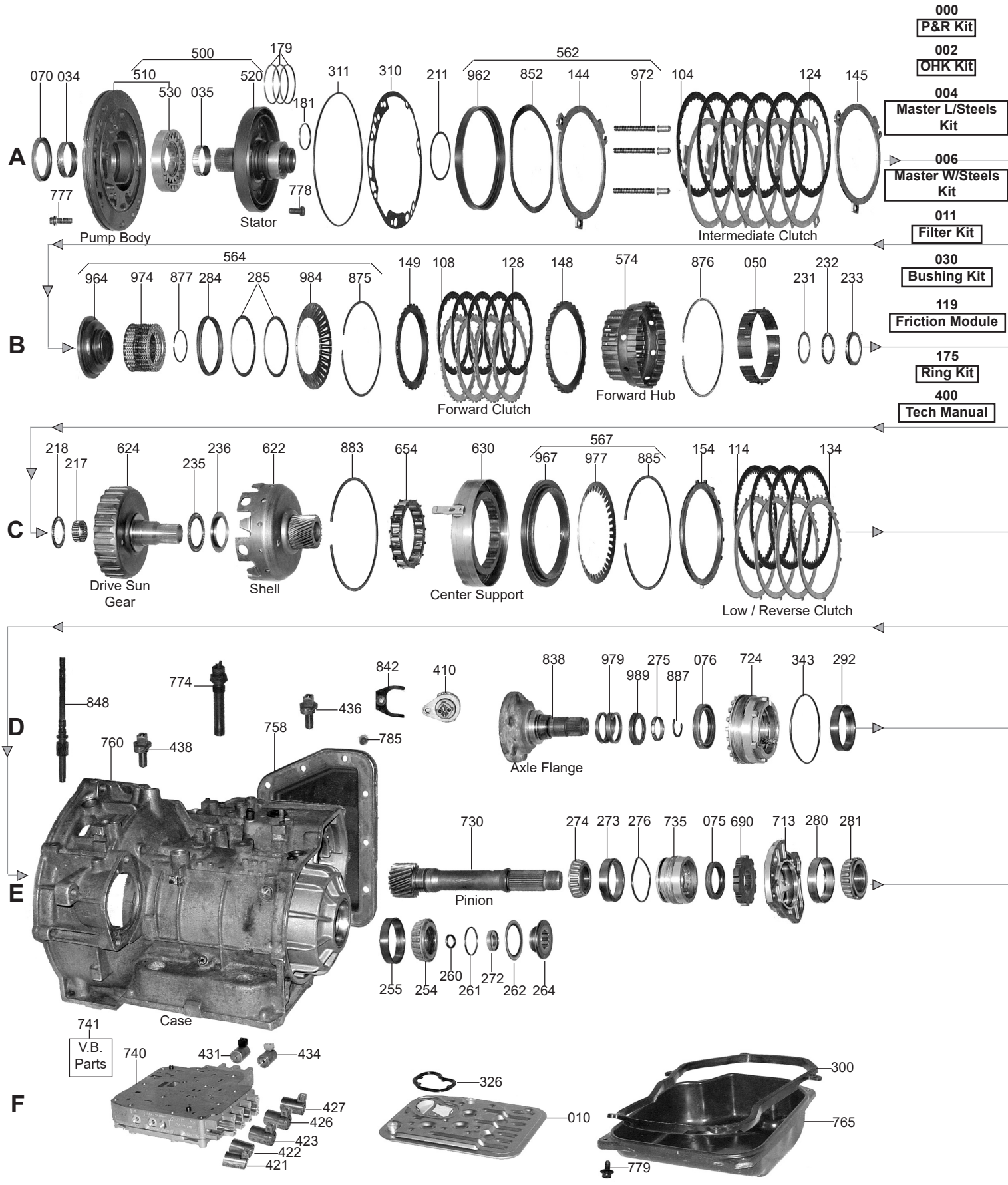

© Whatever It Takes Transmission Parts. Inc.

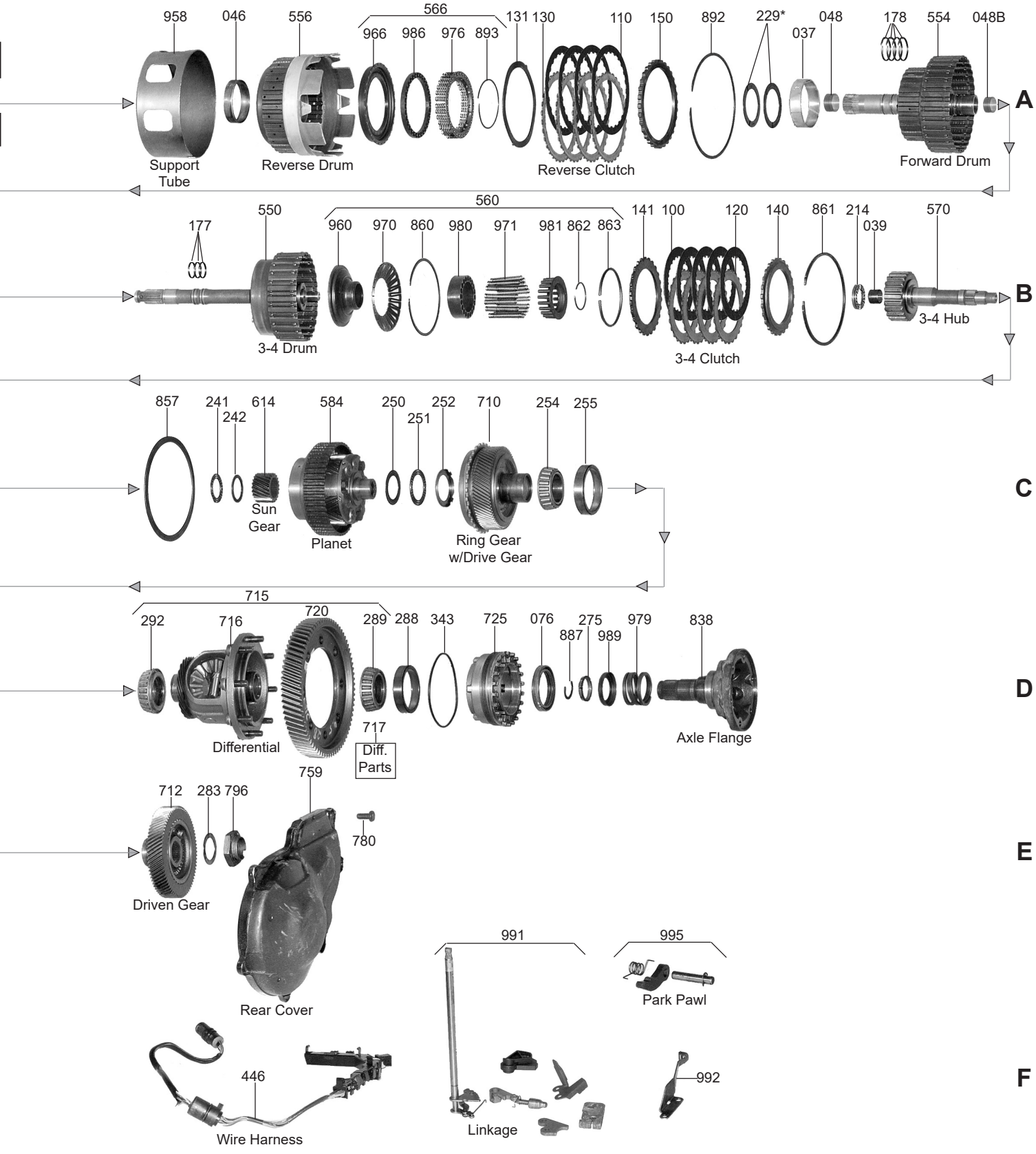

© Whatever It Takes Transmission Parts. Inc.

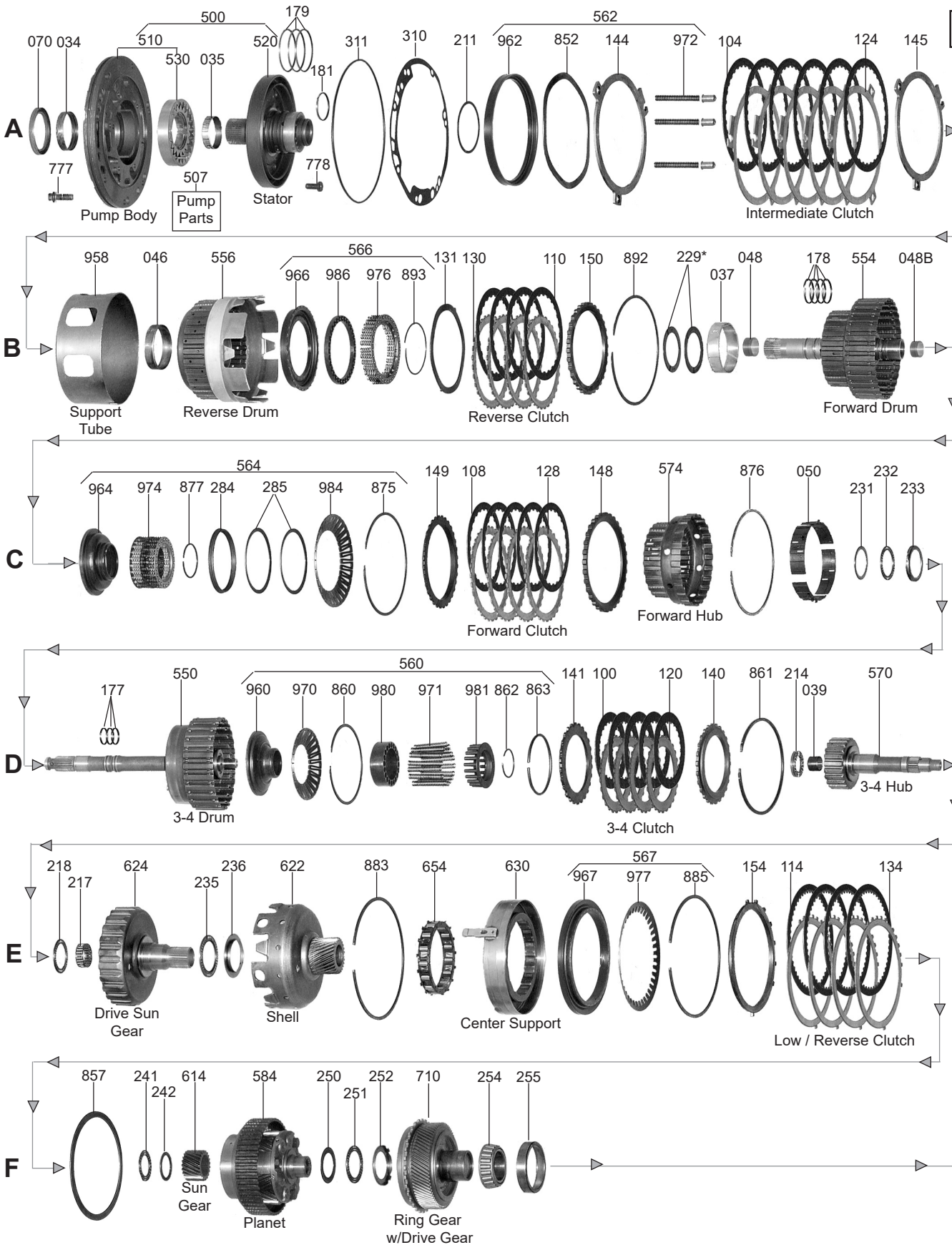

000 Paper & Rubber Kit

002 Overhaul Kit

004 Master L/Steels Kit

006 Master W/Steels Kit

011 Filter Kit

030 Bushing Kit

119 Friction Module

175 Ring Kit

400 Tech Manual

VOLKSWAGEN

© Whatever It Takes Transmission Parts. Inc.

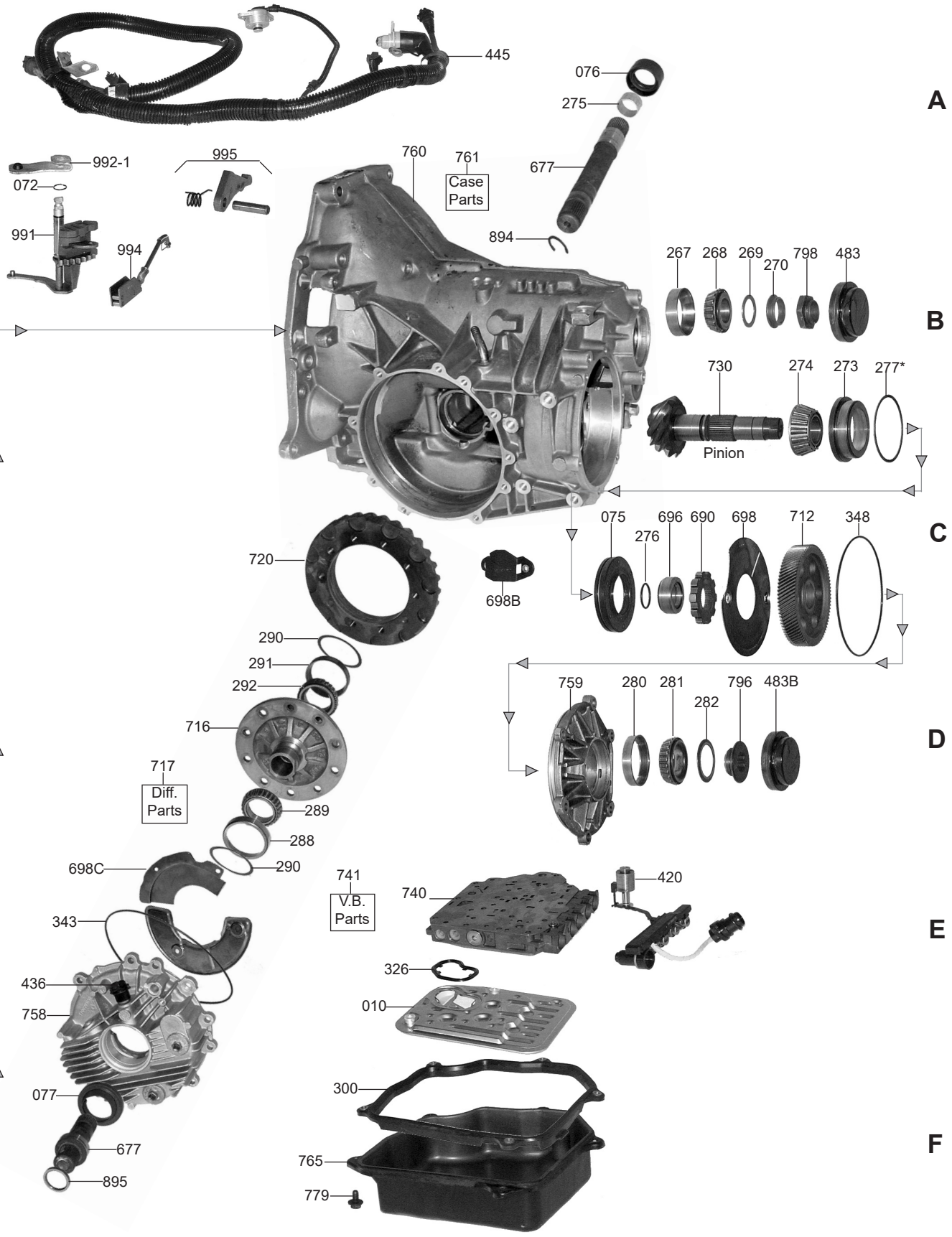

© Whatever It Takes Transmission Parts. Inc.

PART #	PAPER & RUBBER KIT	QTY.	REFERENCE #
75000A	Paper & Rubber Kit, 095/096 Without Molded Piston	1	
75000C	Paper & Rubber Kit, 097 Without Molded Pistons 1989-12/1994 (German Built)	1	
75000D	Paper & Rubber Kit, 098 Without Molded Pistons 1992-94 (German Built)	1	

PART #	OVERHAUL KITS	QTY.	REFERENCE #
75002A	Overhaul Kit, 095/096 Without Molded Piston (German & Mexican Built) 1989-Up (For Bonded Pistons Sell A75960AK Or A75960BK)	1	
75002D	Overhaul Kit, 098 1992-Up (For Bonded Pistons Sell 75960BK)	1	

PART #	MASTER L/STEEL KIT	QTY.	REFERENCE #
75004AA	Master L/Steels Kit, 095/096 1989-12/94 (German Built)(For Bonded Pistons Sell A75960AK)	1	
75004AB	Master L/Steels Kit, 096 8/1993-12/94 (Mexican Built) (Also Fits 095 1/1995-Up) With Double Sided 3-4 Frictions (Mexican And German Built)(For Bonded Pistons Sell A75960BK)	1	
75004AE	Master L/Steels KIt, 095 (01M) (With 1 Sided 3-4 Frictions) 2001-03 (For Bonded Pistons Sell A75960BK)	1	
75004CA	Master L/Steels Kit, 097 Without Molded Pistons 1989-12/1994 (German Built)	1	
75004CB	Master L/Steels Kit, 097 Without Molded Pistons 1/1993-12/1994 (Mexican Built) Also Fits 01N 1/1995-Up (All)	1	
75004DA	Master L/Steels Kit, 098 Without Molded Pistons 1992-94 (German Built)	1	
75004DB	Master L/Steels Kit, 098 Without Molded Pistons 1/1995-Up	1	

PART #	MASTER W/STEEL KIT	QTY.	REFERENCE #
75006AA	Master W/Steels Kit, 095/096 1989-12/94 (German Built)(For Bonded Pistons Sell A75960AK)	1	
75006AB	Master W/Steels Kit, 096 8/1993-12/94 (Mexican Built)(Also Fits 095 1/1995-Up (With Double Sided 3-4 Frictions)(Mexican And German Built)(For Bonded Pistons Sell A75960BK)	1	
75006AE	Master W/Steels Kit, 095 (01M) (With 1 Sided 3-4 Frictions) 2001-03 (For Bonded Pistons Sell A75960BK)	1	
75006CA	Master W/Steels Kit, 097 Without Molded Pistons 1989-12/1994 (German Built)	1	
75006CB	Master W/Steels Kit, 097 Without Molded Pistons 1/1993-12/1994 (Mexican Built) Also Fits 01N 1/1995-Up (All)	1	
75006DA	Master W/Steels Kit, 098 Without Molded Pistons 1992-94 (German Built)	1	
75006DB	Master W/Steels Kit, 098 Without Molded Pistons (Eurovan) 1/1995-Up	1	

PART #	FILTER	QTY.	REFERENCE #
75010A	Filter, 095/096/097/098 (With Molded Rubber Gasket)	1	095-325-429D
75010B	Filter, 096/098 (With Round Lip Seal Grommet) 1996-Up	1	

PART #	FILTER KIT	QTY.	REFERENCE #
75011A	Filter Kit, 095/096/097/098	1	
75011B	Filter Kit, 096 (With Lip Seal) 1996-Up	1	

PART #	BUSHINGS	QTY.	REFERENCE #
75030A	Bushing Kit, 095/096/097/098	1	
75034A	Bushing, 095/096/097/098 Pump Body	1	
75035A	Bushing, 095/096/097/098 Inner Pump Gear	1	
75037A	Bushing, 095/096/097/098 Forward Drum (Large) (Front) (To Stator)	1	
75039A	Bushing, 095/096/097/098 3-4 Hub (Pilot) (Front) (To Forward Drum)	1	
75048A	Bushing, 095/096/097/098 Forward Drum Shaft (Small) (Front)	1	
75048B	Bushing, 095/096/097/098 Forward Drum Shaft (Small) (Rear)	1	
75050A	Bushing, 095/096 (01M) Forward Hub To 3-4 Drum (Plastic) (4 Pieces) (.768” Tall)	1	
75050C	Bushing, 097/098 Forward Hub To 3-4 Drum (Plastic) (4 Pieces) (.650” Tall)	1	

PART #	METAL CLAD SEALS	QTY.	REFERENCE #
75070A	Seal, 095/096/097/098 Front	1	096-95-321-243
75072A	Seal, 095/096/097/098 Manual Shaft Lever	1	095-323-862-A
75075A	Seal, 095/096/097/098 Pinion Retainer	1	096-323-862-A
65076A	Seal, Axle (095/096 Both Sides 1989-03)(097 Drivers Side 1995-03)	1-2	
75076C	Seal, 097 Axle (Passengers Side) 1989-94	1	
75076D	Seal, 098 Axle (Both Sides) 1992-03 (Also Fits 097 Passengers Side 1995-03)	2	
75077C	Seal, 097 Axle (Drivers Side) 1989-94	1	

© Whatever It Takes Transmission Parts. Inc.

PART #	FRICTION CLUTCH	QTY.	REFERENCE #
75100A	Friction, 095/096/097/098 3-4 Clutch (K3) .063" (3.80"OD) 22 Teeth 1990-94	4-6	
75100AB	Friction, 095/096/097/098 3-4 Clutch (K3) .063" (4.05"OD) 1995-Up	4-6	
75100AC	Friction, 095/096 (01M) 3-4 Clutch (K3) (.049")(22 Internal Teeth)(1 Sided) 200-03	4-6	
75104A	Friction, 095/096/097/098 Intermediate Clutch (B2) .063" (6.10"OD) 32 Teeth 1990-Up	4-6	
75108A	Friction, 095/096/097/098 Forward Clutch (K1) .063" (4.80"OD) 24 Teeth 1990-Up (Also Fits Reverse Clutch (K2)	4-10	
75110A	Friction, 095/096/097/098 Reverse Clutch (K2) .063" (4.80"OD) 24 Teeth 1990-Up (Use 75108A)	4-5	
75114A	Friction, 095/096/097/098 Low/Reverse Clutch (B1) .063" (5.75"OD) 50 Teeth 1990-Up	4-5	
75119A	Friction Module, 095/096/097 1989-94	1	

PART #	STEEL CLUTCH	QTY.	REFERENCE #
75120A	Steel, 095/096/097/098 3-4 Clutch (K3) .079" (2.80"ID) 26 Teeth 1990-94	3-5	
75120AA	Steel, 095/096/097/098 3-4 Clutch (K3) .063" (2.80"ID) 28 Teeth 1995-Up	4-6	
75120AB	Steel, 095/096/097/098 3-4 Clutch (K3) .058" (2.80"ID) 28 Teeth 1995-Up	4-6	
75120AC	Friction, 095/096 (01M) 3-4 Clutch (K3) (.048")(28 External Teeth)(1 Sided) 2000-03	4-6	
75124A	Steel, 095/096/097/098 Intermediate Clutch (B2) .079" (5.35"ID) 3 Teeth 1990-Up	5-7	
75124AA	Steel, 095/096/097/098 Intermediate Clutch (B2) .089" (5.35"ID) 3 Teeth 1990-Up	AR	
75124AB	Steel, 095/096/097/098 Intermediate Clutch (B2) .095" (5.35"ID) 3 Teeth 1990-Up	AR	
75124AC	Steel, 095/096/097/098 Intermediate Clutch (B2) .108" (5.35"ID) 3 Teeth 1990-Up	AR	
75124AD	Steel, 095/096/097/098 Intermediate Clutch (B2) .118" (5.35"ID) 3 Teeth 1990-Up	AR	
75128A	Steel, 095/096/097/098 Forward Clutch (K1) .079" (4.10"ID) 32 Teeth 1990-Up (Also Fits Reverse Clutch (K2)	4-10	
75128AA	Steel, 095/096/097/098 Forward Clutch (K1) .057" (4.10"ID) 32 Teeth 1995-Up	4-6	
75130A	Steel, 095/096/097/098 Reverse Clutch (K2) .079" (4.10"ID) 32 Teeth 1990-Up (Use 75128A)	5	
75131A	Steel, 095/096/097/098 Reverse Clutch (Cushion) .058" (2 Teeth)	1	
75134A	Steel, 095/096/097/098 Low/Reverse Clutch (B1) .079" (5.10"OD) 12 Teeth 1990-94	4-5	
75134AA	Steel, 095/096/097/098 Low/Reverse Clutch (B1) .057" (5.10"OD) 12 Teeth 1995-Up	4-6	

PART #	CLUTCH PRESSURE PLATES	QTY.	REFERENCE #
75140A	Pressure Plate, 095/096/097/098 3-4 Clutch (Top) K3 (.125") 26 Teeth	1	
75140AA	Pressure Plate, 095/096/097/098 3-4 Clutch (Top) K3 (28 Teeth)	1	
75140AC	Pressure Plate, 095/096(01M) 3-4 Clutch (K3) Top (External Teeth)(1 Sided Friction) (Stepped) 2000-03	1	
75141A	Apply Plate, 095/096/097/098 3-4 Clutch (Bottom) K3 (26 Teeth)	1	
75141AA	Apply Plate, 095/096/097/098 3-4 Clutch (Bottom) K3 (28 Teeth)	1	
75144A	Pressure Plate, 095/096/097/098 Intermediate Clutch (Front) B2 (.108")(3 Teeth)	1	
75145A	Apply Plate, 095/096/097/098 Intermediate Clutch (Rear) B2 (.118")(3 Teeth)	1	
75148A	Pressure Plate, 095/096/097/098 Forward Clutch (Top) K1	1	
75149A	Apply Plate, 095/096/097/098 Forward Clutch (Bottom) K1	1	
75150A	Pressure Plate, 095/096/097/098 Reverse Clutch (Top) K2 .171" Thick On The ID (.188" Thick On The OD)	1	
75150AA	Pressure Plate, 095/096/097/098 Reverse Clutch (Top) K2 .121" Thick On The ID (.188" Thick On The OD)	1	
75150AB	Pressure Plate, 095/096/097/098 Reverse Clutch (Top) K2 .251" Overall Thickness	1	
75154A	Pressure Plate, 095/096/097/098 Low/Reverse Clutch (Top) B1	1	

PART #	VALVE BODY KITS	QTY.	REFERENCE #
T75165AA	Shift Kit, 095/096 (01M) Fits Units With Round Lip Seal Grommet Type Filter 1995-Up (Transgo)	1	

PART #	OIL SEALING RINGS	QTY.	REFERENCE #
75175A	Ring Kit, 095/096/097/098 1989-Up (12 Metal Rings)	1	
75177A	Ring, 095/096/097/098 Input Shaft	2	
75178A	Ring, 095/096/097/098 Turbine Shaft	4	
75179A	Ring, 095/096/097/098 Reverse Clutch	2	
75181A	Ring, 095/096/097/098 Forward Clutch	1	

© Whatever It Takes Transmission Parts. Inc.

PART #	WASHERS & BEARINGS	QTY.	REFERENCE #
75211A	Washer, 095/096/097/098 Stator To Reverse Drum (Plastic)	1	
75214A	Bearing W/Race, 095/096/097/098 3-4 Clutch Drum To 3-4 Clutch Hub	1	
75217A	Cage Bearing, 095/096/097/098 3-4 Clutch Hub To Drive Hub	1	095 323 907
75218A	Bearing, 095/096/097/098 3-4 Clutch Hub To Drive Hub	1	095 323 909
75229A	Washer, 095/096/097/098 Reverse Clutch Drum To Forward Clutch Drum (Plastic)(.045" Thick) (1.785"ID)(2.470"OD)	1	
75231A	Race, 095/096/097/098 Forward Clutch Drum To 3-4 Clutch Drum (Front)	1	095 323 165
75232A	Bearing, 095/096/0947/098 Forward Clutch Drum To 3-4 Clutch Drum	1	
75233A	Race, 095/096/097/098 Forward Clutch Drum To 3-4 Clutch Drum (Rear)	1	
75235A	Bearing, 095/096/097/098 Drive Hub To Sun Shell	1	095 323 708
75236A	Race, 095/096/097/098 Drive Hub To Sun Shell	1	095 323 714
75241A	Bearing, 095/096/097/098 Sun Shell To Rear Sun Gear (.097" Thick)(1.530"OD)(1.083"ID) 1990-92	1	095 323 727
75241AA	Bearing, 095/096/097/098 Sun Shell To Rear Sun Gear (.097" Thick)(1.602"OD)(1.083"ID) 1993-95	1	095 323 727B
75242A	Race, 095/096/097/098 Sun Shell To Rear Sun Gear	1	095 323 715
75250A	Race, 095/096/097/098 Planet To Ring Gear (Front)	1	095 323 739
75251A	Bearing, 095/096/097/098 Planet To Ring Gear	1	
75252A	Race, 095/096/097/098 Planet To Ring Gear (Rear)	1	095 323 743A
75254A	Tapered Bearing, 095/096/097/098 Ring Gear To Case	2	003 519 185
75255A	Cup Race, 095/096/097/098 Ring Gear To Case	2	
75262A	Washer, 095/096/097/098 Collar To Bearing	1	
75264A	Collar/Nut, 095/096/098 Rear Planet Ring Gear To Case Bearing	1	
75272A	Bearing W/Races, 095/096/098 Rear Planet Ring Gear To Collar/Nut	1	
75273A	Cup Race, 095/096/097/098 Pinion Bearing Cup	1	
75274A	Tapered Bearing, 095/096/097/098 Pinion	1	
75275A	Washer, 095/096/097/098 Axle Flange To Differential Housing	1	
75276A	Washer, 095/096/097/098 Park Gear To Pinion Bearing	1	
75280A	Cup Race, 095/096/097/098 Driven Transfer Gear Bearing	1	
75281A	Tapered Bearing, 095/096/097/098 Driven Transfer Gear	1	
75283A	Bearing W/Races, 095/096/097/098 Transfer Driven Gear To Bolt	1	
75284A	Spacer, 095/096/097/098 Under Forward Clutch Beveled Spring	1	
75285A	Shim, 095/096/097/098 Under Forward Clutch Beveled Spring	1	
75288A	Cup Race, 095/096/097/098 Differential Bearing Cup (Rear)	1	
75289A	Tapered Bearing, 095/096/097/098 Differential (Rear)	1	
75291A	Cup Race, 095/096/097/098 Differential Bearing Cup (Front)	1	
75292A	Tapered Bearing, 095/096/097/098 Differential (Front)	1	

PART #	GASKETS & RUBBER COMPONENTS	QTY.	REFERENCE #
75300A	Gasket, 095/096 Bottom Pan (Molded Rubber)	1	
75300C	Gasket, 097 Bottom Pan	1	
75300D	Gasket, 098 Bottom Pan (Molded Rubber)	1	
75303A	Gasket, 095/096/097/098 Differential Cover	1	
75304A	Gasket, 095/096/097/098 Transfer Gear Cover	1	
75304AW	Gasket, 095/096 (01M) Rear Cover (Molded Rubber) 1998-Up (Transfer Gear Cover)	1	
75304DW	Gasket, 098 (01P) Rear Cover (Molded Rubber) 1992-94 (Transfer Gear Cover)	1	
75304DAW	Gasket, 098 (01P) Rear Cover (Molded Rubber) 1995-Up (Transfer Gear Cover)	1	
75310A	Gasket, 095/096/097/098 Pump 1989-12/1994 (German Built)	1	
75310AA	Gasket, 095/096/097/098 Pump 1/1995-Up	1	
75311A	O-Ring, 095/096/097/098 Pump	1	
75326A	Gasket, 095/096/097/098 Filter	1	

PART #	TECHNICAL MANUALS	QTY.	REFERENCE #
75400A	Technical Manual, 095/096/097/098	1	
75400B	Technical Manual, AG4 (095/096/01M) Technical Diagnostic Guide	1	
75401A	Manual On CD, 095/096/097/098	1	

PART #	ELECTRICAL COMPONENTS	QTY.	REFERENCE #
75410A	PRNDL Switch, 095/096/098 (7 Prong) (1 Bolt) (Cast # 095 919 823A)	1	
75410B	PRNDL Switch, 095/096/098 (7 Prong) (1 Bolt) (Cast # 095 919 823B)	1	
75410F	PRNDL Switch, 095/096/098 (7 Prong) (1 Bolt) (Cast # 095 919 823F)	1	
75421A	Solenoid, 095/096/097/098 Shift (White Or Black Connector)(Takes 5 Or 6 Per Transmission)	5-6	
75431A	Solenoid, 095/096 EPC/Lock-Up (Tan Connector)(Takes 1 Or 2 Per Transmission)	1-2	
75436A	Sensor, 095/096 Output Speed (2 Pin, Rectangular Connector)1990-04 (Also Fits 095/096/01M Input Speed Sensor # 438 1990-04)	1-2	

© Whatever It Takes Transmission Parts. Inc.

75436AA.....Sensor, 095/096 Output Speed With 12" Wire Harness 1999-06 .....1 .....
75438A.....Sensor, 095/096 Input Speed (2 Pin, Half Round "D" Connector) 1999-05 .....1 .....
75446A.....Internal Wire Harness With Case Connector, 095/096/097/098 (Brass Strap Type) The Brass
.....Strap From The Case Connector Has A 90 Degree Bend & T's Into Center Of Solenoid
.....Connector Brass Strap (Use 75446BK) .....1 .....
75446AB.....Internal Wire Harness With Case Connector, 095/096/097/098 (Brass Strap Type) The Brass
.....Strap From The Case Connector Is Straight & Elbows 90 Degrees In The End Of Solenoid
.....Connector Brass Strap (Use 75446BK) .....1 .....
75446B.....Internal/External Wire Harness With Pass Through Case Connector, 095/096/097/098
.....(Brass Strap Type) The External Wire Harness Is 17 3/4" Long Between Pass Through
.....Connector & External Connectors (Use 75446BK) .....1 .....
75446BB.....Internal/External Wire Harness With Pass Through Case Connector, 095/096/097/098
.....(Brass Strap Type) The External Wire Harness Is 12" Long Between Pass Through Connector
.....& External Connectors (Use 75446BK).....1 .....
75446BK.....Replacement Internal/External Wire Harness, 095/096/097 & Some 098 (Eliminates The OE
.....Brass Strap Type Harness) Has The 17 3/4" Long External Harness Between Case Connector
.....And External Connector .....1 .....

PART #	MISC. COMPONENTS	QTY.	REFERENCE #

75490A.....Vent, 095/096/097/098 Case.....1 .....
75491A.....Vent, 095/096/097/098 Differential.....1 .....

PART #	HARD PARTS	QTY.	REFERENCE #

75500A.....Pump Complete, 095/096/097/098 .....1 .....
75510A.....Pump Body W/Gears, 095/096/097/098 (Cast # 095 321 247B) .....1 .....
75510B.....Pump Body W/Gears, 095/096/097/098 (Cast # 01M 321 247).....1 .....
75520A.....Stator, 095/096/097/098 With 4 Large Holes & 1 Small Hole Inside Tube (No Check
.....Valves On Flat Surface Of Stator).....1 .....
75520AA.....Stator, 095/096/097/098 With 4 Large Holes & 1 Small Hole Inside Tube (With 1 Check Valve
.....On Flat Surface Of Stator) .....1 .....
75520B.....Stator, 095/096/097/098 With 10 Feed Holes Inside Tube.....1 .....
75520C.....Stator, 095/096/097/098 With 4 Large Holes & 1 Small Hole Inside Tube (With 3 Check
.....Valves On Flat Surface Of Stator).....1 .....
75550A.....Drum, 095/096/097/098 3-4 Clutch With Solid Shaft (5 Clutch) 26 Teeth Steels (.655"OD At
.....Front End Of Shaft) 1989-94.....1 .....
75550AB.....Drum, 095/096/097/098 3-4 Clutch With Solid Shaft (4 Clutch) 28 Teeth Steels (.655"OD At
.....Front End Of Shaft) 1989-94.....1 .....
75550AC.....Drum, 095/096/097/098 3-4 Clutch With Solid Shaft (5 Clutch) 28 Teeth Steels (.655"OD At
.....Front End Of Shaft) 1989-94.....1 .....
75550B.....Drum, 095/096/097/098 3-4 Clutch With Hollow Shaft (4 Or 5 Clutch) 28 Teeth Steels (1.040"OD
.....At End Of Shaft With Bushing On The Inside) 1995-Up .....1 .....
75550BA.....Drum, 095/096/097/098 3-4 Clutch With Hollow Shaft (4 Or 5 Clutch) 28 Teeth Steels (1.040"OD
.....At End Of Shaft With No Bushing On The Inside) 1995-Up.....1 .....
75550BB.....Drum, 095/096/097/098 3-4 Clutch With Hollow Shaft (6 Clutch) 28 Teeth Steels (1.040"OD
.....At Front End Of Shaft With Bushing On The Inside) 1995-Up .....1 .....
75550BC.....Drum, 095/096/097/098 3-4 Clutch With Hollow Shaft (6 Clutch) 28 Teeth Steels (1.040"OD At
.....Front End Of Shaft No Bushing On The Inside) 1995-Up .....1 .....
75554A.....Drum, 095/096/097/098 Forward With Shaft (5 Clutch) 1990-95 (Uses A Bellville Spring)
.....Used With 75550A .....1 .....
75554AA.....Drum, 095/096/097/098 Forward With Shaft (5 Clutch) 1990-95 (Does Not Use A Bellville
.....Spring) Used With 75550AB & 75550AC.....1 .....
75554B.....Drum, 095/096/097/098 Forward Less Shaft 1996-Up .....1 .....
75556A.....Drum, 095/096/097/098 Reverse Clutch (5 Clutch) .....1 .....
75560A.....Piston Kit, 095/096/097/098 3-4 Clutch (With Multiple Springs) .....1 .....
75560B.....Piston Kit, 095/096/097/098 3-4 Clutch (With 1 Large Spring) .....1 .....
75564A.....Piston Kit, 095/096/097/098 Forward Clutch 1990-95 (With Bellville Spring) .....1 .....
75564AA.....Piston Kit, 095/096/097/098 Forward Clutch 1990-95 (Does Not Use A Bellville Spring).....1 .....
75564B.....Piston Kit, 095/096/097/098 Forward Clutch 1996-Up.....1 .....
75566A.....Piston Kit, 095/096/097/098 Reverse Clutch .....1 .....
75570A.....Clutch Hub, 095/096/097/098 3-4 Clutch Hub With Solid Shaft (Fits 75622A Shell With 24 Teeth
.....Sun Gear).....1 .....
75570AA.....Clutch Hub, 095/096/097/098 3-4 Clutch Hub With Solid Shaft (Fits 75622AA Shell With
.....27 Teeth Sun Gear).....1 .....
75574A.....Clutch Hub, 095/096/097/098 Forward Clutch .....1 .....

© Whatever It Takes Transmission Parts. Inc.

PART #	HARD PARTS (Continued)	QTY.	REFERENCE #
75584A	Planet, 095/096/097/098 Rear (Sun Gear #614 Does Not Come With The Planet, It Slides Out)	1	
75584B	Planet, 095/096/097/098 Rear (With Sun Gear #614) The Sun Gear #614 Stays In The Planet	1	
75614A	Sun Gear, 095/096/097/098 Rear (21 Teeth)	1	
75622A	Shell, 095/096/097/098 With Sun Gear (27 Teeth)	1	
75622AA	Shell, 095/096/097/098 With Sun Gear (27 Teeth) 1.890”OD Where Gear Rides	1	
75624A	Hub, 095/096/097/098 Drive With Hollow Shaft (Fits 75622A Shell With 24 Teeth Sun Gear)	1	
75624AA	Hub, 095/096/097/098 Drive With Hollow Shaft (Fits 75622AA Shell With 27 Teeth Sun Gear)	1	
75630A	Center Support, 095/096/097/098 Rear	1	

PART #	SPRAGS & ONE WAY CLUTCHES	QTY.	REFERENCE #
75654AA	Sprag, 095/096/097/098 Rear	1	

PART #	HARD PARTS (Continued)	QTY.	REFERENCE #
75690A	Gear, 095/096/097/098 Park (10 Teeth)	1	
75710A	Gear, 095/096/097/098 Transfer Drive With Ring Gear (62 Teeth)(No Groove)	1	
75710AA	Gear, 095/096/097/098 Transfer Drive With Ring Gear (62 Teeth)(2 Groove)	1	
75710B	Gear, 095/096/097/098 Transfer Drive With Ring Gear (71 Teeth)	1	
75710C	Gear, 095/096/097/098 Transfer Drive With Ring Gear (72 Teeth)	1	
75710D	Gear, 095/096/097/098 Transfer Drive With Ring Gear (75 Teeth)	1	
75710E	Gear, 095/096/097/098 Transfer Drive With Ring Gear (45 Teeth) (.745” Thick)	1	
75710EA	Gear, 095/096/097/098 Transfer Drive With Ring Gear (45 Teeth) (.930” Thick)	1	
75710F	Gear, 095/096/097/098 Transfer Drive With Ring Gear (61 Teeth)(Fits Driven Gear #712F With 4.700”OD)	1	
75710FA	Gear, 095/096/097/098 Transfer Drive With Ring Gear (61 Teeth)(Fits Driven Gear #712FA With 4.670”OD)	1	
75712A	Gear, 095/096/097/098 Transfer Driven (75 Teeth)	1	
75712B	Gear, 095/096/097/098 Transfer Driven (61 Teeth)	1	
75712C	Gear, 095/096/097/098 Transfer Driven (51 Teeth)	1	
75712D	Gear, 095/096/097/098 Transfer Driven (44 Teeth)(.828” Thick)	1	
75712DA	Gear, 095/096/097/098 Transfer Driven (44 Teeth)(.750” Thick)	1	
75712E	Gear, 095/096/097/098 Transfer Driven (73 Teeth)	1	
75712F	Gear, 095/096/097/098 Transfer Driven (63 Teeth)(4.700”OD)	1	
75712FA	Gear, 095/096/097/098 Transfer Driven (63 Teeth)(4.670”OD)	1	
75713A	Retainer, 095/096/097/098 Aluminum 4 Bolt	1	
75715A	Differential W/Ring Gear, 095/096/097/098 (76 Teeth, No Groove)(22 Roller Bearing On Both Sides)	1	
75715AA	DifferentIal W/Ring Gear, 095/096/097/098 (76 Teeth, No Groove)(23 Roller Bearing On Speed-O Side)(24 Roller Bearing On Ring Gear Side)	1	
75715B	Differential W/Ring Gear, 095/096/097/098 (68 Teeth, 5 Groove)(24 Roller Bearing On Both Sides)	1	
75715C	Differential W/Ring Gear, 095/096/097/098 (78 Teeth, 2 Groove)(24 Roller Bearing On Both Sides)	1	
75715D	Differential W/Ring Gear, 095/096/097/098 (64 Teeth, 4 Groove)(24 Roller Bearing On Both Sides)	1	
75715E	Differential W/Ring Gear, 095/096/097/098 (74 Teeth, 3 Groove)(23 Roller Bearing On Both Sides)	1	
75715EA	Differential W/Ring Gear, 095/096/097/098 (74 Teeth, 3 Groove)(23 Roller Bearing On Speed-O Side)(24 Roller Bearing On Ring Gear Side)	1	
75716A	Differential Housing, 095/096/097/098 Less Ring Gear	1	
75720A	Ring Gear, 095/096/097/098 Differential (76 Teeth)	1	
75724A	Retainer, 095/096/097/098 Differential Bearing (Front)	1	
75725A	Retainer, 095/096/097/098 Differential Bearing (Rear)	1	
75730A	Pinion, 095/096/097/098 (18 Teeth)	1	
75735A	Retainer, 095/096/097/098 Pinion Bearing (Aluminum)	1	
T-75735A	Tool, 095/096/097/098 Pinion Bearing Retainer Remover Tool (Unscrews Aluminum Retainer # 735 From Case)	1	
75740A	Valve Body, 095/096/097/098 (01M/01N/01P)(With Kidney Shaped Filter Hole)(Must Go By Date On Main Valve Body Section) 1990-94	1	
75740AA	Valve Body, 095/096/097/098 (01M/01N/01P)(With Round Filter Hole)(Must Go By Date On Main Valve Body Section) 1997-98 (Fully Tested With All Necessary Sonnax Replacement Valves)	1	
75740AB	Valve Body, 095/096/097/098 (01M/01N/01P) (With Round Filter Hole) 1997-98 (VBX)	1	
75740AC	Valve Body, 095/096/097/098 (01M/01N/01P) (With Round Filter Hole)(Must Go By Date On Main Valve Body Section) 1999-Up (Fully Tested With All Necessary Sonnax Replacement Valves)	1	

© Whatever It Takes Transmission Parts. Inc.

PART #	VALVE BODY COMPONENTS	QTY.	REFERENCE #
S74741AAK	Valve Assembly, 095/096/097/098 Main Regulator (Contains: Oversize Valve, Springs & End Plug With O-Rings) (Sonnax)(Must Use T-F-119940-TL3)	1	
S75741CK	TCC Boost Valve, Sleeve & Spring, 095/096/097/098 (Sonnax)	1	
S75741CK	Spring Kit, 01M/01N/01P TCC Regulator Valve (5 Pieces) (Sonnax)	1	
S75741CAK	Valve Assembly, 095/097/097/098 TCC Apply (Contains: Oversize TCC Apply Valve, Spring, TCC Boost Valve & Sleeve)(Sonnax) (Must Use Tool T-119940-TL4)	1	
T-119940-TL4	Tool For S75741CAK	1	
S75741-6K	Shift Cup Kit, 095/096/097/098 (Valve End Plugs)(Contains 2 Medium, 4 Small & 1 Large Shift Cup) (Sonnax)	1	
T-VB-FIX	Valve Body Reaming Fixture (Sonnax)	1	
S75741H-3K	Spring Set, 095/096/097/098 Check Ball Springs (10 Pieces Per Set)(Sonnax)	1	
S75741LA	Valve, 095/096/097/098 Oversize Solenoid Valve (Sonnax)(Must Use T-F-119940-TL6)	1	
S75741PAK	Sure Cure KIt, 096/097/098 (AG4 Phase 0 & 1 Units)(Sonnax) (Must Use Tools T-F-119940-TL7, T-F-119940-TL8, T-F-119940-TL6 & T-VB-FIX)	1	
T-F-119940-TL5	Tool For S75741PBK & S75741TK	1	
T-F-119940-TL6	Tool For S75741PAK & S74741PBK	1	
T-F-119940-TL7	Tool For S74741PAK	1	
T-F-119940-TL8	Tool For S74741PAK	1	
S75741PBK	Sure Cure Kit, 01M/01N/01P (AG4 Phase 2 Units)(Sonnax) (Must Use Tools T-F-119940-TL3, T-119940-TL4, T-F-11940-TL5, T-F-119940-TL6 & T-VB-FIX)	1	
T-119940-TL4	Tool For S75741CAK & S74741PBK	1	
T-F-119940-TL3	Tool For S74741PBK	1	
T-F-119940-TL5	Tool For S74741PBK	1	
S75741T-6	End Plug, 095/096/097/098 Boost Valve (Ratcheting)(Sonnax)	1	
S75741TK	Valve Assembly, 095/096/097/098 Boost Regulator Valve & Plug (Sonnax)(Must Use Tool #T-F-119940-TL5)	1	

PART #	HARD PARTS (Continued)	QTY.	REFERENCE #
75758A	Cover, 095/096/097/098 Differential	1	
75759A	Cover, 095/096/097/098 Rear	1	
75760A	Case, 095/096/097/098 (Cast # 096 321 105AE)	1	
75760AE	Case, 095/096 (01M)(Cast # 01M 321 105 E)	1	
75760AF	Case, 095/096 (01M)(Cast # 01M 321 105 F)	1	
75760AL	Case, 095/096 (01M)(Cast # 01M 321 105 L)	1	
75760AQ	Case, 095/096 (01M)(Cast # 01M 321 105 Q)	1	
75765	Pan, 095/096/097/098 Bottom With Drain Plug	1	
75765A	Pan, 095/096/097/098 Bottom No Drain Plug	1	
75774A	Housing, 095/096/098 Driven Speed-O (Black Plastic) (3 Blade Rectangle Connector Is 1/2” Tall)	1	
75774AA	Housing, 095/096/098 Driven Speed-O (Black Plastic) (3 Blade Oval Connector Is 1” Tall)	1	
75792AK	Bolt Set, 095/096/097/098 Holds Cooler To Case	1	
75796A	Nut, 095/096/097/098 For Driven Gear	1	
75838A	Axle Flange, 095/096/097/098	1	
75842A	Bracket, 095/096/097/098 Holds Driven Speed-O Housing On	1	
75852A	Cushion, 095/096/097/098 Intermediate Clutch	1	
75857A	Cushion, 095/096/097/098 Low/Reverse Clutch	1	
75860A	Snap Ring, 095/096/097/098 Holds Beveled Spring In	1	
75861A	Snap Ring, 095/096/097/098 Holds Top Pressure Plate In 3-4 Drum	1	
75862A	Snap Ring, 095/096/097/098 Holds 3-4 Clutch Retainer In	1	
75863A	Snap Ring, 095/096/097/098 Under 3-4 Bottom Pressure Plate	1	
75875A	Snap Ring, 095/096/097/098 Holds Forward Beveled Spring In Drum	1	
75877A	Snap Ring, 095/096/097/098 Holds Forward Return Spring In Drum	1	
75883A	Snap Ring, 095/096/097/098 Holds Center Support In Case	1	
75887A	Snap Ring, 095/096/097/098 Holds Axle Flange To Differential	1	
75892A	Snap Ring, 095/096/097/098 Holds Reverse Pressure Plate In Drum (.057”)	1	
75892AA	Snap Ring, 095/096/097/098 Holds Reverse Pressure Plate In Drum (.064”)	1	
75892AB	Snap Ring, 095/096/097/098 Holds Reverse Pressure Plate In Drum (.071”)	1	
75893A	Snap Ring, 095/096/097/098 Holds Return Spring Retainer In Reverse Drum	1	
75958A	Tube, 095/096/097/098 Intermediate Support	1	
75960A	Piston, 095/096/097/098 3-4 Clutch (K3) (Bonded) 1990-94	1	
75960AK	Piston Kit, 095/096/097/098 (Bonded)(5 Pistons) 8/1993-12/1994	1	
75960B	Piston, 095/096/097/098 3-4 Clutch (K3) (Bonded) 1995-Up	1	
75960BK	Piston Set, 095/096/097/098 (Bonded)(7 Pistons) 1/1995-Up	1	
75962A	Piston, 095/096/097/098 Intermediate Clutch (B2)(Bonded) 1990-Up	1	

© Whatever It Takes Transmission Parts. Inc.

PART #	HARD PARTS (Continued)	QTY.	REFERENCE #
75964A	Piston, 095/096/097/098 Forward Clutch (K1)(Bonded) 1990-94	1	
75964B	Piston, 095/096/097/098 Forward Clutch (K1)(Bonded) 1995-Up	1	
75966A	Piston, 095/096/097/098 Reverse Clutch (Bonded) 1989-Up	1	
75967A	Piston, 095/096/097/098 Low/Reverse Clutch (B1)(Bonded) 1990-Up	1	
75970A	Beveled Spring, 095/096/097/098 3-4 Clutch Return	1	
75971A	Spring, 095/096/097/098 3-4 Clutch Return	1	
75972A	Retainer W/Springs, 095/096/097/098 Intermediate Clutch	1	
75974A	Retainer W/Springs, 095/096/097/098 Forward Clutch	1	
75976A	Retainer W/Springs, 095/096/097/098 Reverse Clutch	1	
75977A	Diaphram Spring, 095/096/097/098 Axle Flange	1	
75979A	Spring, 095/096/097/098 Axle Flange	1	
75980A	Retainer, 095/096/097/098 3-4 Clutch Spring (Bottom)	1	
75981A	Retainer, 095/096/097/098 3-4 Clutch Spring (Top)	1	
75981B	Retainer, 095/096/097/098 3-4 Clutch Spring (K3) (Bonded) 1995-Up	1	
75984A	Diaphram Spring, 095/096/097/098 Forward Clutch	1	
75984B	Retainer, 095/096/097/098 Forward Clutch Spring (Bonded) 1995-Up	1	
75986A	Seat, 095 Reverse Clutch Spring	1	
75988A	Cooler, 095/096/097/098 External (Mounts To Case)	1	
75989A	Retainer, 095/096/097/098 Axle Spring	1	
75991A	Linkage Assembly, 095/096/097/098 Internal	1	
75995A	Park Pawl Assembly, 095/096/097/098	1	
S75998A-4K	Remote Cooler Adapter, 096/097/098 (Sonnax)(Replaces Oil Cooler On Top Of Transmission For Use With External Cooler	1	

© Whatever It Takes Transmission Parts. Inc.

© Whatever It Takes Transmission Parts. Inc.

PART #	PAPER & RUBBER KIT	QTY.	REFERENCE #
165000	Paper & Rubber Kit, 003 1969-75	1	

PART #	OVERHAUL KITS	QTY.	REFERENCE #
165002	Overhaul Kit, 003 1969-75	1	

PART #	MASTER L/STEEL KIT	QTY.	REFERENCE #
165004	Master L/Steels Kit, 003 1969-75	1	

PART #	MASTER W/STEEL KIT	QTY.	REFERENCE #
165006	Master W/Steels Kit, 003 1969-75	1	

PART #	FILTER	QTY.	REFERENCE #
165010	Filter, 003 1968-76	1	003-325-421

PART #	FILTER KIT	QTY.	REFERENCE #
165011	Filter Kit, 003 1968-76	1	

PART #	BANDS	QTY.	REFERENCE #
165022	Band, 003 2nd Gear	1	003-323-461
165024	Band, 003 Low/Reverse	1	003-323-411

PART #	BUSHINGS	QTY.	REFERENCE #
165030	Bushing Kit, 003	1	
165031	Bushing , 003 Converter Hub (Use 65035)	1	003-323-611
65032	Bushing , 003 Converter Reactor (Also Fits Forward Clutch Hub)	1-3	003-519-074
65035	Bushing , 003 Pump Drive Gear (Also Fits Convertor Hub)	1-2	003-323-611
65037	Bushing , 003 Stator	1	003-321-254
165046	Bushing , 003 Direct Drum	1	003-323-115
165050	Bushing , 003 Forward Clutch Hub (Use 65032)	2	003-519-074
165052	Bushing , 003 Sun Gear	1	003-323-289
165060	Bushing , 003 Rear Ring Gear	1	003-323-373

PART #	METAL CLAD SEALS	QTY.	REFERENCE #
165070	Seal, 003 Front 1969-75	1	003-419-089D
165075	Seal, 003 Governor Shaft 1969-75	1	003-507-125A
165075A	Seal, 003 Final Drive 0969-75	2	003-507-269A
165075B	Seal, 003 Pinion 1965-75	1	010-409-085D

PART #	FRICTION CLUTCH	QTY.	REFERENCE #
165106A	Friction, 003 Direct Clutch (.091")	2-3	
165108B	Friction, 003 Forward Clutch (.060")	3	
165119	Friction Module, 003	1	

PART #	STEEL CLUTCH	QTY.	REFERENCE #
165126A	Steel, 003 Direct & Reverse Clutch (.079") 1969-75 (Also Fits Forward Clutch)	4-5	003-323-139
165139A	Steel Module, 003 (Volkswagen) 1969-76	1	

PART #	CLUTCH PRESSURE PLATES	QTY.	REFERENCE #
165146	Pressure Plate, 003 Forward & Direct Clutch (.062")	1	
165146A	Pressure Plate, 003 Forward & Direct Clutch (.076")	1	
165146B	Pressure Plate, 003 Forward & Direct Clutch (.090")	1	
165146C	Pressure Plate, 003 Forward & Direct Clutch (.104")	1	

PART #	MODULATORS	QTY	REFERENCE #
165160	Modulator, 003 1969-75	1	

© Whatever It Takes Transmission Parts. Inc.

PART #	OIL SEALING RINGS	QTY.	REFERENCE #
165175	Ring Kit, 003	1	
65181	Ring, 003 Forward & Direct Clutch	4	

PART #	WASHERS & BEARINGS	QTY.	REFERENCE #
165211	Washer, 003 Pump To Direct Drum (2 Tabs)	1	
165229	Washer, 003 Pump To Forward Drum (3 Tabs)	1	
165230	Washer, 003 Pump To Forward Drum (2 Tabs)	1	
165232	Washer, 003 Forward Drum To Forward Hub	1	
165247	Washer, 003 Planet (Front)	1	
165251	Washer, 003 Planet (Rear)	1	

PART #	GASKETS & RUBBER COMPONENTS	QTY.	REFERENCE #
165300	Gasket, 003 Bottom Pan	1	
165304	Gasket, 003 Plate To Differential Housing	1	
165319	Gasket, 003 Drain Plug (Metal)	1	
165324	Gasket, 003 Plate To Case	1	
165325	Gasket, 003 Axle Flange To Differential Housing	1	
165327	Gasket, 003 Modulator (Metal)	1	
44371A	O-Ring, 003 Filler Tube	1	6264902

PART #	TECHNICAL MANUALS	QTY.	REFERENCE #
65400	Technical Manual, 003	1	

PART #	HARD PARTS	QTY.	REFERENCE #
165520	Pump Assembly, 003	1	
165530	Pump Gear, 003	1	
165544	Pump Plate, 003	1	
165554	Drum, 003 Forward Clutch	1	
165555	Drum, 003 Direct Clutch	1	
165584	Planet Assembly, 003	1	

PART #	SPRAGS & ONE WAY CLUTCHES	QTY.	REFERENCE #
165654	Sprag, 003	1	

© Whatever It Takes Transmission Parts. Inc.

AWTR60SN (09D)

FWD 6 Speed

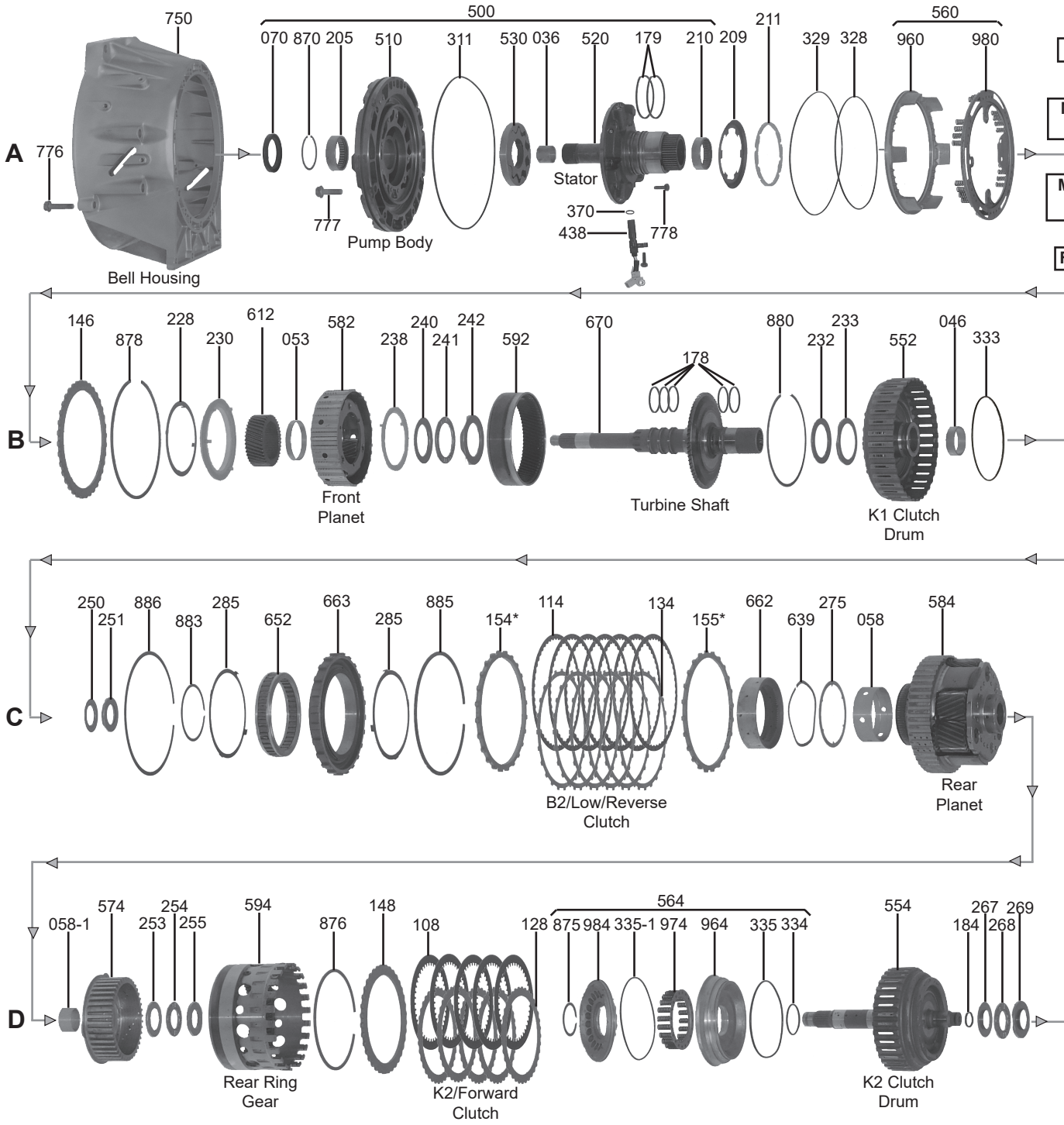

VOLKSWAGEN

© Whatever It Takes Transmission Parts. Inc.

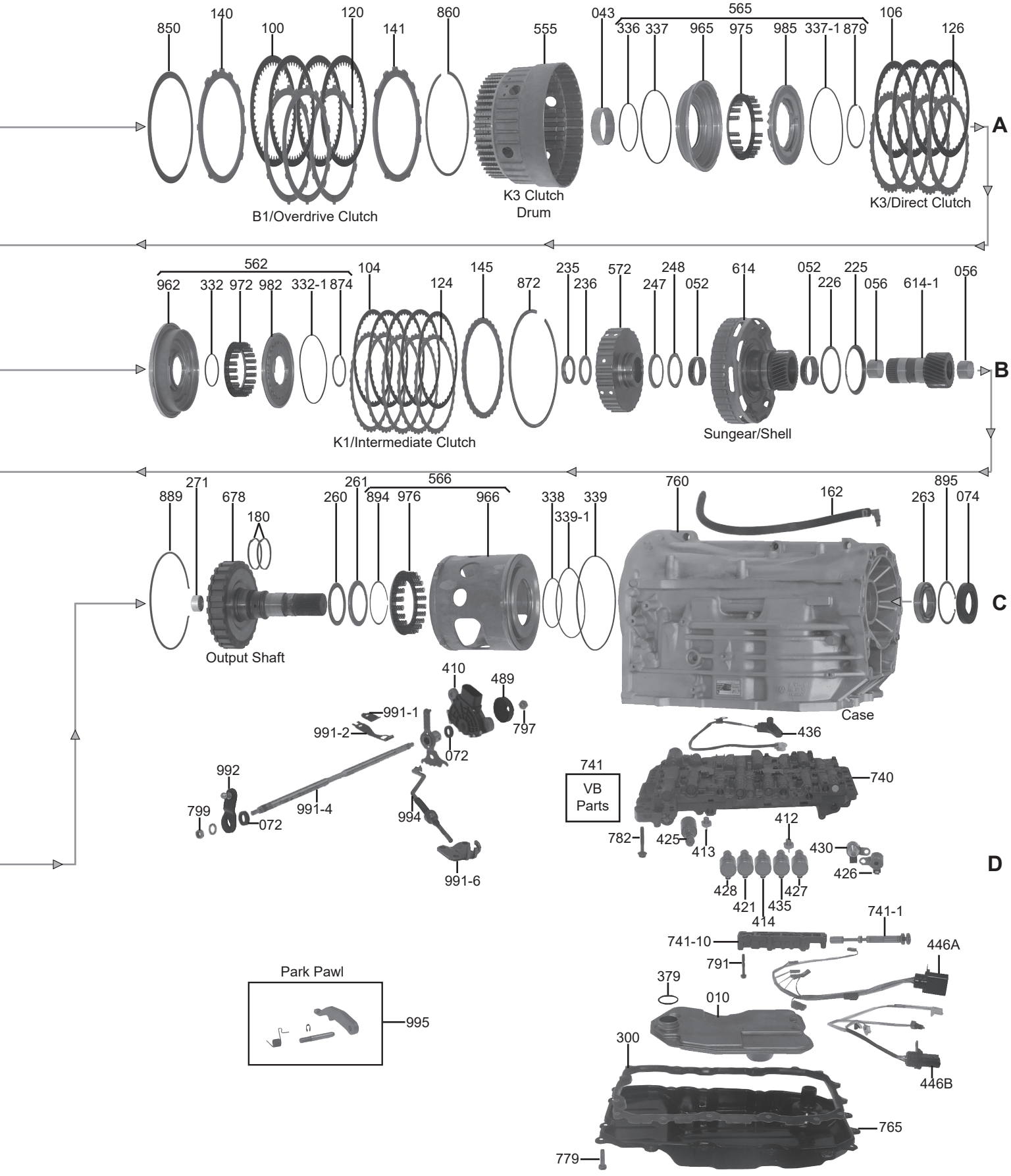

© Whatever It Takes Transmission Parts. Inc.

PART #	OVERHAUL KITS	QTY	REFERENCE #
235002A	Overhaul Kit, AWTR60SN (VW 09D)(6 Spd RWD/AWD) 2002-Up	1	
T235002A	Overhaul Kit, AWTR60SN (VW 09D)(6 Spd RWD/AWD) 2002-Up (Transtec)	1	

PART #	MASTER L/STEELS KIT	QTY	REFERENCE #
235004A	Master L/Steels Kit, AWTR60SN (VW 09D)(6 Spd RWD/AWD)(V-6 Only)2002-Up	1	
235004AA	Master L/Steels Kit, AWTR60SN (VW 09D)(6 Spd RWD/AWD)(All Except V-6)02-Up	1	

PART #	MASTER W/STEELS KITS	QTY	REFERENCE #
235006A	Master W/Steels Kit, AWTR60SN (VW 09D)(6 Spd RWD/AWD)(V-6 Only)2002-Up	1	
235006AA	Master W/Steels Kit, AWTR60SN (VW 09D)(6 SPD RWD/AWD)(V-8 Only) 2002-Up	1	

PART #	FILTERS	QTY	REFERENCE #
235010A	Filter, AWTR60SN (09D) (Aluminum)(Oval Opening On Top) 2002-Up	1	

PART #	BUSHINGS	QTY	REFERENCE #
235030A	Bushing Kit, AWTR60SN (VW 09D) 2002-Up	1	
235036A	Bushing, AWTR60SN (09D) Stator (.969"OD)(.839"ID) 2002-Up	1	
235043A	Bushing, AWTR60SN (09D) K3 Clutch Drum (2.510"OD)(2.430"ID) 2002-Up	1	
235046A	Bushing, AWTR60SN (09D) K1 Clutch Drum (Rear)(1.347"ID) 2002-Up	1	
235052A	Bushing, AWTR60SN (09D) Large Sungear Shell Assembly (Top & Bottom) 2002-Up	2	
235053A	Bushing, AWTR60SN (09D) Front Planet (2.880"ID)(2.998"OD) (2 Grooves) 2002-Up	1	
235056A	Bushing, AWTR60SN (09D) Sungear (Top & Bottom) (1.248"OD) 2002-Up	1	
235058A	Bushing, AWTR60SN (09D) Rear Planetary (Top)(1 1/8" Tall) (2.875"OD)(2.766"ID) 2002-Up	1	
235058A-1	Bushing, AWTR60SN (09D) Rear Planetary (Bottom)(3/4"Tall) (1.264"OD)(1.119"ID) 2002-Up	1	

PART #	METAL CLAD SEALS	QTY	REFERENCE #
235070A	Seal, AWTR60SN (09D) Pump 2002-Up	1	
235072A	Seals, AWTR60SN (09D) Manual Shaft (.873"OD)(.283"Thick) 2002-Up	2	
235074A	Seal, AWTR60SN (09D) Extension Housing 2002-Up	1	

PART #	FRICTION CLUTCHS	QTY	REFERENCE #
235100A	Fri, AWTR60SN (09D) B1/Overdrive Clutch (.085"Thick)(48T.) (7 11/16"OD) 2002-Up	4-AR	
235104A	Fri, AWTR60SN (09D) K1/ Intermediate Clutch (40 Teeth) (.083"Thick) 2002-Up	5-AR	
235106A	Fri, AWTR60SN (09D) K3 Clutch (.085"Thick)(6 3/4"OD)(36 Teeth) 2002-Up	4-AR	
235108A	Fri, AWTR60SN (09D) K2/Forward Clutch (.083"Thick)(42 Teeth) 2002-Up	5-AR	
235114A	Fri, AWTR60SN (09D) B1/Low/Reverse Clutch (50 Teeth) (.069"Thick) 2002-Up	7-AR	
235119A	Fri Module, AWTR60SN(VW 09D)(6 Spd RWD/AWD)(V-6 Only) 2002-Up	1	
235119AA	Fri Module, AWTR60SN(VW 09D)(6 Spd RWD/AWD)(All Except V-6) 2002-Up	1	

PART #	STEEL CLUTCHS	QTY	REFERENCE #
235120A	Steel, AWTR60SN (09D) B1/Overdrive Clutch (.080"Thick)(10 Outer Teeth)(6 3/4"ID) 2002-Up	3-AR	
235124A	Steel, AWTR60SN (09D) K1/Intermediate Clucth (36T.)(.079"Thick) 2002-Up	5-AR	
235126A	Steel, AWTR60SN (09D) K3 Clutch (.079"Thick)(36 Teeth)(5.737"ID) 2002-Up	4-AR	
235128A	Steel, AWTR60SN (09D) K2/Forward Clutch (.080"Thick)(36 Teeth) 2002-Up	5-AR	
235134A	Steel, AWTR60SN (09D) B2/Low/Reverse Clutch (24 Teeth)(.072"Thick) 2002-Up	6-AR	
235139A	Steel Module, AWTR60SN(VW 09D)(6 Spd RWD/AWD)(V-6 Only) 2002-Up	1	
235139AA	Steel Module, AWTR60SN(VW 09D)(6 SPD RWD/AWD)(V-8 ONLY)	1	

PART #	PRESSURE PLATES	QTY	REFERENCE #
235140A	Pressure Plate, AWTR60SN (09D) B1/Overdrive Clutch (.158"Thick)(10 Outer Teeth)(6 3/4"ID) 2002-Up	1	
235141A	Pressure Plate, AWTR60SN (09D) B1/Overdrive Clutch (.189"Thick)(6 3/4"ID)(10 Outer Teeth) 2002-Up	1	
235145A	Pressure Plate, AWTR60SN (09D) K1/Intermediate Clutch (36 Teeth)(.195"Thick) 2002-Up	1	
235146A	Pressure Plate, AWTR60SN (09D) K3 Clutch (.166"Thick)(36 Teeth)(5.730"ID) 2002-Up	1	
235148A	Pressure Plate, AWTR60SN (09D) K2/Foward Clutch (0.183"Thick)(36 Teeth) 2002-Up	1	
235154A	Pressure Plate, AWTR60SN (09D) B2/Low/Reverse Clutch (24 Teeth)(.246"Thick) 2002-Up	1	
235155A	Pressure Plate, AWTR60SN (09D) B2/Low/Reverse Clutch (.199"Thick)(24 Teeth) 2002-Up	1	

© Whatever It Takes Transmission Parts. Inc.

PART #	MISCELLNEOUS PARTS	QTY	REFERENCE #
235162A	Hose, AWTR60SN (09D) Case (18 1/2" Long)(Rubber) 2002-Up	1	

PART #	SHIFT KITS	QTY	REFERENCE #
T235165A	Shift Kit, AWTR60SN(VW 09D) 2002-Up (Transgo)	1	

PART #	SEALING RINGS	QTY	REFERENCE #
235178AT	Ring, AWTR60SN (09D) Turbine Shaft (Teflon)(.091"Thick)(1.420"OD) 2002-Up	5	
235179AT	Ring, AWTR60SN (09D) Stator (Teflon)(2.475"OD)(.095"Thick) 2002-Up	2	
235180AT	Ring, AWTR60SN (09D) Output Shaft (2.052"OD)(Teflon) 2002-Up	2	
235184AT	Ring, AWTR60SN (09D) K2/Forward Clutch Drum (Rear)(Teflon) (.093"Thick)(.770"OD) 2002-Up	1	

PART #	WASHERS & BEARINGS	QTY	REFERENCE #
235205A	Needle Brg, AWTR60SN (09D) Pump (2.047"OD)(1.767"ID)(.575"Thick)(Cast # F-23839) 2002-Up	1	
235209A	Washer, AWTR60SN (09D) Pump To K3 Drum (Steel)(4.013"OD)(7 Tabs) 2002-Up	1	
235210A	Ball Brg, AWTR60SN (09D) (Cast # DB503705W)(.535"Tall)(1.700"OD) 2002-Up	1	
235211A	Washer, AWTR60SN (09D) Stator To K3 Drum (Plastic)(.186"Thick)(3.369"OD)(2 Half Moon Tabs) (12 Square Cuts) 2002-Up	1	
235225A	Race, AWTR60SN (09D) Shell Assy to Rear Planet (3.444"OD)(2.820"OD) 2002-Up	1	
235226A	Bearing, AWTR60SN (09D) Shell Assy To Rear Planet (.113"Thick)(3.316"OD) 2002-Up	1	
235228A	Washer, AWTR60SN (09D) Drum To Planet (4 Tabs)(.024"Thick)(4.370"OD) 2002-Up	1	
235230A	Washer, AWTR60SN (09D) Drum To Planet (.162"/.439"Thick)(4.336"OD)(4 Bottom Tabs)(Yellow) (Plastic) 2002-Up	1	
235232A	Bearing, AWTR60SN (09D) Shaft To K1 Clutch Drum (.131"Thick)(2.556"OD) 2002-Up	1	
235233A	Race, AWTR60SN (09D) Bearing To K1 Clutch Drum (.140"Thick)(2.686"OD)(2.030"ID) 2002-Up	1	
235235A	Bearing, AWTR60SN (09D) Drum To Hub (2.010"OD)(.250"Thick)(Stepped) 2002-Up	1	
235236A	Race, AWTR60SN (09D) Drum Bearing To Hub (2.035"OD) 2002-Up	1	
235238A	Washer, AWTR60SN (09D) Front Plant To Tubrine Shaft (Yellow Plastic)(2 Half Oval, 1 Circle Tabs)(3.005"ID)(3.727"OD) 2002-Up	1	
235240A	Race, AWTR60SN (09D) Planet To Shaft (.080"/.197"Thick)(Front)(2.696"OD)(1.813"ID) 2002-Up	1	
235241A	Bearing, AWTR60SN (09D) Planet To Shaft (1.917"ID)(2.692"OD)(.158"Thick) 2002-Up	1	
235242A	Race, AWTR60SN (09D) Planet To Shaft (Rear)(1.855"ID)(2.797"OD)(.238"Thick) 2002-Up	1	
235247A	Race, AWTR60SN (09D) Hub To Sungear Shell (Stepped)(2.360"OD)(.164"Thick) 2002-Up	1	
235248A	Bearing, AWTR60SN (09D) K1 Clutch Hub To Sungear Shell (2.427"OD) 2002-Up	1	
235250A	Race, AWTR60SN (09D) Small Sungear To Planet (.136"Thick)(Stepped)(1.961"OD) 2002-Up	1	
235251A	Bearing, AWTR60SN (09D) Small Sungear To Planet (2.081"OD)(1.224"ID) 2002-Up	1	
235253A	Race, AWTR60SN (09D) Clutch Hub To Clutch Drum (Front)(2.083"OD)(.138"Thick) 2002-Up	1	
235254A	Bearing, AWTR60SN (09D) Clutch Hub To Clutch Dru, (.177"Thick)(2.050"OD) 2002-Up	1	
235255A	Race, AWTR60SN (09D) Clutch Hub To Clutch Drum (Rear)(.159"Thick)(1.984"OD) 2002-Up	1	
235260A	Bearing, AWTR60SN (09D) Output Shaft To Case (.130"Thick)(3.031"OD) 2002-Up	1	
235261A	Race, AWTR60SN (09D) Output Shaft To Case (.180"Thick) (3.244"OD) 2002-Up	1	
235263A	Bearing, AWTR60SN (09D) Back Of Case (.550"Thick)(11 Balls)(2.832"OD) 2002-Up	1	
235267A	Race, AWTR60SN (09D) K2 Drum To Output Shaft (.152"Thick)(1.992"OD) 2002-Up	1	
235268A	Bearing, AWTR60SN (09D) K2 Drum To Output Shaft (.177"Thick)(1.994"OD) 2002-Up	1	
235269A	Race, AWTR60SN (09D) K2 Drum To Output Shaft (.273"Thick)(2.118"OD) 2002-Up	1	
235271A	Caged Needle Brg, AWTR60SN (09D) Output Shaft (.925"ID) 2002-Up	1	
235275A	Spacer, AWTR60SN (09D) Inner Race To Planet (.048"Thick)(3.920"OD) 2002-Up	1	
235285A	Retainer, AWTR60SN (09D) Holds Sprag To Outter Race (5.472"OD)(4 Tabs)(.025"Thick)(Top & Bottom) 2002-Up	1	

PART #	GASKETS & RUBBER COMPONENTS	QTY	REFERENCE #
235300A	Gasket, AWTR60SN (09D) Bottom Pan To Case (16 Holes)(Molded Rubber) 2002-Up	1	
235300AW	Gasket, AWTR60SN(VW 09D)(6 Spd RWD/AWD) Pan (Bonded Rubber) 2002-Up	1	
235311A	O-Ring, AWTR60SN (09D) Pump 2002-Up	1	
235328A	O-Ring, AWTR60SN (09D) B1 Piston (Inner)(.123"Thick) 2002-Up	1	
235329A	O-Ring, AWTR60SN (09D) B1 Piston (Outer)(.124"Thick) 2002-Up	1	
235332A	O-Ring, AWTR60SN (09D) K1 Clutch Piston (Inner)(.104"Thick) 2002-Up	1	
235332A-1	O-Ring, AWTR60SN (09D) K1 Clutch Piston Retainer (.114"Thick) 2002-Up	1	
235333A	O-Ring, AWTR60SN (09D) K1 Clutch Drum (.128"Thick)(Inner) 2002-Up	1	
235334A	O-Ring, AWTR60SN (09D) K2/Forward Clutch Drum (.113"Thick) (1.603"ID) 2002-Up	1	
235335A-1	O-Ring, AWTR60SN (09D) K2 Clutch Piston (.114"Thick) 2002-Up	1	

© Whatever It Takes Transmission Parts. Inc.

PART #	GASKETS & RUBBER COMPONENTS (Continued)	QTY	REFERENCE #
235335A	O-Ring, AWTR60SN (09D) K2/Forward Apply Piston (.130”Thick) 2002-Up	1	
235336A	O-Ring, AWTR60SN (09D) K3 Clutch Piston (Inner)(.106”Thick) (3.047”ID) 2002-Up	1	
235337-1A	O-Ring, AWTR60SN (09D) K3 Clutch Piston Retainer (.097”Thick) (5.518”OD) 2002-Up	1	
235337A	O-Ring, AWTR60SN (09D) K3 Clutch Piston (Outer)(.118”Thick) (5.144”OD) 2002-Up	1	
235338A	O-Ring, AWTR60SN (09D) B2 Clutch Apply Piston (Inner) (.103”Thick) 2002-Up	1	
235339-1A	O-Ring, AWTR60SN (09D) B2 Clucth Apply Piston (Middle) (.103”Thick) 2002-Up	1	
235339A	O-Ring, AWTR60SN (09D) B2 Clutch Apply Piston (Outter) (.123”Thick) 2002-Up	1	
235347A	O-Ring, AWTR60SN (09D) 14 Way Conn. & 8 Way Conn. 2002-Up	1	
235370A	O-Ring, AWTR60SN (09D) Input Sensor (.490”OD)(.386”ID) (.069”Thick) 2002-Up	1	
235379A	O-Ring, AWTR60SN (09D) Filter Neck (1.325”ID) 2002-Up	1	

PART #	TECHNICAL MANUALS	QTY	REFERENCE #
235400A	Tech Manual, AWTR60SN(09D)	1	

PART #	ELECTRICAL COMPONENTS	QTY	REFERENCE #
235410A	Switch, AWTR60SN (09D) PRDL (9 Prong Oval Conn.) 2002-Up	1	
235412A	Switch, AWTR60SN (09D) Pressure K1 Clutch G193 (*By TCC Solenoid) 2002-Up	1	
235413A	Switch, AWTR60SN (09D) Pressure B2 Clutch G194 (*By K2 & B1 Clutch Solenoid) 2002-Up	1	
235414A	Solenoid, AWTR60SN (09D) N90 PWM K3 Clutch Control (11BA1A00265) 2002-Up	1	
235421A	Solenoid, AWTR60SN (09D) N92 PWM K1 Clutch Control (11AN0M04320) 2002-Up	1	
235425A	Solenoids, AWTR60SN (09D) N91 PWM TCC Control (4DF0M00803) 2002-Up	1	
235426A	Solenoid, AWTR60SN (09D) N88 On/Off (MD07BP) 2002-Up (Also Fits AWTR60SN (09D) N89 On/Off 2002-Up)	2	
235427A	Solenoid, AWTR60SN (09D) N282 PWM K2 Clutch Control (11AN0M04318) 2002-Up	1	
235428A	Solenoids, AWTR60SN (09D) N93 PWM Line Pressure Control (11AN0M04327) 2002-Up	1	
235435A	Solenoid, AWTR60SN (09D) N283 PWM B1 Clutch Control (11AN0M04326) 2002-Up	1	
235436A	Sensor, AWTR60SN (09D) Output Speed (Black)(1 Bracket) (W/ Wires 17 1/2”long) 2002-Up	1	
235438A	Sensor, AWTR60SN (09D) Input Speed Sensor (In Stator) (Yellow Connector)(ID # PA66-GF33) (3.994”Long) 2002-Up	1	
235446A	Wire Harness, AWTR60SN (09D) (14 Way Connector)(Oval Plug) (8 Small Connectors) 2002-Up	1	
235446B	Wire Harness, AWTR60SN (09D) (8 Way Connector)(Semi Oval Conn) (5 Small Connector) 2002-Up	1	

Part #	HARD PARTS	QTY	REFERENCE #
235489A	Shield, AWTR60SN (09D) Linkage Debris (1.474”OD) 2002-Up	1	
235510A	Pump Body, AWTR60SN (09D) 10 Bolts To Case (Cast # 471) (Has Guide Pin Hole) 2002-Up	1	
235520A	Stator, AWTR60SN (09D) (9 Bolts To Pump Body)(Cast # 72) 2002-Up	1	
235530A	Pump Gear Set, AWTR60SN (09D) (9 Round Teeth)(.430”Thick)(3.676”OD Outer Gear) (2.955”OD Inner Gear) 2002-Up	1	
235552A	Drum, AWTR60SN (09D) K1 Clutch (2.016”Tall) 2002-Up	1	
235554A	Drum W/ Shaft, AWTR60SN (09D) K2/Forward Clutch (10” Long) (Stamped Steel)(24 Splines) 2002-Up	1	
235555A	Drum, AWTR60SN (09D) K3 Clutch (Aluminum)(4 11/16”Tall)(7 3/4”OD)(48 Top Teeth) 2002-Up	1	
235560A	Piston Kit, AWTR60SN (09D) B1 Clutch 2002-Up	1	
235566A	Piston Kit, AWTR60SN (09D) B2/Low/Reverse Clutch Apply 2002-Up	1	
235572A	Clutch Hub, AWTR60SN (09D) K1/Intermediate (32 Outer Splines) (2.296”OD Neck) 2002-Up	1	
235574A	Clutch Hub, AWTR60SN (09D) K2/Foward (3.772”ID)(42 Outer Splines)(Aluminum)(12 Bolt Holes) 2002-Up	1	
235582A	Planet, AWTR60SN (09D) Front (3-16 Teeth Gears)(Left Angle)(27 Outer Teeth)(5.651”OD) 2002-Up	1	
235584A	Planet, AWTR60SN (09D) Sungear/Shell To Rear Ring Gear (Rear)(3 Double Gears)(51 Large Splines) 2002-Up	1	
235592A	Ring Gear, AWTR60SN (09D) Plant To Shaft (5.256”OD)(62 Teeth)(Right Angle)(1.420”Thick) 2002-Up	1	
235594A	Ring Gear, AWTR60SN (09D) Rear Planet To Output Shaft (Rear)(72 Left Angled Teeth) (3.944”Tall) 2002-Up	1	
235612A	Sun Gear, AWTR60SN (09D) Front Panet (40 Outer Teeth) (Right Angle)(48 Inner Teeth) (.980”Thick) 2002-Up	1	
235614A	Sungear/Shell Assy, AWTR60SN (09D) Large (2.107”Tall)(2.750”OD)(33 Left Angled Teeth) 2002-Up	1	
235614A-1	Sungear, AWTR60SN (09D) Shell Assembly To Planet (Small)(Rear)(41 Splines)(4.290”Tall) 2002-Up	1	
235639A	Spring, AWTR60SN (09D) Inner Race To Planet (Wavey) (Split)(.041”Thick)(3.907”OD) 2002-Up	1	

© Whatever It Takes Transmission Parts. Inc.

235652A ..... Sprag, AWTR60SN (09D) Outter Race (4.944”OD)(.891”Thick) 2002-Up 1
235662A ..... Inner Race, AWTR60SN (09D) Sprag (1.180”Thick)(4.195”OD)(79 Inner Splines) 2002-Up 1
235663A ..... Outter Race, AWTR60SN (09D) Sprag (4.937”ID)(.972”Thick) 2002-Up 1
235670A ..... Shaft, AWTR60SN (09D) Turbine (20 Top Splines)(5 Rings) (72 Teeth Rear Plate)(24 Bottom Splines) 2002-Up 1
235678A ..... Output Shaft, AWTR60SN (09D) Ring Gear To Case (49 Top Splines)(7 1/4”Long) 2002-Up 1
235740A ..... Valve Body, AWTR60SN (09D) (8 Solenoids) 2002-Up 1
S235741CAK.. Valve Kit, AWTR60SN(09D) TCC Control (Contains; TCC Control Valve, TCC Control Sleeve, Plunger Valve, Plunger Sleeve, & Plunger Spring)(Sonnax) (Must Use T-F-24741-TL29) 1
S235741LK..... Solenoid Modulator Valve Kit, AWTR60SN (Contains: Valve, Sleeve,Spring,& End Plug)(Sonnax) (Must Use Tool T-F-25741-TL18) 1
T-F-25741-TL18.. Reamer For S235741LK 1
T-F-25741-TL29.. For S235741CAK 1
235741-1A ..... Manual Valve, AWTR60SN (09D) Valver Body (5.585”Long) 1
235741-10A .... Body Casting, AWTR60SN (09D) Manual Valve (6.095” Long) (7 Bolt Holes) 2002-Up 1
235750A ..... Bell Housing, AWTR60SN (09D) (8:00 Closed Starter)(22 Bolts To Case)(Cast # JP57344-01 OSD321107)(4.930”Top Bolt)(12 Holes To Engine)(5.902” Thick)(4x4) 2002-Up 1
235760A ..... Case, AWTR60SN (09D) (22 Bolts To Bell)(10 Bolt Holes For Pump)(Case # 090321105) 2002-Up 1
235765A ..... Pan, AWTR60SN (09D) Bottom (16 Holes)(Black)(2 Plugs) (Metal) 2002-Up 1
235776AK..... Bolts, AWTR60SN (09D) Bell Housing To Case (22 Pieces) (12mm x 1.46in Long) 2002-Up 1
235778AK..... Bolt Set, AWTR60SN (09D) (9 Pieces)(T30 x .885”Long) 2002-Up 1
235779AK..... Bolt Set, AWTR60SN (09D) Pan To Case (16 Pieces) (10mm Hex x 1.145”Long) 2002-Up 1
235782AK..... Bolt Set, AWTR60SN (09D) Holds VB To Case (10mm Hex x 1.327” Long) 2002-Up 1
235791A ..... Bolts Set, AWTR60SN (09D) Holds Body Casting To VB (8mm Hex x 1.496”Long) 2002-Up (7 Pieces) 1
235791-1A ..... Bolts, AWTR60SN (09D) Solenoid (10mm Hex Head) 2002-Up 1
235797A ..... Nut, AWTR60SN (09D) Linkage Acorn (14 Hex) 2002-Up 1
235799A ..... Nut, AWTR60SN (09D) Linkage Holds Lever To Case (12 Hex) 2002-Up 1
235850A ..... Cushion, AWTR60SN (09D) B1/Overdrive Clutch (7 3/4”OD) (6 14/16”ID)(.057”Thick) 2002-Up .. 1
235860A ..... Snap Ring, AWTR60SN (09D) Holds B1/Overdrive Clutch To Drum (7 1/4”OD)(.099”Thick) 2002-Up 1
235870A ..... Snap Ring, AWTR60SN (09D) Holds Brg To Pump (2.175”OD) (1.890”ID)(.058”Thick) (Hookes Ends) 2002-Up 1
235872A ..... Snap Ring, AWTR60SN (09D) Holds K1/Intermediate Clutch In Drum (8 3/16”OD)(.099”Thick) 2002-Up 1
235874A ..... Snap Ring, AWTR60SN (09D) Holds Piston To Drum (.049”Thick) (2.141”OD) 2002-Up 1
235875A ..... Snap Ring, AWTR60SN (09D) Holds Piston To Drum (.047”Thick) (1.890”OD) 2002-Up 1
235876A ..... Snap Ring, AWTR60SN (09D) Holds K2 Clutch To Drum (.098”Thick)(5.837”OD) 2002-Up 1
235878A ..... Snap Ring, AWTR60SN (09D) Holds K3 Clutch To Drum (7 3/16”OD)(.099”Thick)(Flat Edges) 2002-Up 1
235879A ..... Snap Ring, AWTR60SN (09D) Hold Piston To Drum (.047”Thick) (3.020”OD)(2.730”ID)(Angled Edges) 2002-Up 1
235880A ..... Snap Ring, AWTR60SN (09D) Holds Shaft and Ring Gear (.055”Thick)(5.385”OD)(5.070”ID) 2002-Up 1
235883A ..... Snap Ring, AWTR60SN (09D) Hold Sprage To Planet (.047”Thick) (3.426”OD) 2002-Up 1
235885A ..... Snap Ring, AWTR60SN (09D) Holds B2 Clutch To Ring Gear (.099”Thick)(7 5/16”OD) 2002-Up . 1
235886A ..... Snap Ring, AWTR60SN (09D) Holds Sprag To Case (.047”Thick) (7 5/16”OD) 2002-Up 1
235889A ..... Snap Ring, AWTR60SN (09D) Holds Output Shaft To Ring Gear (.100”Thick)(6 9/16”OD) 2002-Up 1
235894A ..... Snap Ring, AWTR60SN (09D) Holds B2 Clutch Piston To Case (.030”Thick)(3.212”OD) 2002-Up 1
235895A ..... Snap Ring, AWTR60SN (09D) Holds Bearing In Back of Case (.058”Thick)(2.942”OD) 2002-Up . 1
235960A ..... Piston, AWTR60SN (09D) B1 Clutch (7 5/16”OD)(6 1/4”ID) (Guide Pin) 2002-Up 1
235962A ..... Piston, AWTR60SN (09D) K1 Clutch (5.374”OD On Bottom)(6 3/8”OD On Top)(Aluminum) 2002-Up 1
235964A ..... Piston, AWTR60SN (09D) K2/Forward Clutch Apply (5.231”OD On Widest Part)(1.770”ID) 2002-Up 1
235965A ..... Piston, AWTR60SN (09D) K3 Clutch (6 1/4”OD)(1.280”Tall)(3.047”ID)(Aluminum) 2002-Up 1
235966A ..... Piston, AWTR60SN (09D) B2/Low/Reverse Clutch Apply (5 11/16”Tall)(22 Spring Pockets) 2002-Up 1
235972A ..... Return Spring, AWTR60SN (09D) K1 Clutch (22 Springs) (3.695”OD)(.838”Tall) 2002-Up 1
235974A ..... Return Spring, AWTR60SN (09D) K2 Clutch Piston (20 Springs)(3.387”OD) 2002-Up 1
235975A ..... Return Spring, AWTR60SN (09D) K3 Clutch (4.590”OD)(3.630”ID)(20 Springs) 2002-Up 1
235976A ..... Return Spring, AWTR60SN (09D) B2 Piston (22 Springs) (4.590”OD) 2002-Up 1
235980A ..... Return Spring, AWTR60SN (09D) B1 Clucth Piston (7 9/16”OD) (24 Springs)(5 Bolt Holes) 2002-Up 1
235982A ..... Piston Retainer, AWTR60SN (09D) K1 Clutch (Aluminum)(22 Spring Pockets)(5.107”OD) 2002-Up 1

© Whatever It Takes Transmission Parts. Inc.

Part #	HARD PARTS (Continued)	QTY	REFERENCE #
235984A	Piston, AWTR60SN (09D) K2 Clutch Balanced (4.716”OD)(20 Spring Pockets)(Aluminum) 2002-Up	1	
235985A	Piston Retainer, AWTR60SN (09D) (Aluminum)(20 Spring Pockets) 2002-Up	1	
235991-1A	Spacer, AWTR60SN (09D) Dentent Spring (1.850”Long) (.072”Thick) 2002-Up	1	
235991-2A	Spring, AWTR60SN (09D) Dentent (4.835”Long) 2002-Up	1	
235991-3A	Rooster Comb, AWTR60SN (09D) (Internal)(4.233”Long) 2002-Up	1	
235991-4A	Shaft, AWTR60SN (09D) Manual (12 1/4” Long) 2002-Up	1	
235991-5A	Pin, AWTR60SN (09D) Holds Rooster Comb To Shaft (.766”Long)(.161”OD) 2002-Up	1	
235991-6A	Bracket, AWTR60SN (09D) Park Rod Actuator 2002-Up	1	
235992A	Lever, AWTR60SN (09D) Shift (External) (2.628”Long) 2002-Up	1	
235994A	Park Rod Actuator, AWTR60SN (09D) Rooser Comb To Case (10 1/2”Long) 2002-Up	1	
235995A	Park Pawl Assy, AWTR60SN (09D) (Arm 5.018”Long)(Pin 2.585”Long)(E-Clip .547”OD) (Spring 1.603”Tall) 2002-Up	1	

© Whatever It Takes Transmission Parts. Inc.

© Whatever It Takes Transmission Parts. Inc.

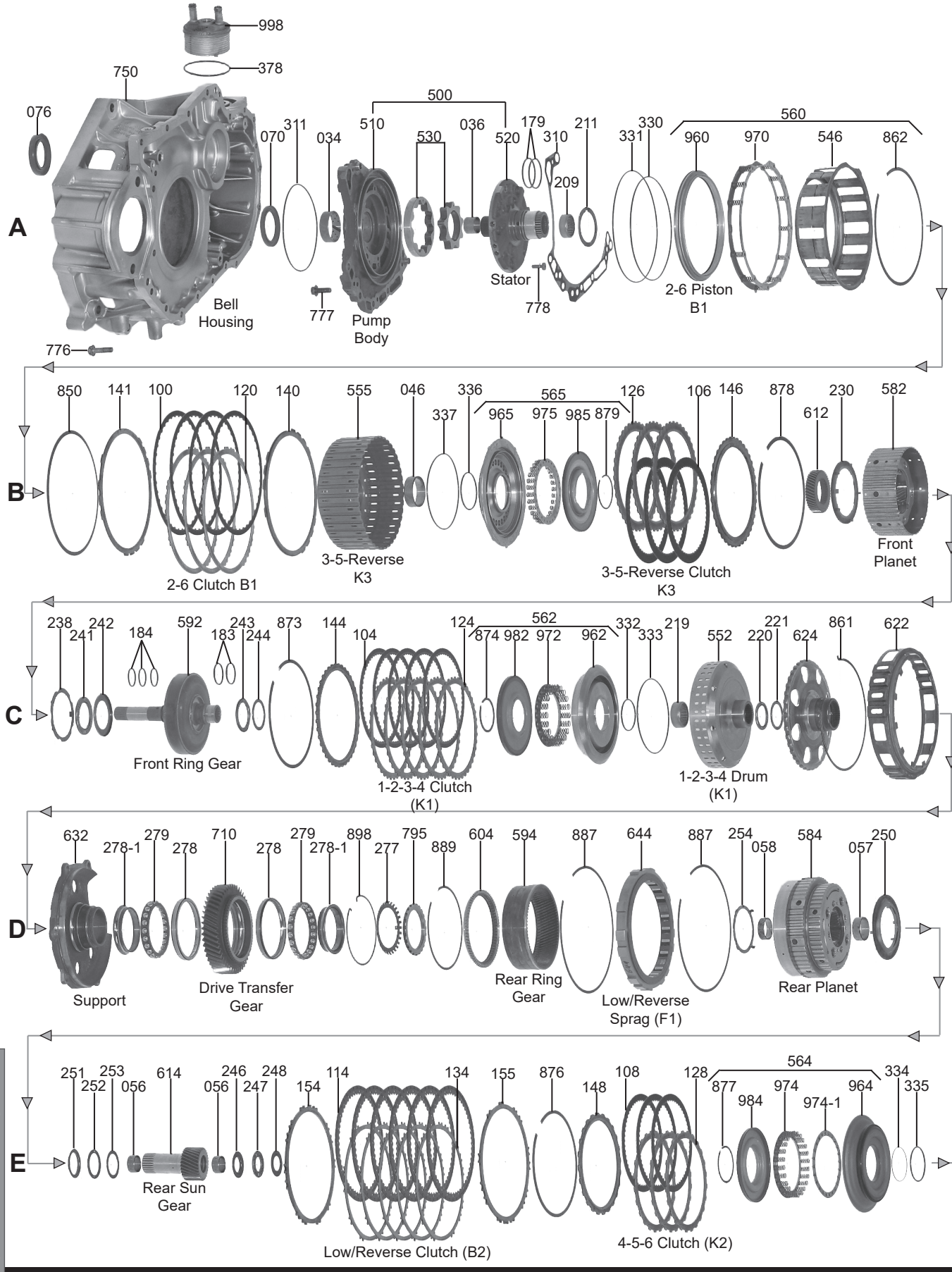

002 Overhaul Kit
004 Master L/Steels Kit
006 Master W/Steels Kit
030 Bushing Kit
119 Friction Module
139 Steel Module
165 Valve Body Kit
175 Ring Kit
400 Technical Manual

VOLKSWAGEN

© Whatever It Takes Transmission Parts. Inc.

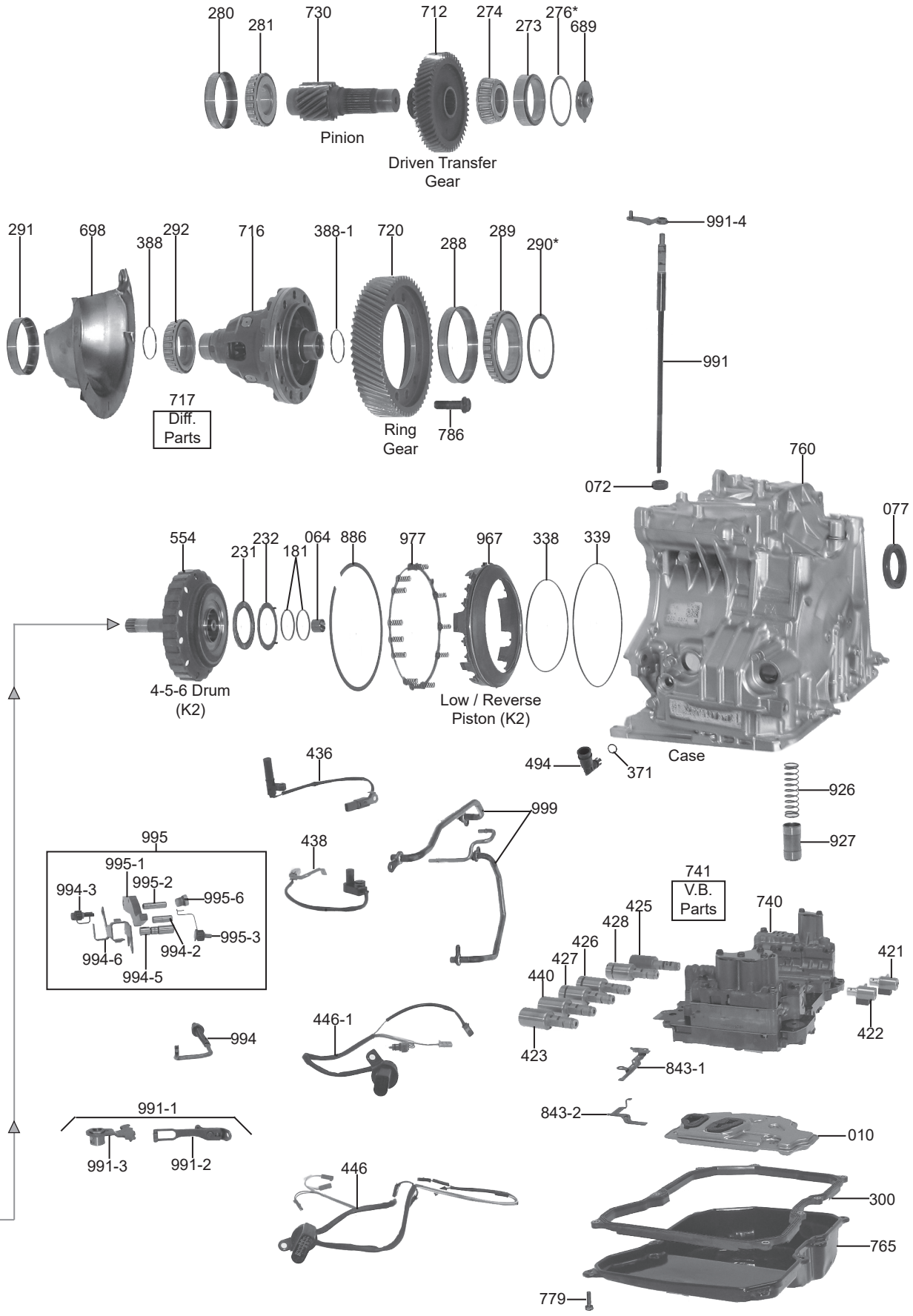

1-800-940-0197

© Whatever It Takes Transmission Parts. Inc.

PART #	OVERHAUL KIT	QTY	REFERENCE #
265002A	Overhaul Kit, AWTF60SN (09G VW/Audi) 2003-Up (For Bonded Pistons Sell A265960AK)	1	
265002B	Overhaul Kit, 09K 2003-Up (Transtec)	1	
265002C	Overhaul Kit, 09M 2006-09 (VW Passat & Passat Wagon W/3.6L 2006-08)(Tiguan With 2.0L 2008-09)	1	

PART #	MASTER L/STEELS KIT	QTY	REFERENCE #
265004A	Master L/Steels Kit, 09G (Fits 1.8L & 1.9L Engine Only)(W/55 Teeth 4-5-6 (K2) Friction) 2003-Up (For Bonded Pistons Sell A265960AK)(Also Fits 6F21WA 2006-11)	1	
265004AA	Master L/Steels Kit, 09G (Fits 2.0L, 2.5L, & 3.6L Engine)(W/55 Teeth 4-5-6 (K2) Frictions 2003-Up)(For Bonded Pistons Sell A265960AK)(Will Also Fit The 1.6L/1.8L/1.9L, But Will Have 5 Frictions Left Over)	1	
265004B	Master L/Steels Kit, 09K (VW) 2003-Up (With .060" & .066" K2 Clutch)(For Bonded Pistons Sell A265960AK)	1	
265004C	Master L/Steels Kit, 09M 2006-Up (For Bonded Pistons Sell A265960AK)	1	

PART #	MASTER W/STEELS KIT	QTY	REFERENCE #
265006A	Master W/Steels Kit, 09G (Fits 1.8L & 1.9L Engine Only)(W/55 Teeth 4-5-6 (K2) Frictions) 2003-Up (For Bonded Pistons Sell A265960AK)(Also Fits 6F21WA 2006-11)	1	
265006AA	Master W/Steels Kit, 09G (Fits 2.0L, 2.5L, & 3.6L Engine)(W/55 Teeth 4-5-6 (K2) Frictions 2003-Up)(For Bonded Pistons Sell A265960AK)(Will Also Fit The 1.6L/1.8L/1.9L, But Will Have 5 Frictions Left Over)	1	
265006B	Master W/Steels Kit, 09K (VW) 2003-Up (With .060" & .066" K2 Clutch)(For Bonded Pistons Sell A265960AK)	1	

PART #	FILTERS	QTY	REFERENCE #
265010A	Filter, 09G (.905"Thick, For Shallow Pan) 2003-Up (Pick-Up Opening Is 4.333"Long and .785"Wide)	1	.09G-325-429A
265010AA	Filter, 09G (1.050"Thick, For Deep Pan) 2005-Up (Metal)(Pick-Up Opening Is 3.028"Long and 1.110"Wide)	1	.09G-325-429A
265010AB	Filter, 09G/TF-60SN w/Raised Intake (1.735"Long)(1.003"Wide) 2003-13 (Plastic)(3 Bolt)	1	
265010B	Filter, 09K (Metal) 2004-Up	1	.09K-325-429
265010C	Filter, 09M (Metal) 2006-Up	1	
265010D	Filter, A6F21WA/09G (Mini Cooper) 2005-Up (With .950" Pickup Tube)(Metal)	1	
265010DA	Filter, A6F21WA/09G (Mini Cooper) 2007-Up (With .710" Pickup Tube)(Metal)	1	

PART #	BUSHINGS	QTY	REFERENCE #
265030A	Bushing Kit, 09G (VW, Audi) (Contains: 1 Pump, 1 K3 & 2 Sun Gear Bushings) 2003-Up (Omega)	1	
265034A	Bushing, 09G Pump Body (.575" Wide)(1.725"ID) 2003-Up	1	
265036A	Bushing, 09G Stator (Front) (.683"Wide)(.875"ID) 2003-Up	1	
265046A	Bushing, 09G 3-5 Reverse Clutch (K3) Drum (.465"Wide)(1.635"ID) 2003-Up	1	
265056A	Bushing, 09G Rear Planet Rear Sun Gear (.495"Wide)(.820"ID) 2003-Up	2	
265057A	Bushing, 09G Rear Planet Front Sun Gear (Rear)(.563"Wide)(1.175"ID) 2003-Up	1	
265058A	Bushing, 09G Rear Planet Front Sun Gear (Front)(.380"Wide)(1.175"ID) 2003-Up	1	
265064A	Bushing, 09G 4-5-6 Clutch (K2) Drum (In Case)(.550"Wide)(.635"ID) 2003-Up	1	

PART #	METAL CLAD SEALS	QTY	REFERENCE #
265070A	Seal, 09G Pump (.231" Thick)(2.409"OD)(1.725"ID) 2003-Up	1	
265072A	Seal, 09G Manual Lever (.866"OD)(.470"ID) 2003-Up	1	
265076A	Use 89076A.	1	
89076A	Seal, 09G Axle (Both Sides) (1.520"ID)(2.483"OD)	2	
265077A	Use 89076A.	1	

PART #	FRICTIONS	QTY	REFERENCE #
265100A	Friction, 09G 2-6 Clutch (B1)(.067")(40 Teeth)(7 1/4"OD) 2003-Up	4	
265104A	Friction, 09G 1-2-3-4 Clutch (K1)(.066")(56 Teeth)(5.790"OD) 2003-Up	5	
265104AA	Friction, 09G/09M 1-2-3-4 Clutch (K1)(.058")(56 Teeth)(5.790"ID) 2004-Up	5	
265106A	Friction, 09G 3-5 Reverse Clutch (K3)(.067")(56 Teeth)(6 1/4"OD) 2003-Up	3	
265108A	Friction, 09G 4-5-6 Clutch (K2)(.068")(55 Teeth)(5.727"OD) 2003-Up	3	
265108C	Friction, 09K/09M 4-5-6 Clutch (K2)(.060")(61 Teeth) 2004-Up	6	
265108CA	Friction, 09K/09M 4-5-6 Clutch (K2)(.066")(60 Teeth) 2004-Up (Also Fits 6F21WA (Mini-Cooper Takes 4)	4-12	

© Whatever It Takes Transmission Parts. Inc.

265114A.....Friction, 09G Low/Reverse Clutch (B2)(.066")(56 Teeth)(6 3/4"OD) 2003-Up.....6
265119A.....Friction Module, 09G (Fits 1.8L & 1.9L Engine)(W/55 Teeth 4-5-6 Clutch (K2) 2003-Up.....1
265119AA.....Friction Module, 09G (Fits 2.0L, 2.5L, & 3.6L Engine) 2003-Up (W/55 Teeth K2 Frictions).....1
265119C.....Friction Module, A09M 2006-Up.....1

PART #	STEELS	QTY	REFERENCE #

265120A.....Steel, 09G 2-6 Clutch (B1)(.069")(12 Teeth)(6 1/2"ID) 2003-Up.....3
265124A.....Steel, 09G 1-2-3-4 Clutch (K1)(.070")(40 Teeth)(5.144"ID) 2003-Up.....5
265126A.....Steel, 09G 3-5 Reverse Clutch (K3)(.070")(40 Teeth)(5.160"ID) 2003-Up.....3
265128A.....Steel, 09G 4-5-6 Clutch (K2)(.069")(24 Teeth)(4.995"ID) 2003-Up.....5
265134A.....Steel, 09G Low/Reverse Clutch (B2)(.069")(14 Teeth)(6 1/8"ID) 2003-Up.....5
265139A.....Steel Module, 09G 2003-Up.....1

PART #	PRESSURE PLATES	QTY	REFERENCE #

265140AA.....Pressure Plate, 09G 2-6 Clutch (B1) Selective (12 Teeth)(6 1/2"ID) 2003-Up.....1
265141A.....Apply Plate, 09G 2-6 Clutch (B1)(.091")(12 Teeth)(6 1/2"ID) 2003-Up.....1
265144AA.....Pressure Plate, 09G 1-2-3-4 Clutch (K1) Selective (40 Teeth)(5.144"ID) 2003-Up.....1
265146AA.....Pressure Plate, 09G 3-5 Reverse Clutch (K3) Selective (40 Teeth)(5.153"ID) 2003-Up.....1
265148A.....Pressure Plate, 09G 4-5-6 Clutch (K2)(.114")(24 Teeth)(4.995"ID) 2003-Up.....1
265154AA.....Pressure Plate, 09G Low/Reverse Clutch (B2) Selective (14 Teeth)(6 1/8"ID) 2003-Up.....1
265155A.....Apply Plate, 09G Low/Reverse Clutch (B2)(.118")(14 Teeth)(6 1/8"ID) 2003-Up.....1

PART #	VALVE BODY KITS	QTY	REFERENCE #

265165A.....Shift Kit, 09G 2003-Up (Transgo).....1

PART #	OIL SEALING RINGS	QTY	REFERENCE #

265175AT.....Ring Kit, 09G/09M/09K 2003-Up.....1
265179AT.....Ring, 09G 3-5 Reverse Clutch (K3) (Stator)(.090"Wide)(1.775"OD)(Teflon) 2003-Up.....2
265181AT.....Ring, 09G 4-5-6 Clutch (K2)(In Case)(.091"Thick)(1.728"OD)(Teflon) 2003-Up.....2
265183AT.....Ring, 09G 1-2-3-4 Clutch (K1) (.091"Wide)(1.240"OD)(Teflon) 2003-Up.....2
265184AT.....Ring, 09G Input Shaft (.091" Wide)(1.035"OD)(Teflon) 2003-Up.....3

PART #	WASHERS AND BEARINGS	QTY	REFERENCE #

265200A.....Washer Kit, AWTF60SN (09G VW/Audi) 2003-Up.....1
265209A.....Caged Needle Bearing, 09G Stator (Rear)(.480"Wide)(1.225"OD)(34 Needles) 2003-Up.....1
265211A.....Washer, 09G Stator To 3-5 Reverse (K3) Drum (.047"Thick)(2.280"OD)(1 Tab, Plastic)
.....2003-Up.....1
265219A.....Caged Needle Bearing, 09G 1-2-3-4 Clutch (K1) Drum (Inner)(1.233"OD)(34 Needles)
.....2003-Up.....1
265220A.....Bearing W/Race, 09G 1-2-3-4 Clutch (K1) To Rear Planet (.110"Thick)(1.644"OD)(1.176"ID)
.....2003-Up.....1
265221A.....Race, 09G 1-2-3-4 Clutch (K1) Drum To Rear Planet (.059"Thick)(1.707"OD)(1.288"ID)
.....2003-Up.....1
265230A.....Washer, 09G 3-5 Reverse Clutch (K3) Drum To Front Planet (.130"Thick)(3.630"OD)(2.720"ID)
.....(5 Legs, 1 Tab)(Plastic) 2003-Up.....1
265231A.....Bearing W/Race, 09G 4-5-6 Clutch (K2) Drum To Case (.153"Thick)(2.665"OD)(1.877"ID)
.....2003-Up.....1
265232A.....Race, 09G 4-5-6 Clutch (K2) Drum To Case (.031"Thick)(2.626"OD)(1.955"ID) 2003-Up.....1
265238A.....Washer, 09G Front Planet To Ring Gear(.047"Thick)(3.100"OD)(2.595"ID)(3 Tab)(Plastic)
.....2003-Up.....1
265241A.....Bearing W/Race, 09G Front Planet Sun Gear To Ring Gear (.129"Thick)(2.204"OD)(1.493"ID)
.....2003-Up.....1
265242A.....Race, 09G Front Planet Sun Gear To Ring Gear (Cupped)(2.467"OD)(1.617"ID) 2003-Up.....1
265243A.....Bearing W/Race, 09G Front Planet Ring Gear To 1-2-3-4 Clutch (K1) Drum (.110"Thick)
.....(1.926"OD)(1.414"ID) 2003-Up.....1
265244A.....Race, 09G Front Planet Ring Gear To 1-2-3-4 Clutch (K1) Drum (.059"Thick)(1.803"OD)
.....(1.370"ID) .2003-Up.....1
265246A.....Race, 09G Rear Planet Rear Sun Gear To 4-5-6 Clutch (K2) Drum (.031"Thick)(1.517"OD)
.....(.885"ID) 2003-Up.....1
265247A.....Bearing, 09G Rear Planet Rear Sun Gear To 4-5-6 Clutch (K2) Drum (.137"Thick)(1.515"OD)
.....(.823"ID) 2003-Up.....1
265248A.....Race, 09G Rear Planet Rear Sun Gear To 4-5-6 Clutch (K2) Drum (.031"Thick)(1.635"OD)
.....(.829"ID) 2003-Up.....1
265250A.....Washer, 09G Rear Planet To 4-5-6 Clutch (K2) Drum (.110"Thick)(3.740"OD)(8 Tabs)(Plastic)
.....2003-Up.....1

© Whatever It Takes Transmission Parts. Inc.

PART #	WASHERS AND BEARINGS (Continued)	QTY	REFERENCE #
265251A	Race, 09G Rear Planet Front Sun Gear To Rear Sun Gear (.030"Thick)(1.635"OD)(1.237"ID) (Cupped) 2003-Up	1	
265252A	Bearing, 09G Rear Planet Front Sun Gear To Rear Sun Gear (.078"Thick)(1.700"OD)(1.252"ID) 2003-Up	1	
265253A	Race, 09G Rear Planet Front Sun Gear To Rear Sun Gear (.030"Thick)(1.635"OD)(1.179"ID) (Flat) 2003-Up	1	
265254A	Washer, 09G Transfer Nut To Rear Planet (.047"Thick)(2.782"OD)(2.360"ID)(4 Tabs) 2003-Up	1	
265273A	Cup Race, 09G Pinion Shaft To Case (.747"Thick)(2.833"OD)(Cast # 32207J) 2003-Up	1	
265274A	Cone Bearing, 09G Pinion Shaft To Case (.912"Thick)(1.284"ID)(Cast # R32Z-4) 2003-Up	1	
265276AA	Shim. 09G Pinion Shaft To Case (Selective)(2.803"OD)(2.381"ID) 2003-Up	1	
265277A	Lock Washer, 09G Under Retaining Nut (1 Inner Tab)(29 Outer Tabs) 2003-Up	1	
265278-1A	Cup Race, 09G Drive Transfer Gear Inner Race (.488"Thick)(2.436"ID) 2003-Up	2	
265278A	Cup Race, 09G Drive Transfer Gear Outer Race (.368"Thick)(3.597"OD) 2003-Up	2	
265279A	Ball Bearing, 09G Drive Transfer Gear (W/Plastic Cage)(22 Balls) 2003-Up	2	
265280A	Cup Race, 09G Pinion Shaft To Bell Housing (.647"Thick)(3.149"OD)(Cast # R39-4A) 2003-Up	1	
265281A	Cone Bearing, 09G Pinion Shaft To Bell Housing (.745"Thick)(1.536"ID)(Cast # R39-4) 2003-Up	1	
265288A	Cup Race, 09G Differential To Case (.634"Thick)(4.250"OD) 2003-Up	1	
265289A	Cone Bearing, 09G Differential To Case (.726"Thick)(2.992"ID)(Cast #TR151102) 2003-Up	1	
265290AA	Shim, 09G Differential To Case (Selective)(3.560"OD)(3.005"ID) 2003-Up	1	
265291A	Cup Race, 09G Differential To Bell Housing (.608"Thick)(3.188"OD)(Cast # STA5181) 2003-Up	1	
265292A	Cone Bearing, 09G Differential To Bell Housing (2.006"ID)(25 Rollers) 2003-Up	1	

PART #	GASKETS & RUBBER COMPONENTS	QTY	REFERENCE #
265300AW	Gasket, 09G Bottom Pan (Molded Rubber)(8 Bolt Holes) 2003-Up	1	
265300CW	Gasket, 09M Bottom Pan (Molded Rubber)(9 Bolt Holes) 2006-Up	1	
265310AW	Gasket, 09G/09K Pump To Case (Metal)2003-Up	1	
265311A	O-Ring, 09G Pump 2003-Up	1	

PART #	TECHNICAL MANUALS	QTY	REFERENCE #
265400A	Diagnostic Guide, 09G 2003-Up	1	
265400AA	Technical Manual, 09G/09M 2003-Up	1	TF60SN

PART #	ELECTRICAL COMPONENTS	QTY	REFERENCE #
265411A	Switch, 09G VW/Audi (AWTF60SN) Pressure (Normally Open) 2002-05/04 (Verifies Activation Of The K-1 & B-2 Clutch)(Also Fits 09D)	1	
265420AK	Solenoid Set, 09G/09D Linear (Includes TCC, EPC, C1, C2, C3 & B1 Solenoids) 2009-13	1	
265421A	Solenoid, 09G Shift (N89)(1 Prong Black Connector)(1.630"Long)(1 Bolt Bracket)(No Stripe) 2003-Up (Also Fits 09G Shift (N88) # 422 2003-Up)	1-2	
265422A	Use U265421A	1	
265423A	Solenoid, 09G 3-5 Reverse Clutch (K3) (2 Prong Black Connector)(3.331"Long) (Cast # 10CP5D04395)(No Stripe) 2003-Up	1	
A21425-2AK	Housing Set, 09G TCC/SLT & SLS Solenoid Can (Contains: 2 Solenoid Housing)(Superior)	1	
265425A	Solenoid, 09G TCC (N91)(2 Prong Black Connector)(3.331"Long)(Cast # 12AU5D03959) (No Stripe) 2003-Up	1	
265426A	Solenoid, 09G 1-2-3-4 Clutch (K1) (2 Prong Black Connector)(3.331"Long) (Cast # 11BX5D01563)(W/Black Stripe) 2003-Up	1	
265427A	Solenoid, 09G 4-5-6 Clutch (K2)(2 Prong Black Connector)(3.331"Long) (Cast # 15BY5D01134)(W/Black Stripe) 2003-Up	1	
265428A	Solenoid, 09G Line Pressure (N93)(2 Prong Grey Connector)(3.331"Long) (Cast # 11CB5D01041)(W/Black Stripe) 2003-Up	1	
265436A	Sensor, 09G OSS (2 Prong Blue Connector) 2003-Up	1	
265438A	Sensor, 09G ISS (2 Prong White Connector) 2003-Up	1	
265440A	Solenoid, 09G 2-6 Clutch (B1)(2 Prong Black Connector)(3.331"Long)(Cast # 10CP5D04398) (No Stripe) 2003-Up	1	
265446-1A	Wire Harness, 09G Internal (6 Prong Case Connector)(W/2 Two Prong Connector & W/Temperature Sensor) 2003-Up	1	
265446-1B	Wire Harness, 09G Internal (8 Prong Case Connector) 2002-5/2004	1	
265446A	Wire Harness, 09G Internal (14 Prong Case Connector)(W/8 Two Prong Connectors) 2003-Up	1	

PART #	HARDPARTS	QTY	REFERENCE #
265500A	Pump Assembly, 09G (9 Inner Gear Lobes, 10 Outer Gear Lobes) 2003-Up	1	
265500AA	Pump Assembly, 09G (11 Inner Gear Lobes, 12 Outer Gear Lobes) 2003-Up	1	
265510A	Pump BodyW/Gears, 09G (9 Inner Gear Lobes)(10 Outer Gear Lobes)(.441" Thick)(3.483"OD) 2003-Up	1	

© Whatever It Takes Transmission Parts. Inc.

265510AA.....Pump Body W/Gears, 09G (11 Inner Gear Lobes)(12 Outer Gear Lobes)(.364" Thick)(3.236"OD) 2003-Up 1
265520A.....Stator, 09G Pump (Cast Iron)(8 Bolts To Body) 2003-Up (Fits 265510A Body) 1
265520AA.....Stator, 09G Pump (Cast Iron)(8 Bolts To Body) 2003-Up (Fits 265510AA Body) 1
265530A.....Pump Gear Set, 09G (.441"Thick)(10 Outer Gear Lobes)(9 Inner Gear Lobes) 2003-Up 1
265546A.....Apply Ring, 09G 2-6 Clutch (B1) (Steel)(2.156"Thick)(7 1/4"OD) 2003-Up 1
265552A.....Drum, 09G 1-2-3-4 Clutch (K1) (Steel)(5 Clutch)(2.250" Tall)(6 1/8"OD) 2003-Up 1
265552AA.....Drum, 09G 1-2-3-4 Clutch (K1) (Steel)(5 Clutch)(2.525" Tall)(6 1/8"OD) 2003-Up 1
265552AB.....Drum, 09G 1-2-3-4 Clutch (K1) (Steel)(6 Clutch)(2.355" Tall)(6 1/8"OD) 2003-Up 1
265554A.....Drum W/Shaft, 09G 4-5-6 Clutch (K2)(3 Clutch)(1.685" Overall Thickness Of Drum) 2003-Up 1
265554AA.....Drum W/Shaft, 09G 4-5-6 Clutch (K2)(4 Clutch)(1.792" Overall Thickness Of Drum) 2003-Up 1
265555A.....Drum, 09G 3-5 Reverse Clutch (K3)(3 Clutch)(Stamped Steel)(6 1/2"OD)(1.77"ID Ring Bore) (Uses Steel Piston)(1.560" From Top Of Snap Ring Groove To Top Of Drum) 2003-Up 1
265555AA.....Drum, 09G 3-5 Reverse Clutch (K3)(3 Clutch)(Stamped Steel)(6 1/2"OD)(1.77"ID Ring Bore) (Uses Aluminum Piston)(1.460" From Top Of Snap Ring Groove To Top Of Drum) 2003-Up 1
265560A.....Piston Kit, 09G 2-6 Clutch (B1) (Aluminum Piston) 2003-Up 1
265562A.....Piston Kit, 09G 1-2-3-4 Clutch (K1)(W/Aluminum Piston & Bonded Retainer)(For 5 Clutch Drum) 2003-Up 1
265562AB.....Piston Kit, 09G 1-2-3-4 Clutch (K1)(With Steel Piston & Bonded Retainer)(For 6 Clutch Drum) 2003-Up 1
265564A.....Piston Kit, 09G 4-5-6 Clutch (K2) (W/Bonded Piston & Retainer) 2003-Up 1
265565A.....Piston Kit, 09G 3-5 Reverse Clutch (K3)(Steel Piston)(Bonded Retainer) 2003-Up 1
265565AA.....Piston Kit, 09G 3-5 Reverse Clutch (K3)(Aluminum Piston)(Bonded Retainer) 2003-Up 1
265567A.....Piston Kit, 09G Low/Reverse Clutch (B2)(Aluminum Piston Cast # F010) 2003-Up 1
265582A.....Planet, 09G Front (W/3-5 Reverse Clutch (K3) Hub)(5 Gear Steel)(Uses A 45 Teeth Sun Gear) 2003-Up 1
265584A.....Planet, 09G Rear (4 Gear On Front Side, 8 Gear on Rear Side)(Uses A 30 Teeth Rear Sun Gear) (With Low/Reverse (B2) Clutch Hub W/48 Splines, Missing 8 Splines) 1
(With 4-5-6 (K2) Clutch Hub W/50 Splines, Missing 5 Splines) 2003-Up
265584AA.....Planet, 09G Rear (4 Gear On Front Side, 8 Gear On Rear Side)(Uses A 30 Teeth Rear Sun Gear) (With Low/Reverse (B2) Clutch Hub W/56 Splines) (With 4-5-6 (K2) Clutch Hub W/52 Splines, Missing 8 Splines) 2003-Up 1
265592A.....Ring Gear, 09G Front Planet W/Input Shaft (81 Teeth Ring Gear) 2003-Up 1
265594A.....Ring Gear, 09G Rear Planet (78 Teeth)(1.465"Thick) 2003-Up 1
265604A.....Hub, 09G Rear Planet Ring Gear (.396"Thick)(4.494"OD) 2003-Up 1
265612A.....Sun Gear, 09G Front Planet (45 Teeth)(.577"Thick)(2.485"OD) 2003-Up 1
265614A.....Sun Gear, 09G Rear Planet (Rear)(30 Teeth, 1 Narrow Groove In Center Of Gear)(3.530"Long) 2003-Up 1
265614AA.....Sun Gear, 09G Rear Planet (Rear)(30 Teeth, 2 Grooves)(3.530" Long) 2003-Up 1
265614AB.....Sun Gear, 09G Rear Planet (Rear)(30 Teeth, 1 Wide Groove Away From The Shaft)(3.260" Long) 2003-Up 1
265614AD.....Sun Gear, 09G Rear Planet (Rear)(26 Teeth, 3 Narrow Grooves)(3.830" Long) 2003-Up 1
265622A.....Housing, 09G 2-6 Clutch (B1)(Steel)(A Snap Ring Holds This To The Center Support) 2003-Up 1
265624A.....Hub, 09G 3-5 Reverse Clutch (K3) Driving (40 Outer Teeth) 2003-Up 1
265632A.....Center Support, 09G (6 Bolt, Cast Iron)(Cast # 5317) 2003-Up 1
265644A.....Sprag Assembly, 09G Low/Reverse (F1) (20 Rollers)(14 Outer Lugs)(Plastic Cage) 2003-Up 1
265689A.....Oil Baffle, 09G Pinion Shaft To Case (Tin) 2003-Up 1
265698A.....Oil Baffle, 09G Differential To Bell Housing (Tin, 3 Bolt) 2003-Up 1
265710A.....Gear, 09G Drive Transfer (49 Teeth)(W/66 Teeth Ring Gear Hub) 2003-Up 1
265712A.....Gear, 09G Driven Transfer (52 Teeth)(W/13 Parking Lugs) 2003-Up 1
265716A.....Differential Housing, 09G Less Ring Gear (Uses A 25 & A 30 Roller Bearing) 2003-Up 1
265720A.....Ring Gear, 09G Differential (61 Teeth, 4 Groove)(12 Bolt Holes) 2003-Up 1
265730A.....Pinion, 09G (15 Teeth, 4 Groove) (6 1/4"Long) 2003-Up 1
265740AA.....Valve Body, 09G (W/2 Pressure Switches)(Oil Cooler Is On Transmission Case) 2003-6/2004 ..... 1 ..... 95-111A
265740AB.....Valve Body, 09G (W/2 Pressure Switches)(Oil Cooler Is Seperate From Transmission) 2003-6/2004 1
265740AC.....Valve Body, 09G (W/No Pressure Switches)(Oil Cooler Is On Transmission Case) 7/2004-Up 1
265740AD.....Valve Body, 09G (W/No Pressure Switch)(Oil Cooler Is Seperate From Transmission) 7/2004-Up 1

PART #	VALVE BODY COMPONENTS	QTY	REFERENCE #
S265741-3K	Spring Adjuster Kit, AWTF60SN (09G/09K/09M/6F21WA)(For Valve Springs) (Contains: 4 Spring Adjusters With O-Rings)(Sonnax)	1	
S255741A-6K	End Plug Kit, 09G (Small, 9mm Plugs)(Contains: 5 End Plugs & 7 O-Rings) 2003-Up (Sonnax)	1	15741-35K
S255741AA-6K	End Plug Kit, 09G (Large, 11mm Plugs)(Contains: 5 End Plugs & 7 O-Rings) 2003-Up	1	15741-36K
S255741CK	Clutch Control Valve Kit, 09G Lock-Up (Contains: Sleeve, Valve, Spring, Spacer, Plunger Valve, & PlungerSleeve) 2003-Up (Sonnax)(Must Use T-F-15741-TL29 & T-F-15741-TL29PL & T-VB-FIX)	1	15741-29K
T-F-15741-TL29	Reamer For S255741CK	1	F-15741-TL29

© Whatever It Takes Transmission Parts. Inc.

PART #	VALVE BODY COMPONENTS	QTY	REFERENCE #
T-F-15741-TL29PL	Adapter Plate Kit For T-VB-FIX (Needed For S255741CK & S265741LK)	1	F-15741-TL29PL
S265741DK	Valve Kit, 09G 3-5-Reverse Clutch (K3)(Contains: Valve, Sleeve & Spring)(Sonnax)(Must Use T-F-15741-TL8)	1	
T-F-15741-TL8	Tool Kit, (Use With S265741DK)(Sonnax)	1	
S26541EK	Valve Kit, AWTF60SC (09G) K2 Clutch Control (Contains: Valve, Sleeve, & Spring)(Sonnax) (Must Use T-F-15741-TL15)	1	
T-F-15741-TL15	Tool For S265741EK	1	
S265741GK	Valve Kit, 09G 2-6 Clutch (B1) Control (Contains: Valve, Sleeve & Spring)(Sonnax) (Must Use T-F-15741-TL22)	1	
T-F-15741-TL22	Tool Kit, (Use With S265741GK)(Sonnax)	1	
S255741LK	Clutch Control Valve Kit, 09G C1 & K1 (Contains: Sleeve, Spring & Valve) 2003-Up (Sonnax) (Must UseT-F-15741-TL25 & T-VB-FIX)	1	15741-25K
T-F-15741-TL25	Reamer For S255741LK		F-15741-TL25
S265741LK	Valve Kit, 09G Solenoid Modulator (Sonnax)(Used In 2 Locations)(Contains 1 each: Solenoid Modulator Valve, Solenoid Modulator Sleeve, Spring & Plug)(Requires: T-F-15741-TL18, T-VB-FIX)(Requires T-F-15741-TL29PL If Reaming Upper Valve Body #2)	1	15741-18K
T-F-15741-TL18	Tool Kit For S167741EHK & S265741LK (Contains: Reamer, Reamer Jig & Guide Pin)	1	F-15741-TL18
S265741MB	Manual Valve, AWTF60SN (09G) (Oversized)(Sonnax)(Must Use Reamer #T-F-15741-TL41)	1	
T-F-15741-TL41	Reamer For S265741MB	1	
T-35199	Tool Set, Aisin Solenoid (AW55-50, TF60SN, TR60SN, TF80SC)(Includes: Carrying Case, Instructional CD & 11 Piece Tool Set)(Fits Large Canister Solenoids, Not Small Canister Solenoids)		
S265741PAK	Valve Kit, AWTF60SN (09G) Oversized Pressure Regulator Valve, Spring, Boost Valve & Sleeve)(Sonnax)(Must Use T-F-15741-TL)	1	
T-F-15741-TL	Reamer Kit, For S264741PAK	1	
S265741PSK	Valve Kit, AWTF60SN (09G) Secondary Pressure Regulator Valve (Includes: Inner & Outer Sleeve, Valve, Spring, & Retainer)(Sonnax)(Must Use T-F-15741-TL11)(Also Fits 09K/09M/6F21WA)	1	
T-F-15741-TL11	Reamer Kit, For S265741PSK	1	
S265741TK	Valve Kit, AWTF60SN (06G/09M/09K) Boost (Contains: Valve & Sleeve)(Sonnax)	1	

PART #	HARDPARTS (Continued)	QTY	REFERENCE #
265750A	Bell Housing, 09G (Starter At 2:00)(Cast # 09G 321 107 A) 2003-Up	1	
S265759-2K	Ring Tower Sleeve, 09G/09K (K2 Clutch)(In Rear Of Case)(Sonnax)	1	
265760A	Case, 09G (Cast # 09G 321 105) 2003-Up	1	
265765A	Pan, 09G Bottom (8 Bolt)(2 5/8" Deep On The Deep End) 2003-Up	1	
265776AK	Bolt Set, 09G Bell Housing To Case (21 Pieces) 2003-Up	1	
265777AK	Bolt Set, 09G Pump Body To Case (6 Pieces) 2003-Up	1	
265778AK	Bolt Set, 09G Pump Stator To Body (8 Pieces) 2003-Up	1	
265779AK	Bolt Set, 09G Bottom Pan (8 Pieces) 2003-Up	1	
265783AK	Bolt Set, 09G Center Support To Case (6 Pieces) 2003-Up	1	
265786AK	Bolt Set, 09G Differential Ring Gear To Differential Housing (12 Pieces) 2003-Up	1	
265795A	Nut, 09G Drive Transfer Gear Retaining (.222"Thick)(24 Outer Notches) 2003-Up	1	
265850A	Cushion, 09G 2-6 Clutch (B1) (.039"Thick)(7 1/4"OD) 2003-Up	1	
265861A	Snap Ring, 09G (Some) Holds 2-6 Clutch (B1) Housing To Center Support (.038"Thick) (6 1/2"OD)(W/2 Hooked Ends) 2003-Up (Not Used In All Units)	1	
265862A	Snap Ring, 09G Holds 2-6 Clutch (B1) Spring Retainer In (.046"Thick)(6 13/16"OD) 2003-Up	1	
265873A	Snap Ring, 09G Holds 1-2-3-4 Clutch (K1) Pressure Plate In Drum (.063"Thick)(6 1/4"OD) 2003-Up	1	
265874A	Snap Ring, 09G Holds 1-2-3-4 Clutch (K1) Retainer In Drum (.059"Thick)(2.033"OD) 2003-Up	1	
265876A	Snap Ring, 09G Holds 4-5-6 Clutch (K2) Pressure Plate In Drum (.063"Thick)(6 1/8"OD) 2003-Up	1	
265877A	Snap Ring, 09G Holds 4-5-6 Clutch (K2) Spring Retainer In (.046"Thick)(2.158"OD) 2003-Up	1	
265878A	Snap Ring, 09G Holds 3-5 Reverse Clutch (K3) Pressure Plate In Drum (.062"Thick)(6 1/2"OD) 2003-Up	1	
265879A	Snap Ring, 09G Holds 3-5 Reverse Clutch (K3) Spring Retainer In Drum (.057"Thick)(2.025"OD) 2003-Up	1	
265886A	Snap Ring, 09G Holds Low/Reverse Clutch (B2) Spring Retainer In Case (.062"Thick) (7 1/16"OD) 2003-Up	1	
265887A	Snap Ring, 09G Holds Low/Reverse Sprag (F1) To Case (.047"Thick)(7 3/8"OD) 2003-Up	2	
265889A	Snap Ring, 09G Holds Rear Planet Ring Gear Hub To Ring Gear (.047"Thick)(4.870"OD) 2003-Up	1	
265898A	Snap Ring, 09G Drive Transfer Gear (.046"Thick)(4.050"OD) 2003-Up	1	
265926A	Spring, 09G B1 Accumulator (Pink) 2003-Up	1	
265927A	Piston, 09G B1 Accumulator (1.875"Long)(.944"OD) 2003-Up	1	
S255927AK	Accumulator Piston Kit, 09G Clutch/Band/Line Accumulator (Contains: 1 Accumulator Piston & 1 O-Ring) 2003-Up (Sonnax)	1	
265960A	Piston, 09G 2-6 Clutch (B1)(Sets In Pump Body)(Aluminum)(.532"Thick)(6 3/8"OD) 2003-Up	1	

© Whatever It Takes Transmission Parts. Inc.

265960AK.....Piston Kit, 09G/09K/09M (Bonded) 2003-Up .....1 .....
265962A.....Piston, 09G 1-2-3-4 Clutch (K1) (Aluminum 5 Clutch)(W/20 Spring Pockets)(6.00”OD) 2003-Up .1 .....
265962AB.....Piston, 09G 1-2-3-4 Clutch (K1)(Steel 6 Clutch)(W/20 Spring Pockets)(5.745”OD) 2003-Up .....1 .....
265964A.....Piston, 09G 4-5-6 Clutch (K2) (Bonded) 2003-Up .....1 .....
265965A.....Piston, 09G 3-5 Reverse Clutch (K3) (Steel)(28 Spring Pockets)(10 Outer Teeth) 2003-Up.....1 .....
265965AA.....Piston, 09G 3-5 Reverse Clutch (K3) (Aluminum)(28 Spring Pockets)(10 Outer Teeth) 2003-Up..1 .....
265967A.....Piston, 09G Low/Reverse Clutch (B2) (Aluminum)(Cast # F010) 2003-Up .....1 .....
265970A.....Spring Retainer, 09G 2-6 Clutch (B1) Return (12 Springs)(7 1/2”OD) 2003-Up .....1 .....
265972A.....Spring, 09G 1-2-3-4 Clutch (K1) Return (20 Springs)(3.835”OD) 2003-Up .....1 .....
265972AB.....Spring, 09G 1-2-3-4 Clutch (K1) Return (20 Springs)(3.675”OD) 2003-Up .....1 .....
265974-1A.....Seat, 09G 4-5-6 Clutch (K2) Spring (24 Spring Pockets)(3.925”OD) 2003-Up.....1 .....
265974A.....Spring, 09G 4-5-6 Clutch (K2) Return (24 Springs)(3.898”OD) 2003-Up .....1 .....
265975A.....Spring, 09G 3-5 Reverse Clutch (K3) Return (28 Springs)(3.830”OD) 2003-Up .....1 .....
265977A.....Spring, 09G Low/Reverse Clutch (B2) Return (13 Springs)(6 3/4”OD) 2003-Up.....1 .....
265982A.....Retainer, 09G 1-2-3-4 Clutch (K1) Return Spring (Bonded)(4.632”OD)(Has 4 Notches Cut Into
.....The ID) 2003-Up .....1 .....
265982AB.....Retainer, 09G 1-2-3-4 Clutch (K1) Return Spring (Bonded)(4.632”OD)(Has No Notches Cut Into
.....The ID) 2003-Up .....1 .....
265984A.....Retainer/Piston, 09G 4-5-6 Clutch (K2) Spring (Bonded)(4.296”OD) 2003-Up .....1 .....
265985A.....Retainer, 09G 3-5 Reverse Clutch (K3) Spring (Bonded)(4.638”OD) 2003-Up .....1 .....
265991-1A.....Linkage Assembly, 09G Internal 2003-Up.....1 .....
265991A.....Linkage Rod, 09G (14 1/16” Long) 2003-Up.....1 .....
265994A.....Park Pawl Actuator, 09G 2003-Up .....1 .....
265995A.....Park Pawl Assembly, 09G 2003-Up .....1 .....
265998-1A.....External Cooler Adapter, 09G (Used To Replace The OE Cooler & Put On An Aftermarket
.....External Cooler) .....1 .....
265998A.....Oil Cooler, 09G (Bolts On Top Of Bell Housing)(Cast #09G 409 061) 2003-Up .....1 .....
265999A.....Tube Set, 09G Lube (3 Tubes) 2003-Up.....1 .....

© Whatever It Takes Transmission Parts. Inc.

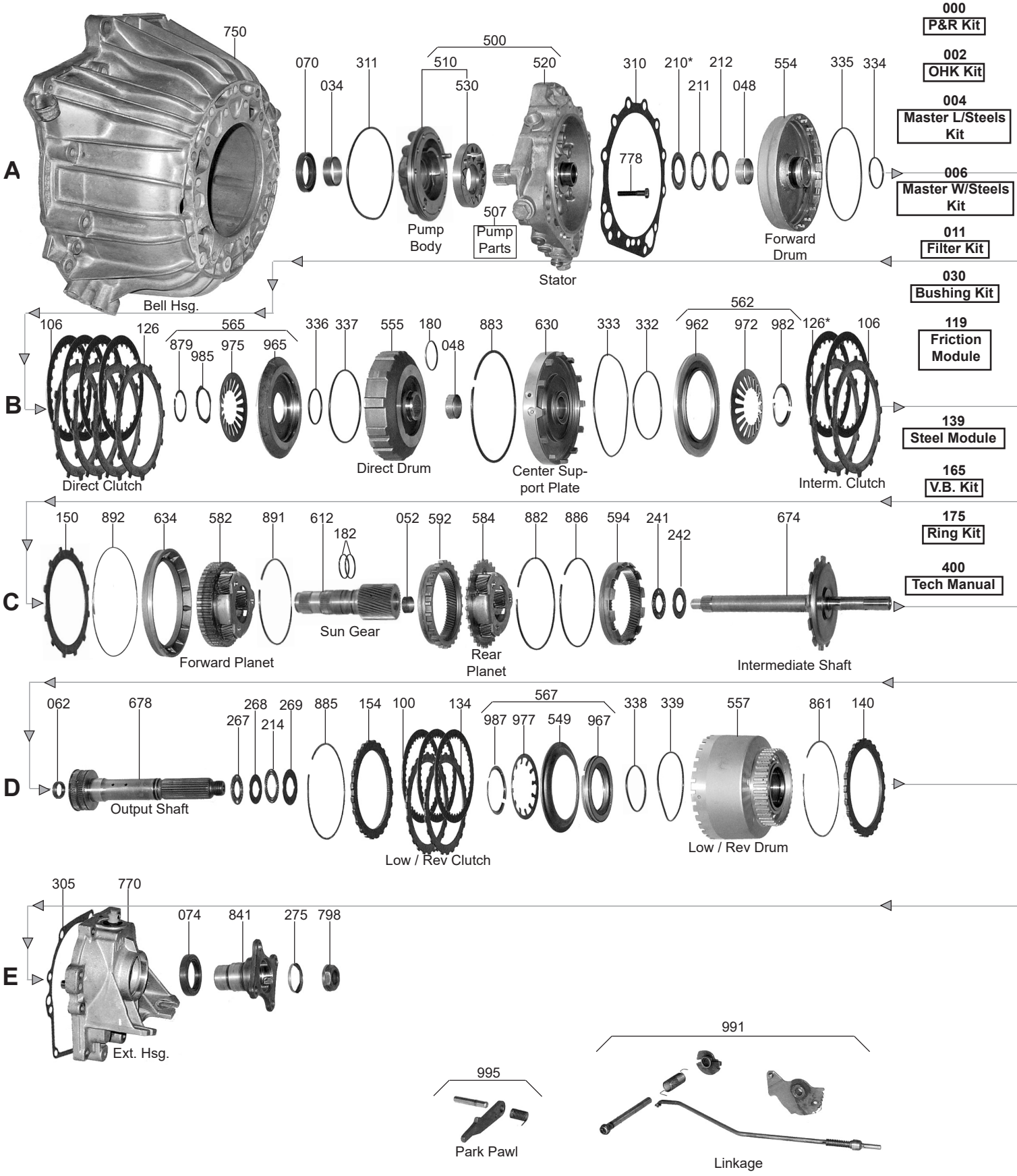
A
B
C
D
E
750
Bell Hsg.
070
034
311
500
510
530
520
507
Pump Body
Pump Parts
Stator
310
778
210*
211
212
048
554
335
334
Forward Drum
106
126
565
879
985
975
965
Direct Clutch
336
337
555
180
048
Direct Drum
883
630
Center Support Plate
333
332
562
962
972
982
126*
106
Interm. Clutch
150
892
634
582
891
Forward Planet
612
182
Sun Gear
052
592
584
Rear Planet
882
886
594
241
242
674
Intermediate Shaft
062
678
Output Shaft
268
267
214
269
885
154
100
134
Low / Rev Clutch
567
987
977
549
967
338
339
557
Low / Rev Drum
861
140
305
770
074
841
275
798
Ext. Hsg.
995
Park Pawl
991
Linkage
000 P&R Kit
002 OHK Kit
004 Master L/Steels Kit
006 Master W/Steels Kit
011 Filter Kit
030 Bushing Kit
119 Friction Module
139 Steel Module
165 V.B. Kit
175 Ring Kit
400 Tech Manual

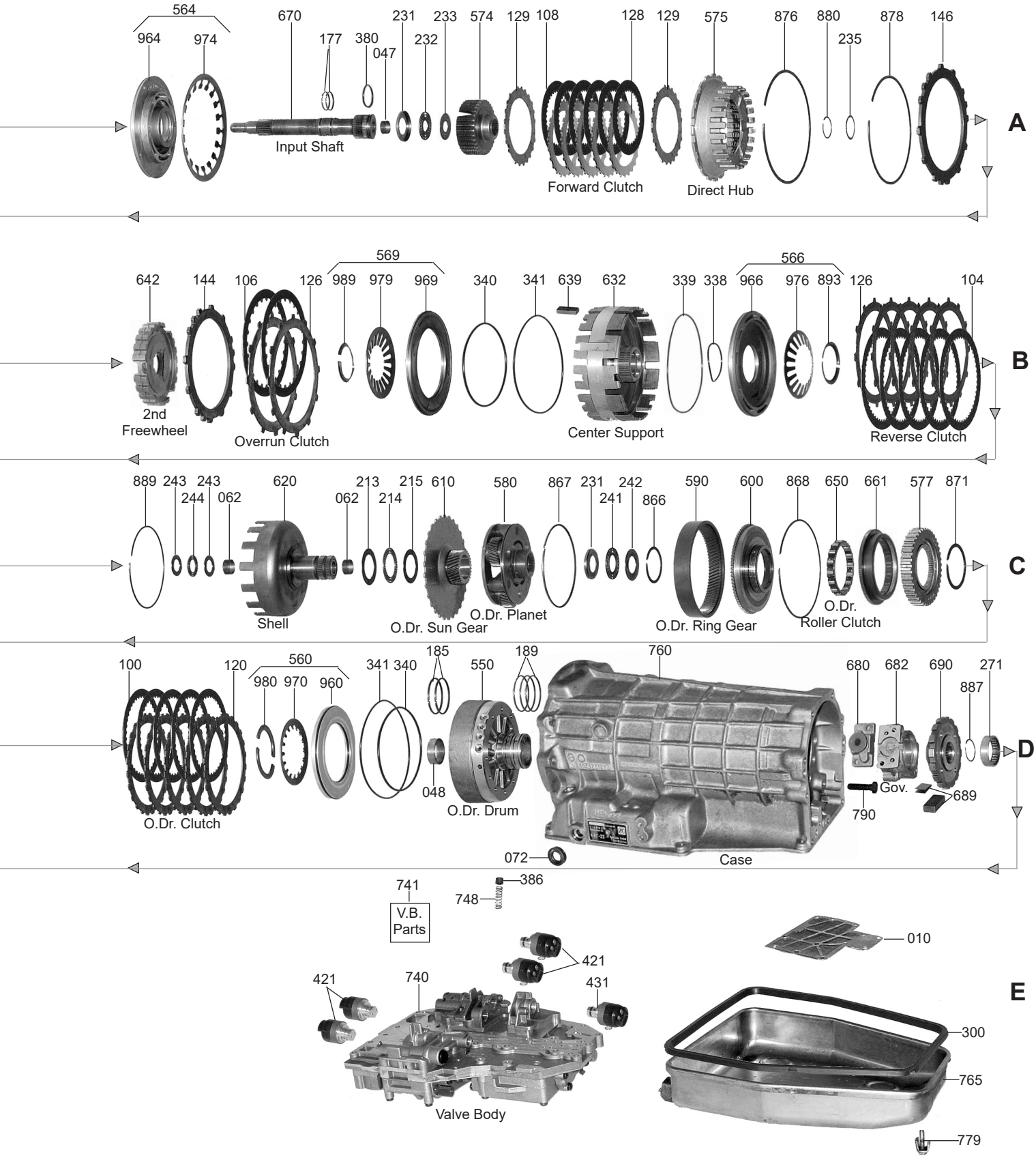

© Whatever It Takes Transmission Parts. Inc.

PART #	PAPER & RUBBER KIT	QTY.	REFERENCE #
69000	Paper & Rubber Kit, ZF3HP22 Combo 1976-84	1	1043-298-923
69000A	Paper & Rubber Kit, ZF4HP22 1984-Up	1	1043-298-092
69000E	Paper & Rubber Kit, ZF4HP24 1988-Up	1	1043-298-072
69000EA	Paper & Rubber Kit, ZF4HP24FLA (Audi) V-8 (AWD) 1989-94	1	

PART #	OVERHAUL KITS	QTY.	REFERENCE #
69002	Overhaul Kit, ZF3HP22 Combo 1976-84	1	
69002A	Overhaul Kit, ZF4HP22/ZF4HP24 1984-Up	1	1043-298-095
69002EA	Overhaul Kit, ZF4HP24A (Audi Quattro V-8)(With Transfer Case Parts) 1989-94	1	1043-298-084

PART #	MASTER L/STEEL KIT	QTY.	REFERENCE #
69004	Master L/Steels Kit, ZF3HP22 1976-84	1	
69004A	Master L/Steels Kit, ZF4HP22 1984-Up	1	
69004E	Master L/Steels Kit, ZF4HP24 1988-Up	1	
69004EA	Master L/Steels Kit, ZF4HP24FLA Audi V-8 (AWD) (With Transfer Case Parts) 1989-94	1	

PART #	MASTER W/STEEL KIT	QTY.	REFERENCE #
69006	Master W/Steels Kit, ZF3HP22 1976-84	1	
69006A	Master W/Steels Kit, ZF4HP22 1984-Up	1	
69006E	Master W/Steels Kit, ZF4HP24 1988-Up	1	
69006EA	Master W/Steels Kit, ZF4HP24FLA Audi V-8 (AWD) (With Transfer Case Parts) 1989-94	1	

PART #	FILTER	QTY.	REFERENCE #
69010	Filter, ZF3HP22 1976-84	1	24-34-1-209-791
69010A	Filter, ZF4HP22 (No Pick-Up Tube) 1984-Up	1	24-31-1-218-550
69010B	Filter, ZF4HP22 (With 1” Long Pick-Up Tube) 1985-Up	1	24-31-1-218-204
69010E	Filter, ZF4HP24 Land Rover 1988-Up	1	1043-226-037
69010EB	Filter, ZF4HP24A (Audi) (With 2 1/2” Long Pick-Up Tube)	1	1043-226-035

PART #	FILTER KIT	QTY.	REFERENCE #
69011	Filter Kit, ZF3HP22 1976-84	1	
69011A	Filter Kit, ZF4HP22 (No Pick-Up tube)	1	
69011B	Filter Kit, ZF4HP22 (With 1 Pick-Up Tube)	1	
69011E	Filter Kit, ZF4HP24 Land Rover 1988-Up	1	
69011EB	Filter Kit, ZF4HP24FLA Audi (2 1/2” Tube)	1	

PART #	BUSHINGS	QTY.	REFERENCE #
69030	Bushing Kit, ZF3HP22 1976-84	1	
69030A	Bushing, ZF4HP22 1984-Up	1	
69034	Bushing, ZF3HP22 / ZF4HP22 Pump 1976-93	1	750101031
69034B	Bushing, ZF4HP22 / ZF4HP24 Pump 1994-Up	1	0501-311-812
69048	Bushing, ZF4HP22 Forward Drum, Overdrive Drum, & Center Support Plate	1-3	
69047	Bushing, ZF3HP22 / ZF4HP22 Input Shaft	1	
69052	Bushing, ZF3HP22 / ZF4HP22 Sun Gear	1	
69062A	Bushing, ZF4HP22 Output Shaft & Shell With Shaft	1-3	

PART #	METAL CLAD SEALS	QTY.	REFERENCE #
69070	Seal, ZF3HP22 / ZF4HP22 Front 1976-Up	1	24-311-207-621
69072	Seal, ZF3HP22 / ZF4HP22 Manual Lever Seal 1976-Up	1	750110062
69074	Seal, ZF3HP22 / ZF4HP22 Extension Housing (BMW, Puegeot)(2.292”OD)	1	046-504-4002H
69074AA	Seal, ZF4HP22 Extension Housing (Land Rover) 1988-97	1	
69074AB	Seal, ZF4HP22 Extension Housing (Land Rover) 1998-02	1	
56074B	Seal, ZF4HP22 Extension Housing (Lincoln With Boot)	1	E2ZZ-7052-A

PART #	FRICTION CLUTCH	QTY.	REFERENCE #
69100	Friction, ZF4HP22 Low/Reverse & Overdrive Clutch (.061”) 40 Teeth (E/F Pack)(Also Fits ZF4HP24 A Clutch #108)	8	24-23-1-214-441
69104	Friction, ZF3HP22 / ZF4HP22 Reverse Clutch (.063”) 48 Teeth (D Pack)	4-5	24-23-1-205-955
69104E	Friction, ZF4HP22 Reverse Clutch (.061”) 58 Teeth (D Pack)	5	1043-217-015

© Whatever It Takes Transmission Parts. Inc.

69106	Friction, ZF3HP22 / ZF4HP22 Direct, Intermediate, & Overrun Clutch (.059") 24 Teeth (B & C Pack)	6-8	24-23-1-215-770
69108	Friction, ZF3HP22 / ZF4HP22 Forward Clutch (.061") 34 Teeth (A Pack)	4-6	24239-059-361
69108E	Use 69100	4-6	1043-202-189
A69108PPK	Friction & Steel Kit, ZF4HP22 Forward Clutch (.061") 34 Teeth (A Pack) (6 Frictions & 8 Steels) (Alto) (Power Pack) (Kevlar) (HI-Performance)	1	
69119A	Friction Module, ZF4HP22	1	
69119E	Friction Module, ZF4HP24/ZF4HP24A 1988-Up	1	

PART #	STEEL CLUTCH	QTY.	REFERENCE #
69120	Steel, ZF4HP22 Overdrive Clutch (.083") 24 Teeth (F Pack)	4	2431-215-453
69126	Steel, ZF3HP22 / ZF4HP22 Direct, Intermediate, Overrun, & Reverse Clutch (.082") 12 Teeth (B,C & D Pack)	AR	24231-209-825
69126A	Steel, ZF3HP22 / ZF4HP22 Direct, Intermediate, Overrun, & Reverse Clutch (.060") 12 Teeth (B,C & D Pack)	AR	24231-209-824
69126B	Steel, ZF3HP22 / ZF4HP22 Direct, Intermediate, Overrun, & Reverse Clutch (.071") 12 Teeth (B,C & D Pack)	11-13	24231-205-935
69126C	Steel, ZF3HP22 / ZF4HP22 Direct, Intermediate, Overrun, & Reverse Clutch (.047") 12 Teeth (B,C & D Pack)(4.693"ID)	AR	24231-209-842
69126CA	Steel, ZF3HP22 / ZF4HP22 Direct, Intermediate, Overrun, & Reverse Clutch (.047") 12 Teeth (Waved) (B,C & D Pack)	AR	1043-302-036
69126CB	Steel, ZF3HP22 / ZF4HP22 Direct, Intermediate, Overrun, & Reverse Clutch (.158") 12 Teeth (B,C & D Pack)	AR	24231-217-334
69126D	Steel, ZF4HP24 Reverse Clutch (.047") 12 Teeth (D Pack) (4.810"ID) 1987-Up	6	1043-317-040
69126DA	Steel, ZF4HP24 Reverse Clutch (.059") 12 Teeth (D Pack)	AR	1043-317-061
69126DB	Steel, ZF4HP24 Reverse Clutch (.071") 12 Teeth (D Pack)	AR	1043-317-062
69126DC	Steel, ZF4HP24 Reverse Clutch (.083") 12 Teeth (D Pack)	AR	1043-317-063
69128	Steel, ZF3HP22 / ZF4HP22 Forward Clutch (.071") 24 Teeth (A Pack)	5-6	24231-205-917
69128A	Steel, ZF3HP22 / ZF4HP22 Forward Clutch (.060") 24 Teeth (A Pack)	AR	24231-205917A
69128B	Steel, ZF3HP22 / ZF4HP22 Forward Clutch (.047") 24 Teeth (A Pack)	AR	24231-205-919
69129	Steel, ZF3HP22 / ZF4HP22 Forward Clutch (.040") 24 Teeth (Waved) (A Pack)	2	1043-202-001
69129A	Steel, ZF4HP22 Forward Clutch (.064") 21 Teeth (Waved) (A Pack)	1	
69129D	Steel, ZF4HP22 Forward Clutch (.055") 24 Teeth (Waved) (A Pack)	2	1043-330-140
69134	Steel, ZF4HP22 Low/Reverse Clutch (.059") 24 Teeth (E Pack)	4	24231-215-440
69139A	Steel Module, ZF4HP22 1983-Up	1	
69139E	Steel Module, ZF4HP24 1988-Up	1	

PART #	CLUTCH PRESSURE PLATES	QTY.	REFERENCE #
69140	Pressure Plate, ZF4HP22 Overdrive Clutch	1	1043-330-023
69144	Pressure Plate, ZF3HP22 / ZF4HP22 Overrun Clutch	1	301302004
69146	Pressure Plate, ZF3HP22 / ZF4HP22 Direct Clutch	1	
69150	Pressure Plate, ZF3HP22 / ZF4HP22 Reverse Clutch	1	301317017
69154	Pressure Plate, ZF4HP22 Low/Reverse Clutch	1	1043-330-073

PART #	VALVE BODY KITS	QTY.	REFERENCE #
S69165A	Valve Body Kit, ZF4HP22	1	

PART #	OIL SEALING RINGS	QTY.	REFERENCE #
69175A	Ring Kit, ZF3HP22 1976-84	1	1043298942
69175B	Ring Kit, ZF4HP22 1984-Up	1	4HP22MPSR
69175E	Ring Kit, ZF4HP24 1988-Up	1	
69177A	Ring, ZF3HP22 Input Shaft (Metal) 1976-84	1	
69177B	Ring, ZF4HP22 Input Shaft (Metal) 1984-Up	2	750113019
69177BT	Ring, ZF4HP22 Input Shaft (Teflon) 1984-Up	1	
69180	Ring, ZF3HP22 / ZF4HP22 Direct Clutch Drum (Metal)	1	301302051
69182A	Ring, ZF3HP22 / ZF4HP22 Sun Gear Shaft (Metal)	2	750113021
69185B	Ring, ZF4HP22 Low/Reverse Clutch (Metal)	2	750113026
69189A	Ring, ZF3HP22 Governor (Metal) 1976-84	2	734401137
69189B	Ring, ZF4HP22 Governor (Metal) 1984-Up	1-3	750113005
69189V	Ring, ZF4HP22 Governor (Viton)	1-3	501306311
69189VK	Ring Kit, ZF4HP22 Governor (Viton) Contains 3 Rings	1	501306311

© Whatever It Takes Transmission Parts. Inc.

PART #	WASHERS & BEARINGS	QTY.	REFERENCE #
69210	Race, ZF3HP22/ZF4HP22 Stator To Front Drum (Front) .042”	1	0730104149
69210A	Race, ZF3HP22/ZF4HP22 Stator To Front Drum (Front) .040”	1	0301302047
69210B	Race, ZF3HP22/ZF4HP22 Stator To Front Drum (Front) .059”	1	0730104150
69210C	Race, ZF3HP22/ZF4HP22 Stator To Front Drum (Front) .056”	1	0730104151
69210D	Race, ZF3HP22/ZF4HP22 Stator To Front Drum (Front) .081”	1	0730104152
69210E	Race, ZF3HP22/ZF4HP22 Stator To Front Drum (Front) .084”	1	0730104153
69210F	Race, ZF3HP22/ZF4HP22 Stator To Front Drum (Front) .090”	1	0730104154
69210G	Race, ZF3HP22/ZF4HP22 Stator To Front Drum (Front) .098”	1	0730104155
69210H	Race, ZF3HP22/ZF4HP22 Stator To Front Drum (Front) .107”	1	0730104156
69210J	Race, ZF3HP22/ZF4HP22 Stator To Front Drum (Front) .115”	1	0730104157
69210L	Race, ZF3HP22/ZF4HP22 Stator To Front Drum (Front) .125”	1	0730104158
69211	Bearing, ZF3HP22/ZF4HP22 Stator To Front Drum	1	24231215419
69212	Race, ZF3HP22/ZF4HP22 Stator To Front Drum (Rear)	1	0501311020
69213	Race, ZF3HP22/ZF4HP22 Bowl With Shaft To Flange (Front)	1	0301314005
69214	Bearing, ZF3HP22/ZF4HP22 Bowl With Shaft To Flange (BMW, Peugeot) Also Fits ZF4HP22 Output Shaft To Rear Drum	1-2	0301332002
69214A	Bearing, ZF4HP22 Bowl With Shaft To Flange (Lincoln)	1	0750115151
69215	Race, ZF3HP22 Bowl With Shaft To Flange (Rear)	2	1043331062
69231	Race, ZF4HP22 Forward Drum To Hub (Front) & Overdrive Planet To Output Shaft (Front)	1	1043332058
69232	Washer, ZF3HP22 Forward Drum To Hub (Plastic)	1	0301302020
69232A	Bearing, ZF4HP22 Forward Drum To Hub	1	0750115149
69233	Washer, ZF3HP22 Forward Drum To Hub (Steel)	1	0301302041
69233A	Race, ZF4HP22 Forward Drum To Hub (Rear)	1	
69235	Washer, ZF3HP22/ZF4HP22 Snap Ring To O-Ring	1	0301302051
69241	Bearing, ZF3HP22/ZF4HP22 Sun Gear To Intermediate Shaft	1	0750115150
69242	Race, ZF3HP22/ZF4HP22 Sun Gear To Intermediate Shaft (Also Fits ZF4HP22 Overdrive Planet To Output Shaft (Rear)	1-2	0301332025
69243	Race, ZF3HP22 Intermediate Shaft To Output Shaft	2	0301332020
69243A	Race, ZF4HP22 Intermediate Shaft To Shell	2	0635290026
69244	Bearing, ZF3P22 Intermediate Sahft To Output Shaft	1	
69244A	Bearing, ZF4HP22 Intermediate Shaft To Shell	1	0635302051
69267	Race, ZF4HP22 Output Shaft To Rear Drum (Front) (BMW, Peugeot)	1	
69267A	Race, ZF4HP22 Output Shaft To Rear Drum (Front) (Lincoln)	1	1043330076
69268	Race, ZF4HP22 Output Shaft To Rear Drum (Bronze) (BMW, Peugeot)	1	
69268A	Race, ZF4HP22 Output Shaft To Rear Drum (Lincoln)	1	1043330077
69269	Race, ZF4HP22 Output Shaft To Rear Drum (Rear) (BMW, Peugeot)	1	
69269A	Race, ZF4HP22 Output Shaft To Rear Drum (Rear) (Lincoln)	1	1043330080
69270	Spacer, ZF4HP22 Output Shaft To Rear Drum (Rear)	1	1043314109
69271	Caged Bearing, ZF3HP22 Extension Housing	1	
69271A	Bearing, ZF4HP22 Extension Housing (2 Piece Split)	1	0635303058
69275	Washer, ZF3HP22 Under Yoke Nut	1	
69275A	Washer, ZF4HP22 Under Yoke Nut	1	0730749139

PART #	GASKETS & RUBBER COMPONENTS	QTY.	REFERENCE #
69300	Gasket, ZF3HP22 Bottom Pan (Rubber)	1	24-11-1-205-903
69300A	Gasket, ZF4HP22/ZF4HP24 Bottom Pan (Rubber)	1	24-11-1-215-488
69305	Gasket, ZF3HP22 Extension Housing	1	0301325002
69305A	Gasket, ZF4HP22 Extension Housing 1984-Up	1	070112012
69310	Gasket, ZF3HP22 Pump Stator To Bell Housing	1	1043322129
69310A	Gasket, ZF4HP22 Pump Stator To Bell Housing	1	0301301009
69310B	Gasket, ZF4HP22 Pump Stator To Case	1	750112012
69310C	Gasket, ZF3HP22 Pump Plate To Stator	1	750112009
69311	O-Ring, ZF3HP22 Pump	1	0634316308
69311A	O-Ring, ZF4HP22 Pump	1	734313061
69320A	Gasket, ZF4HP22 Valve Body (Upper)	1	1043326162
69320AA	Gasket, ZF4HP22 Valve Body (Upper)	1	1043326253
69320E	Gasket, ZF4HP24 Valve Body (Upper) Electronic	1	1043326232
69320EA	Gasket, ZF4HP24 Valve Body (Upper) Electronic	1	1043328050
69321E	Gasket, ZF4HP24 Valve Body (Lower) Electronic	1	
69330	O-Ring, ZF4HP22 Overdrive Clutch (Inner)	1	0734313028
69331	O-Ring, ZF4HP22 Overdrive Clutch (Outer)	1	0734313017
69332	O-Ring, ZF4HP22 Intermediate Clutch (Inner)	1	0734313027
69333	O-Ring, ZF4HP22 Intermediate Clutch (Outer)	1	0734313006
69335	O-Ring, ZF4HP22 Forward Clutch (Outer)	1	0301302061
69336	O-Ring, ZF4HP22 Direct Clutch (Inner)	1	0301302040
69337	O-Ring, ZF4HP22 Direct Clutch (Outer)	1	0734313008

© Whatever It Takes Transmission Parts. Inc.

69338	O-Ring, ZF4HP22 Low/Reverse Clutch (Inner)	1	0734313025
69338A	O-Ring, ZF4HP22 Reverse Clutch (Inner)	1	1043317001
69374	O-Ring, ZF4HP22 Output Shaft	1	0734313066
69379	O-Ring, ZF4HP22 Filter	1	0734313110
69380	O-Ring, ZF4HP22 Input Shaft	1	0734313065

PART #	TECHNICAL MANUALS	QTY.	REFERENCE #
69400	Technical Manual, ZF3HP22 1976-84	1	83-ZF3HP22TM
69400A	Technical Manual, ZF4HP22 1984-Up	1	83-ZF4HP22TM

PART #	ELECTRICAL COMPONENTS	QTY.	REFERENCE #
69421	Solenoid, ZF4HP22/ZF4HP24 (Shift/TCC/Reverse Lock-Out)(For A 5 Solenoid Valve Body Only)	1-3	501307869
69421K	Solenoid Master Kit, ZF4HP22/ZF4HP24 (For 5 Solenoid Valve Body Only)	1	MS-ZFHP22
69431	Solenoid, ZF4HP22 (EPC) Pressure Regulator Solenoid (Fits The 5 Solenoid Valve Body)	1	0501206997
69446	Wire Harness, ZF4HP24 Internal	1	1043227016

PART #	MISC. COMPONENTS	QTY.	REFERENCE #
69490	Breather Cap, ZF4HP22	1	1043325007

PART #	HARD PARTS	QTY.	REFERENCE #
69510	Pump Body W/Gears, ZF3HP22 1976-84	1	24-31-1-207-748
69510A	Pump Body W/Gears, ZF4HP22 (Bushing Type)	1	24-40-1-624-401
69510B	Pump Body W/Gears, ZF4HP22 (Roller Bearing Type)	1	
69520	Stator, ZF3HP22 1976-84	1	24-40-1-624-401
69520A	Stator, ZF4HP22 (Cast # 103) (.570"ID Cooler Line Fitting)	1	24-16-1-217-085
69520B	Stator, ZF4HP22 (Cast # 133) (.570"ID Cooler Line Fitting)	1	
69520C	Stator, ZF4HP22 (Cast # 158) (.570"ID Cooler Line Fitting)	1	
69520D	Stator, ZF4HP22 (Cast # 258) (.570"ID Cooler Line Fitting)	1	
69520E	Stator, ZF4HP22 (Cast # 206) (.655"ID Cooler Line Fitting)	1	
69520G	Stator, ZF4HP22 (Cast # 253) (.492"ID Cooler Line Fitting)	1	
69520H	Stator, ZF4HP22 (Cast # 255) (.492"ID Cooler Line Fitting)	1	1043222079
69520J	Stator, ZF4HP22 (Cast # 236) Bolt On Shaft 3 7/16" Long	1	
69529	Shaft, ZF4HP22 Stator Tube	1	
69550	Drum, ZF4HP22 Overdrive (3 Clutch) Hydraulic Units	1	24-23-1-217-090
69550A	Drum, ZF4HP22 Overdrive (4 Clutch) Hydraulic Units	1	1043280081
69550B	Drum, ZF4HP22 Overdrive (3 Clutch) Electronic Units	1	
69550C	Drum, ZF4HP22 Overdrive (4 Clutch) Electronic (With 4 Apply Holes On OD)	1	1043230084
69550CA	Drum, ZF4HP22 Overdrive (4 Clutch) Electronic (With 3 Apply Holes On OD) The Flat Machined Surface On Back Has 10 Threaded Bolt Holes (1.330"ID Of The Inside Bore At The Rear Of Drum)	1	1043230093
69550CAA	Drum, ZF5HP22 Overdrive (4 Clutch) Electronic (With 3 Apply Holes On OD) The Flat Machined Surface On Back Has 10 Threaded Bolt Holes (1.410"ID Of The Inside Bore At The Rear Of Drum)	1	
69550CB	Drum, ZF4HP22 Overdrive (4 Clutch) Electronic (With 3 Apply Holes On OD) The Flat Machined Surface On Back Has 10 Un-Threaded Bolt Holes	1	
69554	Drum, ZF3HP22 Forward Clutch (A Clutch)(1.125" Thick)	1	24-21-1-206-821
69554A	Drum, ZF4HP22 Forward Clutch (A Clutch)(1.125" Thick) (Cast # 1043 402 050)	1	24-23-1-215-420
69554B	Drum, ZF4HP24 Forward Clutch (A Clutch) (1.755" Thick) (Cast # 1043 402 077)	1	
69555	Drum, ZF3HP22 / ZF4HP22 Direct Clutch (3 Clutch)	1	
69555A	Drum, ZF3HP22 / ZF4HP22 Direct Clutch (4 Clutch)	1	
69555E	Drum, ZF4HP24 Direct Clutch (5 Clutch) (Cast # 1043 402 086)	1	
69557	Drum, ZF4HP22 Low/Reverse Clutch	1	24-23-1-215-389
69560	Piston Kit, ZF4HP22 Overdrive Clutch	1	
69562	Piston Kit, ZF3HP22 / ZF4HP22 Intermediate Clutch	1	
69564	Piston Kit, ZF3HP22 / ZF4HP22 Forward Clutch	1	
69564B	Piston Kit, ZF4HP24 Forward Clutch (Cast # 1043 402 095 Or 1043 402 129)	1	
69565	Piston Kit, ZF3HP22 / ZF4HP22 Direct Drum	1	
69566	Piston Kit, ZF3HP22 / ZF4HP22 Reverse Clutch	1	
69567	Piston Kit, ZF4HP22 Low/Reverse Clutch	1	
69569	Piston Kit, ZF3HP22 / ZF4HP22 Overrun Clutch	1	
69574	Clutch Hub, ZF3HP22 Forward Clutch (Washer Type)	1	
69574A	Clutch Hub, ZF4HP22 Forward Clutch (Bearing Type)	1	1043302049
69575	Clutch Hub, ZF3HP22 / ZF4HP22 Direct Clutch (1.734" Tall)	1	1043302110
69575E	Clutch Hub, ZF4HP24 Direct Clutch (2.380" Tall)	1	
69577	Clutch Hub, ZF4HP22 Low/Reverse Output (Aluminum) Cast # 1043-430-058	1	1043330144
69577A	Clutch Hub, ZF4HP22 Low/Reverse Output (Aluminum) Cast # 1043-430-144	1	

© Whatever It Takes Transmission Parts. Inc.

PART #	HARD PARTS (Continued)	QTY.	REFERENCE #
69580	Planet, ZF4HP22 Overdrive (Rear)	1	
69582K	Planet, ZF3HP22 / ZF4HP22 Front W/Sprag (3 Gear) Used With 35 Teeth Sun Gear W/Out Sealing Ring	1	23-41-0-924-241
69582AK	Planet, ZF3HP22 / ZF4HP22 Front W/Sprag (3 Gear) Used With 35 Teeth Sun Gear With 2 Sealing Rings	1	
69582BK	Planet, ZF3HP22 / ZF4HP22 Front With Sprag (4 Gear)	1	
69584A	Planet, ZF3HP22 / ZF4HP2 2nd (Used With 41 Teeth Sun Gear)	1	
69584B	Planet, ZF3HP22 / ZF4HP22 2nd (4 Gear) Used With 35 Teeth Sun Gear	1	
69584C	Planet, ZF3HP22 / ZF4HP22 2nd (3 Gear) Used With 35 Teeth Sun Gear	1	23-41-1-124-341
69590	Ring Gear, ZF4HP22 Overdrive Planet	1	1036332015
69592	Ring Gear, ZF3HP22 / ZF4HP22 Front Planet	1	24-41-1-024-241
69594	Ring Gear, ZF3HP22 / ZF4HP22 2nd Planet	1	
69600	Hub, ZF4HP22 Rear Ring Gear (Inner Sprag Race)	1	
69610	Sun Gear, ZF4HP22 Overdrive With Flange	1	
69612	Sun Gear, ZF3HP22 / ZF4HP22 (35 Teeth Without Sealing Rings)	1	
69612A	Sun Gear, ZF3HP22 / ZF4HP22 (35 Teeth With 2 Sealing rings)	1	
69612B	Sun Gear, ZF3HP22 / ZF4HP22 (41/35 Teeth With 2 Sealing Rings)	1	
69612C	Sun Gear, ZF3HP22 / ZF4HP22 (41/35 Teeth Without Sealing Rings)	1	
69620	Shell, ZF4HP22 Connecting With Shaft	1	
69630	Center Support Plate, ZF3HP22 / ZF4HP22 (Cast # 1043 431020)	1	
69630A	Center Support Plate, ZF3HP22 / ZF4HP22 (Cast # 1043 431030)	1	
69630B	Center Support Plate, ZF3HP22 / ZF4HP22 (Cast # 1043 431055)	1	1043231038
69632	Center Support, ZF3HP22 / ZF4HP22 (1 Snap Ring On Outside For Clutch Packs) (2.480” Tall)	1	1043217008
69632A	Center Support, ZF3HP22 / ZF4HP22 (1 Snap Ring On Outside & 1 Snap Ring On Inside)	1	
69632B	Center Support, ZF3HP22 / ZF4HP22 (1 Snap Ring On Outside For Clutch Packs) (2.650” Tall)	1	
69634	Support Ring, ZF4HP22	1	
69639	Lock Keys, ZF3HP22 / ZF4HP22 Center Support	3	

PART #	SPRAGS & ONE WAY CLUTCHES	QTY.	REFERENCE #
69642	Sprag Assembly, ZF3HP22 / ZF4HP22 2nd Freewheel (Non Turbo)	1	1043231006
69642A	Sprag Assembly, ZF3HP22 / ZF4HP22 2nd Freewheel (Turbo) Extra Wide	1	
69650	Sprag, ZF4HP22 Overdrive Roller Clutch	1	
69661	Outer Race, ZF4HP22 Overdirve Roller Clutch	1	

PART #	HARD PARTS (Continued)	QTY.	REFERENCE #
69670	Input Shaft, ZF3HP22	1	
69670A	Input Shaft, ZF4HP22	1	1043202048
69674	Shaft, ZF3HP22 Intermediate	1	
69674A	Shaft, ZF4HP22 Intermediate	1	
69678	Output Shaft, ZF3HP22 (10” Long)	1	
69678A	Output Shaft, ZF3HP22 (9” Long)	1	
69678B	Output Shaft, ZF4HP22 (8 1/4” Long)	1	1043214060
69678C	Output Shaft, ZF4HP22 (17 3/4” Long)	1	
69678D	Output Shaft, ZF4HP22 (9 3/16” Long)	1	1043214067
69678E	Output Shaft, ZF4HP22 (9 7/8” Long)	1	
69678G	Output Shaft, ZF4HP22 (13 1/4” Long)	1	
69680	Valve, ZF3HP22 For The Governor	1	
69680A	Valve, ZF4HP22 For The Governor (Two Valve Type)	1	
69680AA	Valve, ZF4HP22 For The Governor (One Valve Type)	1	
69682	Support, ZF3HP22 Governor Housing	1	1043333008
69682A	Support, ZF4HP22 Governor Housing (For 1 Valve Type)	1	E4LY-7C053-A
69682B	Support, ZF4HP22 Governor Housing (For 2 Valve Type)	1	1043333104
69685	Governor Flange, ZF3HP22	1	1043233005
69689	Governor Weights, ZF4HP22	1	
69690	Park Wheel, ZF4HP22 (Hydraulic) Governor Type	1	
69690A	Park Wheel, ZF4HP22 (Electronic) With 36 Lug Reluctor (The Reluctor Is Bolted To The Park Wheel In Place Of The Governor)	1	
69740	Valve Body, ZF3HP22	1	
69740A	Valve Body, ZF4HP22 (Hydraulic)	1	
69740AC	Valve Body, ZF4HP22 (Electronic) With 5 Solenoids (4 On 1 Side & 1 On The Other)	1	
69740B	Valve Body, ZF4HP22 (Electronic) With 5 Solenoids On One Side & 8 Wire Connectors	1	
69740BA	Valve Body, ZF4HP22 (Electronic) With 4 Solenoids (7 Wire Connector)	1	
69740BB	Valve Body, ZF4HP22 (Electronic) With 4 Solenoids (9 Wire Connector)	1	

© Whatever It Takes Transmission Parts. Inc.

PART #	VALVE BODY COMPONENTS	QTY.	REFERENCE #
69741-3K	Spring Kit, ZF4HP22 (In Valve Body) Hydraulic Units	1	
69741E-3K	Spring Kit, ZF4HP22 (In Valve Body) Electronic Units	1	
69741C-3	Spring, ZF4HP22 Converter Control (In Valve Body)	1	
69741-5	Check Ball, ZF4HP22 Valve Body	AR	1043323017
69741-8	Valve Body Plug, ZF4HP22 Small Rubber	6	0734317003
69741A-8	Valve Body Plug, ZF4HP22 Large Rubber	1	1043301514
69741-9	Tube, ZF4HP22 On Valve Body (J Shaped)	1	1043326229
69748K	Spring & Hocket Puck Kit, ZF3HP22	1	
69748AK	Spring & Hocket Puck Kit, ZF4HP23	1	
69748A-1	Snap Ring, ZF4HP22 Holds In Spring & Rubber Plug	7	0630502079
69748A-2	Spring, ZF4HP22 Between Valve Body & Small Rubber Plug	4	0732040687
69748A-2A	Spring, ZF4HP22 Between Valve Body & Large Rubber Plug	4	030132087

PART #	HARD PARTS (Continued)	QTY.	REFERENCE #
69750	Bell Housing, ZF3HP22 (Cast # 034)	1	
69750A	Bell Housing, ZF3HP22 (Cast # 019)	1	
69750B	Bell Housing, ZF3HP22 (Cast # 041)	1	
69750C	Bell Housing, ZF3HP22 (Cast # 084)	1	
69750D	Bell Housing, ZF4HP22 (Cast # 18/F4)	1	
69750E	Bell Housing, ZF4HP22 (Cast # 012)	1	
69750F	Bell Housing, ZF4HP22 (Cast # 102)	1	
69750G	Bell Housing, ZF4HP22 (Cast # 106)	1	
69760	Case, ZF3HP22	1	
69760A	Case, ZF4HP22 (Hydraulic)	1	
69760B	Case, ZF4HP22 (BMW, Peugeot)	1	
69765	Pan, ZF3HP22	1	
69765A	Pan, ZF4HP22 2WD	1	
69765B	Pan, ZF4HP22 4x4 (5 1/2” Deep In Center)(With Drain Plug)	1	
69770	Extension Housing, ZF3HP22 (Cast # 004)	1	
69770A	Extension Housing, ZF3HP22 (Cast # 009)	1	
69770B	Extension Housing, ZF3HP22 (Cast # 020)	1	
69770C	Extension Housing, ZF3HP22 (Cast # 008)	1	
69770H	Extension Housing, ZF4HP22 (Cast # 036)	1	
69774	Housing, ZF3HP22 Driven Speed-O Gear	1	
69774A	Housing, ZF4HP22 Driven Speed-O Gear	1	
69779K	Bolt Set, ZF4HP22 Pan To Case	1	
69782K	Bolt Set, ZF4HP22 Valve Body	1	
69790	Bolt, ZF4HP22 Holds Overdrive Drum To Case	10	
69790K	Bolt Set, ZF4HP22 Holds Overdrive Drum To Case	1	
69798	Nut, ZF3HP22 Yoke	1	0737006036
69798A	Nut, ZF4HP22 Yoke	1	0737006036
69841	Yoke, ZF3HP22	1	
69843	Retainer, ZF4HP22 Solenoid	1	1043326045
69848	Gear, ZF4HP22 Driven Speed-O	1	
69861	Snap Ring, ZF4HP22 Holds Overdrive Pressure Plate In Drum	1	
69866	Snap Ring, ZF4HP22 Holds Shell To Overdrive Planet	1	0730513194
69868	Snap Ring, ZF4HP22 Holds Overdrive Hub To Overdrive Ring Gear	1	0730513193
69871	Snap Ring, ZF4HP22 Output Shaft (Front)	1	0730513229
69873	Snap Ring, ZF3HP22 / ZF4HP22 Center Support (Front)	1	
69876	Snap Ring, ZF4HP22 Holds Direct Hub To Forward Drum	1	0730513352
69876A	Snap Ring, ZF3HP22 Holds Direct Hub To Forward Drum	1	0301302043
69877B	Snap Ring, ZF4HP24 Holds Forward Clutch Spring Retainer In	1	
69878	Snap Ring, ZF3HP22 / ZF4HP22 (2.0L) Holds Direct Pressure Plate In Drum	1	0730513138
69878A	Snap Ring, ZF3HP22 / ZF4HP22 (2.5L) Holds Direct Pressure Plate In Drum	1	0730513325
69879	Snap Ring, ZF3HP22 / ZF4HP22 Holds Direct Clutch Retainer In Drum	1	0301302053
69880	Snap Ring, ZF3HP22 / ZF4HP22 Holds Direct Drum To Sun Gear Shaft	1	0301302052
69882	Snap Ring, ZF3HP22 / ZF4HP22 Holds Front Ring Gear To Rear Planet	1	0730513272
69883	Snap Ring, ZF3HP22 / ZF4HP22 Holds Center Plate In Case	1	0730503057
69885	Snap Ring, ZF4HP22 Holds Low/Reverse Pressure Plate In Drum	1	0730513190
69886	Snap Ring, ZF3HP22 / ZF4HP22 Holds Front Planet Ring Gear To Shell	1	
69887	Snap Ring, ZF4HP22 Holds Park Gear To Output Shaft	1	
69889	Snap Ring, ZF3HP22 / ZF4HP22 Holds Rear Ring Gear To Intermediate Shaft	1	0301332015
69891	Snap Ring, ZF3HP22 / ZF4HP22 Holds Reverse Pressure Plate In Center Support	1	0301314012
69892	Snap Ring, ZF3HP22 / ZF4HP22 Center Support (Rear)	1	
69893	Retainer, ZF3HP22 / ZF4HP22 Holds Reverse Clutch Return Spring To Center Support (2 piece)	1	0630503036
69894	Snap Ring, ZF3HP22 / ZF4HP22 Park Gear To Output Shaft (Front)	1	

© Whatever It Takes Transmission Parts. Inc.

PART #	HARD PARTS (Continued)	QTY.	REFERENCE #
69960	Piston, ZF4HP22 Overdrive Clutch	1	
69962	Piston, ZF3HP22 / ZF4HP22 Center Plate	1	
69964	Piston, ZF3HP22 / ZF4HP22 Forward Clutch	1	1043202040
69964B	Piston, ZF4HP24 Forward Clutch (Cast # 1043 402 095 or 1043 402 129)	1	
69965	Piston, ZF4HP22 Direct Clutch	1	1043302093
69966	Piston, ZF3HP22 / ZF4HP22 Reverse Clutch	1	
69967	Piston, ZF4HP22 Low/Reverse Clutch	1	
69969	Piston, ZF3HP22 / ZF4HP22 Overrun Clutch	1	
69970	Spring, ZF4HP22 Overdrive Clutch Return	1	1043330049
69972	Spring, ZF3HP22 / ZF4HP22 Intermediate Clutch Return	1	
69974	Spring, ZF3HP22 / ZF4HP22 Forward Clutch Return	1	1043302007
69974B	Spring, ZF4HP24 Forward Clutch Return (12 Fingers)(3.540”OD)	1	
69975	Spring, ZF3HP22 / ZF4HP22 Diaphragm Spring Direct Clutch Return	1	0301302028
69976	Spring, ZF3HP22 / ZF4HP22 Diaphragm Spring Reverse Clutch Return	1	0301317003
69977	Spring, ZF4HP22 Low/Reverse Clutch Return	1	1043330079
69979	Spring, ZF3HP22 / ZF4HP22 Diaphragm Spring Overrun Clutch Return	1	0301331031
69980	Retainer, ZF4HP22 Holds Overdrive Clutch Return Spring To Drum (2 piece)	1	1043330166
69982	Retainer, ZF3HP22 / ZF4HP22 Holds Intermediate Clutch Return Spring to Centering Support Plate (2 Piece)	1	31436AAA000
69984B	Retainer, ZF4HP24 Forward Clutch Spring (1.950” Wide)(Sets On Top Of The Return Spring # 974)	1	
69985	Retainer, ZF3HP22 / ZF4HP22 Holds Direct Clutch Return Spring To Drum (2 piece)	1	0301302054
69987	Retainer, ZF4HP22 Holds Low/Reverse Clutch Return Spring To Drum (2 Piece)	1	
69989	Retainer, ZF3HP22 / ZF4HP22 Overrun Clutch Return Spring To Center Support (2 Piece)	1	1043330056
69991	Linkage Assembly, ZF3HP22 Internal	1	
69991A	Linkage Assembly, ZF4HP22 Internal	1	
69995	Park Pawl Assembly, ZF4HP22	1	

© Whatever It Takes Transmission Parts. Inc.

© Whatever It Takes Transmission Parts. Inc.

ZF4HP14 (Peugeot)

FWD 4 Speed

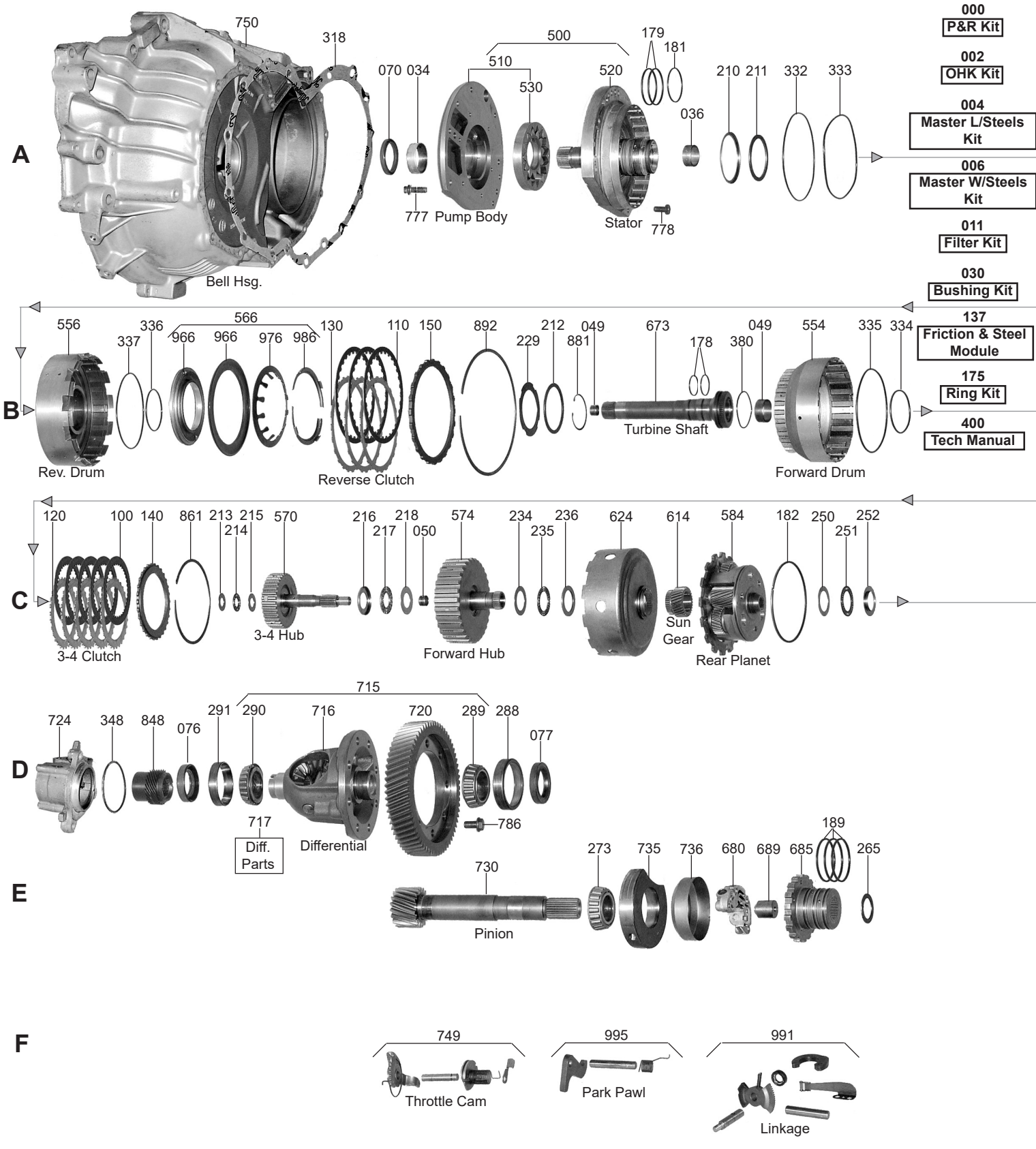

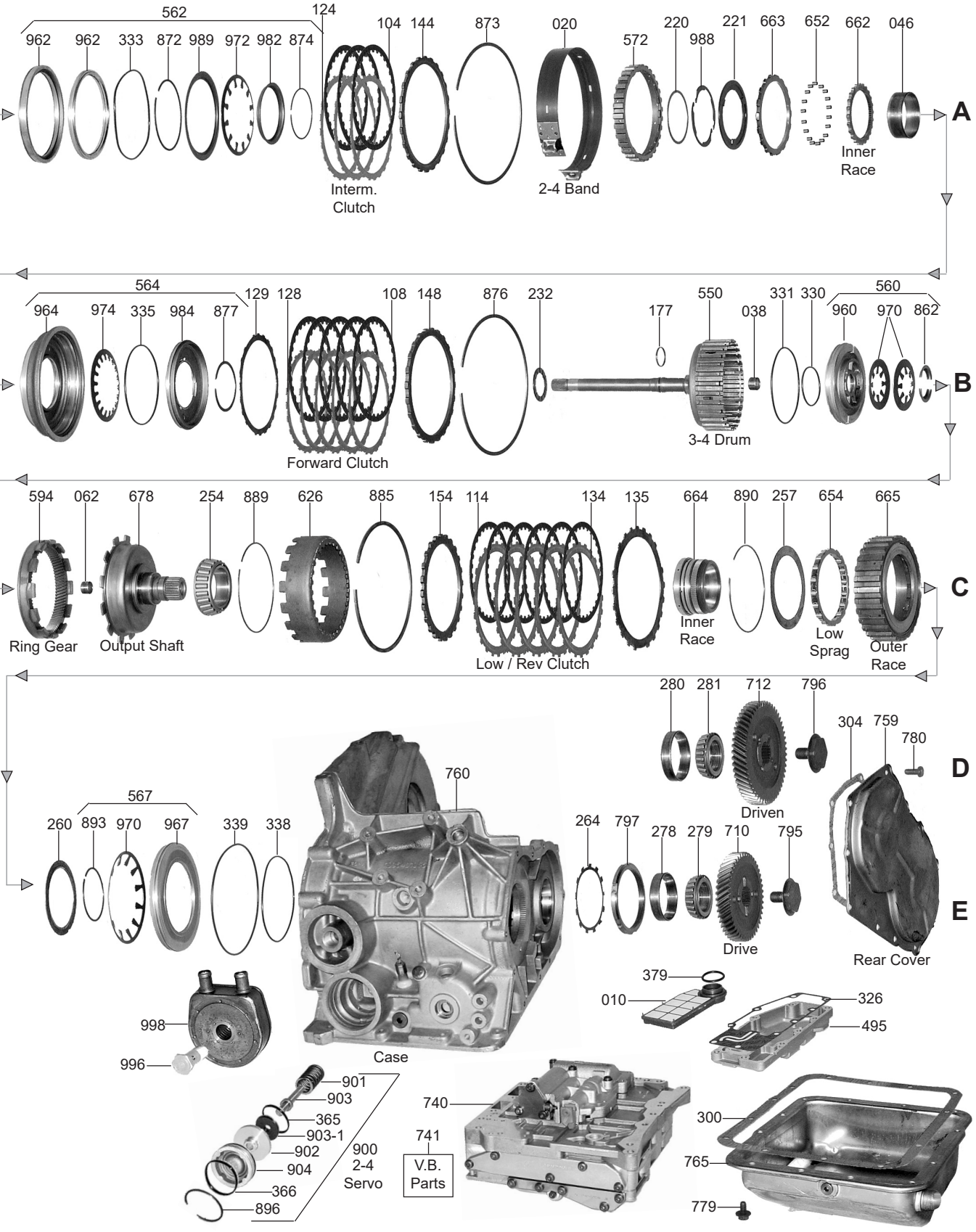

© Whatever It Takes Transmission Parts. Inc.

ZF4HP18 (Eagle / Dodge)

FWD 4 Speed

ZF

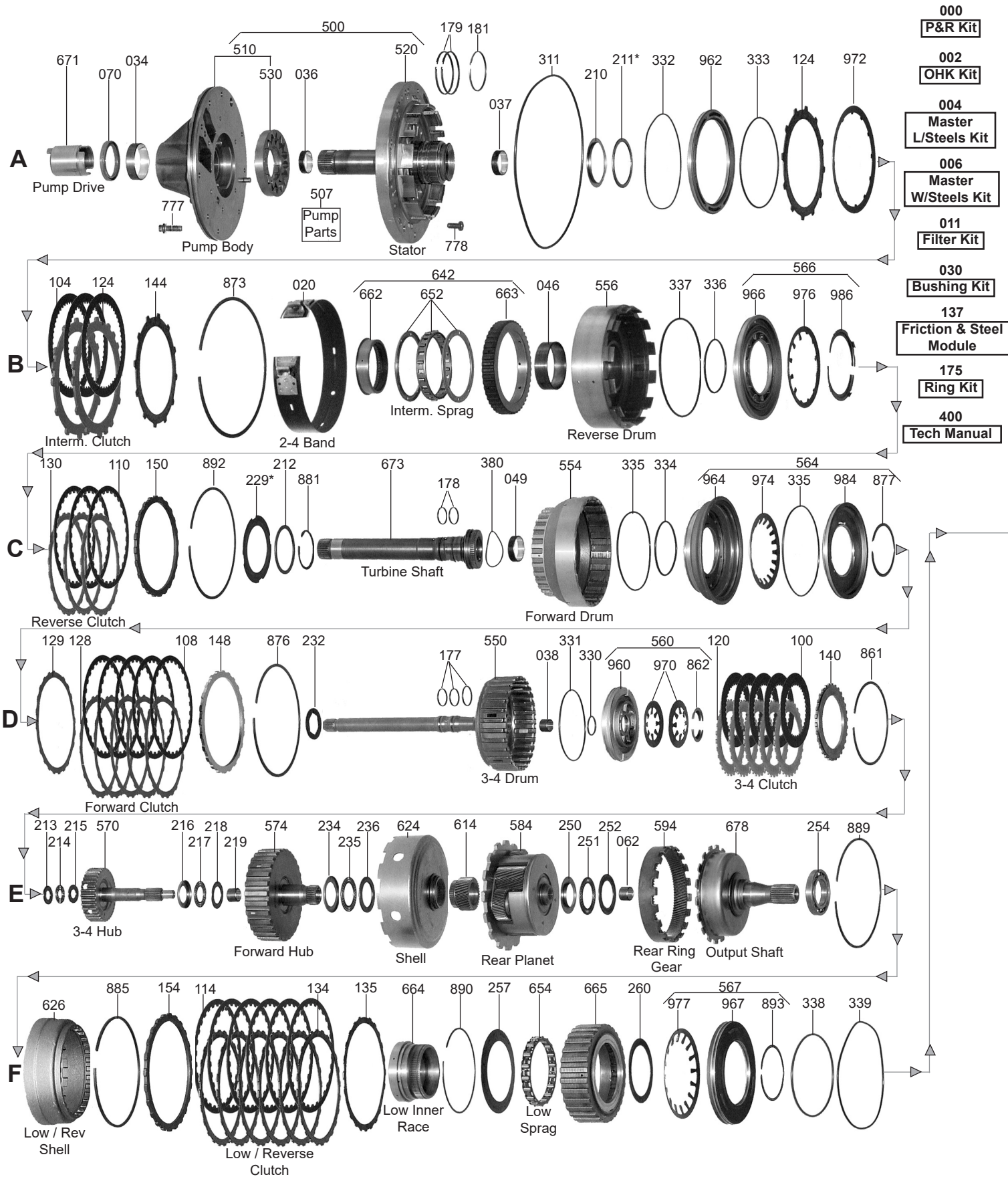

© Whatever It Takes Transmission Parts. Inc.

ZF4HP18 (Eagle / Dodge)

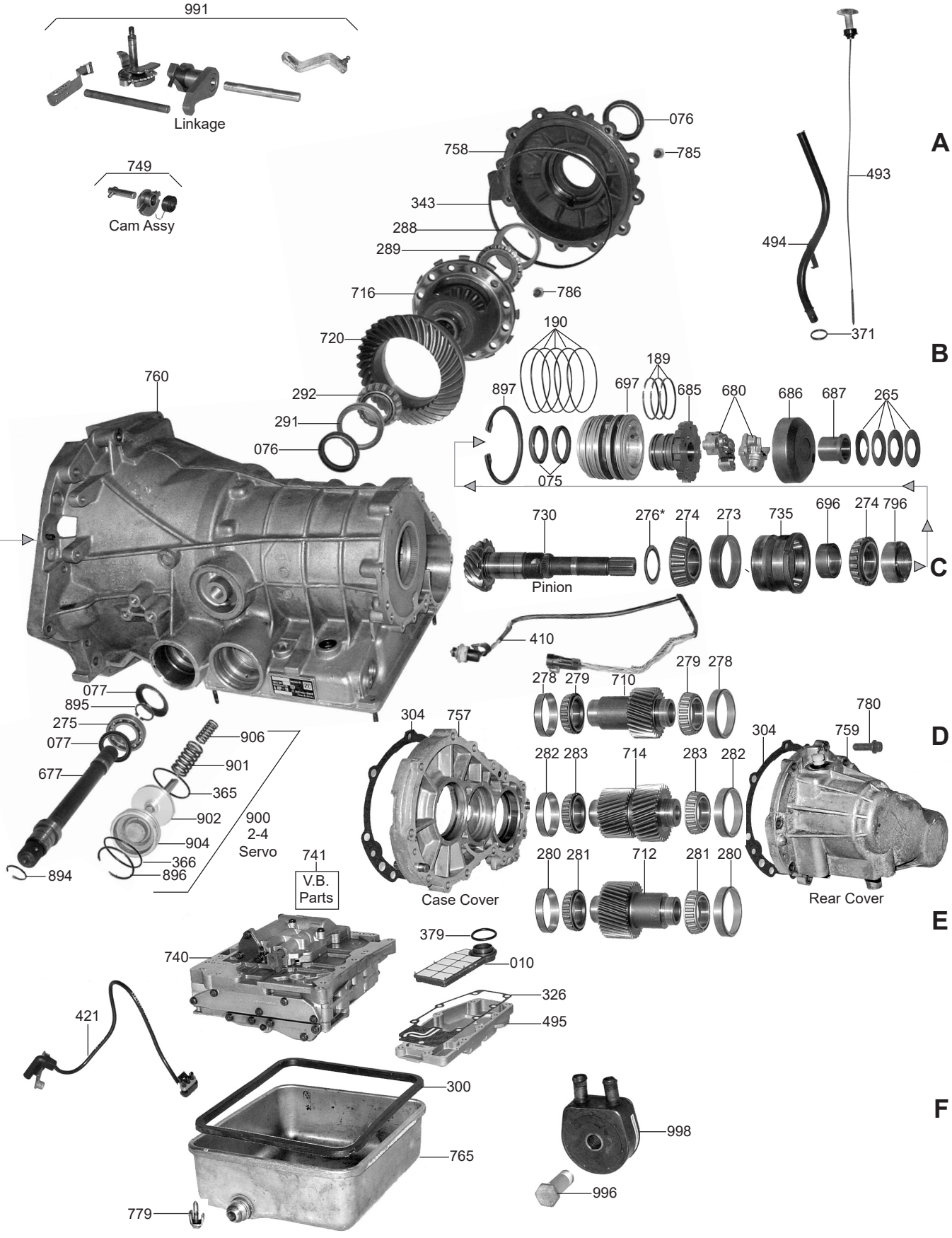

© Whatever It Takes Transmission Parts. Inc.

ZF4HP18 (Saab)

FWD 4 Speed

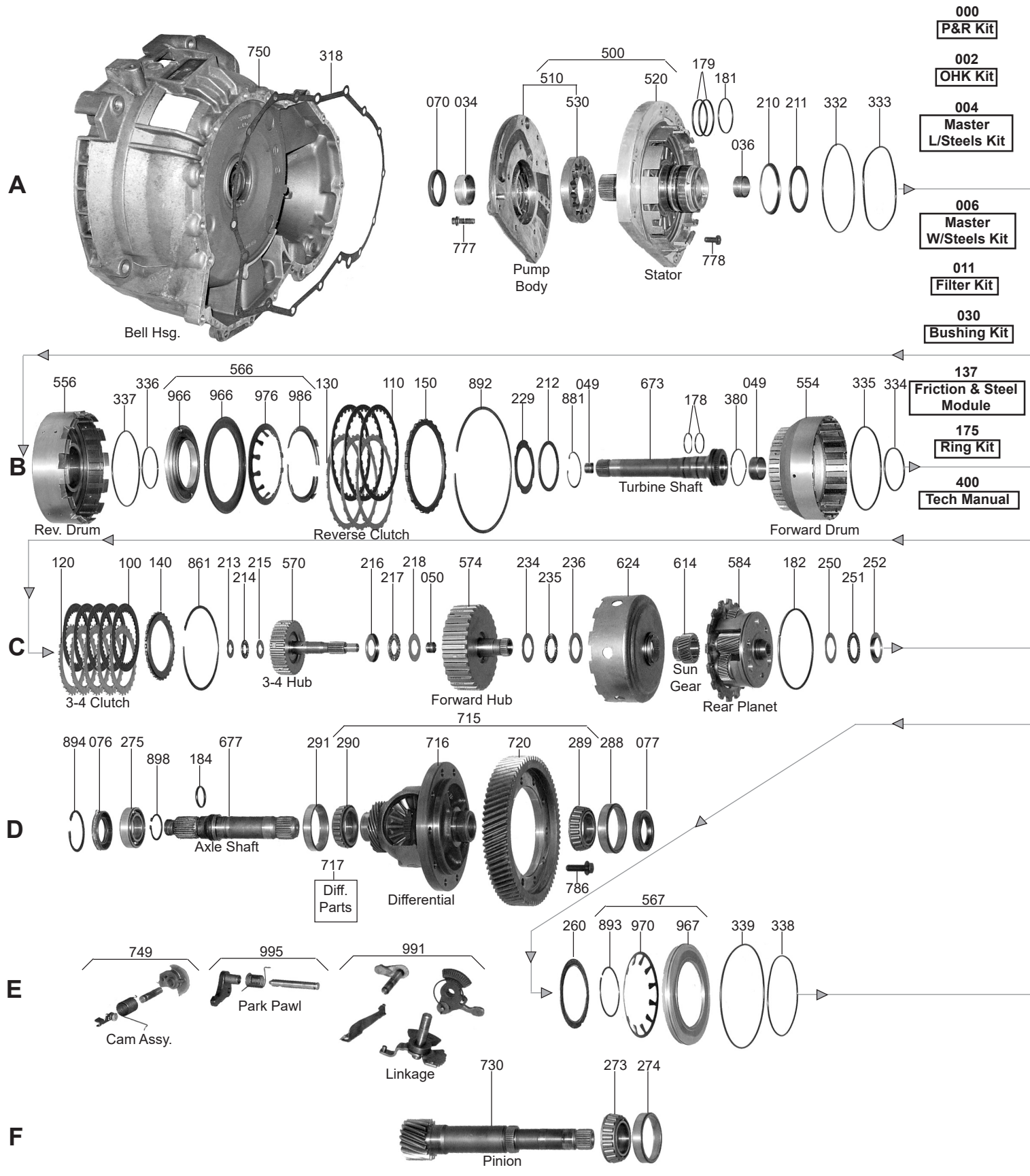

© Whatever It Takes Transmission Parts. Inc.

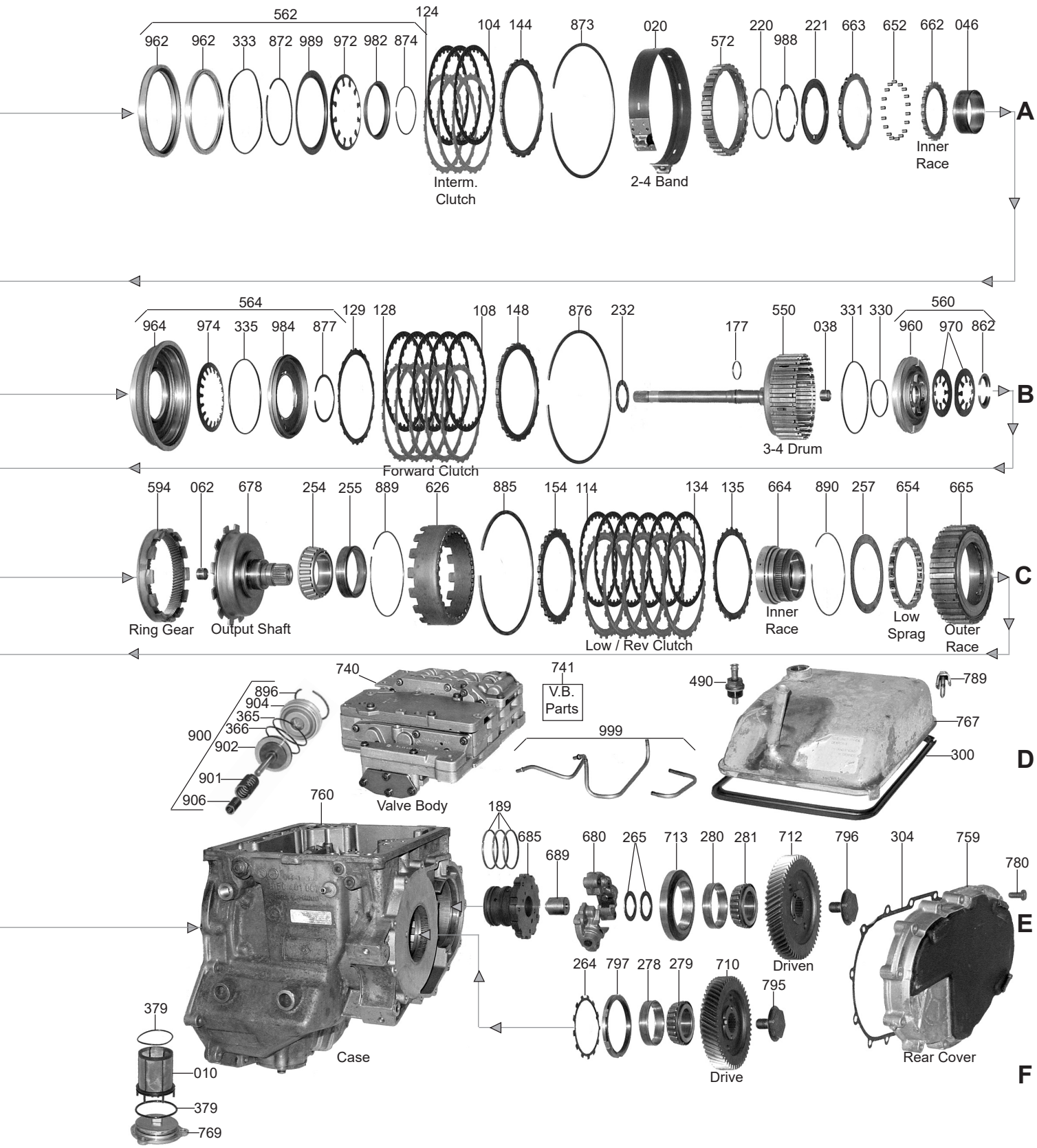

1-800-940-0197

© Whatever It Takes Transmission Parts. Inc.

PART #	PAPER & RUBBER KIT	QTY.	REFERENCE #
79000A	Paper & Rubber Kit, ZF4HP18 (Audi) 1989-99	1	
79000AA	Paper & Rubber Kit, ZF4HP18 (Audi 100) 4x4 1989-97	1	1050298023
79000B	Paper & Rubber Kit, ZF4HP18 (Alfa Romeo, Lancia) 1990-97	1	1050298010
79000C	Paper & Rubber Kit, ZF4HP18 (Citroen) 1986-96	1	1050298008
79000E	Paper & Rubber Kit, ZF4HP18 (Eagle, Dodge) 1986-96	1	1050298003
79000P	Paper & Rubber Kit, ZF4HP14 (Peugeot) 1989-94	1	1036298901
79000S	Paper & Rubber Kit, ZF4HP18 (Saab) 1986-94	1	1050298001

PART #	OVERHAUL KITS	QTY.	REFERENCE #
79002A	Overhaul Kit, ZF4HP18FLA (Audi)(With Transfer Case Parts) 1989-99	1	
79002AA	Overhaul Kit, ZF4HP18 (Audi 100) 4x4 1989-97	1	
79002B	Overhaul Kit, ZF4HP18 (Alfa Romeo, Lancia) 1990-97	1	1050298010
79002C	Overhaul Kit, ZF4HP18 (Citroen) 1989-96	1	
79002E	Overhaul Kit, ZF4HP18 (Eagle, Dodge) 1986-96	1	98027-ZF
79002P	Overhaul Kit, ZF4HP14 (Peugeot/Citroen/Daewoo/Austin Rover Only) 1989-94	1	1036298901
79002S	Overhaul Kit, ZF4HP18 (Saab 900 1994-97) (9000 1987-98) (Alfa Romeo & Lancia 1990-97) (Citroen XM 1989-98) (Peugot 605 1989-97)	1	1050298001

PART #	MASTER L/STEEL KIT	QTY.	REFERENCE #
79004A	Master L/Steels Kit, ZF4HP18FLA (Audi)(With Transfer Case Parts) 1989-99	1	
79004AA	Master L/Steels Kit, ZF4HP18 (Audi 100) 4x4 1989-97	1	
79004B	Master L/Steels Kit, ZF4HP18 (Alfa Romeo, Lancia) 1990-97	1	3418113
79004C	Master L/Steels Kit, ZF4HP18 (Citreon) 1986-96	1	3418114
79004E	Master L/Steels Kit, ZF4HP18 (Eagle, Dodge) 1986-96	1	3418111
79004P	Master L/Steels Kit, ZF4HP14 (Peugeot/Citroen/Daewoo/Austin Rover Only) 1989-94	1	98015-ZF
79004S	Master L/Steels Kit, ZF4HP18 (Saab 900 1994-97) (9000 1987-98) (Alfa Romeo & Lancia 1990-97) (Citroen XM 1989-98) (Peugot 605 1989-97)	1	3418112

PART #	MASTER W/STEEL KIT	QTY.	REFERENCE #
79006A	Master W/Steels Kit, ZF4HP18 (Audi) 1989-99	1	
79006AA	Master W/Steels Kit, ZF4HP18 (Audi 100) 4x4 1989-97	1	
79006B	Master W/Steels Kit, ZF4HP18 (Alfa Romeo, Lancia) 1990-97	1	2418113
79006C	Master W/Steels Kit, ZF4HP18 (Citroen) 1989-96	1	2418114
79006E	Master W/Steels Kit, ZF4HP18 (Eagle, Dodge) 1986-96	1	2418111
79006P	Master W/Steels Kit, ZF4HP14 (Peugeot/Citroen/Daewoo/Austin Rover Only) 1989-94	1	98001-ZF
79006S	Master W/Steels Kit, ZF4HP18 (Saab 900 1994-97) (9000 1987-98) (Alfa Romeo & Lancia 1990-97) (Citroen XM 1989-98) (Peugot 605 1989-97)	1	2418112

PART #	FILTER	QTY.	REFERENCE #
79010A	Filter, ZF4HP18 (Audi 100 & A6) 1991-Up	1	
79010E	Filter, ZF4HP14/ZF4HP18 (Rectangle Filter)	1	1036-226-013
79010S	Filter, ZF4HP14/ZF4HP18 (Round Filter)	1	501311497

PART #	FILTER KIT	QTY.	REFERENCE #
79011A	Filter, ZF4HP18 (Audi 100 & A6) 1991-Up	1	
79011E	Filter Kit, ZF4HP14/ZF4HP18 (Rectangle Filter)	1	
79011S	Filter Kit, ZF4HP14/ZF4HP18 (Round Filter)	1	

PART #	BANDS	QTY.	REFERENCE #
79020A	Band, ZF4HP18 (Audi)	1	
79020E	Band, ZF4HP18 (Eagle, Dodge)	1	
79020P	Band, ZF4HP14 (Peugeot)	1	
79020S	Band, ZF4HP18 (Saab)	1	

PART #	BUSHINGS	QTY.	REFERENCE #
79030E	Bushing Kit, ZF4HP18 (Eagle, Dodge)	1	
79030S	Bushing Kit, ZF4HP18 (Saab)	1	
79034A	Bushing, ZF4HP18 Pump Body (Audi)	1	
79034E	Bushing, ZF4HP18 Pump Body (Eagle, Dodge)	1	
79034S	Bushing, ZF4HP18 Pump Body (Saab)	1	
79036E	Bushing, ZF4HP18 Stator (Front) (Eagel, Dodge, Saab)	1	

© Whatever It Takes Transmission Parts. Inc.

79037E	Bushing, ZF4HP18 Stator (Rear) Eagle, Dodge, Saab (Use 69048)	1
79037EK	Bushing Kit, ZF4HP18 Stator & Turbine Shaft (Eagle, Dodge, Saab)	1
79037P	Bushing, ZF4HP14 Stator(Rear) Peugeot	1
79037PK	Bushing Kit, ZF4HP18 Stator & Turbine Shaft (Peugeot)	1
79046E	Bushing, ZF4HP18 Reverse Drum (Front) Eagle, Dodge, Saab	1
69048	Bushing, ZF4HP18 Stator (Rear) Eagle, Dodge, Saab	1
79049E	Bushing, ZF4HP18 Turbine Shaft (Eagle, Dodge, Saab)	1

METAL CLAD SEALS

PART #		QTY.	REFERENCE #
79070A	Seal, ZF4HP18 Front (Audi)	1	95321243
79070E	Seal, ZF4HP18 Front (Eagle, Dodge)	1	750-111-079
79070S	Seal, ZF4HP18 Front (Saab)	1	750-111-273
175072A	Seal, ZF4HP14/ZF4HP18 Manual Lever	1	
79075A	Seal, ZF4HP18 Pinion Shaft (Audi)	1	97409529A
79075E	Seal, ZF4HP18 Pinion Shaft (Eagle, Dodge)	2	750-111-191
79076A	Seal, ZF4HP18 Right Axle (Outer, Starter Side) Audi	1	97409399A
79076EA	Seal, ZF4HP18 Right Axle (Inner, Differential Side) Eagle, Dodge	1	750-111-193
79076EB	Seal, ZF4HP18 Right Axle (Outer, Differential Side) Eagle, Dodge	1	750-111-195
79076S	Seal, ZF4HP18 Right Axle (Rear) Saab	1	750-111-292
79077A	Seal, ZF4HP18 Left Axle (Outer, Differential Side) Audi	1	97409400D
79077EA	Seal, ZF4HP18 Left Axle (Inner, Starter Side) Eagle, Dodge	1	750-111-126
79077EB	Seal, ZF4HP18 Left Axle (Outer, Starter Side) Eagel, Dodge	1	750-111-181
79077P	Seal, ZF4HP14 Left Axle (peugeot)	1	501308397
79077S	Seal, ZF4HP18 Left Axle (Front) Saab	1	750-111-789

FRICTION CLUTCH

PART #		QTY.	REFERENCE #
79100E	Friction, ZF4HP18 3-4 Clutch (.063") 36 Teeth (4.25"OD) E Pack	5	1036-330-034
79100P	Friction, ZF4HP14 3-4 Clutch (.061") 36 Teeth (3.85"OD) E Pack	5	1050-230-033
69104	Friction, ZF4HP18 Intermediate Clutch (.063") 48 Teeth (5.628"OD) C Pack	3	1043217009
79104E	Friction, ZF4HP18 Intermediate Clutch (.063") 48 Teeth (5.628"OD) C Pack (Use 69104)	3	1050-210-053
79104P	Friction, ZF4HP14 Intermediate Clutch (C Pack)(.061") 30 Teeth (5.300"OD) 1989-94 (Also Fits ZF4HP14 Forward Clutch (A Pack) # 108)	4	1063-217-005
79108E	Friction, ZF4HP18 Forward Clutch (.063") 30 Teeth (5.778"OD) A Pack	5	1050-202-002
79108P	Friction, ZF4HP14 Forward Clutch (.061") 30 Teeth (5.300"OD) A Pack (Use 79104P)	3	1056-277-036
79110E	Friction, ZF4HP18 Reverse Clutch (.079") 30 Teeth (5.778"OD) B Pack	3	1050-202-004
79110P	Friction, ZF4HP14 Reverse Clutch (.077") 30 Teeth (5.300"OD) B Pack	3	1036-202-028
79114E	Friction, ZF4HP18 Low/Reverse Clutch (.063") 30 Teeth (5.778"OD) D Pack	6	1050-217-002
79114P	Friction, ZF4HP14 Low/Reverse Clutch (.061") 30 Teeth (5.300"OD) C Pack (Use 79104P)	5	1036-202-029

STEEL CLUTCH

PART #		QTY.	REFERENCE #
79120E	Steel, ZF4HP18 3-4 Clutch (.071") 30 Teeth (3.075"ID) E Pack	5	1050-330-017
79120P	Steel, ZF4HP14 3-4 Clutch (.071") 30 Teeth (2.950"ID) E Pack	5	1036-330-036
79124E	Steel, ZF4HP18 Intermediate Clutch (.071") 12 Teeth (4.688"ID) C Pack (Use 69126B)	3	24231-205-935
79124P	Steel, ZF4HP14 Intermediate Clutch (.071") 24 Teeth (4.730"ID) C Pack	4	1036-302-015
69126B	Steel, ZF4HP18 Intermediate Clutch (.071") 12 Teeth (4.688"ID) C Pack	3	24231-205-935
79128E	Steel, ZF4HP18 Forward (.071") 24 Teeth (5.200"ID) A Pack	5	1050-302-011
79128P	Steel, ZF4HP14 Forward Clutch (.071") 24 Teeth (4.730"ID) A Pack (Use 79124P)	4	1036-302-015
79129E	Steel, ZF4HP18 Forward Clutch (.040") 24 Teeth (5.200"ID) Waved (A Pack)	1	1050-302-012
79130E	Steel, ZF4HP18 Reverse Clutch (.071") 24 Teeth (5.200"ID) B Pack (Use 79128E)	3	1050-302-011
79130P	Steel, ZF4HP14 Reverse Clutch (.071") 24 Teeth (4.730"ID) B Pack (Use 79124P)	3	1036-302-015
79134E	Steel, ZF4HP18 Low/Reverse Clutch (.071") 24 Teeth (5.200"ID) D Pack (Use 79128E)	6	1050-302-011
79134P	Steel, ZF4HP14 Low/Reverse Clutch (.047") 24 Teeth (4.730"ID) D Pack	5	1036-317-006
79135E	Steel, ZF4HP18 Low/Reverse Clutch (.040") 24 Teeth (5.200"ID) D Pack (Use 79129E)	1	1050-302-012
79137E	Friction & Steel Module, ZF4HP18	1	
79137P	Friction & Steel Module, ZF4HP14	1	

CLUTCH PRESSURE PLATES

PART #		QTY.	REFERENCE #
79140E	Pressure Plate, ZF4HP18 3-4 Clutch (3.075"ID) 30 Teeth (E Pack)	1	1056271014
79140P	Pressure Plate, ZF4HP14 3-4 Clutch (2.950"ID) 30 Teeth (E Pack)	1	
79144E	Pressure Plate, ZF4HP18 Intermediate Clutch (4.688"ID) 12 Teeth (C Pack)	1	1043302092
79144P	Pressure Plate, ZF4HP14 Intermediate Clutch (4.730"ID) 24 Teeth (C Pack)	1	
79148E	Pressure Plate, ZF4HP18 Forward Clutch (5.200"ID) 24 Teeth (A Pack)	1	
79148P	Pressure Plate, ZF4HP14 Forward Clutch (4.730"ID) 24 Teeth (A Pack)	1	
79150E	Pressure Plate, ZF4HP18 Reverse Clutch (5.200"ID) 24 Teeth (B Pack)	1	1050302013
79150P	Pressure Plate, ZF4HP14 Reverse Clutch (4.730"ID) 24 Teeth (B Pack)	1	
79154E	Pressure Plate, ZF4HP18 Low/Reverse Clutch (5.200"ID) 24 Teeth (D Pack)	1	
79154P	Pressure Plate, ZF4HP14 Low/Reverse Clutch (4.730"ID) 24 Teeth (D Pack)	1	

© Whatever It Takes Transmission Parts. Inc.

PART #	OIL SEALING RINGS	QTY.	REFERENCE #
79175A	Ring Kit, ZF4HP18 (Audi)	1	
79175B	Ring Kit, ZF4HP18 (Alfa Romeo)	1	
79175E	Ring Kit, ZF4HP18 (Eagle, Dodge)	1	4HP18MPSR
79175P	Ring Kit, ZF4HP14 (Peugeot)	1	4HP14MPSR
79175S	Ring Kit, ZF4HP18 (Saab)	1	4HP14MPSR
79177E	Ring, ZF4HP14/ZF4HP18 Input Shaft To Turbine Shaft (Rear) 1.023"OD (Metal)	1	750-113-012
79177EBT	Ring, ZF4HP18 Input Shaft To Turbine Shaft (Front) .868"OD (Teflon)	2	501-309-030
79177PT	Ring, ZF4HP14 Input Shaft To Turbine Shaft (Front) .740"OD (Teflon)	1	501-309-031
79178E	Ring, ZF4HP18 Turbine Shaft To Stator (Rear) 1.260"OD (Metal)	1	750-113-014
79178P	Ring, ZF4HP14 Turbine Shaft To Stator (Rear) 1.145"OD (Metal)	1	
79178EB	Ring, ZF4HP18 Turbine Shaft To Stator (Front) 1.220"OD (Metal)	1	750-113-013
79178PB	Ring, ZF4HP14 Turbine Shaft To Stator (Front) 1.098"OD (Metal)	1	
79179E	Ring, ZF4HP18 Stator To Reverse Drum (2.285"OD) (Metal)	2	750-113-015
79179P	Ring, ZF4HP14 Stator To Reverse Drum (2.049"OD) (Metal) (Use 79181E)	2	750-113-024
79181E	Ring, ZF4HP18 Stator To Forward Drum (2.049"OD) (Metal) (Also Fits ZF4HP14 Stator To Reverse Drum)	1-3	750-113-024
79181P	Ring, ZF4HP14 Stator To Forward Drum (1.898"OD) (Metal)	1	750-113-005
79185P	Ring, ZF4HP14 Planet (Rear) 3.940"OD (Metal)	1	750-113-011
79189E	Ring, ZF4HP14/ZF4HP18 Governor (2.205"OD) (Metal)	2	750-113-027
79189EB	Ring, ZF4HP14/ZF4HP18 Governor (2.205"OD) (Rubber)	2	0501306310
79190E	Ring, ZF4HP18 Governor Support (Rear, Large) (Rubber)	4	734-313-075
79190EB	Ring, ZF4HP18 Governor Support (Front, Small) (Rubber)	1	734-313-052

PART #	WASHERS & BEARINGS	QTY.	REFERENCE #
79210E	Race, ZF4HP18 Stator To Band Drum (Eagle)	1	1050322004
79210S	Race, ZF4HP18 Stator To Band Drum (Saab)	1	
79211A	Washer, ZF4HP18 Stator To Band Drum (Plastic) Audi	1	
79211E	Washer, ZF4HP18 Stator To Band Drum (.045") Eagle	1	730105263
79211EA	Washer, ZF4HP18 Stator To Band Drum (.053") Eagle	1	730105264
79211EB	Washer, ZF4HP18 Stator To Band Drum (.054") Eagle	1	730105265
79211EC	Washer, ZF4HP18 Stator To Band Drum (.067") Eagle	1	730105266
79211ED	Washer, ZF4HP18 Stator To Band Drum (.075") Eagle	1	730105267
79211EE	Washer, ZF4HP18 Stator To Band Drum (.080") Eagle	1	730105268
79211EF	Washer, ZF4HP18 Stator To Band Drum (.091") Eagle	1	730105269
79211EG	Washer, ZF4HP18 Stator To Band Drum (.103") Eagle	1	730105270
79211EH	Washer, ZF4HP18 Stator To Band Drum (.108") Eagle	1	730105271
79211EJ	Washer, ZF4HP18 Stator To Band Drum (.118") Eagle	1	730105272
79211EL	Washer, ZF4HP18 Stator To Band Drum (.123") Eagle	1	730105273
79211EM	Washer, ZF4HP18 Stator To Band Drum (.133") Eagle	1	730105274
79211EN	Washer, ZF4HP18 Stator To Band Drum (.143") Eagle	1	730105275
79211EP	Washer, ZF4HP18 Stator To Band Drum (.152") Eagle	1	730105276
79211S	Washer, ZF4HP18 Stator To Band Drum (.047") Saab	1	730150608
79211SA	Washer, ZF4HP18 Stator To Band Drum (.049") Saab	1	730150609
79211SB	Washer, ZF4HP18 Stator To Band Drum (.062") Saab	1	730150610
79211SC	Washer, ZF4HP18 Stator To Band Drum (.070") Saab	1	730150611
79211SD	Washer, ZF4HP18 Stator To Band Drum (.082") Saab	1	730150612
79211SE	Washer, ZF4HP18 Stator To Band Drum (.088") Saab	1	730150613
79211SF	Washer, ZF4HP18 Stator To Band Drum (.097") Saab	1	730150614
79211SG	Washer, ZF4HP18 Stator To Band Drum (.105") Saab	1	730150615
79211SH	Washer, ZF4HP18 Stator To Band Drum (.113") Saab	1	730150616
79211SJ	Washer, ZF4HP18 Stator To Band Drum (.125") Saab	1	730150617
79211SL	Washer, ZF4HP18 Stator To Band Drum (.133") Saab	1	730150618
79211SM	Washer, ZF4HP18 Stator To Band Drum (.136") Saab	1	730150619
79211SN	Washer, ZF4HP18 Stator To Band Drum (.144") Saab	1	730150620
79211SP	Washer, ZF4HP18 Stator To Band Drum (.152") Saab	1	730150621
79212E	Washer, ZF4HP18 Stator To Turbine Shaft (Eagle)	1	
79213E	Race, ZF4HP18 3-4 Drum To 3-4 Hub (Front) Eagle	1	635290065
79213S	Race, ZF4HP18 3-4 Drum To 3-4 Hub (Front) Saab	1	
79214A	Bearing W/Race, ZF4HP18 3-4 Drum To 3-4 Hub (Audi)	1	
79214E	Bearing, ZF4HP18 3-4 Drum To 3-4 Hub (Eagle)	1	750115424
79214S	Bearing, ZF4HP18 3-4 Drum To 3-4 Hub (Saab)	1	
79215E	Race, ZF4HP18 3-4 Drum To 3-4 Hub (Rear) Eagle	1	
79216E	Race, ZF4HP18 3-4 Hub To Forward Hub (Front) Eagle	1	1050330032
79216S	Race, ZF4HP18 3-4 Hub To Forward Hub (Front) Saab	1	
79217A	Bearing, ZF4HP18 3-4 Hub To Forward Hub (Audi)	1	
79217E	Bearing, ZF4HP18 3-4 Hub To Forward Hub (Eagle)	1	635302030
79217S	Bearing, ZF4HP18 3-4 Hub To Forward Hub (Saab)	1	

© Whatever It Takes Transmission Parts. Inc.

79218E	Race, ZF4HP18 3-4 Hub To Forward Hub (Rear) Eagle	1	1050330033
79218S	Race, ZF4HP18 3-4 Hub To Forward Hub (Rear) Saab	1	
79219A	Caged Bearing, ZF4HP18 Forward Hub (Inner) Audi	1	
79220E	Washer, ZF4HP18 On Top Intermediate Sprag (Eagle)	1	
79221E	Washer, ZF4HP18 Under Intermediate Sprag (Eagle)	1	
79229A	Washer, ZF4HP18 Reverse Drum To Forward Drum (Plastic #4) Eagle & Audi	1	
79229E	Washer, ZF4HP18 Reverse Drum To Forward Drum (Plastic #3) Eagle & Audi	1	1050331009
79229S	Race, ZF4HP18 Reverse Drum To Forward Drum (Saab)	1	
79232A	Bearing W/Race, ZF4HP18 Forward Drum To 3-4 Drum (Audi)	1	
79232E	Washer, ZF4HP18 Forward Drum To 3-4 Drum (Black Plastic) Eagle	1	730150726
79234E	Race, ZF4HP18 3rd Clutch Hub To Bowl (Front) Eagle	1	1050302016
79234S	Race, ZF4HP18 Forward Clutch Hub To Bowl (Front) Saab	1	635290066
79235A	Bearing W/Race, ZF4HP18 Forward Clutch Hub To Bowl (Audi)	1	
79235E	Bearing, ZF4HP18 Forward Clutch Hub To Bowl (Eagle)	1	635302032
79235S	Bearing, ZF4HP18 Forward Clutch To Bowl (Saab)	1	
79236E	Race, ZF4HP18 Forward Clutch Hub To Bowl (Rear) Eagle	1	1050302015
79236S	Race, ZF4HP18 Forward Clutch Hub To bowl (Rear) Saab	1	
79244A	Bearing, ZF4HP18 Bowl To Rear Sun Gear (Audi)	1	
79245A	Race, ZF4HP18 Bowl To Rear Sun Gear (Audi)	1	
79246A	Race, ZF4HP18 Planet To Ring Gear (Front) Audi	1	
79247A	Bearing, ZF4HP18 Planet To Ring Gear (Audi)	1	
79248A	Race, ZF4HP18 Planet To Ring Gear (Rear) Audi	1	
79250A	Bearing W/Race, ZF4HP18 Ring Gear To bolt (Audi)	1	
79250E	Race, ZF4HP18 Output Shaft Hub (Front) Eagle	1	1050332013
79250S	Race, ZF4HP18 Output Shaft Hub (Front) Saab	1	
79251E	Bearing, ZF4HP18 Output Shaft Hub (Front) Eagle	1	750115210
79251S	Bearing, ZF4HP18 Output Shaft Hub (Front) Saab	1	
79252E	Race, ZF4HP18 Output Shaft Hub (Front) Eagle	1	
79252S	Race, ZF4HP18 Output Shaft Hub (Front) Saab	1	
79254E	Ball Bearing, Zf4HP18 Output Shaft (Eagle)	1	
79257E	Washer, ZF4HP18 Stop Ring (Eagle)	1	1050317010
79260E	Washer, ZF4HP18 Fixing (Eagle)	1	1050317024
79260S	Race, ZF4HP18 Rear Hub To Case (Saab)	1	
79263A	Cone Bearing, ZF4HP18 Case To Nut (Audi)	1	
79264S	Retaining Ring, ZF4HP18 Rear Sprag In Race To Lock Nut (Saab)	1	1036317037
79265E	Spring Washer, ZF4HP18 (Eagle)	1	
79271A	Cone Bearing, ZF4HP18 Rear Cover To Nut (Audi)	1	
79274E	Cone Bearing, ZF4HP18 Pinion Shaft (Eagle)	1	750117525
79275E	Ball Bearing, ZF4HP18 Axle Shaft To Case (Eagle)	1	635331218
79276E	Shim, ZF4HP18 Pinion Shaft (Selective) Eagle	1	
79276S	Race, ZF4HP18 For Pinion Bearing (Saab)	1	
79279A	Spacer, ZF4HP18 Tapered Bearing To Drive Gear (Audi)	1	
79279E	Cone Bearing, ZF4HP18 Transfer Gear (Eagle)	6	
79289E	Cone Bearing, ZF4HP18 Differential Houisng To Differential Cover (Eagle)	1	750117250
79291S	Cup Race, ZF4HP18 Differential To Case (Saab)	1	

PART #	GASKETS & RUBBER COMPONENTS	QTY.	REFERENCE #
79300A	Gasket, ZF4HP18 Bottom Pan (Rubber) Audi	1	
79300E	Gasket, ZF4HP18 Bottom Pan (Rubber) Eagle, Saab	1	1050301036
79300P	Gasket, ZF4HP14 Bottom Pan (Cork) Peugeot	1	1036301182
79304E	Gasket, ZF4HP18 End Cover (Eagle)	1	750112065
79304S	Gasket, ZF4HP18 End Cover (Saab)	1	0750-112-156
79311E	O-Ring, ZF4HP18 Pump (Eagle)	1	734313064
79318P	Gasket, ZF4HP14 Converter Housing To Main Case (Peugeot)	1	750112022
79318S	Gasket, ZF4HP18 Converter Housing To Main Case (Saab)	1	0750-112-067
79320EK	Gasket Set, ZF4HP18 Valve Body (Eagle)	1	
79322E	O-Ring, ZF4HP18 Goes Inside Valve Body (Eagle)	1	634313430
79322EA	Gasket, ZF4HP18 Valve Body End Plate (5 Bolt Holes) Eagle	1	1036326062
79322S	Gasket, ZF4HP18 Valve Body End Plate (13 Bolt Holes) Saab	1	750112166
79326E	Gasket, ZF4HP18 Valve Body To Filter (Eagle)	1	734313074
79326S	Gasket, ZF4HP18 Valve Body To Filter (Saab)	1	1050326112
79334E	O-Ring, ZF4HP18 Forward Drum (Inner) Eagel, Saab	1	734313020
79335E	O-Ring, ZF4HP18 Forward Drum (Outer) Eagel, Saab	1	750112045
79336E	O-Ring, ZF4HP18 Servo Cover (Eagle)	1	734313011
79367E	O-Ring, ZF4HP18 Servo Piston (Eagle)	1	734313030
79369P	O-Ring, ZF4HP14 Speed-O Housing To Bell Housing (Peugeot)	1	
79373E	O-Ring, ZF4HP18 Accelerator Cable (Eagle, Saab)	1	734303040
79374E	O-Ring, ZF4HP18 Axle Shaft (Right) Eagle	1	734313063

© Whatever It Takes Transmission Parts. Inc.

PART #	GASKETS & RUBBER COMPONENTS (Continued)	QTY.	REFERENCE #
79378E	Lathe Cut Seal, ZF4HP18 Cooler To Case (Small) Eagle	1	501310764
79378EA	Lathe Cut Seal, ZF4HP18 Cooler To Case (Large) Eagle	1	501310763
79379S	Gasket, ZF4HP18 Valve Body To Filter	1	
79380E	O-Ring, ZF4HP18 Turbine Shaft (Eagle)	1	734313068
79399S	O-Ring, ZF4HP18 Bearing Cover (Saab)	1	734313057

PART #	TECHNICAL MANUALS	QTY.	REFERENCE #
79400A	Technical Manual, ZF4HP18 Audi & Porsche Technician Diagnostic	1	
79400E	Technical Manual, ZF4HP18 Eagle	1	83-ZF4HP18TM
79400S	Technical Manual, ZF4HP18 Saab (Supplement)	1	

PART #	ELECTRICAL COMPONENTS	QTY.	REFERENCE #
79410E	Switch, ZF4HP18 Neutral Safety Switch (Eagle)	1	

PART #	HARD PARTS	QTY.	REFERENCE #
79510A	Pump Body W/Gears, ZF4HP18 (Audi)	1	
79510E	Pump Body W/Gears, ZF4HP18 (Eagle)	1	1050119003
79510P	Pump Body W/Gears, ZF4HP14 (Peugeot)	1	1036219017
79510S	Pump Body W/Gears, ZF4HP18 (Saab)	1	1050219022
79520A	Stator, ZF4HP18 (Pump Cover) Audi	1	
79520E	Stator, ZF4HP18 (Pump Cover) Eagle	1	835005279
79520P	Stator, ZF4HP14 (Pump Cover) Peugeot	1	1036222040
79520S	Stator, ZF4HP18 (Pump Cover) Cast # 1050 422 092 (Saab)	1	1050222051
79520SA	Stator, ZF4HP18 (Pump Cover) Cast # 1050 422 015 (Saab)	1	

PART #	PUMP PARTS	QTY	REFERENCE #
79507S-1	Valve, ZF4HP18 Cooler Relief (In Pump) Saab	1	1036322033
79530E	Pump Gears, ZF4HP18 (Outer) Eagle	1	1050319028
79530EA	Pump Gears, ZF4HP18 (Inner) Eagle	1	1050319029

PART #	HARD PARTS (Continued)	QTY	REFERENCE #
79550A	Drum, ZF4HP18 3-4 Clutch With Input Shaft (Audi)	1	
79550E	Drum, ZF4HP18 3-4 Clutch With Input Shaft (Eagle)	1	
79550S	Drum, ZF4HP18 3-4 Clutch With Input Shaft (Saab)	1	
79554A	Drum, ZF4HP18 Forward Clutch With Turbine Shaft (Audi)	1	
79554E	Drum, ZF4HP18 Forward Clutch (Eagle)	1	
79554P	Drum, ZF4HP14 Forward Clutch (Peugeot)	1	1036302062
79554S	Drum, ZF4HP18 Forward Clutch With Piston (Saab)	1	
79556A	Drum, ZF4HP18 Reverse Clutch (Front) Band Drum (Audi)	1	1050231047
79556E	Drum, ZF4HP18 Reverse Clutch (Front) Band Drum (Eagle)	1	
79556P	Drum, ZF4HP14 Reverse Clutch (Front) Band Drum (Peugeot)	1	1036231037
79556S	Drum, ZF4HP18 Reverse Clutch (Front) Band Drum (Saab)	1	
79560A	Piston Kit, ZF4HP18 3-4 Clutch (Audi)	1	
79560E	Piston Kit, ZF4HP18 3-4 Clutch (Eagle)	1	
79560S	Piston Kit, ZF4HP18 3-4 Clutch (Saab)	1	
79564A	Piston Kit, ZF4HP18 Forward Clutch (Audi)	1	
79564E	Piston Kit, ZF4HP18 Forward Clutch (Eagle)	1	1050302023
79564S	Piston Kit, ZF4HP18 Forward Clutch (Saab)	1	
79566A	Piston Kit, ZF4HP18 Reverse Clutch (Audi)	1	1050231047
79566E	Piston Kit, ZF4HP18 Reverse Clutch (Eagle)	1	
79566S	Piston Kit, ZF4HP18 Reverse Clutch (Saab)	1	
79567A	Piston Kit, ZF4HP18 Low/Reverse Clutch (Audi)	1	
79567E	Piston Kit, ZF4HP18 Low/Reverse Clutch (Eagle)	1	
79567S	Piston Kit, ZF4HP18 Low/Reverse Clutch (Saab)	1	
79570A	Clutch Hub, ZF4HP18 With Shaft 3-4 Clutch (Audi)	1	
79570E	Clutch Hub, ZF4HP18 With Shaft 3-4 Clutch (Eagle)	1	
79570S	Clutch Hub, ZF4HP18 With Shaft 3-4 Clutch (Saab)	1	
79574A	Clutch Hub, ZF4HP18 With Shaft Forward Clutch (Audi)	1	
79574E	Clutch Hub, ZF4HP18 With Shaft Forward Clutch (Eagle)	1	
79574S	Clutch Hub, ZF4HP18 With Shaft Forward Clutch (Saab)	1	
79575A	Clutch Hub, ZF4HP18 Low/Reverse Clutch (Audi)	1	

© Whatever It Takes Transmission Parts. Inc.

79584A	Planet, ZF4HP18 (Audi)	1	
79584E	Planet, ZF4HP18 (Eagle)	1	
79584P	Planet, ZF4HP14 (Peugeot)	1	
79584S	Planet, ZF4HP18 (Saab)	1	
79594A	Ring Gear, ZF4HP18 Planet With 75 Teeth Transfer Drive Gear (Audi)	1	
79594E	Ring Gear, ZF4HP18 Planet (Eagle)	1	
79594S	Ring Gear, ZF4HP18 Planet (Saab)	1	
79614A	Sun Gear, ZF4HP18 (21 Teeth) (Audi)	1	
79614E	Sun Gear, Zf4HP18 (Eagle)	1	
79614P	Sun Gear, ZF4HP14 (Peugeot)	1	1036332061
79614S	Sun Gear, ZF4HP18 (Saab)	1	
79624A	Shell, ZF4HP18 Sun Shell With Front Sun Gear (27 Teeth) (Audi)	1	
79624E	Bowl, ZF4HP18 Sun Shell (Eagle)	1	
79624S	Shell, ZF4HP18 Sun Shell (Saab)	1	1050231022
79626E	Shell, ZF4HP18 Rear (Aluminum) (Eagle)	1	
79626S	Shell, ZF4HP18 Rear (Aluminum) (Saab)	1	
79630A	Center Support, ZF4HP18 With Sprag (Audi)	1	
79631A	Center Support Molded Piston, ZF4HP18 (Audi)	1	

PART #	SPRAGS & ONE WAY CLUTCHES	QTY.	REFERENCE #
79642E	Sprag Assembly, ZF4HP18 Intermediate With Races (Eagle)	1	1050231026
79642S	Sprag Assembly, ZF4HP18 Intermediate With Races (Saab)	1	1050231023
79652E	Sprag, ZF4HP18 Intermediate (Eagle)	1	
79654E	Sprag, ZF4HP18 Rear (Eagle)	1	501207061
79654P	Sprag, ZF4HP14 Rear (Peugeot)	1	501207060
79654S	Sprag, ZF4HP18 Rear (Saab)	1	
79662E	Inner Race, ZF4HP18 Intermediate Sprag (Eagle)	1	
79663E	Outer Race, ZF4HP18 Intermediate Sprag (Eagle)	1	
79664E	Inner Race, ZF4HP18 Rear Sprag (Eagle)	1	1050317057
79664P	Inner Race, ZF4HP14 Rear Sprag (Peugeot)	1	1036317024
79664S	Inner Race, ZF4HP18 Rear Sprag (Saab)	1	1050317036
79665E	Outer Race, ZF4HP18 Rear Sprag (Eagle)	1	
79665P	Outer Race, ZF4HP14 Rear Sprag (Peugeot)	1	1036217003
79665S	Outer Race, ZF4HP18 Rear Sprag (Saab)	1	

PART #	HARD PARTS (Continued)	QTY.	REFERENCE #
79671E	Pump Drive Sleeve, ZF4HP18 (Eagle)	1	
79673E	Turbine Shaft, ZF4HP18 (Eagle)	1	1050202006
79673S	Turbine Shaft, ZF4HP18 (Saab)	1	1050202005
79677A	Shaft, ZF4HP18 Differential Drive (Audi)	1	
79677E	Shaft, ZF4HP18 Differential Drive (Eagle)	1	
79677S	Shaft W/Bearing, ZF4HP18 Differential Drive (Saab)	1	
79678E	Output Shaft, ZF4HP18 With Hub (Eagle)	1	1050214003
79678S	Output Shaft, ZF4HP18 With Hub (Saab)	1	1050214006
79680E	Governor, ZF4HP18 With Support (Eagle)	1	
79680S	Governor, ZF4HP18 With Support (Saab)	1	1050333180
79685E	Support, ZF4HP18 Governor (Cast Iron) (Eagle)	1	
79686E	Cover, ZF4HP18 Governor (Eagle)	1	
79687E	Collar, ZF4HP18 Spacer Above Governor (Eagle)	1	
79697E	Support Housing, ZF4HP18 Governor (Aluminum) (Eagle)	1	
79710A	Gear, ZF4HP18 Drive Transfer (85 Teeth) (Audi)	1	
79710E	Gear, ZF4HP18 Drive Transfer (36 Teeth) (Eagle)	1	
79710S	Gear, ZF4HP18 Drive Transfer (59 Teeth) (Saab)	1	
79712E	Gear, ZF4HP18 Driven Transfer (27 Teeth) (Eagle)	1	
79712S	Gear, ZF4HP18 Driven Transfer (53 Teeth) (Saab)	1	
79714E	Idler Gear, ZF4HP18 Transfer (31 Teeth Top & Bottom) (Eagle)	1	
79716A	Differential Housing, ZF4HP18 Less Ring Gear (Audi)	1	
79716E	Differential Housing, ZF4HP18 Less Ring Gear (Eagle)	1	
79716S	Differential Housing, ZF4HP18 Less Ring Gear (Saab)	1	
79720A	Ring Gear, ZF4HP18 Differential (31 Teeth) Audi	1	
79720E	Ring Gear, ZF4HP18 Differential (35 Teeth) Eagle	1	
79720S	Ring Gear, ZF4HP18 Differential (77 Teeth) Saab	1	
79724A	Cover, ZF4HP18 Differential (Audi)	1	
79724E	Cover, ZF4HP18 Differential (Eagle)	1	
79730A	Pinion, ZF4HP18 (9 Teeth) Audi	1	
79730EK	Ring & Pinion Set, ZF4HP18 (Eagle)	1	
79730S	Pinion, ZF4HP18 (18 Teeth) Saab	1	
79735E	Retainer, ZF4HP18 Pinion (Eagle)	1	

© Whatever It Takes Transmission Parts. Inc.

PART #	HARD PARTS (Continued)	QTY.	REFERENCE #
79740AA	Valve Body, ZF4HP18 (Cast #) Audi	1	
79740AB	Valve Body, ZF4HP18 (Audi) 4 Solenoids (Cast # 1050 427)	1	
79740AC	Valve Body, ZF4HP18 (Audi) No Solenoids (Cast # 1050 426)	1	
79740E	Valve Body, ZF4HP18 (Cast #) 4 1/4" Long Manual Shaft Valve (Eagle)	1	4549231
79740S	Valve Body, ZF4HP18 (Cast #) (Saab)	1	

PART #	VALVE BODY COMPONENTS	QTY.	REFERENCE #
S79741P-1	Valve, ZF4HP14/ZF4HP18 Pressure Regulator (Oversize) (Sonnax) Requires Tool # T-85991-TL)	1	
T-85991-TL	Reamer & Jig, ZF4HP14/ZF4HP18 For S79741P-1 (Sonnax)	1	
79749E	Cam Assembly, ZF4HP18 Throttle (Eagle)	1	

PART #	HARD PARTS (Continued)	QTY.	REFERENCE #
79750S	Bell Housing, ZF4HP18 (Saab)	1	
79757E	Flange Adapter, ZF4HP18 (For Rear Cover) Eagle	1	
79758E	Cover, Zf4HP18 Differential (Eagle)	1	
79759A	Rear Cover, ZF4HP18 (6 Bolt) Audi	1	
79759E	Rear Cover, ZF4HP18 (Eagle)	1	
79759S	Rear Cover, ZF4HP18 (Saab)	1	
79760A	Case, ZF4HP18 (Cast #) Audi	1	
79760E	Case, ZF4HP18 With Pinion Shaft (Eagle)	1	
79760S	Case, ZF4HP18 (Cast #) Saab	1	
79765A	Pan, ZF4HP18 Bottom (Audi)	1	
79765E	Pan, ZF4HP18 Bottom (Eagle)	1	
79767S	Pan, ZF4HP18 Top (Saab)	1	
79776S	Bolt Set, ZF4HP18 Bell To Case (Saab)	1	
79777EK	Bolt Set, ZF4HP18 Pump To Case (Eagle)	1	736101130
79778EK	Bolt Set, ZF4HP18 Pump Body To Stator (Eagle)	1	736401051
79779EK	Bolt Set, ZF4HP18 Pan To Case (Eagle)	1	
79786EK	Bolt Set, ZF4HP18 Differential Houisng To Ring Gear (Eagle)	1	
79794EK	Bolt Set, ZF4HP18 Differential Retainer To Case (Eagle)	1	
79796E	Nut, ZF4HP18 Pinion (Eagle)	1	
79797S	Slotted Nut, ZF4HP18 Rear Sprag Race (Saab)	1	1036317038
79861E	Snap Ring, ZF4HP18 Holds 3-4 Pressure Plate In Drum (Eagle)	1	730513288
79862E	Retainer, ZF4HP18 3-4 Clutch Return Spring (Eagle)	1	1056371009
79873E	Snap Ring, ZF4HP18 Holds Intermediate Pressure Plate To Stator (Eagle)	1	
79876E	Snap Ring, ZF4HP18 Holds Forward Clutch Pressure Plate In Drum (Eagle)	1	
79877E	Snap Ring, ZF4HP18 Holds Forward Clutch Retainer In	1	730513289
79881E	Snap Ring, ZF4HP18 Holds Turbine Shaft In Forward Drum (Eagle)	1	630532044
79885E	Snap Ring, ZF4HP18 Holds Low/Reverse Clutch In Case (Eagle)	1	
79889E	Snap Ring, ZF4HP18 Holds Ring Gear To Output Shaft (Eagle)	1	730513330
79890E	Snap Ring, ZF4HP18 Holds Rear Sprag In Outer Race (Eagle)	1	730513463
79892E	Snap Ring, ZF4HP18 Holds Reverse Pressure Plate In Drum (Eagle)	1	730513296
79893E	Snap Ring, ZF4HP18 Holds Low Inner Race In (Eagle)	1	730505108
79896E	Snap Ring, ZF4HP18 Holds Rear Servo Cover On (Eagle)	1	730513303
79897E	Snap Ring, ZF4HP18 Holds Retainer To Case (Eagle)	1	
79900E	Servo Assembly, ZF4HP18 (Eagle)	1	
79901E	Spring, ZF4HP18 Outer Servo (Eagle)	1	
79902E	Piston, ZF4HP18 Servo (Eagle)	1	
S79902E-5	Washers, ZF4HP18 Servo Piston To Pin (2) Sonnax	1	
79904E	Cover, ZF4HP18 Servo (Eagle)	1	
79906E	Spring, ZF4HP18 Inner Servo (Eagle)	1	
79960E	Piston, ZF4HP18 3-4 Clutch (Eagle)	1	
79962E	Piston, ZF4HP18 Intermediate Clutch (Eagle)	1	
79962S	Piston, ZF4HP18 Intermediate Clutch (Saab)	1	
79964E	Piston, ZF4HP18 Forward Clutch (Eagle, Saab)	1	1050302033
79966E	Piston, ZF4HP18 Reverse Clutch (Outer Piston) Eagle	1	
79966EB	Piston, ZF4HP18 Reverse Clutch (Inner Piston) Eagle	1	
79967E	Piston, ZF4HP18 Low/Reverse Clutch (Eagle)	1	
79967S	Piston, ZF4HP18 Low/Reverse Clutch (Saab)	1	
79970E	Spring, ZF4HP18 3-4 Clutch Diaphragm (Eagle)	2	1036330015
79972E	Spring, ZF4HP18 Intermediate Clutch Diaphragm (Eagle)	1	1050331021
79972S	Spring, ZF4HP18 Intermediate Clutch Diaphragm (Saab)	1	
79974E	Spring, ZF4HP18 Forward Clutch Return (Eagle)	1	1050302021
79976E	Spring, ZF4HP18 Reverse Clutch Return (Eagle)	1	1050331020
79976P	Spring, ZF4HP14 Reverse Clutch Return (Peugeot)	1	1036331048

© Whatever It Takes Transmission Parts. Inc.

79977E	Spring, ZF4HP18 Low/Reverse Clutch Diaphragm (Eagle)	1	1050317015
79977S	Spring, ZF4HP18 Low/Reverse Clutch Diaphragm (Saab)	1	
79979A	Spring, ZF4HP18 For Center Support (Audi)	1	
79984E	Retainer, ZF4HP18 Forward Clutch Piston (Aluminum) Eagle	1	1050302020
79986E	Retainer, ZF4HP18 Reverse Clutch Return Spring (Eagle)	1	1050331008
79986P	Retainer, ZF4HP14 Reverse Clutch Return Spring (Peugeot)	2	1036331040
79991E	Linkage Assembly, ZF4HP18 Internal (Eagle)	1	
79998E	Cooler, ZF4HP18 (Eagle)	1	
79999E	Oil Tube, ZF4HP18 (Eagle)	1	

© Whatever It Takes Transmission Parts. Inc.

ZF4HP16

FWD 4 Speed

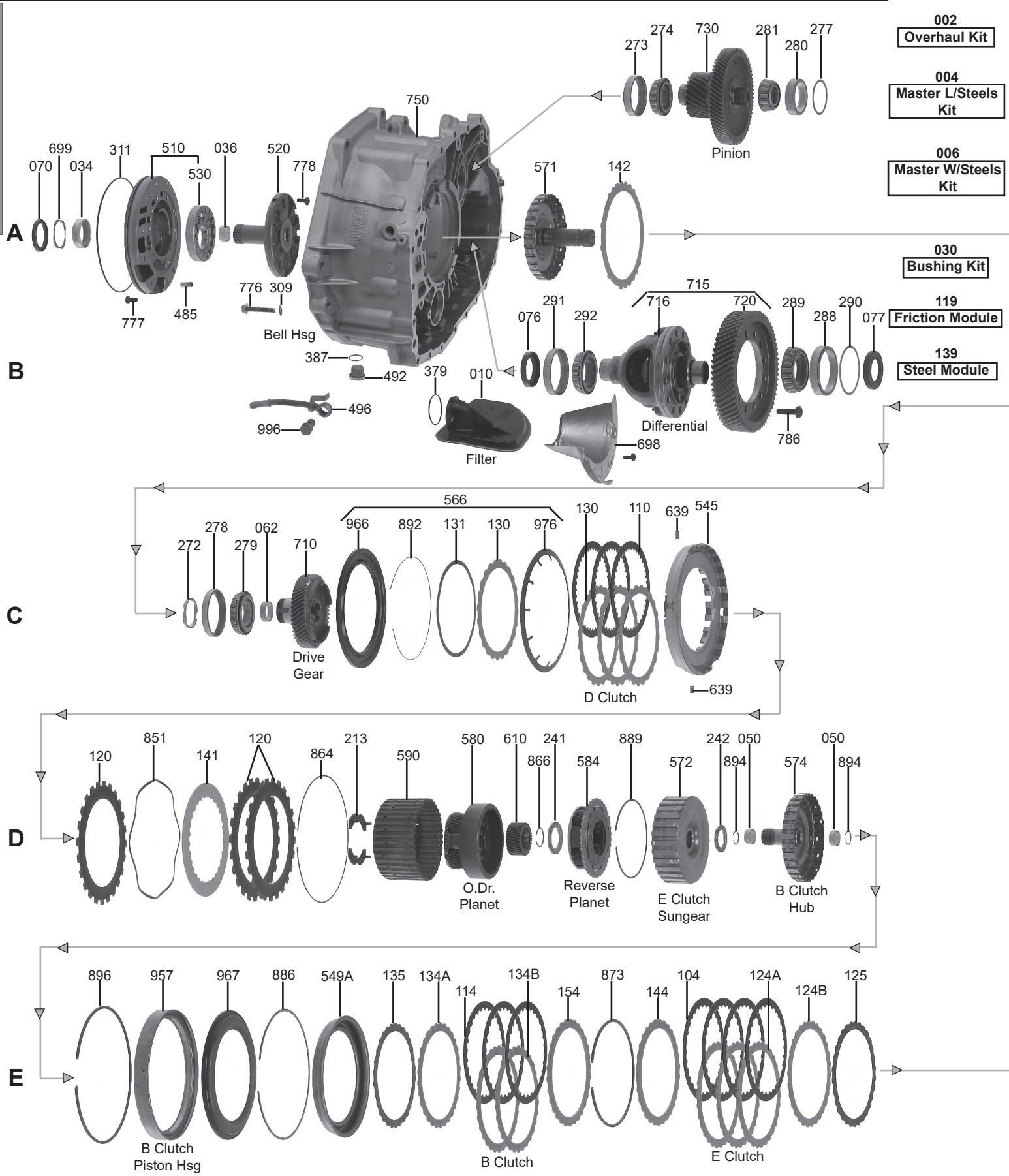

© Whatever It Takes Transmission Parts. Inc.

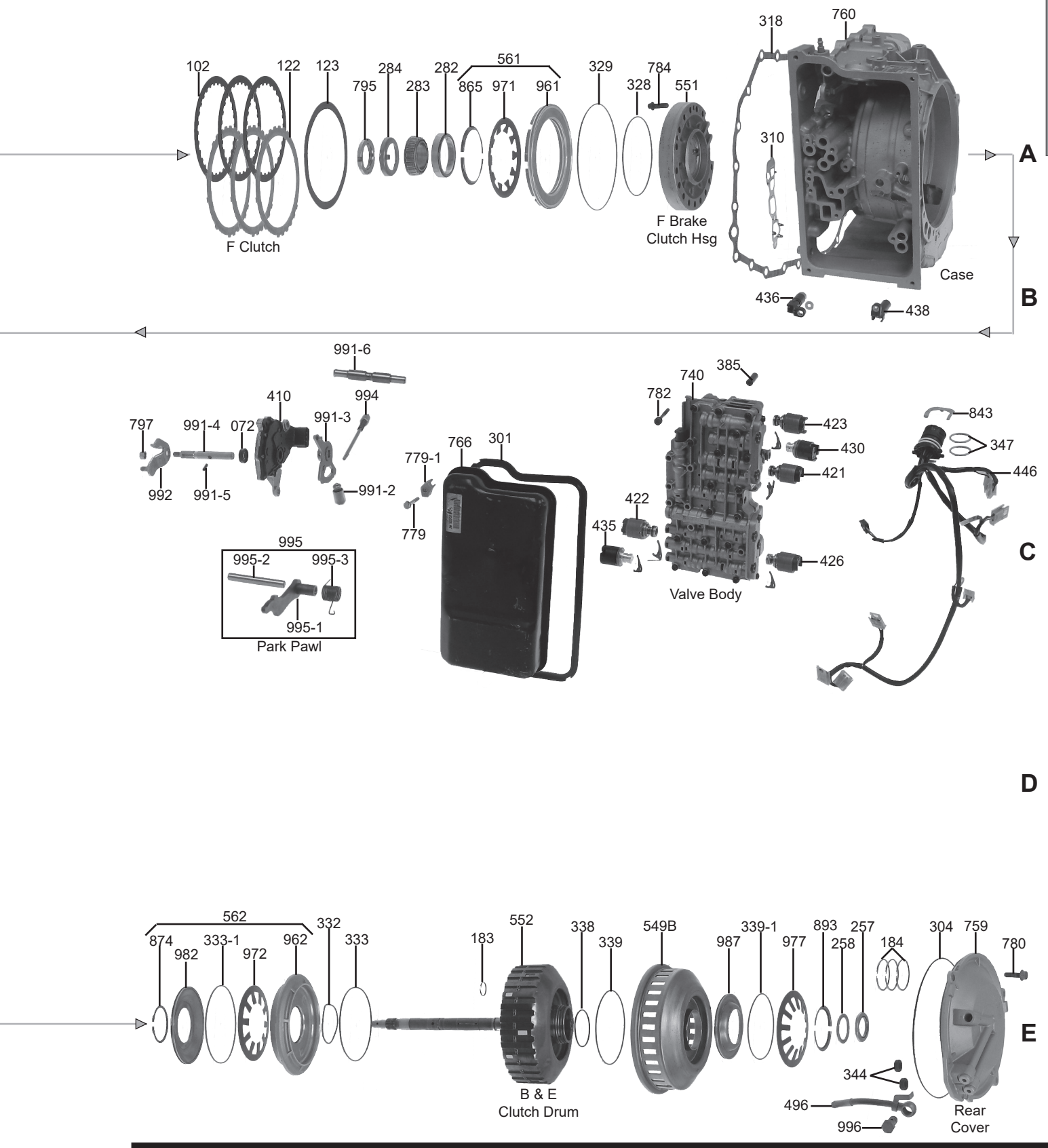

© Whatever It Takes Transmission Parts. Inc.

PART #	OVERHAUL KITS	QTY	REFERENCE #
145002A	Overhaul Kit, ZF4HP16 2002-07(GM, Suzuki, Daewoo) (For Bonded Pistons Sell A145960AK)	1	

PART #	MASTER L/STEELS KIT	QTY	REFERENCE #
145004A	Master L/Steels Kit, ZF4HP16 2002-07 (GM, Suzuki, Daewoo) (For Bonded Pistons Sell A145960AK)	1	

PART #	MASTER W/STEELS KIT	QTY	REFERENCE #
145006A	Master W/Steels Kit, ZF4HP16 2002-07 (GM, Suzuki, Daewoo) (For Bonded Pistons Sell A145960AK)	1	

PART #	FILTERS	QTY	REFERENCE #
145010A	Filter, ZF4HP16 2002-Up (1/2 Metal & 1/2 Plastic) (7 5/8"Long)(5 1/2"Wide)(.880"Tall Oval Pickup) 2002-07 (Also Fits ZF4HP20 1995-Up)	1	

PART #	BUSHINGS	QTY	REFERENCE #
145030A	Bushing Kit, ZF4HP16 2002-07	1	
145034A	Bushing, ZF4HP16 Pump Body (1.572"ID)(1.770"OD)(.530" Wide)(No Grooves) 2002-07	1	
145036A	Bushing, ZF4HP16 Stator (Front)(.873"OD)(.770"ID) (.220"Wide)(Brass) 2002-07	1	
145050A	Bushing, ZF4HP16 B Clutch Hub (Front & Rear)(.787"ID) (.875"OD)(.383"Wide)(Brass) 2002-07	2	
145062A	Bushing, ZF4HP16 Drive Gear (Inner)(1.138"ID)(1.260"OD) (.385"Wide)(Brass) 2002-07	1	

PART #	METAL CLAD SEALS	QTY	REFERENCE #
145070A	Seal, ZF4HP16 Front Pump (2.055"OD) 2002-07	1	
145072A	Seal, ZF4HP16 Linkage (.870"OD)(.285"Thick)(.465"ID) 2002-07	1	
145076A	Seal, ZF4HP16 Axle (Bell Side) 2.255"OD)(1.415"ID)(.415"Thick) 2002-07	1	
145077A	Seal, ZF4HP16 Axle Case Side (2.410"OD)(1.405"ID)(.405"Thick) 2002-07	1	

PART #	FRICTIONS	QTY	REFERENCE #
145102A	Friction, ZF4HP16 F Brake (30 Teeth)(.064"Thick)(6.550"OD) 2002-07	3-10	
145104A	Friction, ZF4HP16 E Clutch (30 Teeth)(.064"Thick)(6.550"OD) 2002-07 (Use 145102A)	4	
145110A	Friction, ZF4HP16 D Brake (40 Teeth)(6.160"OD)(.063"Thick) 2002-07	3	
145114A	Friction, ZF4HP16 B Clutch (30 Teeth)(.064"Thick)(6.550"OD) 2002-07 (Use 145102A)	3	
145119A	Friction Module, ZF4HP16 2002-Up	1	

PART #	STEELS	QTY	REFERENCE #
145120A	Steel, ZF4HP16 C Brake (One Sided)(24 External Teeth)(5.623"ID)(.086"Thick) 2002-07	2	
145122A	Steels, ZF4HP16 F Brake (16 Teeth)(5.625"ID)(.069"Thick) 2002-07	3	
145123A	Cushion, ZF4HP16 F Brake (6.525"OD)(5.645"ID)(.038"Thick) 2003-07	1	
145124A	Steel, ZF4HP16 E Clutch (30 Teeth)(.078"Thick)(5.625"ID) 2002-07	3	
145124B	Steel, ZF4HP16 E Clutch (Bottom)(30 Teeth)(.068"Thick)(5.625"ID) 2002-07	1	
145125A	Cushion, ZF4HP16 E Clutch (30 Teeth)(Wavy) 2002-07 (Use 145135A)	1	
145130A	Steel, ZF4HP16 D Brake (24 Teeth)(5.270"ID)(.078"Thick) 2002-07	4	
145131A	Cushion, ZF4HP16 D Brake Clutch (Waved)(6.210"OD)(.280"Wide)(.050"Thick) 2002-07	1	
145134A	Steel, ZF4HP16 B Clutch (30 Teeth)(.079"Thick)(5.625"ID) 2002-07	1	
145134B	Steel, ZF4HP16 B Clutch (30 Teeth)(.095"Thick)(5.625"ID) 2002-07	2	
145135A	Cushion, ZF4HP16 B Clutch (30 Teeth)(.048"Thick)(5.620"ID)(Wavy) 2002-07 (Also Fits ZF4HP16 E Clutch)	1-2	
145139A	Steel Module, ZF4HP16 2002-Up Up	1	

PART #	PRESSURE PLATES	QTY	REFERENCE #
145141A	Apply Plate, ZF4HP16 C Brake (Double Sided Steel)(30 Teeth Internal)(.115"Thick)(7.265"OD) 2002-07	1	
145142A	Pressure Plate, ZF4HP16 F Brake (16 Teeth)(5.625"ID)(.097"Thick) 2002-07	1	
145144A	Pressure Plate, ZF4HP16 E Clutch (30 Teeth)(.148"Thick)(5.625"ID) 2002-07	1	
145154A	Pressure Plate, ZF4HP16 B Clutch (30 Teeth)(.150"Thick)(5.620"ID) 2002-07	1	

© Whatever It Takes Transmission Parts. Inc.

PART #	SEALING RINGS	QTY	REFERENCE #
145183A	Ring, ZF4HP16 E Clutch Drum Shaft (.800"OD)(.080"Thick)(Steel) Interlocking Ends 2002-07	1	
145184A	Ring, ZF4HP16 Rear Cover (1.815"OD)(.077"Thick)(Metal Interlocking Ends)(.065"Wide) 2002-07	3	

PART #	WASHERS & BEARINGS	QTY	REFERENCE #
145213A	Washer, ZF4HP16 Drive Gear To Planet (2 Piece)(2.500"Long) (2 Round Legs) 2002-07	1	
145241A	Bearing W/Races, ZF4HP16 Overdrive Sungear To Rear Planet (2.040"OD)(1.385"ID) (.176"Thick) 2002-07	1	
145242A	Bearing W/Races, ZF4HP16 Rear Sungear To Rear Hub (1.765"OD) (1.150"ID)(.175"Thick) 2002-07	1	
145257A	Bearing W/Races, ZF4HP16 B Clutch Drum To Rear Cover (1.760"OD)(1.150"ID)(.176"Thick) 2002-07	1	
145258A	Shim, ZF4HP16 B Clutch Drum To Rear Cover (1.790"OD)(1.335"ID)(.094"Thick) 2002-07	1	
145272A	Shim, ZF4HP16 Drive Gear Bearing To Case (1.907"OD)(1.683"ID)(Selective) 2002-07	1	
145273A	Race, ZF4HP16 Pinion To Case (Tapered)(2.560"OD)(2.105"ID)(Timken KLM48510 Poland PD H195) 2002-07	1	
145274A	Bearing, ZF4HP16 Pinion (Tapered)(19 Rollers)(1.375"ID) (Timken KLM485 Poland PO H144) 2002-07	1	
145277A	Shim, ZF4HP16 Pinion To Bell (2.235"OD)(1.890"ID)(Selective) 2002-07	1	
145278A	Race, ZF4HP16 Tapered Drive Gear Bearing To Case (3.035"OD)(2.510"ID)(.456"Thick) (NP436463) 2002-07	1	
145279A	Bearing, ZF4HP16 Drive Gear (Tapered)(20 Rollers)(1.685"ID)(NP688738) 2002-07	1	
145280A	Race, ZF4HP16 Pinion To Case (Tapered)(2.250"OD)(1.820"ID)(.620"Thick)(Timken NP989007) 2002-07	1	
145281A	Bearing, ZF4HP16 Pinion To Case (14 Rollers)(1.085"ID)(Timken NP109544) 2002-07	1	
145282A	Race, ZF4HP16 (Tapered) Bearing To F Brake Clutch Housing (2.675"OD) (2.255"ID)(.530"Thick) (Timken NP742592) 2002-07	1	
145283A	Bearing, ZF4HP16 (Tapered) F Brake Clutch Housing (22 Rollers)(1.613"ID)(Timken NP561514) 2002-07	1	
145284A	Retainer, ZF4HP16 F Brake Clutch Hub Nut (1 Tab)(2.355"OD)(1.590"ID)(.317"/.500"Thick) 2002-07	1	
145288A	Race, ZF4HP16 Differential To Case (Tapered)(3.150"OD)(2.680"ID)(Timken Y32010XM ISO Class Poland PF H194) 2002-07	1	
145289A	Bearing, ZF4HP16 Differential To Case (Tapered)(23 Rollers)(Timken XAA32010XM 180 Class Poland PFH196) 2002-07	1	
145290A	Shim, ZF4HP16 Differential To Case (3.135"OD)(2.780"ID)(Selective) 2002-07	1	
145291A	Race, ZF4HP16 Differential To Bell Housing (Tapered)(2.953"OD)(Timken KLM503310) (Poland PF H164) 2002-07	1	
145292A	Bearing, ZF4HP16 Differential To Bell Housing (Tapered)(24 Rollers)(Timken KLM503349) (Poland NV HO27) 2002-07	1	

PART #	GASKETS & RUBBER COMPONENTS	QTY	REFERENCE #
145300AW	Gasket, ZF4HP16 Pan (Molded Rubber) 2002-Up	1	
145301A	Gasket, ZF4HP16 Side Pan (Molded Rubber)(.420"Thick) (4 Cutouts) 2002-07	1	
145304A	O-Ring, ZF4HP16 Rear Cover To Case (8.590"OD) 2002-07	1	
145309A	Seal/Washer, ZF4HP16 Case Bolt To Bell (.710"OD)(.323"ID)(.070"Thick) 2002-07	23	
145310A	Gasket, ZF4HP16 Pump To Case (Metal)(6 Tabs) 2002-07	1	
145311A	O-Ring, ZF4HP16 Pump Body (7.230"OD) 2002-07	1	
145318A	Gasket, ZF4HP16 Case To Bell Husing 2002-07	1	
145328A	O-Ring, ZF4HP16 F Brake Piston (Inner)(4.520"ID)(.107"Thick) 2002-07	1	
145329A	O-Ring, ZF4HP16 F Brake Piston (Outer)(6.465"OD)(.107"Thick) 2002-07	1	
145331-1A	O-Ring, ZF4HP16 E Clutch Piston Retainer (Outer)(4.785"OD) 2002-07	1	
145332A	O-Ring, ZF4HP16 E Clutch Piston (Inner)(2.150"OD) 2002-07	1	
145333A	O-Ring, ZF4HP16 E Clutch Piston (Outer)(4.750"OD) 2002-07	1	
145338A	O-Ring, ZF4HP16 B Clutch Apply Cushion (Inner)(2.300"OD)(.108"Thick) 2002-07	1	
145339-1A	O-Ring, ZF4HP16 B Clutch Piston (Outer)(4.020"OD)(.110"Thick) 2002-07	1	
145339A	O-Ring, ZF4HP16 B Clutch Apply Cushion (Outer)(4.150"ID)(.110"Thick) 2002-07	1	
145344A	Rubber Boots, ZF4HP16 Rear Cover To Case (.715"OD)(.400"ID)(.265"ID) 2002-07	2	
145347A	O-Ring, ZF4HP16 Case Connector To Case (1.330"OD)(.130"Thick) 2002-07	2	
145379A	O-Ring, ZF4HP16 Filter Neck (2"OD)(.105"Thick) 2002-07	1	
145385A	Transfer Tube, ZF4HP16 Valve Body To Case (Rubber)(1.085" Long)(.440"OD)(.235"ID) 2002-07	1	
145387A	O-Ring, ZF4HP16 Drain Plug To Bell (Green)(.925"OD)(.055"Thick) 2002-07	2	

© Whatever It Takes Transmission Parts. Inc.

PART #	ELECTRICAL COMPONENTS	QTY	REFERENCE #
145410A	Switch, ZF4HP16 PRNDL (2 Bolt)(1/2 Plastic/1/2 Alum) (9 Pin Rectangle Connector) (620W0306) 2002-07	1	
145421A	Solenoid, ZF4HP16 (EDS5) (2.069"Long)(1.179"OD Body) (.667"Snout)(Black) 2002-07	1	
145422A	Solenoid, ZF4HP16 (EDS6) (2.069"Long)(1.175"OD Body) (.667"Snout)(Black) 2002-07	1	
145423A	Solenoid, ZF4HP16 (EDS3) (2.069"Long Body) (1.179"OD Body)(.667"Snout)(Black) 2002-07	1	
145426A	Solenoid, ZF4HP16 (EDS4) (2.075"Long)(1.179"OD Body) (.650"Snout)(Green) 2002-07	1	
145430A	Solenoid, ZF4HP16 (S2) (1.855"Long)(1.165"OD Body) (.590"Snout) 2002-07	1	
145435A	Solenoid, ZF4HP16 (S1)(1.855" Long)(1.165"OD Body) (.590"Snout)(Black) 2002-07	1	
145436A	Sensor, ZF4HP16 OSS Output (1 Bolt)(2.415"Long)(.425"Wide Connector)(Blades Are Enclosed) 2002-07	1	
145438A	Sensor, ZF4HP16 ISS Input (1 Bolt)(2.415"Long) (.535"Wide Connector)(Blades Open On One Side) 2002-07	1	
145446A	Wire Harness, ZF4HP16 (16 Pin Connector)(6 Solenoid Connector)(2 Speed Sensors & 1 Temperature Sensor) 2002-07	1	

PART #	MISCELLANEOUS COMPONENTS	QTY	REFERENCE #
145485A	Dowel Pin, ZF4HP16 Pump Body To Bell (.720" Long)(.315"OD) 2002-07	1	
145492A	Drain Plug, ZF4HP16 Bottom Of Bell (9mm Square Drive) (1.005"OD Head x .751" Long) 2002-07 (Also Fits Fluid Fill Plug Under Axle Seal In Bell)	2	
145496A	Fitting, ZF4HP16 Cooler (Banjo Type)(5 1/4"Long)(.490"OD Line) Rear Cover 2002-07 (Also Fits ZF4HP16 Cooler Bell Housing (Bottom) 2002-07)	2	

PART #	HARDPARTS	QTY	REFERENCE #
145510A	Pump Body W/Gears, ZF4HP16 (7 1/8"OD)(Cast Iron)(15 Teeth Outer/12 Teeth Inner) (Offset Pocket) 2002-07	1	
145520A	Stator, ZF4HP16 (Cast Iron) (DH5ALL Cast) 2002-07	1	
145530A	Pump Gears, ZF4HP16 (.531"Thick)(15 Teeth Outer/12 Teeth Inner)(2 Lugs)(3.463"OD) 2002-07	1	
145545A	Housing, ZF4HP16 D & C Brake Clutch (8.365"OD)(5.240"ID)(1.345"Thick)(24/24 Steel Lugs) (1063 473 037) 2002-07	1	
145549A	Retainer, ZF4HP16 Holds B & E Clutch In Drum (7.680"OD)(5.700"ID)(.840"Thick) (Stamped Steel) 2002-07	1	
145549B	Cushion Apply Ring, ZF4HP16 B Clutch (7.910"OD)(2.120"ID)(32 Slots)(2.590"Tall)(Stamped Steel) 2002-07	1	
145551A	Housing, ZF4HP21 F Brake Piston (Cast Iron)(15 Bolt) (6.615"OD)(1.540"Tall) 2002-07	1	
145552A	Drum W/Shaft, ZF4HP16 B & E Clutch (Stamped Steel)(13 1/4" Long)(30 Teeth Steels) (1.805" Ring Bore) 2002-07	1	
145561A	Piston Kit, ZF4HP16 F Brake Clutch 2002-07	1	
145562AK	Piston Kit, ZF4HP16 E Clutch 2002-07	1	
145566AK	Piston Kit, ZF4HP16 D Brake Clutch 2002-06	1	
145571A	Clutch Hub, ZF4HP16 F Brake (3.525"Tall)(30 Teeth Hub)(Stamped Steel)(35 Splines) 2002-07	1	
145572A	Sungear W/Hub, ZF4HP16 Rear Planet (34 Teeth Sungear)(30 Outer Clutch Teeth)(1.740"Tall) (1.115"ID)(Stamped Steel) 2002-07	1	
145574A	Clutch Hub, ZF4HP16 B Clutch (30 Clutch Teeth)(3.098"Tall) (5.527"OD)(Stamped Steel) 2002-07	1	
145580A	Planet, ZF4HP16 Overdrive (4 Gear) (20 Teeth Right Angle Gears)(86 Teeth Ring Gear) (4.730"OD)(2.660"Tall) 2002-07	1	
145584A	Planet, ZF4HP16 Reverse (Steel)(4 Gear With 27 Teeth, 1 Groove) (40 Outer Lugs) 2002-07	1	
145590A	Ring Gear, ZF4HP16 Overdrive Planet (5.140"OD)(2.750"Tall)(78 Teeth Left Angle) (40 Teeth Outer Clutch Hub) 2002-07	1	
145610A	Sun Gear, Zf4HP16 Overdrive Planet (38 Teeth Left Angle)(2.075"OD)(.965"Thick) 2002-07	1	
145639A	Keyway Lug, ZF4HP16 C & D Housing To Case (.410"Long)(.315"Wide (.270"Thick) 2002-07	2	
145698A	Oil Deflector, ZF4HP16 Differential (In Bell)(3 Bolt Tin)(3 3/4" Tall) 2002-07	1	
145699A	Spacer, ZF4HP16 Front Seal To Pump Body (.059"Thick)(1.580"ID) 2002-07	1	
145710A	Gear, ZF4HP16 Drive (53 Teeth)(Left Angled)(4.645"OD)(2.780"Tall (Right Hand Threads) 2002-07	1	
145716A	Housing, ZF4HP16 Differential (12 Bolt Gear)(24 & 23 Roller Bearings)(6 7/8" Tall) (1.455"OD On Both Noses) 2002-07	1	
145720A	Ring Gear, ZF4HP16 Differential (12 Bolt)(67 Teeth Left Angle, No Grooves)(7.670"OD) (4.010"ID) 2002-07	1	
145730A	Pinion, ZF4HP16 (23 Teeth Right Angle)(12 Park Lugs)(70 Teeth Right Angle Drive Gear) (No Grooves)(19 & 14 Roller Bearings)(4.445"Tall) 2002-07	1	
145740A	Valve Body, ZF4HP16 (6 Solenoids)(Cast #1063 427 095 On Long Body)(#096 & 093 On Two Shorts)(#106 On Center)(#327 011 On Lower Plate) 2002-07	1	

© Whatever It Takes Transmission Parts. Inc.

145750A.....Converter Housing, ZF4HP16 (4 7/8" Top Bolts)(22 Bolts To Case)(Cast # 1068422033)
.....(2.240"OD Axle Seal) 2002-07 .....1.....
145759A.....Rear Cover, ZF4HP16 (5 Bolts)(3 Ring Tower)(Aluminum)(.710"ID Hole In Center)
.....(3 Threaded Plugs) 2002-07 .....1.....
145760A.....Case, ZF4HP16 (22 Bolts To Bell)(4 Bolt Pan)(5 Bolt Rear Cover)(Cast # 1068 401 052)
.....(2.400"OD Axle Seal) 2002-07 .....1.....
145766A.....Pan, ZF4HP16 Side (No Bolt Holes)(2"/ 2 3/8"Deep) 2002-07 .....1.....
145775AK.....Bolt Set, ZF4HP16 Converter (17mm Hex x .640" Long)(10mm Thread) 2002-07 (3 Pieces) .....1.....
145776AK.....Bolt Set, ZF4HP16 Case To Bell (23 Pieces)(13mm Hex)(Two-2.265"Long)(21-1.875"Long)
.....2002-07 .....1.....
145777AK.....Bolt Set, ZF4HP16 Pump To Bell Housing (8 Pieces)(T27 x .784" Long) 2002-07 .....1.....
145778AK.....Bolt Set, ZF4HP16 Pump Body To Stator (9 Pieces)(T27 x .784") 2002-07 .....1.....
145779-1AK....Hold Down, ZF4HP16 Pan Bolt To Case (Aluminum)(.880"Thick)(.995"Wide)(4 Pieces)
.....2002-07 .....1.....
145779AK.....Bolt Set, ZF4HP16 Pan To Case (4 Pieces)(10mm Hex x 1.645"Long) 2002-07 .....1.....
145780AK.....Bolt Set, ZF4HP16 Rear Cover (13mm Hex x 1.405"Long) (5 Pieces) 2002-07 .....1.....
145782AK.....Bolt Set, ZF4HP16 Valve Body To Case (T27 x 2.320"Long) (7 Pieces) 2002-07 .....1.....
145784A.....Bolt Set, ZF4HP16 Holds F Brake Piston Housing To Case (15 Pieces)
.....(E10 Star Head x 1.305"Long) 2002-07 .....1.....
145786AK.....Bolt Set, ZF4HP16 Differential To Ring Gear (17mm Hex x 1.635"Long)(12 Pieces) 2002-07 ....1.....
145795A.....Nut, ZF4HP19 F Brake Clutch Hub (1.518"ID)(2.200"OD)(.310"Thick) (4 Notches)(Right Hand
.....Thread) 2002-07 .....1.....
145797A.....Nut, ZF4HP16 External Linkage (12mm Hex)(.280"ID) 2002-07 .....1.....
145843A.....C-Clip, ZF4HP16 Case Connector (1.710"Wide)(1.575"Long) (.040"Thick) 2002-07 .....1.....
145851A.....Cushion, ZF4HP16 C Brake Clutch (.043"Thick)(7.715"OD)(Wavy) 2002-07 .....1.....
145864A.....Snap Ring, ZF4HP16 Holds C Brake Clutch In Housing (8.170"OD)(.050"Thick)(.110"Wide)
.....2002-07 .....1.....
145865A.....C-Clips, ZF4HP16F Brake Piston Assembly (3.325"OD)(.157"Thick)(.233"Wide)(2 Pieces)
.....2002-07 .....1.....
145866A.....Snap Ring, ZF4HP16 Overdrive Sun Gear Stop (.066"Thick) 2002-07 .....1.....
145873A.....Snap Ring, ZF4HP16 E Clutch (Top) (6.885"OD)(.115"Thick)(.196"Wide) 2002-07 .....1.....
145874A.....Snap Ring, ZF4HP16 E Clutch Piston Retainer (2.270"OD)(.079"Thick)(2 Eyelets) 2002-07 .....1.....
145886A.....Snap Ring, ZF4HP16 Holds B & E Clutch In Drum (8.290"OD)(.075"Thick)(.190"Wide) 2002-07 1.....
145889A.....Snap Ring, ZF4HP16 Holds Planets In Ring Gear (5.050"OD)(.077"Thick)(.138"Wide) 2002-07 1.....
145892A.....Snap Ring, ZF4HP16 Holds D Brake Clutch In Housing (6.650"OD)(.060"Thick)(Hooked Ends)
.....2002-07 .....1.....
145893A.....C Clips, ZF4HP16 B Clutch Piston (2.502"OD)(.132"Thick)(.255"Wide) 2002-07 .....2.....
145894A.....Snap Ring, ZF4HP16 Rear Clutch Hub (E Clutch) To Shaft (.883"OD)(.079"Thick)(Round Wire
.....Type) 2002-07 (Also Fits B Clutch Hub To Drum) .....1-2.....
145896A.....Snap Ring, ZF4HP16 Holds B Piston Housing In Case (8.765"OD)(.130"Thick)(.196"Wide)
.....2002-07 .....1.....
145957A.....Housing, ZF4HP16 B Clutch Piston (Steel)(8.360"OD)(7.185"ID)(.970"Thick)(One Outer Hole
.....& Lug) 2002-07 .....1.....
145960AK.....Piston Kit, ZF4HP16 (Bonded) 2002-Up .....1.....
145961A.....Piston, ZF4HP19 F Brake Clutch (6.435"OD)(4.540"ID)(.485"Thick) (Aluminum)
.....(Cast 1068 477 001 SH-8) 2002-07 .....1.....
145962A.....Piston, ZF4HP16 E Clutch (Aluminum)(6.180"OD)(2.180"ID) 2002-07 .....1.....
145966A.....Piston, ZF4HP16 D Brake (Bonded)(7.600"OD)(5.590"ID)(.420"Thick) 2002-07 .....1.....
145967A.....Piston, ZF4HP16 B Clutch (Bonded)(8.265"OD)(5.770"ID)(.455"Thick)
.....(1063 375 014 VDK 210x11) 2002-07 .....1.....
145971A.....Return Spring, ZF4HP16 F Brake Clutch Piston (10 Fingers)(4.950"OD)(.069"Thick) 2002-07 ..1.....
145972A.....Return Spring, ZF4HP16 E Clutch Piston (10 Fingers)(4.670"OD)(.069"Thick) 2002-07 .....1.....
145976A.....Spring, ZF4HP16 D Brake Return (12 Fingers)(7.880"OD)(.070"Thick) 2002-07 .....1.....
145977A.....Return Spring, ZF4HP16 B Clutch Piston (12 Fingers)(4.700"OD)(.065"Thick) 2002-07 .....1.....
145982A.....Retainer, ZF4HP16 E Clutch Piston (4.750"OD)(2.125"ID)(Stamped Steel) 2002-07 .....1.....
145987A.....Piston, ZF4HP16 Return Spring B Clutch (3.990"OD)(2.125"ID) 2002-07 .....1.....
145991-2A.....Detent Ball & Capsule, ZF4HP16 (1.420" Long)(.670"OD) 2002-07 .....1.....
145991-3A.....Rooster Comb, ZF4HP16 (7 Detents)(.475"ID)(.585"Thick)(.230"OD Stud) 2002-Up .....1.....
145991-4A.....Manual Shaft, ZF4HP16 (3.830" Long)(.470"OD)(14 Splines) 2002-07 .....1.....
145991-5A.....Roll Pin, ZF4HP16 Linkage (.200"OD)(.875"Long) Holds Rooster Comb To Manual Shaft
.....2002-07 .....1.....
145991-6A.....Actuator Rod, ZF4HP16 (4.480" Long)(.625"OD)(.470"OD On Each End)(1 Groove In Center)
.....2002-07 .....1.....
145992A.....Manual Lever, ZF4HP16 (1 Stud) (V Shaped)(.310"OD Of Stud) 2002-07 .....1.....
145994A.....Park Rod, ZF4HP16 (7.440"Long) (.230"OD Rod)(.625"OD Actuator Ball) 2002-07 .....1.....
145995-1A.....Park Pawl, ZF4HP16 (5.500" Long)(.310"Thick)(.475"ID Hole X .480"Long At Shaft Hole)
.....2002-07 .....1.....
145995-2A.....Pivot Rod, ZF4HP16 Park (3.610"Long)(.470"OD) 2002-07 .....1.....
145995-3A.....Return Spring, ZF4HP16 Park Pawl (.975"OD At Coil) (.805"ID)(.085"Wire) With 2 Bends On
.....End 2002-07 .....1.....

© Whatever It Takes Transmission Parts. Inc.

PART #	HARDPARTS (Continued)	QTY	REFERENCE #
145995A	Park Pawl Assy, ZF4HP14 (3 Pieces) 2002-07	1	
145996A	Bolt, ZF4HP16 Cooler Fitting (1.335”Long)(19mm Hex Head) 2002-07	1	

© Whatever It Takes Transmission Parts. Inc.

© Whatever It Takes Transmission Parts. Inc.

PART #	PAPER & RUBBER KIT	QTY.	REFERENCE #
179000A	Paper & Rubber Kit, ZF5HP18 BMW (RWD) 1993-Up	1	

PART #	OVERHAUL KITS	QTY.	REFERENCE #
179002A	Overhaul Kit, ZF5HP18 (With Pistons) 1991-99 (BMW 3/5/7/8 Series)	1	

PART #	MASTER L/STEEL KIT	QTY.	REFERENCE #
179004A	Master L/Steels Kit, ZF5HP18 BMW (RWD) 1991-99 (For Bonded Pistons Sell 179960AK)	1	

PART #	MASTER W/STEEL KIT	QTY.	REFERENCE #
179006A	Master W/Steels Kit, ZF5HP18 (BMW) 1992-99 (For Bonded Pistons Sell 179960AK) (For Units Ending In 081/087/088)	1	
179006B	Master W/Steels Kit, ZF5HP18 (BMW) 1992-99 (For Bonded Pistons Sell 179960AK) (For Units Ending In 097/099)	1	

PART #	METAL CLAD SEALS	QTY.	REFERENCE #
69070	Seal, ZF5HP18 Front (2.060”OD)	1	

PART #	FILTER	QTY.	REFERENCE #
179010A	Filter, ZF5HP18 BMW (RWD) 1993-Up	1	1056298047

PART #	FILTER KIT	QTY.	REFERENCE #
179011A	Filter Kit, ZF5HP18 BMW (RWD) 1993-Up	1	

PART #	BANDS	QTY.	REFERENCE #
179020A	Band, ZF5HP18 (BMW) Brake 1992-99	1	501208847

PART #	BUSHINGS	QTY.	REFERENCE #
179030A	Bushing Kit, ZF5HP18 BMW 1993-Up	1	

PART #	METAL CLAD SEALS	QTY.	REFERENCE #
179070A	Seal, ZF5HP18 Front BMW (RWD) 1993-Up	1	
179072A	Seal, ZF5HP18 Manual Lever BMW (RWD) 1993-Up	1	
179074A	Seal, ZF5HP18 Extension Housing BMW (RWD) 1993-Up	1	

PART #	FRICTIONS	QTY.	REFERENCE #
179119A	Friction Module, ZF5HP18 (BMW) 1992-99	1	

PART #	STEELS	QTY.	REFERENCE #
179139A	Steel Module, ZF5HP18 (BMW) (For Units Ending In 081/087/088) 1992-99	1	
179139B	Steel Module, ZF5HP18 (BMW) (For Units Ending In 097/099) 1992-99	1	

PART #	VALVE BODY KITS	QTY	REFERENCE #
179165A	Valve Body Kits, ZF5HP18 (BMW) 1992-99	1	

PART #	GASKETS & RUBBER COMPONENTS	QTY	REFERENCE #
179300A	Gasket, ZF5HP18 (RWD)(Rubber)	1	
175381B	O-Ring, ZF5HP18 (BMW) Stator Body 1993-Up	1	

PART #	TECHNICAL MANUALS	QTY.	REFERENCE #
179400A	Repair Manual, ZF5HP18 RWD	1	
159400A-1	Valve Body Manual, ZF5HP18	1	
179400FD	Manual, ZF5HP18 (BMW) Function Description 1992-99	1	

© Whatever It Takes Transmission Parts. Inc.

PART #	ELECTRICAL COMPONENTS	QTY.	REFERENCE #
179420A	Solenoid Kit, ZF5HP18 (BMW) 1992-99 (Contains: 5 Shift, 1 LOck-Up & Valve Housing With Pressure Regulator Solenoid) (For Units Ending In 087/088/097/099)	1	
179420B	Solenoid Kit, ZF5HP18 (BMW) 1992-99 (Contains: 5 Shift, 1 LOck-Up & Valve Housing With Pressure Regulator Solenoid)(For Units Ending In 081)	1	
179436A	Sensor, ZF5HP18 (BMW) Input & Output Speed 1992-99	2	

PART #	HARDPARTS	QTY.	REFERENCE #
179510A	Pump Body W/Gears, ZF5HP18 (BMW) 1992-99	1	
179507B-5	Bypass Ball, ZF5HP18 (BMW) Pump 1992-Up	1	
179551A	Drum, ZF5HP18 (BMW) Overdrive Direct Clutch (F) 1992-99 (For Units Ending In 087/088/097/099)	1	
179558A	Drum, ZF5HP18 (BMW) Low/Reverse & Overrun Clutch (D & G) 1992-99 (For Units Ending In 087/088/097/099)	1	
179760A	Case, ZF5HP18 (BMW)	1	
179960AK	Piston Kit, ZF5HP18 (BMW) 1992-99 (Bonded) (Contains D & F Clutch)	1	

© Whatever It Takes Transmission Parts. Inc.

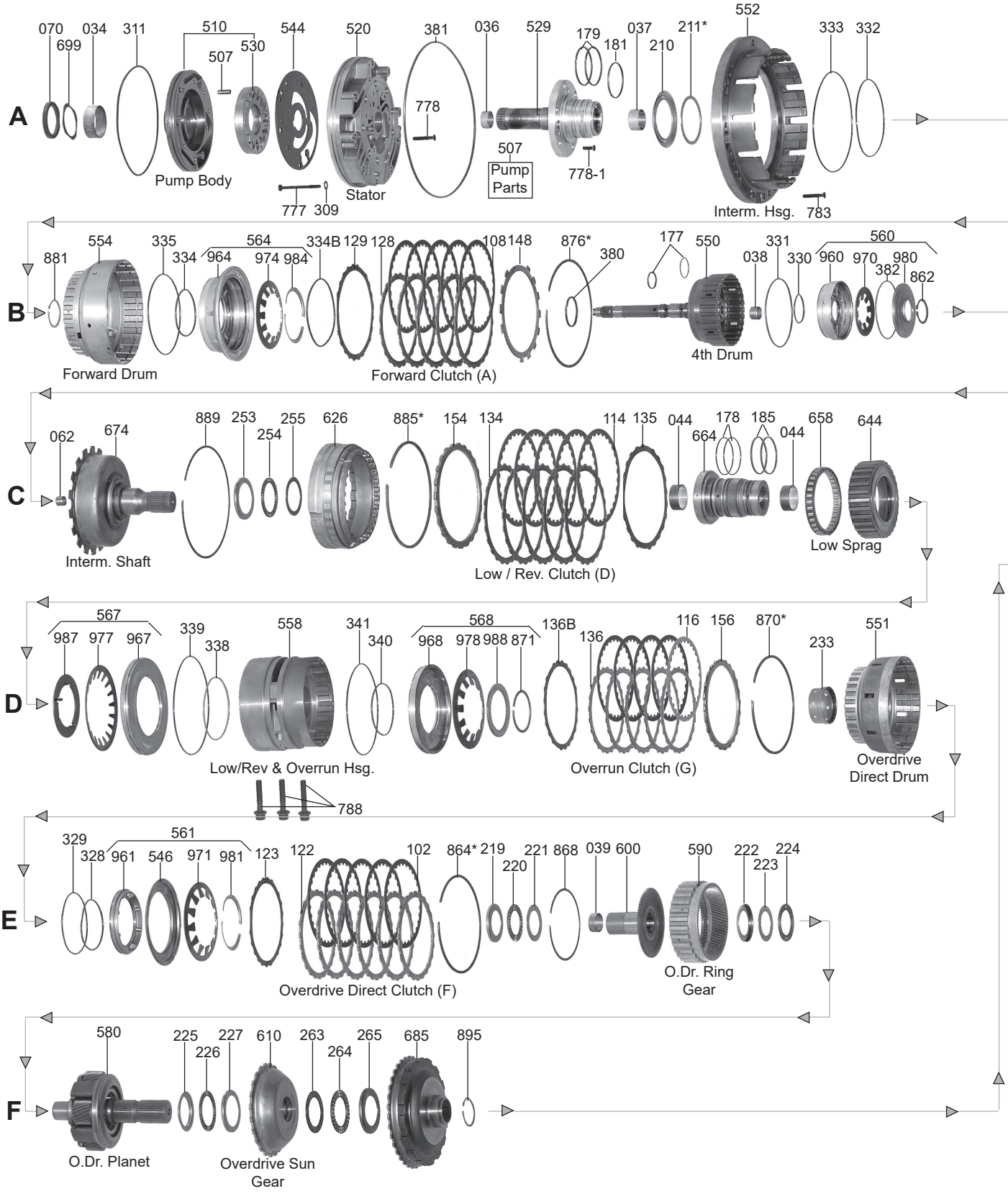

© Whatever It Takes Transmission Parts. Inc.

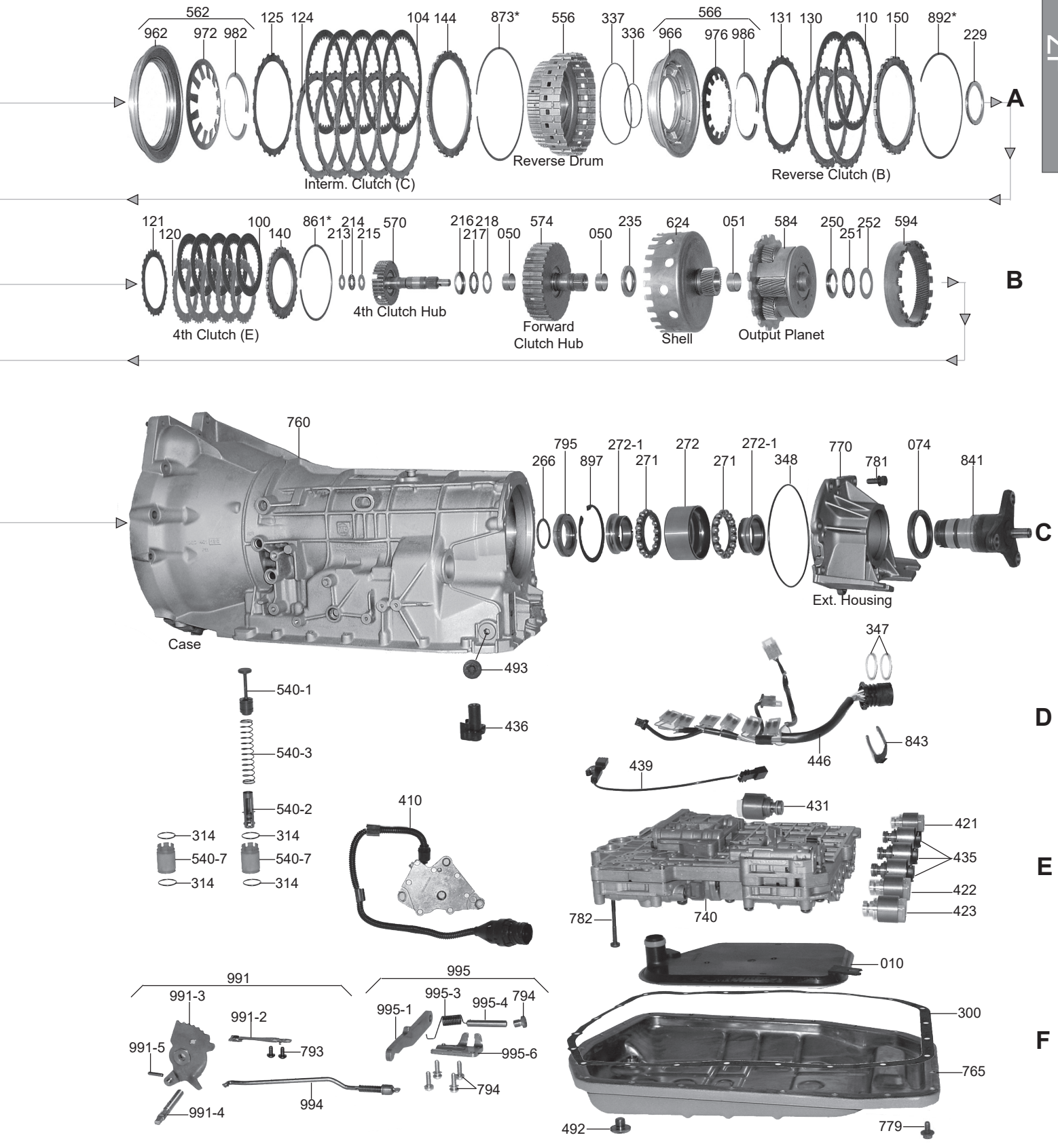

1-800-940-0197

© Whatever It Takes Transmission Parts. Inc.

ZF5HP19FL / ZF5HP19FLA (Audi / VW) FWD/AWD 5 Speed

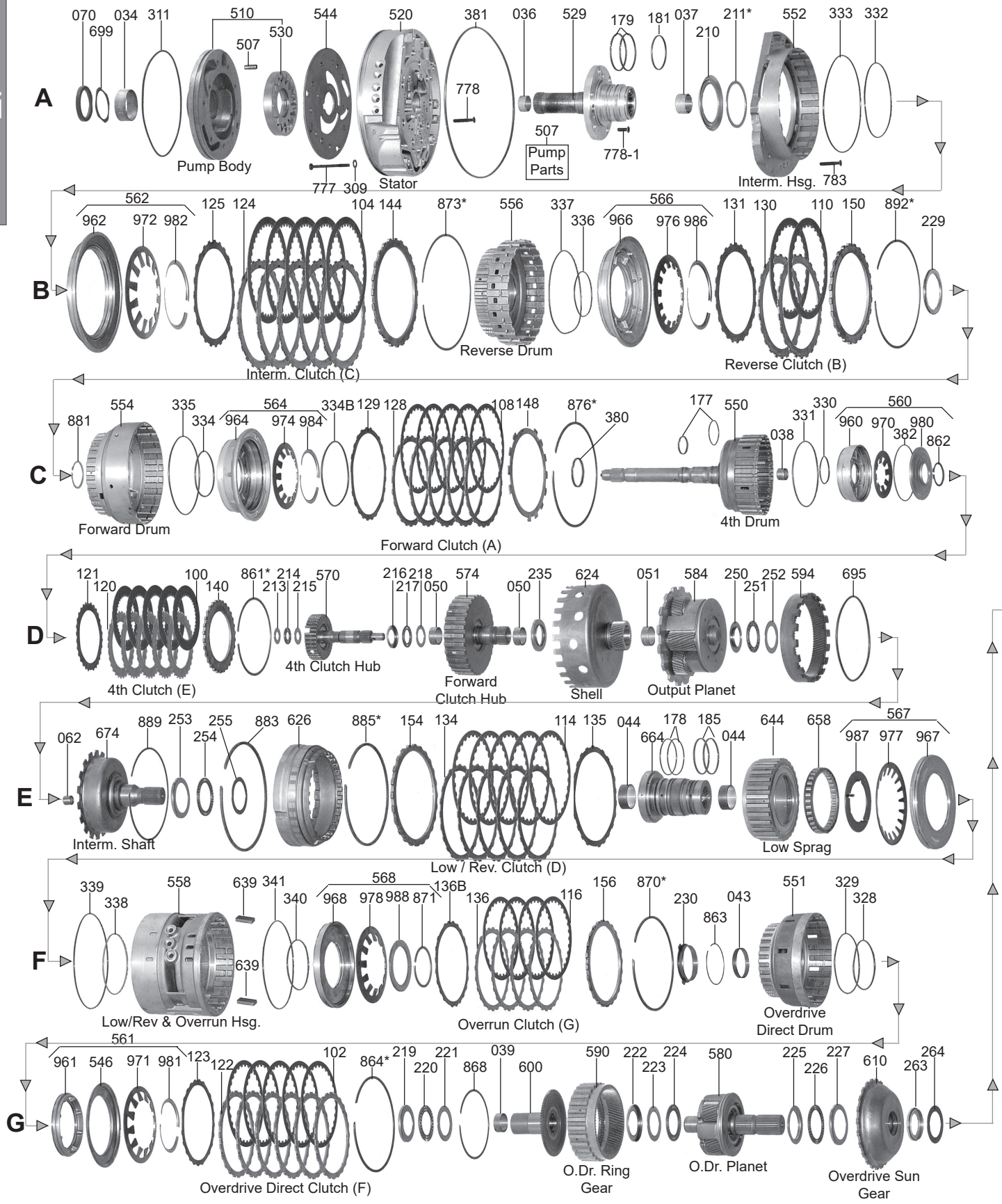

© Whatever It Takes Transmission Parts. Inc.

ZF5HP19FL / ZF5HP19FLA (Audi / VW)

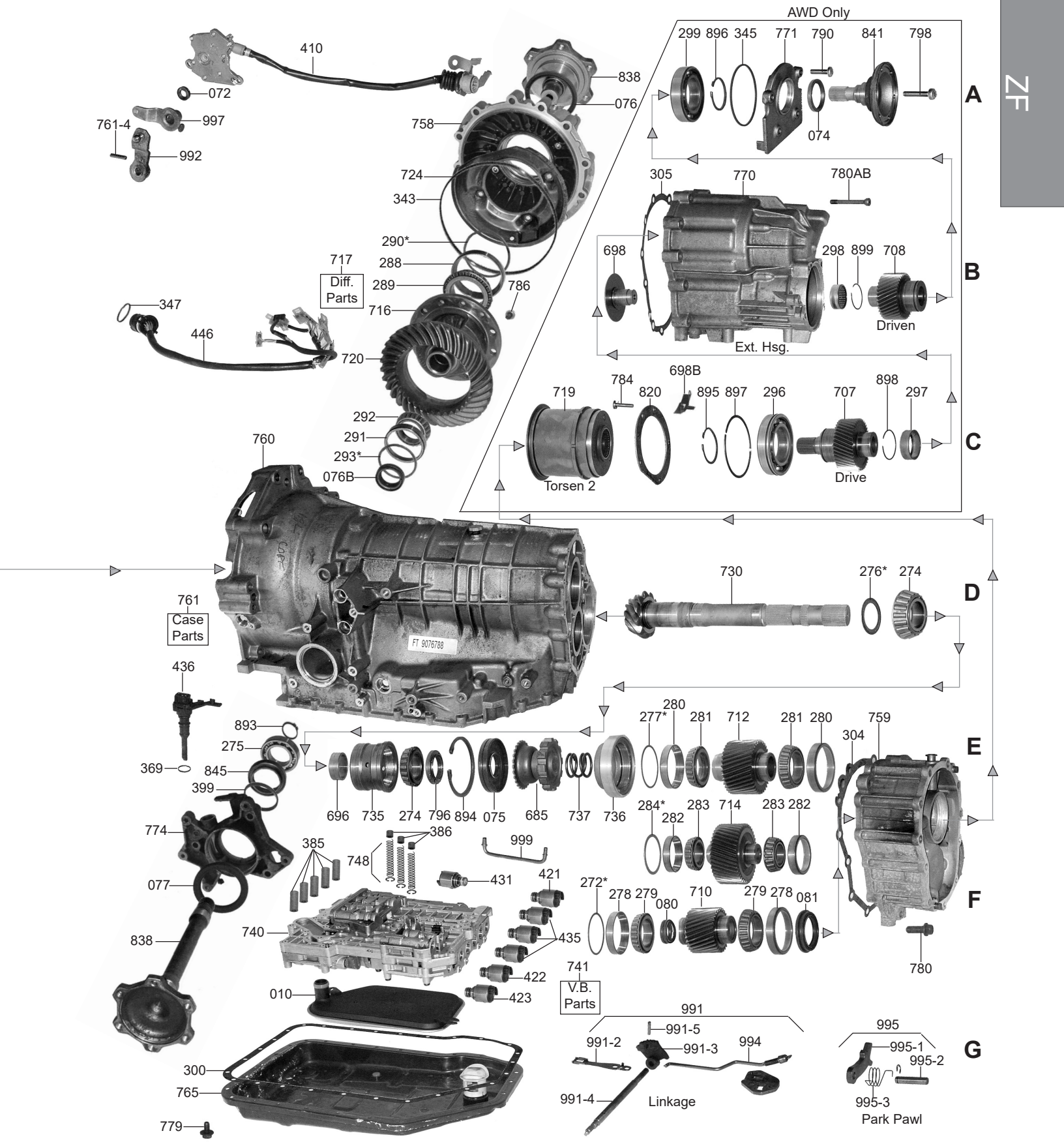

1-800-940-0197

© Whatever It Takes Transmission Parts. Inc.

PART #	OVERHAUL KIT	QTY	REFERENCE #
175002A	Overhaul Kit, ZF5HP19FL (Audi/Porsche/Volkswagen) 1994-Up	1	
175002AC	Overhaul Kit, ZF5HP19FLA (Audi/Volkswagen) (AWD) 1995-Up	1	
175002B	Overhaul Kit, ZF5HP19 (BMW) 1997-04	1	

PART #	MASTER L/STEELS KIT	QTY	REFERENCE #
175004A	Master L/Steels Kit, ZF5HP19FL (Audi/Porsche/VW) 1994-Up (For Units Ending In 049/059/072/088)	1	
175004AA	Master L/Steels Kit, ZF5HP19FL (Audi/Porsche/VW) 1994-Up (For Units Ending In 005/006/011/013/021/027/106)	1	
175004AC	Master L/Steels Kit, ZF5HP19FLA (Audi/VW) (AWD) 1995-Up (For Units Ending In 030/035/044/053/054/063/065/073/075/087/093/100/101/103)	1	
175004AD	Master L/Steels Kit, ZF5HP19FLA (Audi/VW) (AWD) 1995-Up (For Units Ending In 002/012/013/018/036)	1	
175004B	Master L/Steels Kit, ZF5HP19 (BMW) 1997-04	1	

PART #	MASTER W/STEELS KIT	QTY	REFERENCE #
175006A	Master W/Steels Kit, ZF5HP19FL (Audi/Porsche/VW) 1994-Up (For Units Ending In 049/059/072/088)	1	
175006AA	Master W/Steels Kit, ZF5HP19FL (Audi/Porsche/VW) 1994-Up (For Units Ending In 005/006/011/013/021/027/106)	1	
175006AC	Master W/Steels Kit, ZF5HP19FLA (Audi/VW) (AWD) 1995-Up (For Units Ending In 030/035/044/053/054/063/065/073/075/087/093/100/101/103)	1	
175006AD	Master W/Steels Kit, ZF5HP19FLA (Audi/VW) (AWD) 1995-Up (For Units Ending In 002/012/013/018/036)	1	
175006AE	Master W/Steels Kit, ZF5HP19FLA (Audi/VW) (AWD) 1995-Up (For Units Ending In 044/053/063/075/087/093/100/103)	1	
175006B	Master W/Steels Kit, ZF5HP19 (BMW) 1997-04	1	

PART #	FILTERS	QTY	REFERENCE #
175010B	Filter, ZF5HP19FL/FLA 1994-Up (Audi/VW)	1	
175010BB	Filter, ZF5HP19 (BMW) (RWD) 1997-Up	1	
175010C	Filter, ZF5HP19FL (Porche) 1998-Up	1	

PART #	BUSHINGS	QTY	REFERENCE #
175034A	Bushing, ZF5HP19/FL/FLA Pump Body (.530" Thick)(1.765"ID) 1994-Up	1	
S175034AX	Bushing, ZF5HP19FL/FLA Pump Body (Oversized) (Sonnax) 1994-Up (Pump Body Must Be Machined)(Fixes A Body With Spun Bushing)	1	
175036A	Bushing, ZF5HP19/FL/FLA Stator (Front)(.885"ID) 1994-Up	1	
175037A	Bushing, ZF5HP19/FL/FLA Stator (Rear)(1.004"ID) 1994-Up	1	
175038A	Bushing, ZF5HP19/FL/FLA 4th Clutch Drum (Rear)(.475"ID) 1994-Up (Also Fits ZF5HP19/ ZF5HP19FL/FLA Intermediate Shaft (Front)(#062) 1994-Up	1-2	
175039A	Bushing, ZF5HP19/FL/FLA Overdrive Ring Gear Hub (Front)(1.028"ID) 1994-Up	1	
175043A	Bushing, ZF5HP19FL/FLA Overdrive Direct Drum (2.168"ID) 1994-Up	1	
175044A	Bushing, ZF5HP19/FL/FLA Low Sprag Inner Race (1.377"ID) Brass (Takes 2) 1994-Up	2	
175050A	Bushing, ZF5HP19/FL/FLA Forward Clutch Hub (.825"ID)(Brass) (Takes 2) 1994-Up	2	
175051A	Bushing, ZF5HP19/FL/FLA Shell (.400" Thick)(1.185"ID) 1994-Up	1	
175062A	Use 175038A.	1	

PART #	METAL CLAD SEALS	QTY	REFERENCE #
79070A	Seal, ZF5HP19 / ZF5HP19FL / ZF5HP19FLA Front	1	
175070B	Use 79070A.	1	
175072A	Seal, ZF5HP19FL/FLA Manual Lever 1994-Up	1	
175074AB	Seal, ZF5HP19FLA (AWD) Extention Housing (2.060"OD) 1994-Up	1	
175074BA	Seal, ZF5HP19 (BMW) (2WD) Extension Housing (.308" Thick)(2.683"OD)(2.025"ID) 1997-Up	1	
175075A	Seal, ZF5HP19FL/FLA Pinion (Double Lip) (3.477"OD) 1994-Up	1	
175076A	Seal, ZF5HP19FL/FLA Axle (Differential Cover)(Passenger Side)(Outer)(3.550"OD) 1994-Up	1	
175076AB	Seal, ZF5HP19FL/FLA Long Axle Shaft To Case (Differential Side) (1 3/4"OD) 1994-Up	1	
175077A	Seal, ZF5HP19FL/FLA Axle (Drivers Side) (3.155"OD) 1994-Up	1	
175080A	Seal, ZF5HP19FLA (AWD) Drive Gear (Front) (1.495"OD) 1994-Up	1	
175081AB	Seal, ZF5HP19FLA (AWD) Drive Gear (Rear) (2.642"OD) 1994-Up	1	

© Whatever It Takes Transmission Parts. Inc.

PART #	FRICTION CLUTCH	QTY	REFERENCE #
175100A	Use 79100E	2	
79100E	Friction, ZF4HP19/FL/FLA 4th Clutch #100 (.063")(36 Teeth)(4.25"OD) 1994-Up	2	
175102A	Use 79104P	5	
79104P	Friction, ZF5HP19/FL/FLA Overrun Clutch #116 And Overdrive Direct Clutch #102 (.061) (5.310"OD) 1994-Up	4-14	
175104A	Friction, ZF5HP19/FL/FLA Intermediate Clutch (.062") 40 Teeth (6 5/8"OD) 1994-Up	5	
175108A	Friction, ZF5HP19/FL/FLA Forward Clutch (.065") 30 Teeth (5.780"OD) 1994-Up (Also Fits ZF5HP19/FL/FLA Low/Reverse Clutch #114 1994-Up)	5-11	
175110A	Friction, ZF5HP19/FL/FLA Reverse Clutch (.079") 30 Teeth (6 1/8"OD) 1994-Up	2	
175114A	Use 175108A	6	
175116A	Use 79104P	4-9	
175119A	Friction Module, ZF5HP19FL/FLA (Audi/VW) 1994-Up (For FL Units Ending In 034/037/038/041/042/043/044/045/046/049/059/061/064/065/070/072/079/080/081/082/084/085/086/087/088/089/090/091/092/093/094/095/099/100/101/104/105/106/114/116/117/119) (Also Fits FLA Units Ending 019/020/021/024/026/028/030/035/041/043/044/046/049/053/054/057 Through 071/073/075/085/086/087/089/090/094/100/101/102/103/104/107)	1	
175119AA	Friction Module, ZF5HP19FL/FLA (Audi/VW) 1994-Up (For FL Units Ending In 003/004/005/006/008 Thru 015/021/023 Thru 031/050/053/054/066/067/068/077/109/110/115)(For FLA Units Ending In 002/003/004/008/009/012 Thru 018/025/036/047/048/080)(For HL Units Ending In 002/003/004/)(For HLA Units Ending In 002/003)	1	
175119B	Friction Module, ZF5HP19 (BMW) 1997-04	1	

PART #	STEEL CLUTCH	QTY	REFERENCE #
175120A	Use 79120E	5	
79120E	Pressure Plate, ZF5HP19/FL/FLA 4th Clutch (.071")(3.075"ID)(30 Teeth)(E Pack) 1994-Up	5	
175121A	Steel, ZF5HP19/FL/FLA 4th Clutch (.032") (28 Teeth) (3.385"ID) (Cushion) 1994-Up	1	
175122A	Steel, ZF5HP19/FL/FLA Overdrive Direct Clutch (.118") (24 Teeth) (4.725"ID) 1994-Up	6	
175123A	Use 175136BA	1	
175124A	Steel, ZF5HP19FL/FLA Intermediate Clutch (.070") (24 Teeth) (5 3/4"ID) 1994-Up	5	
175124AB	Steel, ZF5HP19FL/FLA Intermediate Clutch (.095") 1994-Up	5	
175124AC	Steel, ZF5HP19/FL/FLA Intermediate Clutch (.128" (24 Teeth) (5 3/4"ID) 1994-Up (Also Fits ZF5HP19/FL/FLA Pressure Plate #144 1994-Up)	5	
79124P	Steel, ZF5HP19/FL/FLA Overrun Clutch #136 (.071")(24 Teeth)(4.730"ID)(C Pack) 1994-Up	5	
175125A	Steel, ZF5HP19/FL/FLA Intermediate Clutch (.035") (24 Teeth) (5 3/4"ID) (Waved) 1994-Up	1	
175128A	Use 79128E	5-11	
79128E	Steel, ZF5HP19/FL/FLA Forward Clutch #128 (.071") 24 Teeth (5.200"ID) (A Pack) 1994-Up (Also Fits ZF5HP19FL/FLA Low/Reverse Clutch #134 1994-Up)	5-11	
175129A	Steel, ZF5HP19/FL/FLA Forward Clutch Cushion (.040") (22 Teeth) (5.205"ID) (Cushion) 1994-Up (Also Fits ZF5HP19/FL/FLA Low/Reverse Clutch #135 1994-Up)	1-2	
175130A	Steel, ZF5HP19/FL/FLA Reverse Clutch (.070") 24 Teeth (5 3/16"ID) 1994-Up	2	
175131A	Steel, ZF5HP19FL/FLA Reverse Clutch Cushion (.032") 21 Teeth (5 3/16"ID) 1994-Up	1	
175131B	Steel, ZF5HP19 Reverse Clutch Cushion (.032")(24 Teeth)(5 3/16"ID) 1997-Up	1	
175134A	Use 79128E	5	
175135A	Use 175129A	1	
175136A	Use 79124P	4	
175136BA	Steel, ZF5HP19/FL/FLA Overrun Clutch Cushion (.035") (22 Teeth) 1994-Up (Also Fits ZF5HP19/FL/FLA Overdrive Direct Clutch #123 1994-Up)	1-2	
175139A	Steel Module, ZF5HP19FL/FLA (Audi/VW) 1994-Up (For Units Ending In 049/059/072/088 In The FL Series Or 030/035/054/065/073/101 In The FLA Series)	1	
175139AA	Steel Module, ZF5HP19FL/FLA (Audi/VW) 1994-Up (For Units Ending In 005/006/011/013/021/027/106 In The FL Series Or 002/012/013/018/036/044/053/063/075/087/093/100/103 In The FLA Series)	1	
175139B	Steel Module, ZF5HP19 (BMW) 1997-04	1	

PART #	PRESSURE PLATES	QTY	REFERENCE #
175140A	Pressure Plate, ZF5HP19/FL/FLA 4th Clutch (.138") 30 Teeth (3.070"ID) 1994-Up	1	
175144	Use 175124AC	1	
175144A	Pressure Plate, ZF5HP19FL/FLA Intermediate Clutch (.157") 24 Teeth (5 3/4"ID) 1994-Up	1	
175148A	Pressure Plate, ZF5HP19/FL/FLA Forward Clutch (.178") 24 Teeth (5 3/16"ID) 1994-Up (Also Fits ZF5HP19/FL/FLA Low/Reverse Clutch #154 1994-Up)	1-2	
175150A	Pressure Plate, ZF5HP19/FL/FLA Reverse Clutch (.177") 24 Teeth (5 3/16"ID) 1994-Up	1	
175154A	Use 175148A	1	
175156A	Pressure Plate, ZF5HP19/FL/FLA Overrun Clutch (.176") 24 Teeth (4.730"ID) 1994-Up	1	

© Whatever It Takes Transmission Parts. Inc.

PART #	VALVE BODY KITS	QTY	REFERENCE #
175165B	Valve Body Kit, ZF5HP19 (BMW) 1997-04	1	

PART #	SEALING RINGS	QTY	REFERENCE #
175175A	Ring Kit, ZF5HP19/FL/FLA 1995-04	1	
175177AAT	Ring, ZF5HP19/FL/FLA 4th Clutch Drum Shaft (Rear)(1.086"OD)(Teflon) 1994-Up	1	
175177AT	Ring, ZF5HP19/FL/FLA 4th Clutch Drum Shaft (Front)(.968"OD)(Teflon) 1994-Up	1	
175178AR	Ring, ZF5HP19/FL/FLA Low/Reverse Clutch (Rubber) 1994-Up	2	
175179A	Ring, ZF5HP19/FL/FLA Stator (Reverse Clutch) 2.288"OD (Metal) 1994-Up	2	
175181A	Ring, ZF5HP19/FL/FLA Stator (Forward Clutch) 2.055"OD (Metal) 1994-Up	1	
175185AT	Ring, ZF5HP19/FL/FLA Overrun Clutch (2.155"OD)(Teflon) 1994-Up	2	

PART #	WASHERS & BEARINGS	QTY	REFERENCE #
175210A	Bearing W/Race, ZF5HP19/FL/FLA Stator To Reverse Drum (Beveled)(3.450"OD)(2.293"ID) 1994-Up	1	
175211AA	Shim, ZF5HP19/FL/FLA Stator To Reverse Drum (Selective)(2.830"OD)(2.405"ID) 1994-Up	1	
175213A	Race, ZF5HP19/FL/FLA 4th Clutch Drum To Hub (.039"Thick) (1.020"OD) 1994-Up (Also Fits ZF5HP19/FL/FLA Race #215 1994-Up)	2	
175214A	Bearing, ZF5HP19/FL/FLA 4th Clutch Drum To Hub (.078"Thick)(1.016"OD)(.475"ID) 1994-Up	1	
175215A	Use 175213A.	1	
175216A	Cupped Race, ZF5HP19/FL/FLA 4th Clutch Hub To Forward Hub (.170"Thick)(1.462"OD) (.880"ID) 1994-Up	1	
175217A	Bearing, ZF5HP19/FL/FLA 4th Clutch Hub To Forward Hub (.079" Thick)(1.362"OD)(.834"ID) 1994-Up	1	
175218A	Race, ZF5HP19/FL/FLA 4th Clutch Hub To Forward Hub (.039" Thick)(1.359"OD)(.882"OD) 1994-Up	1	
175219A	Cupped Race, ZF5HP19/FL/FLA Overdrive Direct Drum To Hub (2.338"OD)(1.503"ID) 1994-Up (Also Fits ZF5HP19/FL/FLA Overdrive Ring Gear Hub To Overdrive Planet #222 1994-Up) Also Fits ZF5HP19 Overdrive Sun Gear To Park Gear # 265 1997-Up)	1-2	
175220A	Bearing, ZF5HP19/FL/FLA Overdrive Direct Drum To Hub (.118" Thick)(2.232"OD)(1.461"ID) 1994-Up (Also Fits ZF5HP19/FL/FLA Overdrive Ring Gear Hub To Overdrive Planet #223 1994-Up)(Also Fits ZF5HP19 Overdrive Sun Gear To Park Gear # 264 1997-Up)	1-2	
175221A	Race, ZF5HP19/FL/FLA Overdrive Direct Drum To Hub (.039" Thick)(2.180"OD)(1.466"ID) 1994-Up (Also Fits ZF5HP19/FL/FLA Overdrive Ring Gear Hub To Overdrive Planet #224 1994-Up)(Also Fits ZF5HP19 Overdrive Sun Gear To Park Gear # 263 1997-Up)	1-2	
175222A	Use 175219A.	1	
175223A	Use 175220A.	1	
175224A	Use 175221A.	1	
175225A	Cupped Race, ZF5HP19/FL/FLA Overdrive Planet To Sun Gear (.200" Thick)(2.570"OD) (1.860"ID) 1994-Up	1	
175226A	Bearing, ZF5HP19/FL/FLA Overdrive Planet To Sun Gear (.117" Thick)(2.465"OD)(1.815"ID) 1994-Up	1	
175227A	Race, ZF5HP19/FL/FLA Overdrive Planet To Sun Gear (.035"/.240" Thick)(2.435"OD)(1.805"ID) 1994-Up	1	
175229A	Bearing W/Races, ZF5HP19/FL/FLA Reverse Drum To Forward Drum (.141" Thick)(2.975"OD) (2.295"ID) 1994-Up	1	
175230A	Race, ZF5HP19FL/FLA Overdrive Direct Drum Bushing (Front)(3 Outer Tabs)(.380" Thick) (2.280"ID) 1994-Up	1	
175233A	Caged Needle Bearing, ZF5HP19/FL/FLA Overdrive Direct Drum (Inner)(.270" Thick)(2.320"OD) 1994-Up	1	
175235A	Bearing W/Races, ZF5HP19/FL/FLA Forward Hub To Shell (.195" Thick)(1.955"OD)(1.216"ID) 1994-Up	1	
175250A	Race, ZF5HP19/FL/FLA Output Planet To Intermediate Shaft (.039" Thick)(1.930"OD)(1.181"ID) (Stepped) 1994-Up	1	
175251A	Bearing, ZF5HP19/FL/FLA Output Planet To Intemediate Shaft (.118" Thick)(1.917"OD)(1.266"ID) 1994-Up	1	
175252A	Race, ZF5HP19/FL/FLA Output Planet To Intermediate Shaft (.038" Thick)(2.027"OD)(1.340"ID) (Flat) 1994-Up	1	
175253A	Race, ZF5HP19/FL/FLA Intermediate Shaft To Low Sprag Inner Race (.038" Thick)(2.416"OD) (1.820"ID) 1994-Up	1	
175254A	Bearing, ZF5HP19/FL/FLA Intermediate Shaft To Low Sprag Inner Race (.118" Thick)(2.465"OD) (1.816"ID) 1994-Up	1	
175255A	Race, ZF5HP19/FL/FLA Intermediate Shaft To Low Sprag Inner Race (.040" Thick)(2.435"OD) (1.840"ID) (Stepped) 1994-Up	1	
175263A	Bearing W/Races, ZF5HP19FL/FLA Overdrive Sun Gear To Output Gear (.305" Thick)(2.040"OD) (1.305"ID) 1994-Up	1	
175263B	Use 175221A.	1	

© Whatever It Takes Transmission Parts. Inc.

175264A ..... Spacer, ZF5HP19FL/FLA Overdrive Sun Gear To Output Gear (.275" Thick)(1.810"OD)(1.250"ID) 1994-Up 1
175264B ..... Use 175220A 1
175265B ..... Use 175219A 1
175266B ..... Shim, ZF5HP19 Park Gear To Yoke Nut (.067" Thick)(1.650"OD)(1.340"ID) 1997-Up 1
175271B ..... Ball Bearing, ZF5HP19 Yoke To Extension Housing (16 Ball, Open Plastic Cage) 1997-Up 2
175272-1B ..... Inner Race Housing, ZF5HP19 Yoke To Extension Housing (.726" Thick)(2.203"OD)(1.650"ID) (Cast # SKF Italy BA2B833997AB) 1997-Up 1
175272AA ..... Shim, ZF5HP19FL/FLA Case To Drive Gear (Selective) 1994-Up 1
175272B ..... Outer Race, ZF5HP19 Yoke To Extension Housing (1.455" Thick)(2.955"OD) 1997-Up 2
175274A ..... Cone Bearing, ZF5HP19FL/FLA Pinion Shaft To Nut (XC2212CS) 1994-Up (19 Rollers) (1.620"ID) 1
175274AB ..... Cone Bearing, ZF5HP19FL/FLA Pinion Shaft To Race Assembly (XC09637CD) (18 Rollers) (1.620"ID) 1994-Up 1
175275A ..... Ball Bearing, ZF5HP19FL/FLA Axle Flange To Case (SKF 6007/C3)(2.442"OD)(1.375"ID) 1994-Up 1
175276AA ..... Shim, ZF5HP19FL/FLA Pinion (2.346"OD)(1.645"ID) 1994-Up 1
175277AA ..... Shim, ZF5HP19FL/FLA Driven Gear To Cup Race Retainer (Selective) 1994-Up 1
175278A ..... Cup Race, ZF5HP19FL/FLA Case To Drive Gear (2.995"OD) 1994-Up (Cast # LM503310/QCL7C SKF) Also Fits ZF5HP19FL/FLA Drive Gear To Cover 1994-Up 1-2
175279A ..... Cone Bearing, ZF5HP19FL Case To Drive Gear (1.819"ID) 1994-Up (Cast # LM503349/QCL7C SKF) Also Fits ZF5HP19FL/FLA Drive Gear To Cover 1994-Up 1-2
175279AB ..... Cone Bearing, ZF5HP19FLA (AWD) Drive Gear To Rear Cover (Cast # 32010X1Q SKF) 1994-Up 1
175280A ..... Cup Race, ZF5HP19FL/FLA Driven Gear (Both Sides) (LM503310) 1994-Up 2
175281A ..... Cone Bearing, ZF5HP19FL/FLA Driven Gear (Both Sides) (LM503349) 1994-Up 2
175282A ..... Cup Race, ZF5HP19FL/FLA Idler Gear (Both Sides) (LM48510) 1994-Up 2
175283A ..... Cone Bearing, ZF5HP19FL/FLA Idler Gear (Both Sides) (LM48548) 1994-Up 2
175284AA ..... Shim, ZF5HP19FL/FLA Case To Idler Gear (Selective) (2.542"OD) 1994-Up 1
175288A ..... Cup Race, ZF5HP19FL/FLA Differential To Cover (LM806610) 1994-Up 1
175289A ..... Cone Bearing, ZF5HP19FL/FLA Differential To Cover (LM806649) 1994-Up 1
175290AA ..... Shim, ZF5HP19FL/FLA Differential To Cover (3.477"OD) (Selective) 1994-Up 1
175291A ..... Cup Race, ZF5HP19FL/FLA Differential Bearing To Case (LM300811/Q) 1994-Up 1
175292A ..... Cone Bearing, ZF5HP19FL/FLA Differential To Case (LM300849/QCL7A) 1994-Up 1
175293AA ..... Shim, ZF5HP19FL/FLA Differential To Case (Selective) (2.664"OD) 1994-Up 1
175296AB ..... Ball Bearing, ZF5HP19FLA (AWD) Transfer Case Drive Gear (Front) 1994-Up 1
175297AB ..... Caged Needle Bearing, ZF5HP19FLA (AWD) Transfer Gear To Extention Housing (Cast # INA HK4016) (1.850"OD) 1994-Up 1
175298AB ..... Caged Needle Bearing, ZF5HP19FLA (AWD) Driven Transfer Case Gear (Front) (1.655"OD) (Cast # INA HK3516) 1994-Up 1
175299AB ..... Ball Bearing, ZF5HP19FLA (AWD) Driven Transfer Case Gear (3.545"OD) (Cast # SKF 6210/C3) 1994-Up 1

PART #	GASKETS & RUBBER COMPONENTS	QTY	REFERENCE #

175300A ..... Gasket, ZF5HP19FL/FLA (Audi/VW) Bottom Pan (Paper) 1994-Up 1
175300B ..... Gasket, ZF5HP19 (BMW) (RWD) Bottom Pan (Paper) 1997-Up 1
175309AK ..... Gasket, ZF5HP19/FL/FLA Pump Bolt Washer (9 Pieces) 1994-Up 9
175311A ..... O-Ring, ZF5HP19/FL/FLA Pump Body 1994-Up 1
175320B ..... Gasket, ZF5HP19 Valve Body (Main) 1997-04 1
175381A ..... O-Ring, ZF5HP19FL/FLA (Audi/VW) Stator Body 1994-Up 1
175381B ..... O-Ring, ZF5HP19 (BMW) Stator Body 1997-04 1
175385A ..... Seal, ZF5HP19FL/FLA Sealing Sleeve (Valve Body To Stator) 1994-Up 5
175386A ..... Seal, ZF5HP19FL/FLA (Goes Into Case Above Valve Body, For Low/Reverse & Overrun Clutch Housing) 1994-Up 3

PART #	TECHNICAL MANUALS	QTY	REFERENCE #

175400A ..... Repair Manual, ZF5HP19FL/FLA (FWD)(Audi/Volkswagen) 1
159400A-1 ..... Valve Body Manual, All ZF 5 Speeds 1
175400AFD ..... Manual, ZF5HP19FL/FLA (Audi) Function Description 1994-Up 1
175400B ..... Repair Manual, ZF5HP19 (BMW) RWD 1
175400BFD ..... Manual, ZF5HP19 (BMW) Function Description 1997-04 1

PART #	ELECTRICAL COMPONENTS	QTY	REFERENCE #

175410A ..... Switch, ZF5HP19FL/FLA PRNDL (2 Bolt) (9 Pin Square Connector) 1994-Up 1
175410AB ..... Switch, ZF5HP19FL/FLA PRNDL (2 Bolt) (8 Pin Round Connector) 1994-Up 1
175420A ..... Solenoid Kit, ZF5HP19/FL/FLA 1994-Up (Contains: 3 Shift, 4 EPC Solenoids With O-Rings) (ZF5HP19 Units Ending In 005/008/009/010)(ZF5HP19FL Units Ending In 049/059/072/088/106) (ZF5HP19FLA Units Ending In 030/035/044/053/054/063/065/073/075/087/093/100/101/103) 1

© Whatever It Takes Transmission Parts. Inc.

PART #	ELECTRICAL COMPONENTS (Continued)	QTY	REFERENCE #
185420A	Solenoid Kit, ZF5HP19FL (Units Ending In 030/050/053)	1	
175420B	Solenoid Kit, ZF5HP19FL/FLA 1994-Up (Contains: 3 Shift, 4 EPC Solenoids With O-Rings) (ZF5HP19FL Units Ending In 005/006/011/013/021/027)(ZF5HP19FLA Units Ending In 002/012 /013/018/036)	1	
175431A	Solenoid, ZF5HP19/FL/FLA EPC 1994-Up	1	
175436A	Sensor, ZF5HP19FL/FLA (Audi) Output Speed (On Outside Of The Case) 1994-Up	1	
179436A	Sensor, ZF5HP19 (All) Input Speed (Also Fits ZF5HP19FL Input Speed (Units Ending In 005/006/ 011/013/021/027)(Also Fits ZF5HP19FLA Input Speed Units Ending In 002/012/013/018/036)	2	
185436A	Sensor, ZF5HP19FL/FLA Output Speed (In The Speed-O Cover)	1	
175439A	Sensor, ZF5HP19/ZF5HP19FL/ZF5HP19FLA Turbine Shaft (Goes Through Valve Body) (ZF5HP19 (All), ZF5HP19FL Units Ending In 049/059/072/088, ZF5HP19FLA Units Ending In 030/035/044/053/054/063/065/073/075/087/093/100/101/103)	1	
175446A	Wire Harness, ZF5HP19FL/FLA (Internal w/Case Connector) 1994-Up (Fits 5HP19FL Ending In 049/059/072/088)(Fits 5HP19FLA End In 030/035/044/053/054/063/064/065/073/075/087/093/ 100/101/103)(TFT Sensor Included)	1	
175446AA	Wire Harness, ZF5HP19FL/ZF5HP19FLA (Internal With Case Connector) 1994-Up (Fits ZF5HP19FL Ending In 005/006/011/013/021/027)(Fits ZF5HP19FLA Ending In 002/012/013/018/036)(TFT Sensor Included)	1	
175446B	Wire Harness, ZF5HP19 (Internal W/16 Prong Case Connectors)(With 7 Yellow 2 Prong, 1 Brown 2 Prong, & 1 Black 2 Prong Connector) 1997-Up (TFT Sensor Included)	1	

PART #	MISCELLANEOUS PARTS	QTY	REFERENCE #
175492B	Drain Plug, ZF5HP19 (.660" Long)(1.100"OD Of Allen Head) 1997-Up	1	
175493B	Fill Plug, ZF5HP19 (.675" Long)(.945"OD Of Allen Head) 1997-Up	1	

PART #	HARD PARTS	QTY	REFERENCE #
175510A	Pump Body W/Gears, ZF5HP19FL/FLA (Cast # 1060 410 061) 1994-Up (14 Teeth Inner Gear) (.551" Thick)	1	
175510B	Pump Body W/Gears, ZF5HP19 (BMW) (Cast # 1060 410 017) 1997-Up	1	
175510BA	Pump Body W/Gears, ZF5HP19 (BMW) (Cast # 1060 610 014) 1997-Up	1	
175520A	Stator, ZF5HP19FL/FLA (Pump Cover) Aluminum (Cast # 1060 410 083)(Does Not Include #529 Shaft) 1994-Up	1	
175520B	Stator, ZF5HP19 (Pump Cover) Aluminum (Cast # 1060 410 078)(Does Not Include #529 Shaft) 1997-Up	1	
175529A	Stator Shaft, ZF5HP19FL/FLA (Cast # 1056 410 084) 1994-Up	1	
175529AA	Stator Shaft, ZF5HP19FL/FLA (Cast # 1056 410 118) 1994-Up	1	
175529AB	Stator Shaft, ZF5HP19FL/FLA (Cast # 1056 410 095) 1994-Up	1	
175529B	Stator Sahft, ZF5HP19 (Cast # 1056 410 096) 1997-Up	1	
175530A	Pump Gear Set, ZF5HP19/FL/FLA (.551" Thick)(14 Inner Teeth)(17 Outer Teeth)(2 Lugs) 1994-Up	1	
175540-1B	Valve, ZF5HP19 Flow Control (Aluminum)(2.350" Long)(.695"OD) 1997-Up	1	
175540-2B	Tube, ZF5HP19 Flow Control Valve (1.850" Long)(.550"OD)(9 Slots, 3 Fingers) 1997-Up	1	
175540-3B	Spring, ZF5HP19 Flow Control Valve (3.220" Long)(.648"OD) 1997-Up	1	
175540-7B	Tube, ZF5HP19 Valve Body To Pump Stator (1.402" Long)(Plastic)(Uses 2 O-Rings) 1997-Up	2	
175544A	Plate, ZF5HP19FL/FLA (Audi) Pump (Cast # 1060 310 091) 1994-Up	1	
175544B	Plate, ZF5HP19 (BMW) Pump (Cast # 1056 310 123) 1997-Up	1	

PART #	PUMP COMPONENTS	QTY	REFERENCE #
175507A-3	Pin, ZF5HP19/FL/FLA Pump Alignment (.315"OD)(.880" Long)(Hollow) 1994-Up	1	
175507B-2	Sleeve, ZF5HP19 (BMW) Pump Stator 1997-04	2	

PART #	HARD PARTS (Continued)	QTY	REFERENCE #
175546A	Apply Ring, ZF5HP19/FL/FLA Overdrive Direct Clutch (.460" Thick)(5.285"OD)(4.685"ID)(Steel) 1994-Up	1	
175550A	Drum W/Shaft, ZF5HP19/FL/FLA 4th Clutch (Stamped Steel) (5 Clutch) (10 1/4" Overall Length) 1994-Up	1	
175551A	Drum, ZF5HP19/FL/FLA Overdrive Direct Clutch (With Internal Bearing) 1994-Up (ZF5HP19 Units Ending In 005/009/010)(ZF5HP19FL Units Ending In 005/006/011/ 021/027/059/088)(ZF5HP19FLA Units Ending In 002/012/013/035/036/044/058/063/065/ 075/087/093/100/103)	1	
175551AA	Drum, ZF5HP19/FL/FLA Overdrive Direct Clutch (With Internal Bearing) 1994-Up (ZF5HP19 Units Ending In 008)(ZF5HP19FL Units Ending In 013/049/072) (ZF5HP19FLA Units Ending In 018/030/054/073/101)	1	

© Whatever It Takes Transmission Parts. Inc.

175551AB.....Drum, ZF5HP19FL/FLA Overdrive Direct Clutch (With Internal Bushing)(4 Clutch)(Snap Ring Is .460" From Top)(Cast # 1056 477 040) 1994-Up.....1
175551AC.....Drum, ZF5HP19FL/FLA Overdrive Direct Clutch (With Internal Bushing)(5 Clutch)(Snap Ring Is .275" From Top)(Cast # 1056 477 040) 1994-Up.....1
175552A.....Housing, ZF5HP19FL/FLA Intermediate Clutch (Cast # 1060 410 104) 1994-Up (.290" From Top Of Snap Ring Groove To Top Of Housing).....1
175552AA.....Housing, ZF5HP19FL/FLA Intermediate Clutch (Cast # 1060 410 104) 1994-Up (.140" From Top Of Snap Ring Groove To Top Of Housing).....1
175552AB.....Housing, ZF5HP19FL/FLA Intermediate Clutch (Cast # 1056 410 109) 1994-Up.....1
175552B.....Housing, ZF5HP19 Intermediate Clutch (Cast # 1060 410 068) 1997-Up.....1
175554A.....Drum, ZF5HP19FL/FLA Forward Clutch (5 Clutch) (Cast # 1060 470 031) Aluminum (Without A Magnetic Strip Around The Drum) 1994-Up (From The Edge Of Drum To Snap Ring Groove Is .150").....1
175554A-1.....Drum, ZF5HP19FL/FLA Forward Clutch (4 Clutch)(Cast # 1060 470 031) Aluminum (Without A Magnetic Strip Around The Drum) 1994-Up (From The Edge Of Drum To Snap Ring Groove Is .300").....1
175554AA.....Drum, ZF5HP19/FL/FLA Forward Clutch (5 Clutch) (Cast # 1060 470 043) Aluminum (With A Magnetic Strip Around The OD Of The Drum) 1994-Up (From The Edge Of Drum To Snap Ring Groove Is .150").....1
175554AA-1....Drum, ZF5HP19/FL/FLA Forward Clutch (5 Clutch) (Cast # 1060 470 043) Aluminum (With A Magnetic Strip Around The OD Of The Drum) 1994-Up (From The Edge Of Drum To Snap Ring Groove Is .300").....1
175556A.....Drum, ZF5HP19FL/FLA Reverse Clutch (Stamped Steel) (2 Clutch) 1994-Up.....1
175558A.....Housing, ZF5HP19FL/FLA (Audi) Low/Reverse & Overrun Clutch (D&G) 1994-Up (ZF4HP19FL Units Ending In 005/006/011/021/027)(ZF5HP19FLA Units Ending In 002/012/013/036)(From The Edge Of Drum To Snap Ring Groove On Overrun Side Is .180") (No Threaded Holes)(Uses Keyways On OD).....1
179558A.....Drum, ZF5HP19 (BMW) Low/Reverse & Overrun Clutch 1995-Up (For Units Ending In 005/009/010)(With 3 Threaded Bolt Holes)(Overrun Side Snap Ring Groove Is .180" Down).....1
175558AA.....Housing, ZF5HP19FL/FLA (Audi) Low/Reverse & Overrun Clutch (D & G) 1994-Up (ZF5HP19FL Units Ending In 013/049/072)(ZF5HP19FLA Units Ending In 018/030/054/073/101) (From The Edge Of Drum To Snap Ring Groove On Overrun Side Is .285")(2 Keyways).....1
175558AB.....Housing, ZF5HP19FL/FLA (Audi) Low/Reverse & Overrun Clutch (D&G) 1994-Up (ZF5HP19FL Units Ending In 059/088)(ZF5HP19FLA Units Ending In 035/044/053/063/065/075 087/093/100/103)(From The Edge Of Drum To Snap Ring Groove On Overrun Side Is .140") (From The Edge Of Drum To Snap Ring Groove On Low/Reverse Side Is .245")(2 Keyways).....1
175558AC.....Housing, ZF5HP19FL/FLA (Audi) Low/REverse & Overrun Clutch (D & G) 1994-Up (From The Edge Of Drum To Snap Ring Groove On Overrun Side Is .140")(From The Edge Of Drum To Snap Ring Groove On Low/Reverse Side Is .380").....1
175560A.....Piston Kit, ZF5HP19/FL/FLA 4th Clutch (Cast # 1056 471 061C) 1994-Up.....1
175561A.....Piston Kit, ZF5HP19/FL/FLA Overdrive Direct Clutch (Cast # 1056 477 038)(4 Pieces) 1994-Up.....1
175562A.....Piston Kit, ZF5HP19/FL/FLA Intermediate Clutch (Cast # 1056 410 081) 1994-Up.....1
175564A.....Piston Kit, ZF5HP19/FL/FLA Forward Clutch (Cast # 1056 470 050) 1994-Up.....1
175566A.....Piston Kit, ZF5HP19/FL/FLA Reverse Clutch (Cast # 1060 472) 1994-Up.....1
175567A.....Piston Kit, ZF5HP19/FL/FLA Low/Reverse Clutch (Piston Cast # 1050 417 050)(3 Pieces) 1994-Up.....1
175568A.....Piston Kit, ZF5HP19/FL/FLA Overrun Clutch (Cast # 1060 473 013) (4 Pieces) 1994-Up.....1
175570A.....Hub W/Shaft, ZF5HP19/FL/FLA 4th Clutch (36 Teeth Hub) (5.025" Long) 1994-Up.....1
175574A.....Clutch Hub, ZF5HP19/FL/FLA Forward Clutch (30 Teeth Hub) (3.275" Long) (5.100"OD) 1994-Up.....1
175580A.....Planet, ZF5HP19FL (2WD) Overdrive (6 1/16" Long) (1 Groove On Each Gear) 1994-Up.....1
175580AB.....Planet, ZF5HP19FLA (AWD) Overdrive (10 3/4" Long)(1 Groove On Each Gear) 1994-Up.....1
175580B.....Planet, ZF5HP19 (2WD) Overdrive (6 1/8" Long) (1 Groove On Each Gear) (With Snap Ring Groove In Splines) 1997-Up.....1
175584A.....Planet, ZF5HP19FL/FLA Output (Uses A 34 Teeth Sun Gear) (16 Lugs On Outer Diameter) (6 Gear With 2 Grooves Each) 1994-Up.....1
175584AA.....Planet, ZF5HP19/FLA Output (Uses A 34 Teeth Sun Gear)(16 Lug On Outer Diameter)(6 Gear With 1 Narrow Groove On Short Gear & With 2 Narrow & 1 Wide Groove On Tall Gears).....1
175584B.....Planet, ZF5HP19 Output (Uses A 34 Teeth Sun Gear)(16 Lugs On Outer Diameter)(6 Gear With 1 Groove On Each) 1997-Up.....1
175590A.....Ring Gear, ZF5HP19FL/FLA Overdrive Planet (76 Teeth) (30 Lugs) 1994-Up.....1
175594A.....Ring Gear, ZF5HP19FL/FLA Output Planet (98 Teeth) (18 Lugs) (With 3 Identification Rings On The Outside Diameter) 1994-Up.....1
175594B.....Ring Gear, ZF5HP19 Output Planet (98 Teeth)(18 Lugs)(With 1 Identification Ring On The Outside Diameter) 1997-Up.....1
175600A.....Hub, ZF5HP19FL/FLA Overdrive Ring Gear (1.703" Thick) 1994-Up.....1
175610A.....Sun Gear, ZF5HP19/FL/FLA Overdrive (32 Teeth) With 24 Lug Hub 1994-Up.....1

© Whatever It Takes Transmission Parts. Inc.

PART #	SPRAGS & ONE WAY CLUTCHES	QTY	REFERENCE #
175624A	Shell, ZF5HP19FL/FLA (With 34 Teeth, 2 Groove Sun Gear)(24 Drive Lugs)(Non-Ferrous Metal, Non-Magnetic)(Uses Hall Effect Sensor) 1994-Up	1	

PART #	HARD PARTS (Continued)	QTY	REFERENCE #
175624AA	Shell, ZF5HP19FL/FLA (With 34 Teeth, No Groove Sun Gear)(24 Drive Lugs)(Ferrous Metal, Magnetic)(Uses Pulse Generator) 1994-Up	1	
175624AB	Shell, ZF5HP19FL/FLA (With 34 Teeth, 3 Groove Sun Gear)(24 Drive Lugs)(Ferrous Metal, Magnetic)(Uses Pulse Generator) 1994-Up	1	
175624B	Shell, ZF5HP19 (34 Teeth, 1 Groove Sun Gear)(24 Drive Lugs)(Non-Ferrous Metal, Non-Magnetic)(Uses Hall Effect Sensor) 1997-Up	1	
175626A	Shell, ZF5HP19/FL/FLA Connecting (Cast # 1050 417 060) Aluminum (2.057" Thick) (No Reluctor) 1994-Up	1	
175626AA	Shell, ZF5HP19FL/FLA Connecting (Cast # 1056 432 084) Aluminum (2.057" Thick) (With Reluctor Or Built In Pulse Generator)	1	
175639A	Key, ZF5HP19FL/FLA Low/Reverse & Overrun Clutch Housing 1994-Up	2	
175644A	Sprag Assembly, ZF5HP19FL/FLA Low Sprag With Outer Race 1994-Up (ZF5HP19FL Units Ending In 005/006/011/013/021/027)(ZF5HP19FLA Units Ending In 002/012/013/018/036)	1	
175644AA	Sprag Assembly, ZF5HP19/FL/FLA Low Sprag With Outer Race 1994-Up (ZF5HP19 All) (ZF5HP19FL Units Ending In 049/059/072/088)(ZF5HP19FLA Units Ending In 030/035/044/053/ 054/063/073/075/087/093/100/101/103)	1	
175658A	Sprag, ZF5HP19/FL/FLA Low (34 Elements, .505" Thick) (Plastic Cage) 1994-Up (Can Use 175644A Or 175644AA)	1	
175664A	Race, ZF5HP19/FL/FLA Low Sprag (Inner)(3.900" Long) 1994-Up (Used With Bearing Type Drum #551)	1	
175664AA	Race, ZF5HP19FL/FLA Low Sprag (Inner)(3.900" Long) 1994-Up (Used With Bushing Type Drum #551)	1	
175674A	Intermediate Shaft, ZF5HP19/FL/FLA (18 Lugs)(4 3/8" Tall) 1994-Up	1	
175685A	Park Gear, ZF5HP19FL/FLA (12 Lugs, 27 Teeth Reluctor) 1994-Up	1	
175685B	Park Gear, ZF5HP19 (16 Lugs)(36 Teeth Reluctor)(1.900" Thick) 1997-Up	1	
175695A	Spacer Ring, ZF5HP19FL/FLA Ring Gear To Intermediate Shaft (.079"Thick)(Early Models Only)	1	
175696A	Crush Sleeve, ZF5HP19FL/FLA Pinion (.706" Thick) 1994-Up	1	
175698AB	Bracket, ZF5HP19FLA (AWD) Holds Flange Plate To Extention Housing 1994-Up	1	
175698AC	Retainer, ZF5HP19FLA (AWD) Driven Transfer Gear (W/Threaded Center Hole) (With Flange) 1994-Up	1	
175699B	Disc, ZF5HP19/FL/FLA Front Seal (.085" Thick)(1.775"ID) 1997-Up	1	
175707AB	Drive Gear, ZF5HP19FLA (AWD) Transfer (41 Teeth) (5.110" Long) 1994-Up	1	
175708AB	Driven Gear, ZF5HP19FLA (AWD) Transfer Case (37 Teeth) 1994-Up	1	
175710A	Gear, ZF5HP19FL (2WD) Drive Transfer (35 Teeth) 1994-Up	1	
175710AB	Gear, ZF5HP19FLA (AWD) Drive Transfer (20 Teeth) 1994-Up	1	
175712A	Gear, ZF5HP19FL/FLA Driven Transfer (35 Teeth, 3.740" Long) 1994-Up	1	
175714A	Gear, ZF5HP19FL/FLA Idler (41 Teeth, 3.485" Long) 1994-Up	1	
175716A	Housing, ZF5HP19FL/FLA Differential (12 Bolt) 1994-Up	1	
175719AB	Torsen 2 Assembly, ZF5HP19FLA (AWD) (3 Sets Of ID Splines) 1994-Up	1	
175720A	Ring Gear, ZF5HP19FL (2WD) Differential (34 Teeth, 12 Bolts) 1994-Up	1	
175720AB	Ring Gear, ZF5HP19FLA (AWD) Differential (32 Teeth, 12 Bolts) 1994-Up	1	
175724A	Oil Deflector, ZF5HP19FL/FLA Differential (Tin) (7 7/16"OD) 1994-Up	1	
175730A	Pinion, ZF5HP19FL (2WD) Shaft (10 Teeth) (14 1/2" Long) 1994-Up	1	
175730AB	Pinion, ZF5HP19FLA (AWD) Shaft (11 Teeth) (14 1/2" Long) 1994-Up	1	
175735A	Race Assembly, ZF5HP19FL/FLA Pinion Bearing Retainer (Bearing Races Are Made Into The Retainer) 1994-Up	1	
175736A	Retainer, ZF5HP19FL/FLA Driven Cup Race (Aluminum, 3.940"OD) 1994-Up	1	
175737A	Spring, ZF5HP19FL/FLA Park Gear To Aluminum Retainer (1.695"OD) 1994-Up	1	
175740A	Valve Body, ZF5HP19FL/FLA (7 Solenoids, 1 Blue, 3 Green & 3 Black) 1994-Up	1	
175740AA	Valve Body, ZF5HP19FL/FLA (7 Solenoids, 1 Yellow, 3 Green & 3 Black)(Uses 1 Large Tube #540-7 Vavle Body To Stator)1994-Up	1	
175740AB	Valve Body, ZF5HP19FL/FLA (7 Solenoids, 4 Black & 3 Brown) 1994-Up	1	
175740B	Valve Body, ZF5HP19 (BMW) (7 Solenoids, 1 Yellow, 3 Green & 3 Black)(Uses 2 Large Tubes #540-7 Valve Body To Stator) 1994-Up	1	

PART #	VALVE BODY COMPONENTS	QTY	REFERENCE #
S175741AAAK	Valve Kit, ZF5HP19/FL/FLA Oversize Pressure Reduction (Contains: Valve & Spring)(Sonnax) (Must Use T-F-85755-TL9)	1	
T-F-85755-TL9	Tool For S175741AAAK	1	
S175741AAP-OS	Valve, ZF5HP19 Pressure Regulator (Oversize) Late (E18.2) Valve Body (Requires T-F-85755-TL2 And T-VB-FIX)	1	
T-F-85755-TL2	Reamer Kit For S1757441AAP-OS (Contains: Reamer, Jig & Guide Pin)	1	

© Whatever It Takes Transmission Parts. Inc.

S175741ACA-1	Valve, ZF5HP19/FL/FLA Oversize TCC (Sonnax)(Must Use T-F-85755-TL8)	1	
T-F-85755-TL8	Tool For S175741ACA-1	1	
S175741AP-OS	Valve, ZF5HP19 Pressure Regulator (Oversize) Early (E17) Valve Body (Requires T-F-85755-TL1 & T-VB-FIX)	1	
T-F-85755-TL1	Reamer Kit For S175741AP-OS (Contains: Reamer, Jig & Guide Pin)	1	
175741APK	Pressure Regulator Valve Kit, ZF5HP19 (Contains: Valve, Spring, Spacer & Rings)(Transgo)	1	
175748AK	Spring Set, ZF5HP19FL/FLA (3 Springs, 3 Seals & 3 Snap Rings) Goes Into Case Above Valve Body, For Low/Reverse & Overrun Clutch) 1994-Up	1	

PART #	HARD PARTS (Continued)	QTY	REFERENCE #
175758A	Cover, ZF5HP19FL/FLA Differential (Aluminum, 12 Bolt) (Cast # 1060 435 079) 1994-Up (With Drain Plug)	1	
175759A	Rear Cover, ZF5HP19FL (2WD) (No Vent) 1994-Up	1	
175759AB	Cover, ZF5HP19FLA (AWD) Transfer Gear (With Vent) 1994-Up	1	
175760A	Case, ZF5HP19FL/FLA (27 Pan Bolts) 1994-Up	1	
175760B	Case, ZF5HP19 (BMW) (22 3/4" Long) 1997-Up	1	
175765A	Pan, ZF5HP19FL/FLA Bottom (27 Bolt, With 2 Plugs) 1994-Up	1	
175765B	Pan, ZF5HP19 (BMW) Bottom (22 Bolt) 1997-Up	1	
175770AB	Extention Housing, ZF5HP19FLA (AWD) (Aluminum, 8 1/4" Long) 1994-Up	1	
175770B	Extension Housing, ZF5HP19 (2WD) (2.682" Long)(7 Bolts To Case) 1997-Up	1	
175771AB	Rear Seal Housing, ZF5HP19FLA (AWD) (Aluminum, 4 Bolt) 1994-Up	1	
175774A	Retainer, ZF5HP19FL/FLA Axle Seal (Aluminum, 3 Bolts To Case) 1994-Up	1	
175777AK	Bolt Set, ZF5HP19FL/FLA Holds Pump Housing To Case (9 Pieces) 1994-Up	1	
175777BK	Bolt Set, ZF5HP19 Pump Housing To Case (9 Pieces) 1994-Up	1	
175778-1AK	Bolt Set, ZF5HP19FL/FLA Stator Shaft To Cover (7 Pieces) 1994-Up	1	
175778-1BK	Bolt Set, ZF5HP19 Stator To Pump Cover (7 Pieces) 1997-Up	1	
175778AK	Bolt Set, ZF5HP19FL/FLA Pump Body To Pump Cover (8 Pieces) 1994-Up	1	
175778BK	Bolt Set, ZF5HP19Pump Body To Pump Cover (8 Pieces) 1997-Up	1	
175779AK	Bolt Set, ZF5HP19FL/FLA Holds Pan To Case (27 Pieces) 1994-Up	1	
175780AK	Bolt Set, ZF5HP19FL (2WD) Holds Rear Cover To Case (14 Pieces) 1994-Up	1	
175780ABK	Bolt Set, ZF5HP19FLA (AWD) Extention Housing To Rear Cover (11 Pieces) 1994-Up	1	
175781BK	Bolt Set, ZF5HP19 Extension Housing To Case (7 Pieces) 1997-Up	1	
175782AK	Bolt Set, ZF5HP19FL/FLA Holds Valve Body To Case (16 Pieces) 1994-Up	1	
175782BK	Bolt Set, ZF5HP19 Valve Body To Case (14 Pieces) 1997-Up	1	
175783AK	Bolt Set, ZF5HP19FL/FLA Holds Intermediate Housing To Stator (3 Pieces) 1994-Up	1	
175783BK	Bolt Set, ZF5HP19 Holds Intermediate Housing To Stator (2 Pieces) 1997-Up	1	
175784AK	Bolt Set, ZF5HP19FLA (AWD) Holds Flange Plate To Extension Housing (5 Pieces) 1994-Up	1	
175785AK	Bolt Set, ZF5HP19FL/FLA Holds Differential Cover To Case (12 Pieces) 1994-Up	1	
175786AK	Bolt Set, ZF5HP19FL/FLA Differential Ring Gear (12 Pieces) 1994-Up	1	
175787A	Bolt, ZF5HP19FL/FLA Holds Pinion Retainer (#735) In Case 1994-Up	1	
175788BK	Bolt Set, ZF5HP19 Low/Reverse & Overrun Clutch Housing To Case (3 Pieces) 1997-Up	1	
175790ABK	Bolt Set, ZF5HP19FLA (AWD) Extention Housing To Transfer Gear Cover (4 Pieces) 1994-Up	1	
175793AK	Bolt Set, ZF5HP19FL/FLA Holds Oil Deflector To Differential Cover (3 Pieces) 1994-Up	1	
175795B	Nut, ZF5HP19 Holds Yoke To Extension Housing (.528" Thick)(1.520"ID)(With 4 Notches) 1997-Up	1	
175796A	Nut, ZF5HP19 Pinion (2.200"OD) (1.515"ID) (4 Holes) 1995-Up	1	
175798AB	Bolt, ZF5HP19FLA (AWD) Flange (Yoke) (2 11/16" Long) 1994-Up	1	
175820AB	Flange Plate, ZF5HP19FLA (AWD) (5 Bolt)(.120" Thick) 1994-Up	1	
175838A	Axle Flange, ZF5HP19FL/FLA Drivers Side (14 3/8" Long) 1994-Up	1	
175838AB	Axle Flange, ZF5HP19FL/FLA Passengers Side (3 1/8" Long) 1994-Up	1	
175841AB	Flange, ZF5HP19FLA (Audi)(AWD)(Yoke) Rear 1994-Up	1	
175841B	Yoke, ZF5HP19 (BMW)(2WD) Rear (5.155" Long)(Threaded On Front)(3 Bolt) 1997-Up	1	
175843B	Clip, ZF5HP19 Holds Wire Harness Case Connector To Case (1.565" Tall)(1.705" Wide) (1.173"ID) 1997-Up	1	
175845A	Spacer, ZF5HP19FL/FLA Axle Seal To Bearing (Plastic) (Cast # 0501 315 012) 1994-Up	1	
175861AA	Snap Ring, ZF5HP19FL/FLA Holds 4th Clutch Pressure Plate In (Selective)(3.070"ID) 1994-Up	1	
175862A	Snap Ring, ZF5HP19/FL/FLA Holds 4th Clutch Retainer In Drum (.067" Thick)(1.655"OD) (With 2 Eyelets) 1994-Up	1	
173863A	Snap Ring, ZF5HP19FL/FLA Holds Race #230 To Overdrive Direct Drum (.057" Thick) (2.870"OD) 1994-Up	1	
175864A	Use 175870	1	
175868A	Snap Ring, ZF5HP19/FL/FLA Holds Overdrive Direct Hub To Ring Gear (.057" Thick) (4.268"OD) 1994-Up	1	
175870AA	Snap Ring, ZF5HP19FL/FLA Holds Overrun Clutch Pressure Plate In (Selective) (5.780"OD) 1994-Up (Also Fits ZF5HP19/FL/FLA Overdrive Direct Clutch #864 1994-Up)	1	
175871A	Snap Ring, ZF5HP19/FL/FLA Holds Overrun Clutch Retainer In (.064"Thick)(2.475"OD) 1994-Up	1	
175873AA	Snap Ring, ZF5HP19/FL/FLA Holds Intermediate Pressure Plate In (Selective) 1994-Up	1	
175876AA	Snap Ring, ZF5HP19/FL/FLA Holds Forward Pressure Plate In (Selective)(6 5/16"OD) 1994-Up.	1	

© Whatever It Takes Transmission Parts. Inc.

PART #	HARD PARTS (Continued)	QTY	REFERENCE #
175881A	Snap Ring, ZF5HP19/FL/FLA Holds Forward Drum To 4th Drum (.058” Thick)(1.700”OD) (With 2 Eyelets) 1994-Up	1	
175883A	Snap Ring, ZF5HP19FL/FLA Holds Connecting Drum # 626 In Case (.108” Thick)(6 11/16”OD) Beveled (W/2 Eyelets) 1994-Up	1	
175885AA	Snap Ring, ZF5HP19/FL/FLA Holds Low/Reverse Clutch Pressure Plate In (Selective) (6 5/16”OD) 1994-Up	1	
175889A	Snap Ring, ZF5HP19/FL/FLA Holds Ring Gear To Intermediate Shaft (.062” Thick)(5.645”OD) 1994-Up	1	
175892AA	Snap Ring, ZF5HP19/FL/FLA Holds Reverse Clutch Pressure Plate In (Selective) (6 1/2”OD) 1994-Up	1	
175893A	Snap Ring, ZF5HP19FL/FLA Holds Ball Bearing On Axle Flange Shaft 1994-Up	1	
175895AB	Snap Ring, ZF5HP19FLA (AWD) Holds Bearing To Transfer Case Drive Gear (.077” Thick) (W/2 Eyelets) 1994-Up	1	
175895B	Snap Ring, ZF5HP19 Holds Park Gear To Overdrive Planet Shaft (.057” Thick)(1.285”OD) 1997-Up	1	
175896AB	Snap Ring, ZF5HP19FLA (AWD) Holds Bearing To Driven Transfer Gear (.116” Thick) (W/2 Eyelets) 1994-Up	1	
175897A	Snap Ring, ZF5HP19FL/FLA Holds Pinion Retainer In Case 1994-Up (W/2 Eyelets)	1	
175897AB	Snap Ring, ZF5HP19FLA (AWD) Holds Ball Bearing To Extention Housing 1994-Up	1	
175897B	Snap Ring, Holds Ball Bearing #271 To Extension Housing (.096” Thick)(3.145”OD) (With 2 Eyelets) 1994-Up	1	
175898AB	Snap Ring, ZF5HP19FLA (AWD) Holds Drive Transfer Case Gear Bearing (Rear) In Extention Housing (.056” Thick) 1994-Up	1	
175899AB	Snap Ring, ZF5HP19FLA (AWD) Holds Driven Transfer Case Gear Bearing (Front) In Extention Housing (.056” Thick) 1994-Up	1	
175960A	Piston, ZF5HP19/FL/FLA 4th Clutch (Aluminum) (Cast # 1056 471 061C) 1994-Up	1	
175961A	Piston, ZF5HP19/FL/FLA Overdrive Direct Clutch (Cast # 1056 477 038) 1994-Up	1	
175962A	Piston, ZF5HP19/FL/FLA Intermediate Clutch (Cast # 1056 410 081) 1994-Up	1	
175964A	Piston, ZF5HP19/FL/FLA Forward Clutch (Aluminum) (Cast # 1056 470 050) (8 Oval Holes) 1994-Up	1	
175966A	Piston, ZF5HP19/FL/FLA Reverse Clutch (Cast # 1060 472) (Aluminum) 1994-Up	1	
175967A	Piston, ZF5HP19/FL/FLA Low/Reverse Clutch (Cast # 1050 417 050) (Aluminum) 1994-Up	1	
175968A	Piston, ZF5HP19/FL/FLA Overrun Clutch (Cast # 1060 473 013) (Aluminum) 1994-Up	1	
175970A	Spring, ZF5HP19/FL/FLA 4th Clutch Return (.060” Thick) (8 Fingers) (3.550”OD) 1994-Up	1	
175971A	Spring, ZF5HP19/FL/FLA Overdrive Direct Clutch Return (.060” Thick)(4.680”OD)(Beveled) (12 Fingers) 1994-Up	1	
175972A	Spring, ZF5HP19/FL/FLA Intermediate Clutch Return (Beveled) (12 Fingers) (.058” Thick) (5.163”OD) 1994-Up	1	
175974A	Spring, ZF5HP19/FL/FLA Forward Clutch Return (.058” Thick)(4.270”OD)(12 Fingers) (Beveled) 1994-Up	1	
175976A	Spring, ZF5HP19/FL/FLA Reverse Clutch Return (Beveled) (14 Fingers) 1994-Up	1	
175977A	Spring, ZF5HP19/FL/FLA Low/Reverse Clutch Return (Beveled) (18 Fingers)(.066” Thick) 1994-Up	1	
175978A	Spring, ZF5HP19/FL/FLA Overrun Clutch Return (Beveled) (12 Fingers)(.073” Thick) 1994-Up	1	
175980A	Retainer, ZF5HP19/FL/FLA 4th Clutch Spring (.475” Thick)(3.880”OD)(Steel) 1994-Up	1	
175981A	Clip Set, ZF5HP19 FL/FLA Holds Overdrive Direct Clutch Return Spring In (.180” Thick) (2 Pieces) 1994-Up	1	
175982A	Use 175986A.	1	
175984A	Clip Set, ZF5HP19/FL/FLA Holds Forward Clutch Return Spring In (2 Pieces) 1994-Up	1	
175986A	Clip Set, ZF5HP19/FL/FLA Holds Reverse Clutch Return Spring In (2 Pieces) 1994-Up (Also Fits ZF5HP19/FL/FLA Holds Intermediate Clutch Return Spring In (#982)(2 Pieces) 1994-Up)	1-2	
175987A	Retainer, ZF5HP19/FL/FLA Low/Reverse Clutch Spring (.079” Thick)(3.820”OD)(2.495”ID) (3 Tabs) 1994-Up	1	
175988A	Retainer, ZF5HP19/FL/FLA Overrun Clutch Spring (W/3 Inner Tabs)(3.230”OD) 1994-Up	1	
175991-2B	Spring, ZF5HP19 Rooster Comb Detent (3.683” Long)(2 Bolt) 1997-Up	1	
175991-3B	Rooster Comb, ZF5HP19 (.545” Thick)(.395”ID Hole)(7 Detents) 1997-Up	1	
175991-4B	Manual Shaft Rod, ZF5HP19 (3.595” LOng)(.393”OD) 1997-Up	1	
175991-5B	Roll Pin, ZF5HP19 Holds Manual Shaft To Rooster Comb (.880” Long)(.202”OD) 1997-Up	1	
175994B	Park Rod Actuator, ZF5HP19 (9” Long) 1997-Up	1	
175995A	Park Pawl Assembly, ZF5HP19FL/FLA (3 Pieces) 1994-Up	1	
175995B	Park Pawl Assembly, ZF5HP19 (5 Pieces) 1997-Up	1	
175999A	Oil Tube, ZF5HP19FL/FLA Pinion (4 3/4” Long) 1994-Up	1	

© Whatever It Takes Transmission Parts. Inc.

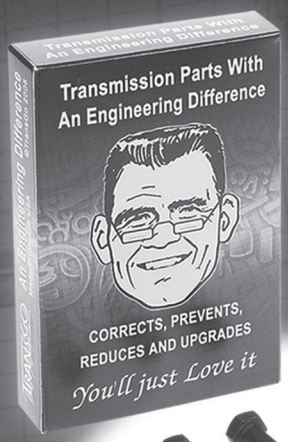

5HP-19-PR

Pressure Regulator Repair

Corrects/Prevents/Reduces:

Extreme Pressure Damage Due To Worn PR Bore, Harsh Shifts, Kick-Down Bang, Drum Breakage.

Patent Pending



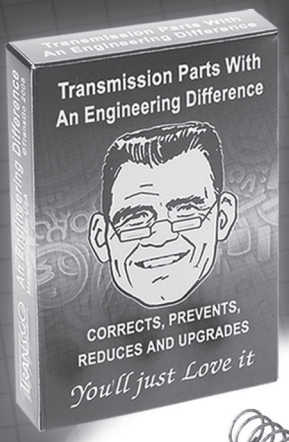

SK® VW-01M

Corrects/Prevents/Reduces:

Kills Engine, Rough Lockup, Soft 1-2, 2-3 Cutloose, Excessive or Runaway Pressure. Solves worn Pressure Regulator Bore issue without Tools.

Fits:

1995-2004 Volkswagen 0IM

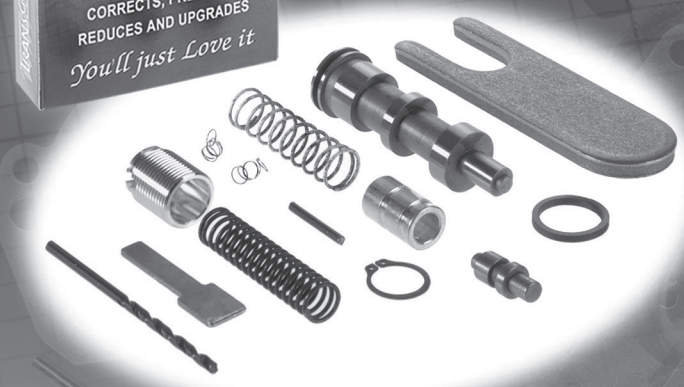

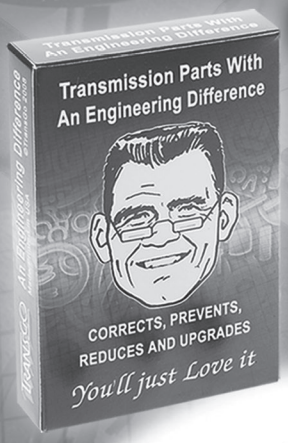

5HP-24-PR

Pressure Regulator Repair

Corrects/Prevents/Reduces:

Runaway Pressure, Harsh Shifts, Kick-Down Bang, Drum Breakage.

Fits:

ZF5HP-24 Equipped Audi, BMW, Jaguar and Range Rover Vehicles.

No special tools required!

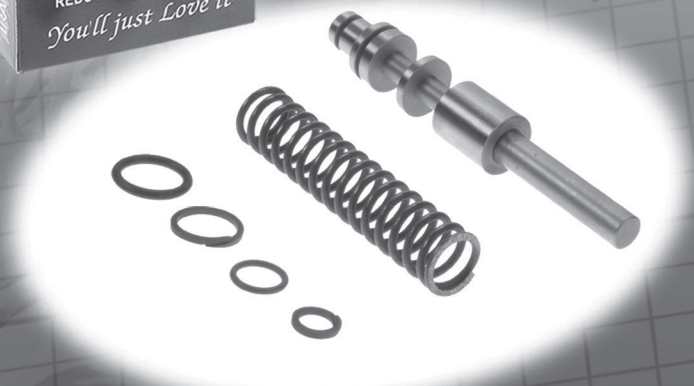

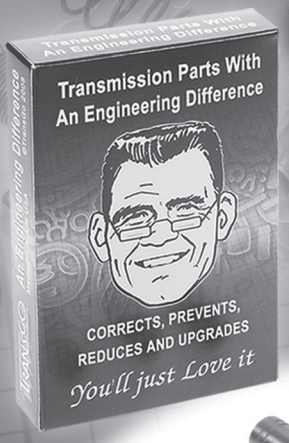

SK® 4F27E

Corrects/Prevents/Reduces:

Wrong gear starts. No 2nd gear, Skips 2nd. KD Neutrals at speed, TCC Slip Codes.

Fits:

2000-2010 4speed Ford 4F27E & Mazda FN4A-EL

2006-2010 5speed Ford FNR5 & Mazda FS5A-EL

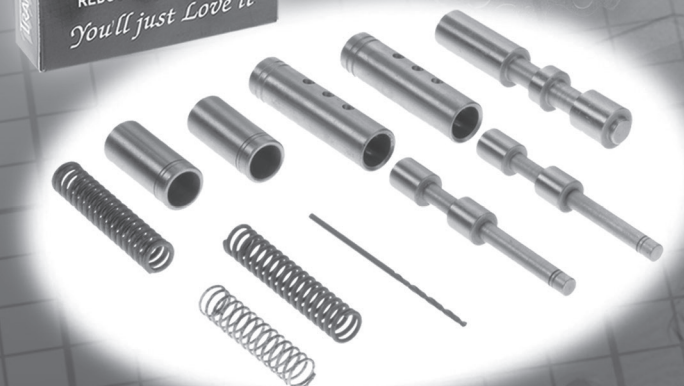

It just ain't FIXED *without it!*

TRANSGO®

Product Support

626-443-7451

Visit: transgo.com

Mr. Shift®



ZF5HP24

RWD/AWD 5 Speed

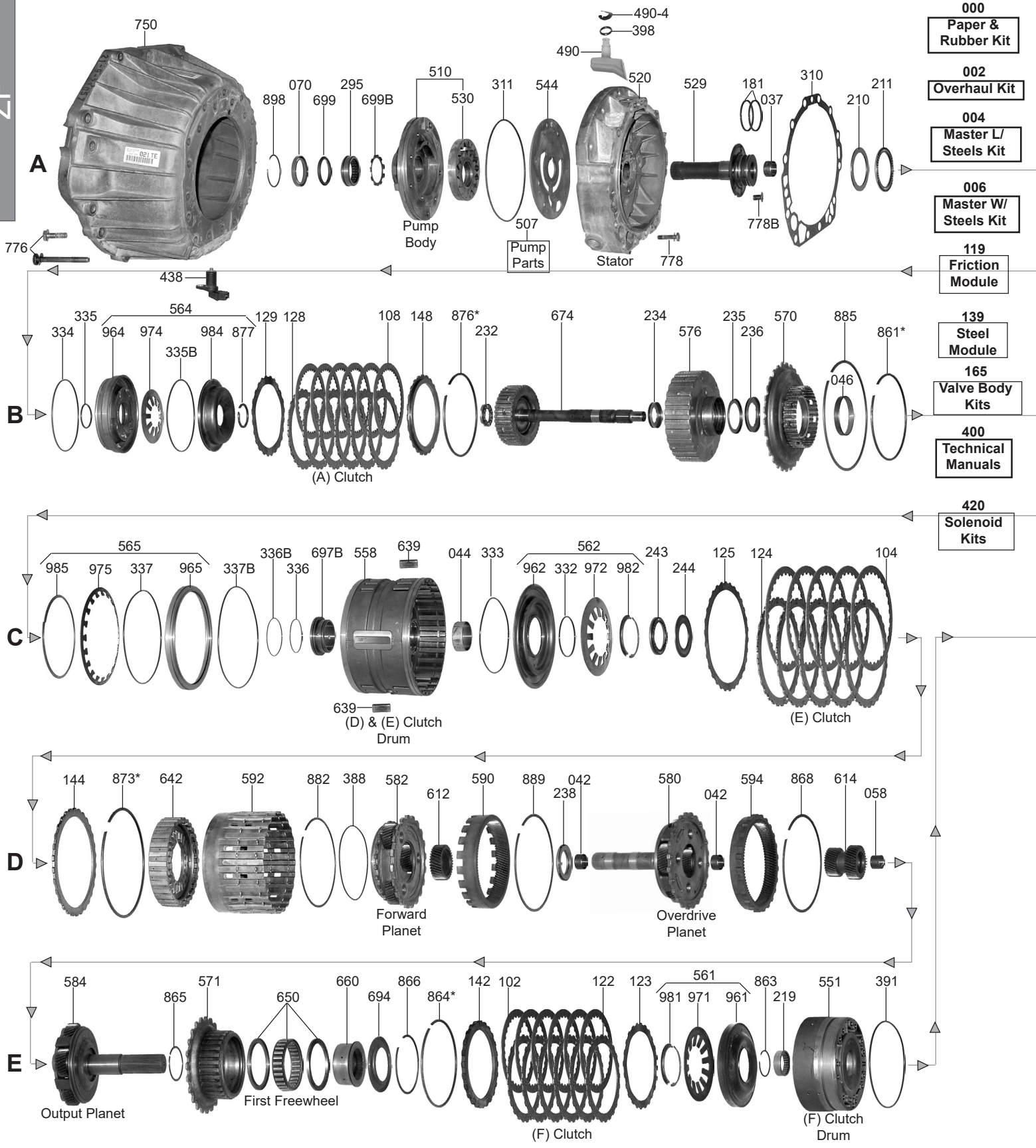

000 Paper & Rubber Kit

002 Overhaul Kit

004 Master L/ Steels Kit

006 Master W/ Steels Kit

119 Friction Module

139 Steel Module

165 Valve Body Kits

400 Technical Manuals

420 Solenoid Kits

© Whatever It Takes Transmission Parts. Inc.

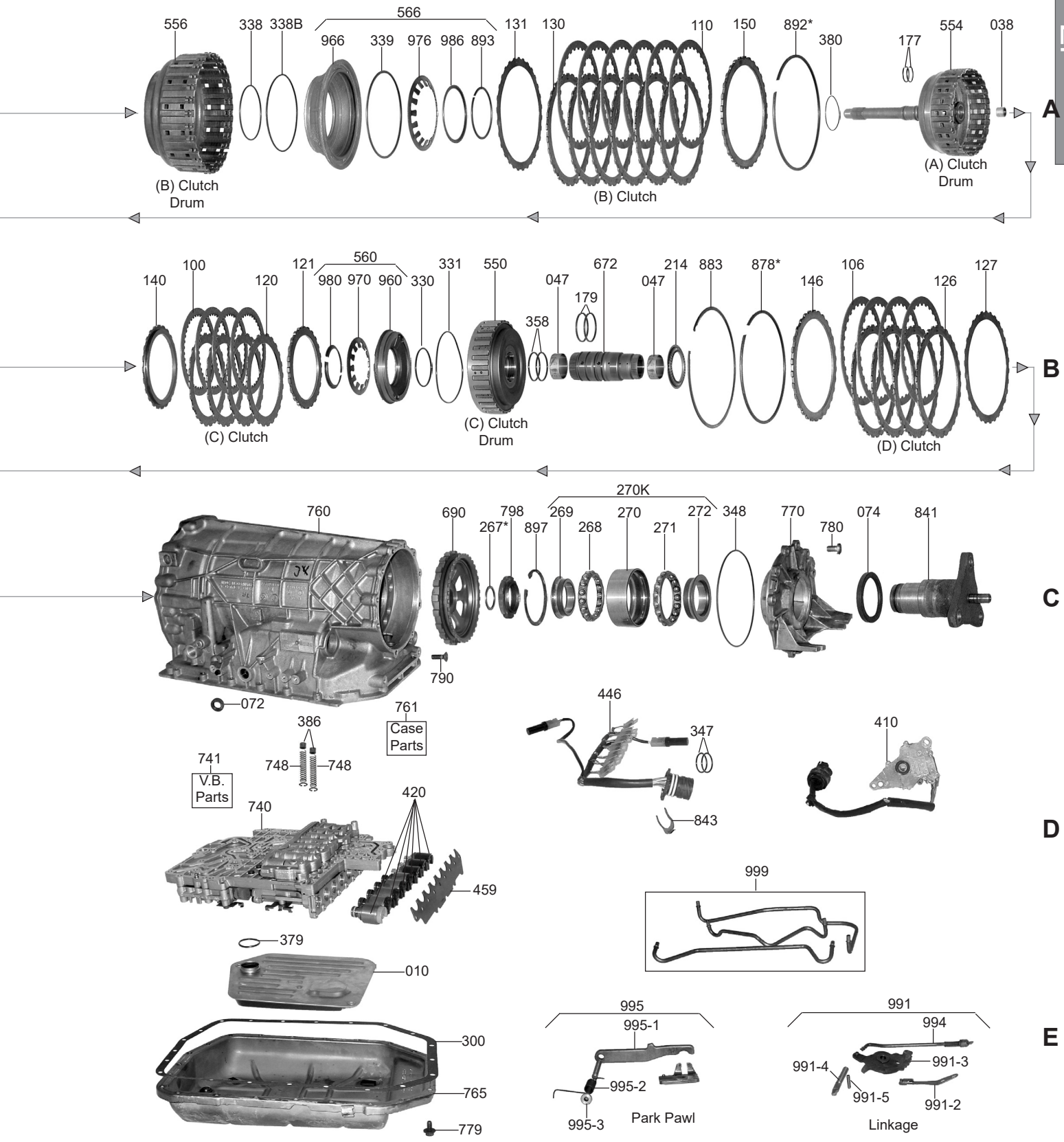

© Whatever It Takes Transmission Parts. Inc.

PART #	PAPER & RUBBER KIT	QTY	REFERENCE #
185000A	Paper & Rubber Kit, ZF5HP24 5 Speed	1	

PART #	OVERHAUL KIT	QTY	REFERENCE #
185002A	Overhaul Kit, ZF5HP24A (Audi/Volkswagen)(AWD) 1994-Up (For 4 Clutch Bonded Piston Sell 185962B)	1	
185002B	Overhaul Kit, ZF5HP24 (BMW/Jaguar/Range Rover) 1995-Up (For F Clutch Bonded Piston Sell 185961B)(For Range Rover You Must Sell 144074A Also)	1	

PART #	MASTER L/STEELS KIT	QTY	REFERENCE #
185004A	Master L/Steels Kit, ZF5HP24A (Audi/VW) (AWD) 1994-Up (For F Clutch Bonded Piston Sell 185961B) (For Units Ending In 004/007)	1	
185004AA	Master L/Steels Kit, ZF5HP24A (Audi/VW) (AWD) 1994-Up (For F Clutch Bonded Piston Sell 185961B) (For Units Ending In All Numbers Except 004/007)	1	
185004B	Master L/Steels Kit, ZF5HP24 (BMW/Jaguar/Range Rover) 1995-Up (For F Clutch Bonded Piston Sell 185961B) (For Units Ending In 005/009/032)(For Range Rover You Must Sell 144074A Also)	1	
185004BA	Master L/Steels Kit, ZF5HP24 (BMW/Jaguar) 1995-Up (For F Clutch Bonded Piston Sell 185961B) (For Units Ending In All Numbers Except 005/009/032)	1	
185004C	Master L/Steels Kit, ZF5HP24 1995-04 (For F Clutch Bonded Piston Sell 185961B)(For Range Rover You Must Sell 144074A Also)	1	

PART #	MASTER W/STEELS KIT	QTY	REFERENCE #
185006A	Master W/Steels Kit, ZF5HP24A (Audi/VW) (AWD) 1994-Up (For F Clutch Bonded Piston Sell 185961B) (For Units Ending In 004/007)	1	
185006AA	Master W/Steels KIt, ZF5HP24A (Audi/VW) (AWD) 1994-Up (For F Clutch Bonded Piston Sell 186961B) (For Units Ending In All Numbers Except 004/007)	1	
185006B	Master W/Steels KIt, ZF5HP24 (BMW/Jaguar/Range Rover) 1995-Up (For F Clutch Bonded Piston Sell 185961B) (For Units Ending In 005/009/032)(For Range Rover You Must Sell 144074A Also)	1	
185006BA	Master W/Steels KIt, ZF5HP24 (BMW/Jaguar) 1995-Up (For F Clutch Bonded Piston Sell 185961B) (For Units Ending In All Numbers Except 005/009/032)	1	
185006C	Master W/Steels Kit, ZF5HP24 1995-04 (For F Clutch Bonded Piston Sell 185961B)(For Range Rover You Must Sell 144074A Also)	1	

PART #	FILTERS	QTY	REFERENCE #
185010A	Filter, ZF5HP24A (Audi A8) (With 1.045” Long Round Pick-Up Tube) 1997-99	1	
185010AA	Filter, ZF5HP24A (Audi A6,A8/S6) (With .872” Long Round Pick-Up Tube) 1999-03	1	
185010B	Filter, ZF5HP24 (BMW/Jaguar/Landrover) With Oval Pick Up Tube 1997-Up	1	

PART #	BUSHINGS	QTY	REFERENCE #
185037B	Bushing, ZF5HP24 (BMW) Stator (Rear) .590” Wide (1.110”OD) 1.020”ID (Bronze) 1995-Up	1	
185038B	Bushing, ZF5HP24 (BMW) A Clutch Drum (Rear) .540” Wide (.560”ID) Bronze 1995-Up	1	
185042B	Bushing, ZF5HP24 (BMW) Overdrive Planet (Front & Rear) (.376” Wide)(.985”OD)(.876”ID) 1995-Up	2	
185044B	Bushing, ZF5HP24 (BMW) D & E Clutch Drum (Rear) .320” Wide (2.000”OD) (1.780”ID) (Babbit) 1995-Up	1	
185046B	Bushing, ZF5HP24 (BMW) C Clutch Hub (2.602”ID) (Bronze) 1995-Up	1	
185047B	Bushing, ZF5HP24 (BMW) Sun Gear Shaft (.635” Wide) 1.415”OD (1.250”ID) Brass 1995-Up	2	
185058B	Bushing, ZF5HP24 (BMW) Output Planet (Front) .785”OD (.675”ID) Brass With Oil Pockets 1995-Up	1	

PART #	METAL CLAD SEALS	QTY	REFERENCE #
69070	Seal, ZF5HP24 Front (2.060”OD) 1995-Up	1	
159072A	Seal, ZF5HP24 Linkage (BMW) 1995-Up (.710”OD)	1	
159074A	Seal, ZF5HP24 Extension Housing (2WD) 2.885”OD (.322” Thick) 1995-Up	1	
144074A	Seal, ZF5HP24 (Range Rover Units Ending In 032) (2.450”OD)(.280” Thick) 2003-Up	1	
175074AB	Seal, ZF5HP24A AWD Extension Housing (2.060”OD) 1995-Up	1	

© Whatever It Takes Transmission Parts. Inc.

PART #	FRICTION CLUTCH	QTY	REFERENCE #
69100	Friction, ZF5HP24 A Clutch #108 & C Clutch #100 (.061" Thick) 40 Teeth 1995-Up	4-10	
185102B	Use 159102A	6	
159102A	Friction, ZF5HP24 (BMW) F Clutch (.062")(30 Teeth)(5.627"OD) 1995-Up	6	
185104B	Use 185110B	5	
185106B	Use 185110B	4	
185108B	Use 69100	6	
185110B	Friction, ZF5HP24 (BMW) B Clutch (.063" Thick) 30 Teeth (7"OD) 1995-Up (Also Fits ZF5HP24 (BMW) D Clutch #106 1995-UP) (Also Fits ZF5HP24 (BMW) E Clutch #104 1995-Up)	4-15	
185119A	Friction Module, ZF5HP24 / ZF5HP24A 1994-Up (For Units Ending In 005/009 In The 5HP24 Series Or 004/007 In The 5HP24A Series)	1	
185119AA	Friction Module, ZF5HP24 / ZF5HP24A 1994-Up (For Units Ending In All Numbers Except 004/005/007/009)	1	
185119C	Friction Module, ZF5HP24/ZF5HP24A 1994-04	1	

PART #	STEEL CLUTCH	QTY	REFERENCE #
185120B	Use U185128B	4	
185121B	Use U185129B	1	
159122A	Steel, ZF5HP24 F Clutch #122 (.071" Thick) 24 Teeth (4.688"ID) 1995-Up		
185122B	Use U159122A	6	
185123B	Steel, ZF5HP24 (BMW) F Clutch (.032") 24 Teeth (4.705"ID) Waved 1995-Up	1	
185124B	Use U185130B	5	
185125B	Use U185131B	1	
185126B	Use U185130B	4	
185127B	Use U185131B	1	
185128B	Steel, ZF5HP24 (BMW) A Clutch (.082" Thick) 24 Teeth (4.206"ID) 1995-Up (Also Fits ZF5HP24 (BMW) C Clutch 1995-Up)	4-10	
185129B	Steel, ZF5HP24 (BMW) A Clutch (.043" Thick) 24 Teeth (4.210"ID) Waved 1995-Up (Also Fits ZF5HP24 (BMW) C Clutch #121 1995-Up)	1-2	
185130B	Steel, ZF5HP24 (BMW) B Clutch (.118" Thick) 30 Teeth (6 1/8"ID) 1995-Up (Also Fits ZF5HP24 (BMW) D Clutch #126 1995-Up) (Also Fits ZF5HP24 (BMW) E Clutch #124 1995-Up)	4-15	
185131B	Steel, ZF5HP24 (BMW) B Clutch (.037" Thick) 30 Teeth (6 1/8"ID) Waved 1995-Up (Also Fits ZF5HP24 (BMW) D Clutch #127 1995-Up)(Also Fits ZF5HP24 (BMW) E Clutch #125 1995-Up)	1-3	
185139A	Steel Module, ZF5HP24 / ZF5HP24A 1994-Up (For Units Ending In 005/009 In The 5HP24 Series Or 004/007 In The 5HP24A Series)	1	
185139AA	Steel Module, ZF5HP24 / ZF5HP24A 1994-Up (For Units Ending In All Numbers Except 004/005/007/009)	1	
185139C	Steel MOdule, ZF5HP24/ZF5HP24A 1995-04	1	

PART #	PRESSURE PLATES	QTY	REFERENCE #
185140B	Pressure Plate, ZF5HP24 (BMW) C Clutch (.176") 24 Teeth (4.206"ID) 1995-Up	1	
185142B	Pressure Plate, ZF5HP24 (BMW) F Clutch (.238" Thick) 24 Teeth (4.684"ID) 1995-Up	1	
185144B	Use U185150B	1	
185146B	Use U185150B	1	
185148B	Pressure Plate, ZF5HP24 (BMW) A Clutch (.116" Thick) 24 Teeth (4.210"ID) Stepped 1995-Up	1	
185150B	Pressure Plate, ZF5HP24 (BMW) B Clutch (.153" Thick) 30 Teeth (6 1/8"ID) 1995-Up (Also Fits ZF5HP24 (BMW) D Clutch #146 1995-Up) (Also Fits ZF5HP24 (BMW) E Clutch #144 1995-Up)	1-3	

PART #	VALVE BODY KITS	QTY	REFERENCE #
T185165B	Valve Body Kit, ZF5HP24 1994-Up (Transgo)	1	1

PART #	SEALING RINGS	QTY	REFERENCE #
185175A	Ring Kit, ZF5HP24/24A 1995-06	1	
185177BT	Ring, ZF5HP24 (BMW) Input Shaft (Scarf Cut) (Teflon) 1995-Up	2	
185179BT	Ring, ZF5HP24 (BMW) Sun Gear Shaft (Scarf Cut) (Teflon) 1995-Up	2	
185181BT	Ring, ZF5HP24 (BMW) Stator To B Clutch Drum (.096" Thick) Lap Joint (Teflon) 1995-Up	2	

PART #	WASHERS & BEARINGS	QTY	REFERENCE #
185210B	Race, ZF5HP24/ZF5HP24A Stator Tube To B Clutch Drum (.055" Thick) 2.875"OD (2.175"ID) 1995-Up	1	
185210BA	Race, ZF5HP24/ZF5HP24A Stator Tube To B Clutch Drum (.063" Thick) 2.875"OD (2.175"ID) 1995-Up	1	

© Whatever It Takes Transmission Parts. Inc.

ZF

PART #	WASHERS & BEARINGS (Continued)	QTY	REFERENCE #
185210BB	Race, ZF5HP24/ZF5HP24A Stator Tube To B Clutch Drum (.071” Thick) 2.875”OD (2.175”ID) 1995-Up	1	
185210BC	Race, ZF5HP24/ZF5HP24A Stator Tube To B Clutch Drum (.078” Thick) 2.875”OD (2.175”ID) 1995-Up	1	
185210BD	Race, ZF5HP24/ZF5HP24A Stator Tube To B Clutch Drum (.086” Thick) 2.875”OD (2.175”ID) 1995-Up	1	
185210BE	Race, ZF5HP24/ZF5HP24A Stator Tube To B Clutch Drum (.094” Thick) 2.875”OD (2.175”ID) 1995-Up	1	
185210BF	Race, ZF5HP24/ZF5HP24A Stator Tube To B Clutch Drum (.102” Thick) 2.875”OD (2.175”ID) 1995-Up	1	
185210BG	Race, ZF5HP24/ZF5HP24A Stator Tube To B Clutch Drum (.110” Thick) 2.875”OD (2.175”ID) 1995-Up	1	
185210BH	Race, ZF5HP24/ZF5HP24A Stator Tube To B Clutch Drum (.118” Thick) 2.875”OD (2.175”ID) 1995-Up	1	
185211B	Bearing, ZF5HP24/ZF4HP24A Stator Tube To B Clutch Drum (.149” Thick) 2.941”OD (2.285”ID) 1995-Up	1	
185214B	Bearing W/Race, ZF5HP24/Z5HP24A C Clutch Drum To D & E Clutch Drum (.137” Thick) 2.870”OD (1.900”ID) 1995-Up	1	
185219B	Caged Needle Bearing, ZF5HP24/ZF5HP24A In F Clutch Drum (.468” Thick) 1.655”OD 1995-Up	1	
185232B	Bearing W/Race, ZF5HP24/ZF5HP24A A Clutch Drum To Hub (.283” Thick) 1.508”OD (.645”ID) 1995-Up	1	
185234B	Bearing W/Race, ZF5HP24/ZF5HP24A A Clutch Hub To B Clutch Hub (.305” Thick) 1.735”OD (1.040”ID) 1995-Up	1	
185235B	Race, ZF5HP24 (BMW) B Clutch Hub To C Clutch Hub (2.353”OD) (1.745”ID) 1995-Up	1	
185236B	Bearing W/Race, ZF5HP24 (BMW) B Clutch Hub To C Clutch Hub (.257” Thick) 2.330”OD (1.560”ID) 1995-Up	1	
185236BK	Bearing Set, ZF5HP24/ZF5HP24A B Clutch Hub To C Clutch Hub (.257” Thick)(2.330”OD) (1.560”ID) 1995-Up (Contains: # 236 & 235)	1	
185238B	Bearing W/Races, ZF5HP24/ZF5HP24A Forward Sun Gear To Overdrive Planet (.200” Thick) 2.455”OD (1.645”ID) 1995-Up	1	
185243B	Bearing W/Race, ZF5HP24/ZF5HP24A D & E Clutch Drum To Forward Planet (.260” Thick) 2.520”OD (1.820”ID) 1995-Up	1	
185243BK	Bearing Set, ZF5HP24/ZF5HP24A D & E Clutch Drum To Forward Planet (Contains: # 243B & 244B) 1995-Up	1	
185244B	Race, ZF5HP24/ZF5HP24A D & E Clutch To Forward Planet (.078” Thick) 2.836”OD (1.655”ID) 1995-Up	1	
185267BA	Shim, ZF5HP24 (BMW) Park Gear To Yoke (Selective) (1.591”OD) 1995-Up	1	
185270BK	Ball Bearing Assembly, ZF5HP24 (BMW) Ball Bearing With Inner & Outer Races (16 Balls) 1.300” Thick Race (Cast # SKF BA2B Italy-A 636002 AA) 1995-Up	1	
185295B	Caged Needle Bearing, ZF5HP24 (BMW) Pump Body (2.045”OD) 1995-Up (Cast # INA F-216974 Germany 6136)	1	

PART #	GASKETS & RUBBER COMPONENTS	QTY	REFERENCE #
185300A	Gasket, ZF5HP24 AWD 1995-Up	1	
185300B	Gasket, ZF5HP24 2WD 1995-00	1	
185310B	Gasket, ZF5HP24 (BMW) Pump Cover To Case 1995-Up	1	
185311B	Use 175311A	1	
175311A	O-Ring, ZF5HP24 (BMW) Pump Body 1995-Up	1	
185348B	O-Ring, ZF5HP24 (BMW) Extension Housing 1995-Up	1	
185386B	Use 175386A	2	
175386A	Seal, ZF5HP24 (BMW) D & E Clutch To Case) 1995-Up	2	

PART #	TECHNICAL MANUALS	QTY	REFERENCE #
185400A	Repair Manual, ZF5HP24 FWD/AWD (Audi/Volkswagen)	1	
159400A-1	Valve Body Manual, ZF5HP24	1	
185400B	Repair Manual, ZF5HP24 RWD (BMW/Jaguar/Land Rover)	1	
185400BFD	Manual, ZF5HP24/ZF5HP24A Functional Description 1994-Up	1	

PART #	ELECTRICAL COMPONENTS	QTY	REFERENCE #
185410B	Switch, ZF5HP24 (BMW) Neutral Safety (Cast # 0501 211 451) With 5 Prong Round Connector On A Wire Harness) 1995-Up	1	
185420A	Solenoid Kit, ZF5HP24/ZF5HP24A (For ZF5HP24 Units Ending In 021/022/026/027/028/029/032/034)(For All ZF5HP24A Units) 1994-Up	1	
175420B	Solenoid Kit, ZF5HP24A (For Units Ending In 005/009/013/014/015/016/024) (Contains: 3 Shift, 4 EPC Solenoids With O-Rings)	1	

© Whatever It Takes Transmission Parts. Inc.

179436A ..... Sensor, ZF5HP24 (All) Input Speed ..... 1 .....
185436A ..... Sensor, ZF5HP24A (Audi) Output Speed (Located In The Speed-O Cover) 1995-Up ..... 1 .....
185436B ..... Sensor, ZF5HP24 (BMW) Input & Output Speed (Goes Through The Valve Body)(Takes 2) ..... (Plugs Into Wire Harness # 446) 1995-Up ..... 2 .....
185446A ..... Wire Harness, ZF5HP24A (Audi/VW AWD) Internal (With 16 Prong Case Connector)(With 8 Two ..... Blade Flat & 1 Two Blade Rectangle Connector) 1994-Up ..... 1 .....
185446B ..... Wire Harness, ZF5HP24 (BMW) Internal (With 16 Prong Case Connector)(With 8 Two Blade Flat ..... Connectors And 2 Two Blade Round Connectors) 1995-Up ..... 1 .....

PART #	MISCELLANEOUS COMPONENTS	QTY	REFERENCE #
185490B	Vent, ZF5HP24 (BMW) Plastic In Pump Cover 1995-Up	1	.....
185459B	Retainer, ZF5HP24 (BMW) Holds Solenoids To Valve Body 1995-Up	1	.....

PART #	HARD PARTS	QTY	REFERENCE #
185510A	Pump Body W/Gears, ZF5HP24 (Audi)(Cast # 105 841 00 77) 1994-Up	1	.....
185510B	Pump Body W/Gears, ZF5HP24 (BMW) (Cast # 105 841 0078) 1995-Up	1	.....
185510BA.....	Pump Body W/Gears, ZF5HP24 (BMW) (Cast # 105 841 0075) 1995-Up	1	.....
185520B	Pump Cover, ZF5HP24 (BMW) Aluminum (2.165” Thick At Edge) 1995-Up	1	.....
185529B	Stator Tube, ZF5HP24 (BMW) 5 1/2” Long (3.422”OD Flange) .923”ID At Splines ..... (1 Rear Bushing) 1995-Up	1	.....

PART #	PUMP COMPONENTS	QTY	REFERENCE #
185530B	Pump Gear Set, ZF5HP24 (BMW) 14 Teeth Inner Gear (.551” Thick) 1995-Up	1	.....

PART #	HARD PARTS (Continued)	QTY	REFERENCE #
185544A	Pump Plate, ZF5HP24A (Audi) 1994-Up	1	.....
185544B	Pump Plate, ZF5HP24 (BMW) (.118” Thick)(6 11/16”OD) 1994-Up	1	.....
185550B	Drum, ZF5HP24 (BMW) C Clutch (Aluminum) 24 Teeth Steels (Cast # 105847201) 1995-Up	1	.....
185551B	Drum, ZF5HP24/ZF5HP24A (F Clutch)(Aluminum) 6 Clutch (2.851” Thick) 6 3/8”OD 1994-Up	1	.....
185554B	Drum, ZF5HP24/ZF5HP24A Forward (A Clutch)(With 7 1/4” Long Shaft)(27 Splines) 6 Clutch ..... (Uses 24 Teeth Steels) 1995-Up (To Keep Drum Frome Braking Sell D159741AP-1 Or ..... S159741AP-1K)	1	.....
185554BHD....	Drum, ZF5HP24/ZF5HP24A Forward (A Clutch)(With 7 1/4” Long Shaft)(27 Splines)(6 Clutch) ..... (Uses 24 Teeth Steels) 1995-Up (Heavy Duty, Extra Thick Drum)(To Keep Drum From Braking ..... Sell D159741AP-1 Or S159741AP-1K).....	1	.....
185556B	Drum, ZF5HP24 (BMW) B Clutch (6 Clutch) Stamped Steel (30 Teeth Steels) 7 1/2”OD (3.550” Tall) ..... 2.040”ID Bore 1995-Up	1	.....
185558B	Drum, ZF5HP24 (BMW) D & E Clutch (Aluminum) 4.58” Wide (7 5/8”OD) (Cast # 1058 473 037) 1995-Up	1	.....
185560B	Piston Kit, ZF5HP24 (BMW) C Clutch (Aluminum Piston) Cast # 1058 472 020 1995-Up	1	.....
185561B	Piston Kit, ZF5HP24 (BMW) F Clutch (Bonded Piston) 1995-Up	1	.....
185562B	Piston Kit, ZF5HP24 (BMW) E Clutch (Steel Piston) 1995-Up	1	.....
185564B	Piston Kit, ZF5HP24 (BMW) A Clutch (Aluminum Piston) (With Cast # 1058470 059) 1995-Up	1	.....
185565B	Piston Kit, ZF5HP24 (BMW) D Clutch.....	1	.....
185566B	Piston Kit, ZF5HP24 (BMW) B Clutch (Cast # 1058471 039 A On Piston) 1995-Up	1	.....
185570B	Hub, ZF5HP24 (BMW) C Clutch (30 Outer Lugs) 40 Teeth Clutch Hub 1995-Up.....	1	.....
185571B	Hub, ZF5HP24 (BMW) F Clutch (1st Gear Freewheel Outer Race) 24 Outer Lugs ..... (30 Clutch Splines) 2.075” Thick (3.495”ID) 1995-Up	1	.....
185576B	Hub, ZF5HP24/ZF5HP24A B Clutch (30 Clutch Splines) With 2.600”OD Hub On Rear ..... For Bushing #046 1995-Up	1	.....
185580B	Planet, ZF5HP24 (BMW) Overdrive With Shaft (4 Gear Steel) 24 Outer Lugs ..... (Uses A 32 Teeth Sun Gear #614)(32 Teeth Pinions, 2 Grooves) 1995-Up	1	.....
185582B	Planet, ZF5HP24 (BMW) Forward (3 Gear Steel) 20 Outer Lugs (Uses A 36 Teeth ..... Sun Gear) (29 Teeth Pinions, 1 Groove) 1995-Up	1	.....
185584B	Planet, ZF5HP24 (BMW) Output With Shaft (7 13/16” Long) 5 Gear (28 Teeth Pinions ..... With 3 Grooves) 1995-Up	1	.....
185590B	Ring Gear, ZF5HP24 (BMW) Overdrive Planet (100 Teeth) 20 Lugs (1.350” Thick) 1995-Up	1	.....
185592B	Ring Gear, ZF5HP24 (BMW) Forward Planet With Shell (Stamped Steel) 4.070” Tall ..... (93 Teeth Ring Gear) 1995-Up	1	.....
185594B	Ring Gear, ZF5HP24 (BMW) Output Planet (90 Teeth) 24 Outer Lugs (.878” Thick) 1995-Up.....	1	.....
185612B	Sun Gear, ZF5HP24 (BMW) Forward Planet (36 Teeth, 1 Groove) .750” Thick (2.332”OD) 1995-Up	1	.....
185614B	Sun Gear, ZF5HP24 (BMW) Overdrive/Output Planet (32 Teeth/35 Teeth) 1.646” Long ..... (Splined ID) 1995-Up	1	.....

© Whatever It Takes Transmission Parts. Inc.

PART #	HARD PARTS (Continued)	QTY	REFERENCE #
185639B	Key Way, ZF5HP24 (BMW) Holds D & E Clutch Drum To Case (.240" Thick) .472" Wide (1.170" Long) 1995-Up	2	
185642B	Hub, ZF5HP24 (BMW) E Clutch (Aluminum) 30 Clutch Splines (1.260" Thick) (2.688"ID) 1995-Up	1	

PART #	SPRAGS & ONE WAY CLUTCHES	QTY	REFERENCE #
159650A	Freewheel, ZF5HP24 (BMW) 1st Gear Freewheel (30 Elements)(1/2 Plastic & 1/2 Metal Cage) 1995-Up	1	
185650B	Use 159650A	1	

PART #	HARD PARTS (Continued)	QTY	REFERENCE #
185660B	Inner Race, ZF5HP24 (BMW) 1st Gear Freewheel (1.250" Thick) 2.845"OD (Splined ID) 1995-Up	1	
185672B	Shaft, ZF5HP24 (BMW) Sun Gear (4.530" Long, Splined Ends) 1995-Up	1	
185674B	Hub With Shaft, ZF5HP24 (BMW) A Clutch (10 3/8" Long) (40 Teeth Hub) 1995-Up	1	
185690B	Park Gear, ZF5HP24 (BMW) 20 Lugs (36 Teeth Reluctor) 1995-Up	1	
185694B	Retainer, ZF5HP24 (BMW) 1st Gear Freewheel (3.777"OD)(2.287"ID) 1995-Up	1	
185697BB	Sleeve, ZF5HP24 (BMW) D & E Clutch Drum (.435" Thick) 2.157"OD (1.446"ID) Has 2 O-Rings & 2 Holes (Steel) 1995-Up	1	
185699B	Spacer, ZF5HP24 (BMW) Front Seal To Caged Needle Bearing 1995-Up (.076" Thick) 2.040"OD (1.610"ID) With 10 Humps	1	
185699BB	Oil Deflector, ZF5HP24 (BMW) Caged Needle Bearing To Pump Body (Plastic) (1.545"ID) 1995-Up	1	
185740B	Valve Body, ZF5HP24 (BMW) With 8 Solenoids On One End & Speed Sensor (Cast # 1058 427 022)(5 Black & 3 Blue Solenoids) 1995-Up	1	
185740B-5	Valve Housing, ZF5HP24 (BMW)(Top Section)(Aluminum, No Valves)(Cast # 1058 427 068 F5) (For Units Ending In 021/022/026/027/028/029/032) 1995-Up	1	
185740BB	Valve Body, ZF5HP24 (With 7 Solenoids & Speed Sensor)(Cast # 1060 427 013 F2) (4 Black & 3 Blue Solenoids) 1997-Up	1	
185740BC	Valve Body, ZF5HP24 (With 7 Solenoids & Speed Sensor)(Cast # 1060 427 135 F4) (4 Black & 3 Brown Solenoids) 2004-Up	1	
185740C	Valve Body, ZF5HP24 (Jaguar) With 8 Solenoids On One End & Speed Sensor (Cast # 1058 427 022)(4 Black, 3 Brown & 1 Green Solenoid) 1995-Up	1	
185740CA	Valve Body, ZF5HP24 (Jaguar)(With 8 Solenoids On One End)(4 Black, 3 Blue & 1 Green Solenoid)	1	

PART #	VALVE BODY COMPONENTS	QTY	REFERENCE #
S185741AP-1K	Valve Kit, ZF5HP24 Pressure Regulator (Oversized)(Contains: Valve & Spring)(Must Use Tool T-F-139740-TL & T-VB-Fix)(Keeps Pressure From Spiking And Braking Drum)	1	
T-F-139740-TL	Tool For S185741AP-1K	1	
159741AP-1	Valve, ZF5HP24/ZF5HP24A Pressure Regulator (Updated)(Keeps Pressure From Spiking & Breaking Forward Drum)	1	
185741G	Accumulator Piston, ZF5HP24 Forward & Reverse Clutch (Updated) (In The Valve Body) This Is The A Clutch & C Clutch Accumulator (Takes 2 Per Transmission) 1994-Up	2	
159742A	Secondary Valve Body, ZF5HP24/ZF5HP24A Lower Front Section	1	

PART #	HARD PARTS (Continued)	QTY	REFERENCE #
185748B	Spring, ZF5HP24 (BMW) Holds D & E Clutch Seal In Case (.435"OD) 1.680" Long 1995-Up	2	
185750B	Bell Housing, ZF5HP24 (BMW) 7 3/4" Top Bolts (Sensor At 7:00) Cast # 1058-442-911 (Starter At 9:00 & 3:00) 1995-Up	1	
185750C	Bell Housing, ZF5HP24 (Jaguar) Cast # 1058-422-009	1	
185760B	Case, ZF5HP24 (BMW) (16 5/8" Long) 1995-Up	1	
185760C	Case, ZF5HP24 (Jaguar) (Cast # 1058401083)	1	
185765B	Pan, ZF5HP24 (BMW) Bottom (22 Bolt, With Drain Plug) 1995-Up	1	
185770B	Extension Housing, ZF5HP24 (BMW) Aluminum (Cast # 1058 414 007) 10 Bolt (2.870"OD Rear Seal) 1995-Up	1	
185776BK	Bolt Set, ZF5HP24 (BMW) Bell Housing To Case (20 Pieces) 1995-Up	1	
185778BBK	Bolt Set, ZF5HP24 (BMW) Pump Cover To Tube (5 Pieces) 1995-Up	1	
185778BK	Bolt Set, ZF5HP24 (BMW) Pump Cover To Body (10 Pieces) 1995-Up	1	
185779BK	Bolt Set, ZF5HP24 (BMW) Pan To Case (22 Pieces) 1995-Up	1	
185780BK	Bolt Set, ZF5HP24 (BMW) Extension Housing To Case (10 Pieces) 1995-Up	1	
185782BK	Bolt Set, ZF5HP24 (BMW) Valve Body To Case (22 Pieces) 1995-Up	1	
185790BK	Bolt Set, ZF5HP24 (BMW/Jaguar) F Clutch Drum To Case (12 Pieces) 1995-Up	1	
185798B	Nut, ZF5HP24 (BMW) Holds Yoke To Output Planet (6 Square Notches) 1995-Up	1	

© Whatever It Takes Transmission Parts. Inc.

185841B ..... Yoke, ZF5HP24 (BMW) Output Shaft (5.920" Long) (.554"OD Pilot) 1995-Up 1
185843B ..... Clip, ZF5HP24 (BMW) Holds Case Connector To Case 1995-Up 1
185861BA..... Snap Ring, ZF5HP24 (BMW) Holds C Clutch Pressure Plate In (Selective) 1995-Up 1
185863B ..... Snap Ring, ZF5HP24 (BMW) Holds Bearing #219 In Drum (.468" Thick) (1.738"OD) 1995-Up 1
185864BA..... Snap Ring, ZF5HP24 (BMW) Holds F Clutch Pressure Plate In (Selective) 1995-Up 1
185865B ..... Snap Ring, ZF5HP24 (BMW) Holds #571 Hub To F Clutch Drum (.042" Thick) (2.353"OD) 1995-Up 1
185866B ..... Snap Ring, ZF5HP24 (BMW) Holds 1st Gear Freewheel To #571 Hub (.077" Thick) (3.985"OD) 1995-Up 1
185868B ..... Use U185889B 1
185873BA..... Use U185892 1
185876BA..... Snap Ring, ZF5HP24 (BMW) (1.80mm) Holds A Clutch Pressure Plate In 1995-Up 1
185876BB..... Snap Ring, ZF5HP24 (BMW) (2.00mm) Holds A Clutch Pressure Plate In 1995-Up 1
185876BC..... Snap Ring, ZF5HP24 (BMW) (2.20mm) Holds A Clutch Pressure Plate In 1995-Up 1
185876BD..... Snap Ring, ZF5HP24 (BMW) (2.40mm) Holds A Clutch Pressure Plate In 1995-Up 1
185876BE..... Snap Ring, ZF5HP24 (BMW) (2.60mm) Holds A Clutch Pressure Plate In 1995-Up 1
185876BF ..... Snap Ring, ZF5HP24 (BMW) (2.80mm) Holds A Clutch Pressure Plate In 1995-Up 1
185876BG ..... Snap Ring, ZF5HP24 (BMW) (3.00mm) Holds A Clutch Pressure Plate In 1995-Up 1
185876BH..... Snap Ring, ZF5HP24 (BMW) (3.20mm) Holds A Clutch Pressure Plate In 1995-Up 1
185876BJ ..... Snap Ring, ZF5HP24 (BMW) (3.40mm) Holds A Clutch Pressure Plate In 1995-Up 1
185876BK..... Snap Ring, ZF5HP24 (BMW) (3.60mm) Holds A Clutch Pressure Plate In 1995-Up 1
185877B ..... Snap Ring, ZF5HP24 (BMW) Holds A Clutch Retainer In (.097" Thick) (1.630"OD) 1995-Up 1
185878BA..... Use U185892 1
185882B ..... Snap Ring, ZF5HP24 (BMW) Holds Overdrive Ring Gear To Forward Planet (.060" Thick) (6 1/16"OD) 1995-Up 1
185883B ..... Snap Ring, ZF5HP24 (BMW) Holds D & E Clutch Drum In Case (.109" Thick) 8"OD (Beveled) 1995-Up 1
185885B ..... Snap Ring, ZF5HP24 (BMW) Holds Hub # 570 To B Clutch Drum (.101" Thick) (7 7/16"OD) 1995-Up 1
185889B ..... Snap Ring, ZF5HP24 (BMW) Holds Overdrive Planet Ring Gear To Forward Planet Ring Gear Shell (.077" Thick) (6 5/8"OD) 1995-Up (Also Fits ZF5HP24 (BMW) Snap Ring # 868 1995-Up) 1-2
185892BA..... Snap ring, ZF5HP24 (BMW) Holds B Clutch Pressure Plate In (Selective) 1995-Up (Also Fits ZF5HP24 (BMW) D Clutch #878 1995-Up) (Also Fits ZF5HP24 (BMW) E Clutch #873 1995-Up) 1-3
185893B ..... Snap Ring, ZF5HP24 (BMW) Holds B clutch Retainer In Drum (.095" Thick) (3.381"OD) 1995-Up 1
185897B ..... Snap Ring, ZF5HP24 (BMW) Holds #270 Extension Housing (.120" Thick) 3.620"OD (With 2 Eyelets) 1995-Up 1
185898B ..... Snap Ring, ZF5HP24 Holds Front Seal To Pump Body (.057" Thick) (2.155"OD) 1995-Up 1
185960B ..... Piston, ZF5HP24 (BMW) C Clutch (Aluminum) Cast # 1058 472 020 (.935" Thick) 4.837"OD (2.370"ID) 1995-Up 1
185961B ..... Piston, ZF5HP24/ZF5HP24A (F Clutch) (Bonded) .980" Thick (5.578"OD) 2.315"ID 1995-Up 1
185962B ..... Piston, ZF5HP24 (BMW) E Clutch (Steel) .660" Thick (7"OD) 2.530"ID 1995-Up 1
185964B ..... Piston, ZF5HP24 (BMW) A Clutch (Aluminum) Cast # 1058470 059 (5.145"OD) (1.465"ID) 1995-Up 1
185965B ..... Piston, ZF5HP24 (BMW) D Clutch 1
185966B ..... Piston, ZF5HP24 (BMW) B Clutch (Aluminum) Cast # 1058471 039 A (1.615" Thick) 7"OD (3.325"ID) 8 Oval Holes 1995-Up 1
185970B ..... Spring, ZF5HP24 (BMW) C Clutch Return (.055" Thick) 3.773"OD (12 Fingers) 1995-Up 1
185971B ..... Spring, ZF5HP24 (BMW) F Clutch Return (.080" Thick) 5.040"OD (12 Fingers) 1995-Up 1
185972B ..... Spring, ZF5HP24 (BMW) E Clutch Return (.069" Thick) 5.290"OD (12 Fingers) 1995-Up 1
185974B ..... Spring, ZF5HP24 (BMW) A Clutch Return (.060" Thick) 3.570"OD (10 Fingers) 1995-Up 1
185975B ..... Spring, ZF5HP24 (BMW) D Clutch Return (.055" Thick) 6 5/8"OD (20 Fingers) 1995-Up 1
185976B ..... Spring, ZF5HP24 (BMW) B Clutch Return (.057" Thick) 4.823"OD (16 Fingers) 1995-Up 1
185980B ..... Retainer, ZF5HP24 (BMW) C Clutch Return Spring (C Clip) 1995-Up (2 Per Pack) (Also Fits ZF5HP24 (BMW) F Clutch #981 1995-Up) 1-2
185981B ..... Use 185980B 1
185982B ..... Retainer, ZF5HP24 (BMW) E Clutch Return Spring (C Clip) 1995-Up (2 Per Pack) 1
185984B ..... Retainer, ZF5HP24 (BMW) A Clutch Spring (Steel) 4.780"OD (1.400"ID) 1995-Up 1
185985B ..... Snap Ring, ZF5HP24 (BMW) Holds D Clutch Spring Retainer In (.095" Thick) 5.600"OD (Stepped) 1995-Up 1
185986B ..... Retainer, ZF5HP24 (BMW) B Clutch Return Spring (.086" Thick) 3.742"OD (3.273"ID) Stepped 1995-Up 1
185991B ..... Linkage, ZF5HP24 (BMW) Internal (5 Pieces) 1995-Up 1
185995B ..... Park Pawl Assembly, ZF5HP24 (BMW) (4 Pieces) 1995-Up 1
185999B ..... Oil Tube Set, ZF5HP24 (BMW) (3 Pieces) 1995-Up 1

© Whatever It Takes Transmission Parts. Inc.

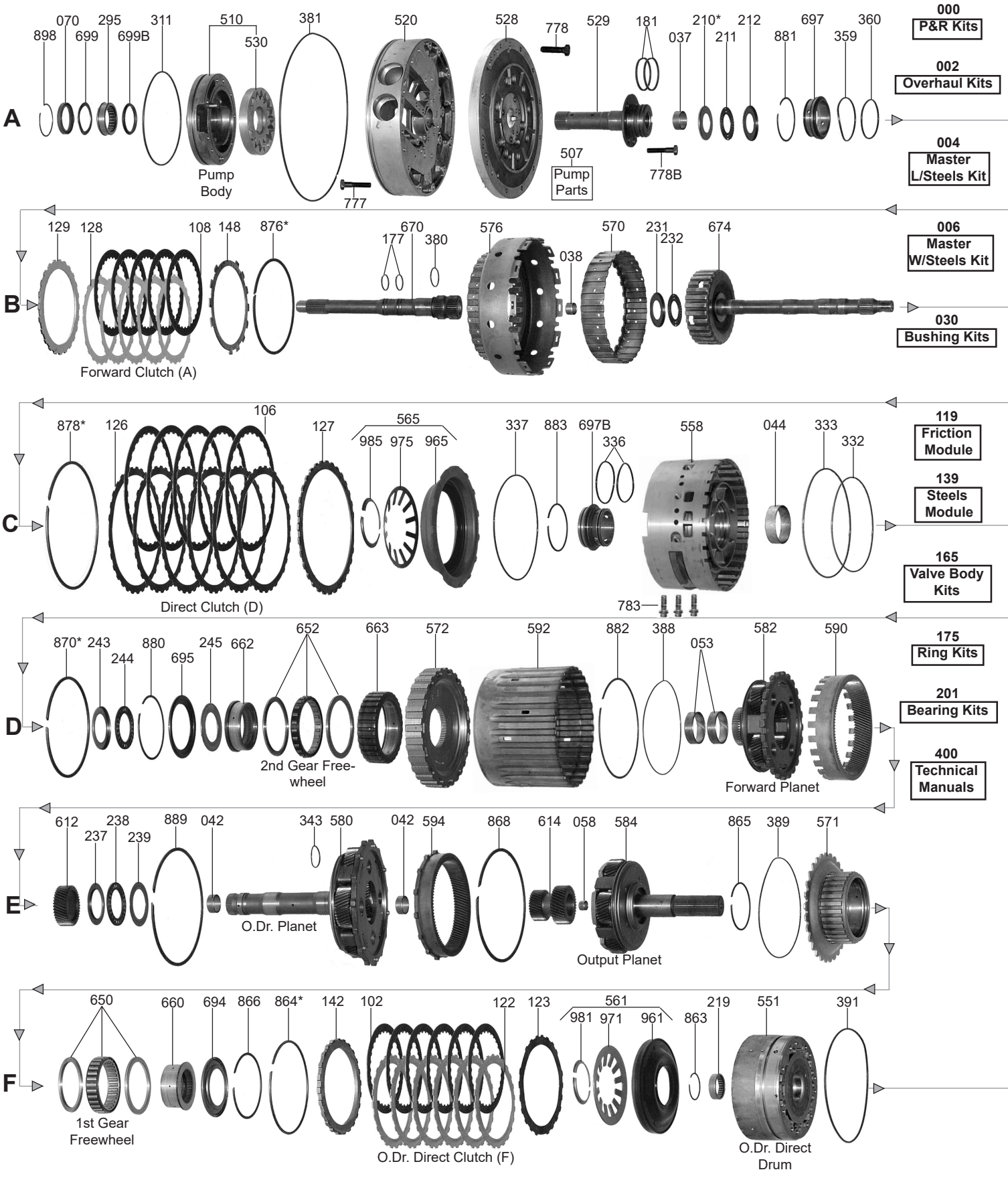
A
070
898
699
295
699B
311
510
530
381
520
528
778
529
181
037
210*
211
212
881
697
359
360
Pump Body
777
507
Pump Parts
778B
B
129
128
108
148
876*
177
670
380
576
038
570
231
232
674
Forward Clutch (A)
C
878*
126
106
127
565
985
975
965
337
883
697B
336
558
044
333
332
Direct Clutch (D)
783
D
870*
243
244
880
695
245
662
652
663
572
592
882
388
053
582
590
2nd Gear Free-wheel
Forward Planet
E
612
237
238
239
889
042
343
580
042
594
868
614
058
584
865
389
571
O.Dr. Planet
Output Planet
F
650
660
694
866
864*
142
102
122
123
561
981
971
961
863
219
551
391
1st Gear Freewheel
O.Dr. Direct Clutch (F)
O.Dr. Direct Drum
000
P&R Kits
002
Overhaul Kits
004
Master L/Steels Kit
006
Master W/Steels Kit
030
Bushing Kits
119
Friction Module
139
Steels Module
165
Valve Body Kits
175
Ring Kits
201
Bearing Kits
400
Technical Manuals

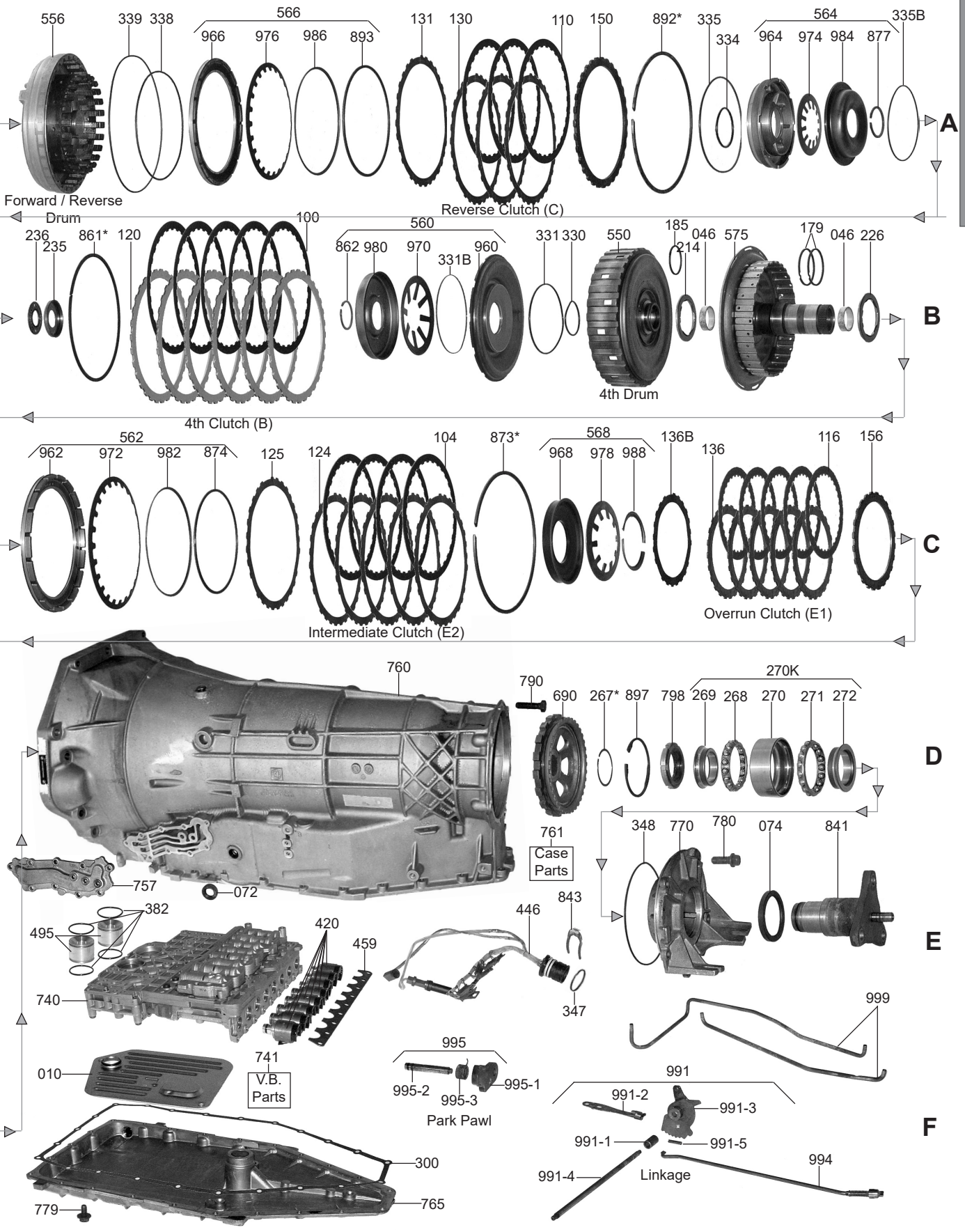

© Whatever It Takes Transmission Parts. Inc.

ZF

PART #	PAPER & RUBBER KITS	QTY	REFERENCE #
159000A	Paper & Rubber Kit, ZF5HP30 (BMW 540I / 740I) RWD 1993-00 (Also Fits Bentley/Rolls Royce 1998-99)	1	

PART #	OVERHAUL KIT	QTY	REFERENCE #
159002A	Overhaul Kit, ZF5HP30 (BMW 540I/740I) RWD (Without Pistons) 1993-00 (Also Fits Bentley/Rolls Royce 1998-99)	1	

PART #	MASTER L/STEELS KIT	QTY	REFERENCE #
159004A	Master L/Steels Kit, ZF5HP30 (BMW) 1991-Up (For Bonded Pistons Sell 159961AK) (For Units Ending In 010/011/029/030/031)	1	
159004AA	Master L/Steels Kit, ZF5HP30 (BMW) 1991-Up (For Bonded Pistons Sell 159961AK) (For Units Ending In 017/027/028/032/039/040)	1	
159004AB	Master L/Steels Kit, ZF5HP30 (BMW) 1991-Up (For Bonded Pistons Sell 159961AK) (For Units Ending In 026)	1	
159004C	Master L/Steels Kit, ZF5HP30 (BMW) (Combo) 1991-Up (For Bonded Pistons Sell D159961AK)	1	

PART #	MASTER W/STEELS KIT	QTY	REFERENCE #
159006A	Master W/Steels Kit, ZF5HP30 (BMW) 1991-Up (For Bonded Pistons Sell 159961AK) (For Units Ending In 010/011/029/030/031)	1	
159006AA	Master W/Steels Kit, ZF5HP30 (BMW) 1991-Up (For Bonded Pistons Sell 159961AK) (For Units Ending In 017/027/028/032/039/040)	1	
159006AB	Master W/Steels Kit, ZF5HP30 (BMW) 1991-Up (For Bonded Pistons Sell 159961AK) (For Units Ending In 026)	1	
159006C	Master W/Steels Kit, ZF5HP30 (BMW)(Combo) 1991-Up (For Bonded Pistons Sell D159961AK)	1	

PART #	FILTERS	QTY	REFERENCE #
159010A	Filter, ZF5HP30 1993-Up	1	

PART #	BUSHINGS	QTY	REFERENCE #
159030A	Bushing Kit, ZF5HP30 1993-Up	1	
159037A	Bushing, ZF5HP30 Stator Tube (Rear) (1.024”OD) 1993-Up	1	
159038A	Bushing, ZF5HP30 Input Shaft (Rear) (.670”ID) 1993-Up	1	
159042A	Bushing, ZF5HP30 Overdrive Planet Shaft (.950”ID) 1993-Up	2	
159044A	Bushing, ZF5HP30 Direct/Intermediate & Overrun Clutch Housing 1993-Up	1	
159046A	Bushing, ZF5HP30 Direct Clutch Hub With Hollow Shaft 1993-Up	2	
159053A	Bushing, ZF5HP30 Forward Planet (1.805”ID) 1993-Up	2	
159058A	Bushing, ZF5HP30 Output Planet (Pilot) (.655”ID) 1993-Up	1	

PART #	METAL CLAD SEALS	QTY	REFERENCE #
69070	Seal, ZF5HP30 Front Pump (2.060”OD) 1993-Up	1	
159072A	Seal, ZF5HP30 Linkage (.710”OD) 1993-Up	2	
159074A	Seal, ZF5HP30 Extention Housing (2WD) 2.885”OD (.322” Thick) 1993-Up	1	

PART #	FRICTION CLUTCH	QTY	REFERENCE #
159102A	Friction, ZF5HP30 Overdrive Direct Clutch (.062”) 30 Teeth (5.627”OD) 1993-Up (Also Fits Forward & Overrun Clutch)	5-16	
159104A	Friction, ZF5HP30 Intermediate Clutch (.062”) 30 Teeth (8.007”OD) 1993-Up (Also Fits 4th Clutch, Direct Clutch & Reverse Clutch)	3-17	
159119A	Friction Module, ZF5HP30 1991-Up (For Units Ending In 010/011/029/030/031)	1	
159119AA	Friction Module, ZF5HP30 1991-Up (For Units Ending In 017/027/028/032/039/040)	1	
159119AB	Friction Module, ZF5HP30 1991-Up (For Units Ending In 026)	1	

© Whatever It Takes Transmission Parts. Inc.

PART #	STEEL CLUTCH	QTY	REFERENCE #
159122A	Steel, ZF5HP30 Overdrive Direct Clutch (.071") 24 Teeth (4.688"ID) 1993-Up (Also Fits ZF5HP30 Overrun Clutch)	6-11	
159123A	Use 159129A	1	
159124A	Steel, ZF5HP30 Intermediate Clutch (.118") 32 Teeth (7 3/16"OD) 1993-Up (Also Fits 4th Clutch, Direct Clutch & Reverse Clutch)	3-20	
159125A	Use 159131A	1	
159127A	Use 159131A	1	
159128A	Steel, ZF5HP30 Forward Clutch (.118") 24 Square Teeth (4.690"ID) 1993-Up (Also Fits Overrun Clutch Pressure Plate # 156)	5-10	
159129A	Steel, ZF5HP30 Forward Clutch (.038") 21 Teeth (Waved) 1993-Up (Also Fits Overrun Clutch #136B & Overdrive Direct Clutch #123)	1-3	
159131A	Steel, ZF5HP30 Reverse Clutch (.038") 29 Teeth (Waved) 1993-Up (Also Fits Direct Clutch & Intermediate Clutch)	1-3	
159136B	Use 159129A	5	
159139A	Steel Module, ZF5HP30 1991-Up	1	

PART #	PRESSURE PLATES	QTY	REFERENCE #
159142A	Pressure Plate, ZF5HP30 Overdrive Direct Clutch (.238") (24 Teeth) 1993-Up	1	
159148A	Pressure Plate, ZF5HP30 Forward Clutch (.118") 24 Round Tip Teeth (4.690"ID) 1993-Up	1	
159156A	Use 159128A	1	

PART #	VALVE BODY KITS	QTY	REFERENCE #
159165A	Valve Body Kit, ZF5HP30 1993-Up	1	

PART #	SEALING RINGS	QTY	REFERENCE #
159175A	Ring Kit, ZF5HP30 1993-Up	1	
159179AT	Ring, ZF5HP30 Direct Clutch Hub With Hollow Shaft (Teflon) 1993-Up	2	
159181AT	Ring, ZF5HP30 Stator To Forward/Reverse Drum (Teflon) 1993-Up	2	
159185AT	Ring, ZF5HP30 4th Clutch Drum (Rear) (Teflon) 1993-Up	1	

PART #	WASHERS & BEARINGS	QTY	REFERENCE #
159201A	Bearing Kit, ZF5HP30 (11 Bearings) 1993-Up	1	
159210A	Race, ZF5HP30 Stator Tube To Forward/Reverse Drum (Front) 1993-Up Selective (1.808"OD) 1.035"ID	1	
159211A	Bearing, ZF5HP30 Stator Tube To Forward/Reverse Drum 1993-Up (1.928"OD) 1.065"ID	1	
159212A	Race, ZF5HP30 Stator Tube To Forward/Reverse Drum (Rear) 1993-Up (Cupped) 1.928"OD (1.065"ID)	1	
159214A	Bearing W/Races, ZF5HP30 4th Clutch Drum To Direct Clutch Hub 1993-Up (.155" Thick) 2.922"OD (2.088"ID) Also Fits Direct Clutch Hub With Hollow Shaft To Direct/Intermediate Clutch Housing	1-2	
159219A	Caged Needle Bearing, ZF5HP30 Presses In Overdrive Direct Drum (Cast # HK 3512) 1.655"OD (.467" Thick) 1993-Up	1	
159226A	Use 159214A	1	
159231A	Race, ZF5HP30 Forward/Reverse Drum To Forward Hub With Shaft 1993-Up (Cupped) 1.891"OD (.869"ID)	1	
159232A	Bearing, ZF5HP30 Forward/Reverse Drum To Forward Hub With Shaft 1993-Up (.078" Thick) 1.560"OD (.712"ID)	1	
159235A	Race, ZF5HP30 Forward Clutch Hub To 4th Clutch Drum 1993-Up (Cupped) 1.930"OD (1.065"ID)	1	
159236A	Bearing, ZF5HP30 Forward Clutch Hub To 4th Clutch Drum 1993-Up (.079" Thick) 1.843"OD (1.030"ID)	1	
159237A	Race, ZF5HP30 Forward Sun Gear To Overdrive Planet (Front) 1993-Up (2.720"OD) 1.855"ID (.058" Thick)	1	
159238A	Bearing, ZF5HP30 Forward Sun Gear To Overdrive Planet 1993-Up (2.740"OD) 1.830"ID (.155" Thick)	1	
159239A	Race, ZF5HP30 Forward Sun Gear To Overdrive Planet (Rear) 1993-Up (2.743"OD) 1.850"ID (.040" Thick)	1	
159243A	Race, ZF5HP30 Direct/Intermediate Housing To 2nd Gear Freewheel Inner Race (Cupped) 2.842"OD (1.850"ID) 1993-Up	1	
159244A	Bearing, ZF5HP30 Direct/Intermediate Housing To 2nd Gear Freewheel Inner Race (2.741"OD) 1.820"ID (.157" Thick) 1993-Up	1	

© Whatever It Takes Transmission Parts. Inc.

PART #	WASHERS & BEARINGS	QTY	REFERENCE #
159245A	Race, ZF5HP30 Direct/Intermediate Housing To 2nd Gear Freewheel Inner Race (3.006"OD) 1.854"ID (.080" Thick) 1993-Up	1	
159267A	Shim, ZF5HP30 Parking Gear To Yoke (Selective) 1993-Up	1	
159270AK	Ball Bearing Assembly, ZF5HP30 Extention Housing To Yoke (5 Pieces) 1993-Up	1	
159295A	Caged Needle Bearing, ZF5HP30 Pump Body To Converter Neck 1993-Up (Cast # INA F-216974) .550" Thick (2.042"OD)	1	

PART #	GASKETS & RUBBER COMPONENTS	QTY	REFERENCE #
159300AF	Pan Gasket, ZF5HP30 RWD (Fiber) 1993-Up	1	
183311A	O-Ring, ZF5HP30 Pump Body To Pump Cover 1993-Up	1	
159348A	O-Ring, ZF5HP30 Extention Housing To Case 1993-Up	1	
159380A	O-Ring, ZF5HP30 Input Shaft To Forward/Reverse Drum 1993-Up	1	
159381A	O-Ring, ZF5HP30 Pump Cover To Case 1993-Up	1	

PART #	TECHNICAL MANUALS	QTY	REFERENCE #
159400A	Repair Manual, ZF5HP30 RWD	1	
159400A-1	Valve Body Manual, ZF5HP30 RWD	1	
159400AFD	Manual, ZF5HP30 Functional Description	1	

PART #	ELECTRICAL COMPONENTS	QTY	REFERENCE #
159420A	Solenoid Kit, ZF5HP30 (For Units Ending In 017/026/027/028/032/039/040) 1993-Up	1	
159420B	Solenoid, Kit, ZF5HP30 (For Units Ending In 010/011/029/030/031) 1993-Up	1	
159436A	Sensor, ZF5HP30 Output Speed (2 Prong) Cast # 0501 310 401 (Reads Off Of #690) Also Input Speed Reads Off Of #576	1-2	
159438A	Use 159436A	1	
159446A	Wire Harness, ZF5HP30 Internal (16 Pin Connector With 8 Three Wire Connectors And 2 Two Wire Connectors) 1993-Up	1	
159495A	Oil Tube, ZF5HP30 Valve Body To Pump Cover (Aluminum) 1993-Up	2	

PART #	HARD PARTS	QTY	REFERENCE #
159510A	Pump Body, ZF5HP30 With Gears (10 Bolts To Pump Cover) 1993-Up	1	
159520A	Pump Cover, ZF5HP30 (Aluminum) 14 Bolts To Case (10 3/8"OD) (2.235" Thick) 1993-Up	1	
159528A	Stator Support, ZF5HP30 (Aluminum) 10 3/8"OD (1.260"ID) 1993-Up (.650" Thick At The Edge)	1	

PART #	PUMP COMPONENTS	QTY	REFERENCE #
159529A	Stator Tube, ZF5HP30 (6 1/8" Long) 5 Bolt 1993-Up	1	
159530A	Pump Gear Set, ZF5HP30 (14 Teeth On Inner Gear) (.552" Thick) 1993-Up	1	

PART #	HARD PARTS (Continued)	QTY	REFERENCE #
159550A	Drum, ZF5HP30 4th Clutch (5 Clutch) Stamped Steel 1993-Up	1	
159551A	Drum, ZF5HP30 Overdrive Direct Clutch (Aluminum) 6 Clutch (6 3/8"OD) Cast # 1055 476 036-7BF1 (12 Bolts To Case) 1993-Up	1	
159556A	Drum, ZF5HP30 Forward/Reverse Clutch (Aluminum) (9"OD) 1993-Up Uses 5 24 Teeth Forward Steels & Three 32 Teeth Reverse Steels	1	
159558A	Housing, ZF5HP30 Direct/Intermediate & Overrun Clutch (8 9/16"OD) 1993-Up	1	
159560A	Piston Kit, ZF5HP30 4th Clutch 1993-Up	1	
159561A	Piston Kit, ZF5HP30 Overdrive Clutch (Bonded) 1993-Up	1	
159562A	Piston Kit, ZF5HP30 Intermediate Clutch (Aluminum) 1993-Up	1	
159564A	Piston Kit, ZF5HP30 Forward Clutch (Cast # 1055 470 064) 1993-Up	1	
159565A	Piston Kit, ZF5HP30 Direct Clutch (Bonded) 1993-Up	1	
159566A	Piston Kit, ZF5HP30 Reverse Clutch (Cast # 1055 470 083) 1993-Up	1	
159568A	Piston Kit, ZF5HP30 Overrun Clutch (Bonded Pistons) 1993-Up	1	
159570A	Hub, ZF5HP30 4th Clutch (30 Clutch Teeth) (1.530" Thick) 1993-Up	1	
159571A	Hub, ZF5HP30 Overdrive Clutch (With 1st Gear Freewheel Outer Race) (30 Clutch Splines) 1993-Up	1	
159572A	Hub, ZF5HP30 Intermediate Clutch (Aluminum) (30 Clutch Splines) 1993-Up	1	
159575A	Hub W/Hollow Shaft, ZF5HP30 Direct Clutch (9"OD) 1993-Up	1	
159576A	Hub, ZF5HP30 Reverse Clutch (With 30 Clutch Teeth) (8 7/8"OD) 1993-Up	1	
159580A	Planet W/Shaft, ZF5HP30 Overdrive (4 Gear, 1 Groove) 1993-Up (Uses 32 Teeth Sun Gear)	1	

© Whatever It Takes Transmission Parts. Inc.

159582A ..... Planet, ZF5HP30 Forward (4 Gear, 1 Groove) (24 Lugs) 1993-Up
..... (Uses A 40 Teeth Sun Gear #612) ..... 1 .....
159584A ..... Planet W/Shaft, ZF5HP30 Output (5 Gear, 1 Groove) 1993-Up
..... (Uses A 38 Teeth Sun Gear) ..... 1 .....
159590A ..... Ring Gear, ZF5HP30 Overdrive Planet (108 Teeth) (24 Lugs) 1993-Up ..... 1 .....
159592A ..... Ring Gear, ZF5HP30 With Shell, Forward Planet (100 Teeth) 1993-Up
..... (30 Outer Splines) (7 1/8"OD) ..... 1 .....
159594A ..... Ring Gear, ZF5HP30 Output Planet (97 Teeth) (15 Lugs) 1993-Up ..... 1 .....
159612A ..... Sun Gear, ZF5HP30 Forward Planet (40 Teeth, 1 Groove) 1993-Up
..... (.904" Thick) (2.620"OD) ..... 1 .....
159614A ..... Sun Gear, ZF5HP30 Overdrive & Output Planet (32 Teeth/38 Teeth No Groove)
..... (2.498" Long) 1993-Up ..... 1 .....
159650A ..... Freewheel, ZF5HP30 1st Gear With End Caps (30 Elements) 1993-Up
..... (1/2 Plastic & 1/2 Metal Cage) ..... 1 .....
159652A ..... Freewheel, ZF5HP30 2nd Gear With End Caps (24 Elements) 1993-Up
..... (.510" Thick) (1/2 Plastic & 1/2 Metal Cage) ..... 1 .....

PART #	SPRAGS & ONE WAY CLUTCHES	QTY	REFERENCE #

159660A ..... Inner Race, ZF5HP30 1st Gear Freewheel (2.845"OD) (1.250" Thick) 1993-Up ..... 1 .....
159662A ..... Inner Race, ZF5HP30 2nd Gear Freewheel (1.019" Thick) 1993-Up ..... 1 .....
159663A ..... Outer Race, ZF5HP30 2nd Gear Freewheel (30 Clutch Splines)
..... (1.220" Thick) (3.760"ID) 1993-Up ..... 1 .....

PART #	HARD PARTS (Continued)	QTY	REFERENCE #

159670A ..... Shaft, ZF5HP30 Input (9 7/8" Long) (27 Converter Splines) 1993-Up ..... 1 .....
159674A ..... Hub W/Shaft, ZF5HP30 Forward Clutch (30 Teeth Clutch Splines) 1993-Up ..... 1 .....
159690A ..... Parking Gear, ZF5HP30 (18 Lugs, 36 Teeth Reluctor) 1993-Up ..... 1 .....
159694A ..... Retainer, ZF5HP30 1st Gear Freewheel (Brass) 1993-Up
..... (3.778"OD) (2.285"ID) ..... 1 .....
159695A ..... Spacer, ZF5HP30 2nd Gear Freewheel (Brass) 1993-Up ..... 1 .....
159697A ..... Sleeve, ZF5HP30 Forward/Reverse Drum To Stator Tube 1993-Up
..... (.844" Thick) (2.046"ID) ..... 1 .....
159697B ..... Sleeve, ZF5HP30 Direct/Intermediate Clutch Housing 1993-Up
..... (1.455" Thick) 2.953"OD (2.045"ID) ..... 1 .....
159699A ..... Waved Spacer, ZF5HP30 Front Seal To Caged Needle Bearing 1993-Up
..... (.060" Thick) (2.045"OD) ..... 1 .....
159699B ..... Flat Spacer, ZF5HP30 Caged Needle Bearing To Pump Body 1993-Up
..... (.185" Thick) 1.925"OD (1.575"ID) ..... 1 .....
159740A ..... Valve Body, ZF5HP30 (8 Solenoids) (Aluminum) 1993-Up ..... 1 .....
159741AP-1 .... Valve, ZF5HP30 Pressure Regulator (Updated)(Keeps Pressure From Spiking & Braking Forward
..... Drum) ..... 1 .....
159742A ..... Secondary Valve Body, ZF5HP30 (BMW/Jaguar) Lower Front Section ..... 1 .....
159757A ..... Side Cover, ZF5HP30 (Aluminum) 9 Bolt (With 3 Torx Plugs) 1993-Up ..... 1 .....
159757AA ..... Side Cover, ZF5HP30 (Aluminum) 9 Bolt (With 2 Threaded Holes For Flared
..... Lines) 1993-Up ..... 1 .....
159760A ..... Case, ZF5HP30 (Starter At 3:00) 7 3/4" Top Bolts (28 1/4" Long) 1993-Up
159765A ..... Pan, ZF5HP30 Bottom (Aluminum) With Drain Plug (20 Bolt) 1993-Up ..... 1 .....
159770A ..... Extention Housing, ZF5HP30 2WD (5 Bolts To Case) With 2 Mounting
..... Slots 1993-Up ..... 1 .....
159777AK ..... Bolt Set, ZF5HP30 Pump Cover To Case (14 Pieces) 1993-Up ..... 1 .....
159778AK ..... Bolt Set, ZF5HP30 Stator Support To Body (9 Pieces) 1993-Up ..... 1 .....
159778BK ..... Bolt Set, ZF5HP30 Stator Tube To Stator Support (5 Pieces) 1993-Up ..... 1 .....
159781AK ..... Bolt Set, ZF5HP30 Extention Housing To Case (5 Pieces) 1993-Up ..... 1 .....
159782AK ..... Bolt Set, ZF5HP30 Valve Body To Case (12 Pieces) 1993-Up ..... 1 .....
159783AK ..... Bolt Set, ZF5HP30 Center Support To Case (3 Pieces) 1993-Up ..... 1 .....
159790AK ..... Bolt Set, ZF5HP30 Overdrive Direct Drum To Case (12 Pieces) 1993-Up ..... 1 .....
159798A ..... Nut, ZF5HP30 Output Shaft Yoke (6 Notches) (Right Hand Thread) 1993-Up ..... 1 .....
159841A ..... Yoke, ZF5HP30 Output Shaft (3 Bolt) (5.945" Long) 1993-Up ..... 1 .....
159843A ..... Clip, ZF5HP30 Holds Case Connector To Case 1993-Up ..... 1 .....
159861A ..... Snap Ring, ZF5HP30 Holds 4th Clutches In Drum 1993-Up (8 3/8"OD)
..... (.125" Thick) Also Fits Intermediate Clutch #873) ..... 1-2 .....
159862A ..... Use 159877A ..... 1 .....
159863A ..... Snap Ring, ZF5HP30 Holds Caged Needle Bearing In Overdrive Direct
..... Drum (.057" Thick) (1.737"OD) 1993-Up ..... 1 .....
159864A ..... Use 159876A ..... 1 .....
159865A ..... Snap Ring, ZF5HP30 Holds 1st Gear Freewheel To Overdrive Direct
..... Drum (2.354"OD) (.041" Thick) 1993-Up ..... 1 .....

© Whatever It Takes Transmission Parts. Inc.

PART #	HARD PARTS (Continued)	QTY	REFERENCE #
159866A	Snap Ring, ZF5HP30 Holds 1st Gear Freewhell To Clutch Hub (.076" Thick) (4.010"OD) 1993-Up	1	
159868A	Use 159889A	1	
159870A	Use 159876A	1	
159873A	Use 159861A	1	
159874A	Use 159893A	1	
159876A	Snap Ring, ZF5HP30 Holds Forward Clutch Pressure Plate In 1993-Up (Selective) (6"OD) Also Fits Overrun Clutch #870 (Also Fits Overdrive Direct Clutch #864)	1-2	
159877A	Snap Ring, ZF5HP30 Holds Forward Clutch Piston Springs In Drum 1993-UP (.098" Thick) 1.885"OD (With 2 Eyelets) Also Holds 4th Clutch Piston Retainer In Drum #862	1-2	
159878A	Snap Ring, ZF5HP30 Holds Direct Clutch Pressure Plate In Drum 1993-Up (.131" Thick) (8 3/8"OD)	1	
159880A	Snap Ring, ZF5HP30 Holds 2nd Gear Freewheel To Outer Race (4.225"OD) (.076" Thick) 1993-Up	1	
159881A	Snap Ring, ZF5HP30 Holds Sleeve To Forward/Reverse Drum (.059" Thick) 1993-Up	1	
159882A	Snap Ring, ZF5HP30 Holds Overdrive Ring Gear To Forward Planet (.077" Thick) (6 5/8"OD) 1993-Up	1	
159883A	Snap Ring, ZF5HP30 Holds Direct Sleeve (# 697B) To Housing 1993-Up (.076" Thick) (3.118"OD)	1	
159889A	Snap Ring, ZF5HP30 Holds Overdrive Planet Ring Gear To Shell #592 (.096" Thick) (7 1/8"OD) 1993-Up (Also Holds Output Ring Gear To Shell #868)	1-2	
159892A	Snap Ring, ZF5HP30 Holds Reverse Clutch Pressure Plate In Drum 1993-Up (Selective) (8 5/16"OD)	1	
159893A	Snap Ring, ZF5HP30 Holds Reverse Clutch Piston Springs In 1993-Up (6 5/16"OD) .116" Thick (Also Fits Intermediate Clutch # 874)	1-2	
159897A	Snap Ring, ZF5HP30 Holds Bearing #270K To Extention Housing) 1993-Up (.117" Thick) 3.640"OD (With 2 Eyelets)	1	
159898A	Snap Ring, ZF5HP30 Holds Front Seal To Body 1993-Up	1	
159960A	Piston, ZF5HP30 4th Clutch (Aluminum) 7 7/8"OD (2.005"ID) 1993-Up	1	
159961A	Use 185961B	1	
185961B	Piston, ZF5HP30 (F Clutch # 961) (Bonded)(.980" Thick)(5.578"OD)(2.315"ID) 1993-Up	1	
159961AK	Piston Kit, ZF5HP30 (BMW) 1993-Up (Bonded) (Contains: #961, 965 & 968)	1	
159962A	Piston, ZF5HP30 Intermediate Clutch (Aluminum) (18 Lugs) 1993-Up (.595" Thick) 8 1/16"OD (6 5/16"ID)	1	
159964A	Piston, ZF5HP30 Forward Clutch (Aluminum) (Cast # 1055 470 064) 1993-Up (5.585"OD) (1.823"ID)	1	
159965A	Piston, ZF5HP30 Direct Clutch (Bonded) 1993-Up	1	
159966A	Piston, ZF5HP30 Reverse Clutch (Aluminum) (Cast # 1055 470 083) 1993-Up (8 1/16"OD) 6 5/16"ID (.402" Thick)	1	
159968A	Piston, ZF5HP30 Overrun Clutch (Bonded) (5.355"OD) 1993-Up	1	
159970A	Spring, ZF5HP30 4th Clutch Return (8 Fingers) (.065" Thick) 1993-Up	1	
159971A	Spring, ZF5HP30 Overdrive Direct Clutch Return (12 Fingers) 1993-Up (.078" Thick) (5.035"OD)	1	
159972A	Use 159976A	1	
159974A	Spring, ZF5HP30 Forward Clutch Return (12 Fingers) 1993-Up (.063" Thick) (3.915"OD)	1	
159975A	Spring, ZF5HP30 Direct Clutch Return (12 Fingers) 1993-Up (.055" Thick) (5.100"OD)	1	
159976A	Spring, ZF5HP30 Reverse Clutch Return (24 Fingers) (7 1/2"OD) 1993-Up (Also Fits Intermediate Clutch Return #972)	1-2	
159978A	Spring, ZF5HP30 Overrun Clutch Return (10 Fingers) 1993-Up (4.875"OD) (.065" Thick)	1	
159980A	Retainer, ZF5HP30 4th Clutch Return Spring (5.418"OD) 1993-Up	1	
159981A	Retainer, ZF5HP30 Overdrive Clutch Return Spring (2 Pieces) 1993-Up	1	
159982A	Use 159986A	1	
159984A	Retainer, ZF5HP30 Forward Clutch Return Spring 1993-Up (5.110"OD) (1.730"ID)	1	
159985A	Retainer, ZF5HP30 Holds Direct Clutch Return Spring In 1993-Up (2 Pieces) Also Fits Overrun Clutch #988	1-2	
159986A	Retainer, ZF5HP30 Reverse Clutch Spring Snap Ring (Stepped) 1993-Up (6 9/16"OD) .132" Thick (Also Fits Intermediate Clutch #982)		
159988A	Use 159985A	1	
159991A	Linkage Assembly, ZF5HP30 Internal (6 Pieces) 1993-Up	1	
159995A	Park Pawl Assembly, ZF5HP30 (3 Pieces) 1993-Up	1	

© Whatever It Takes Transmission Parts. Inc.

© Whatever It Takes Transmission Parts. Inc.

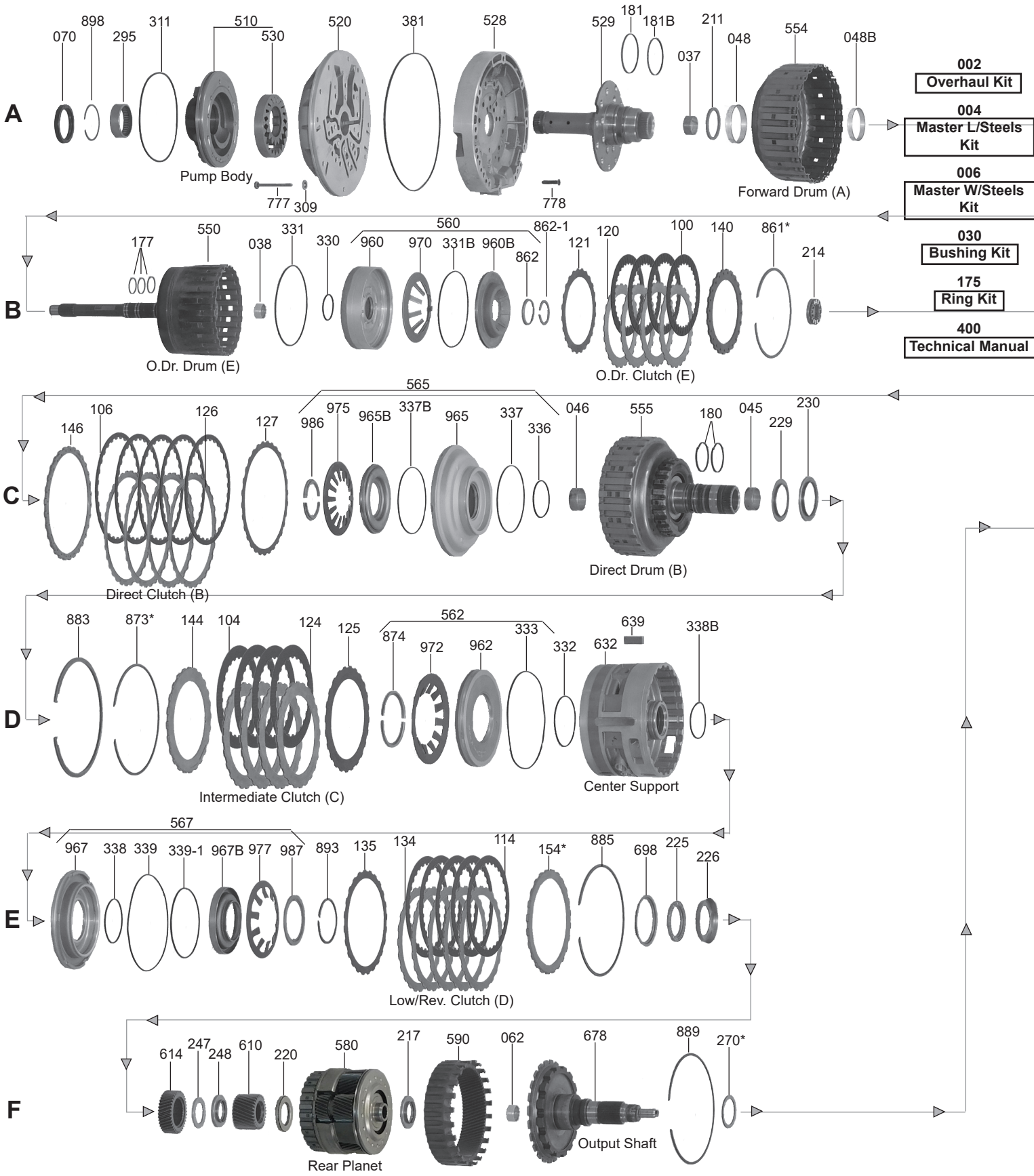

© Whatever It Takes Transmission Parts. Inc.

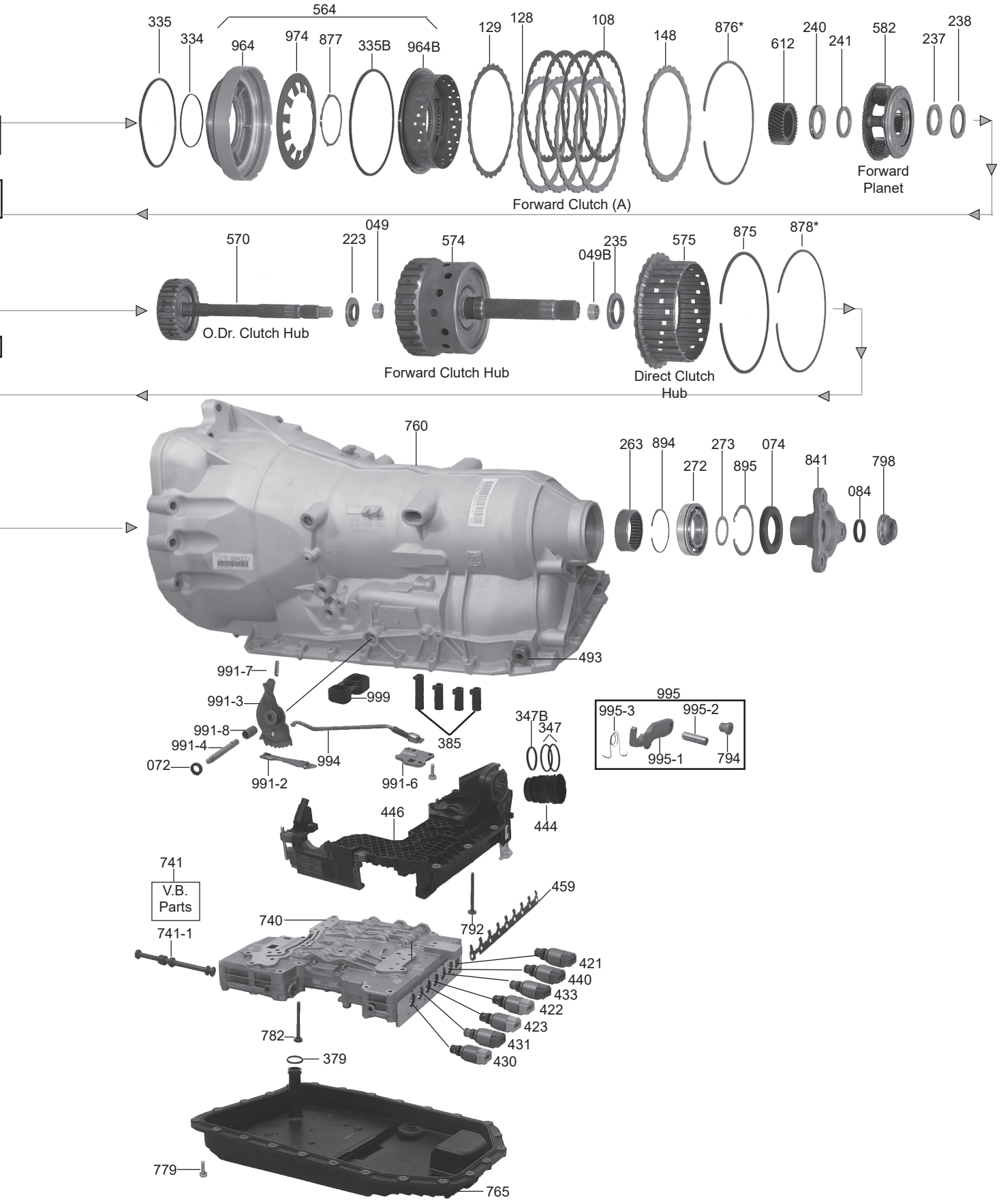

© Whatever It Takes Transmission Parts. Inc.

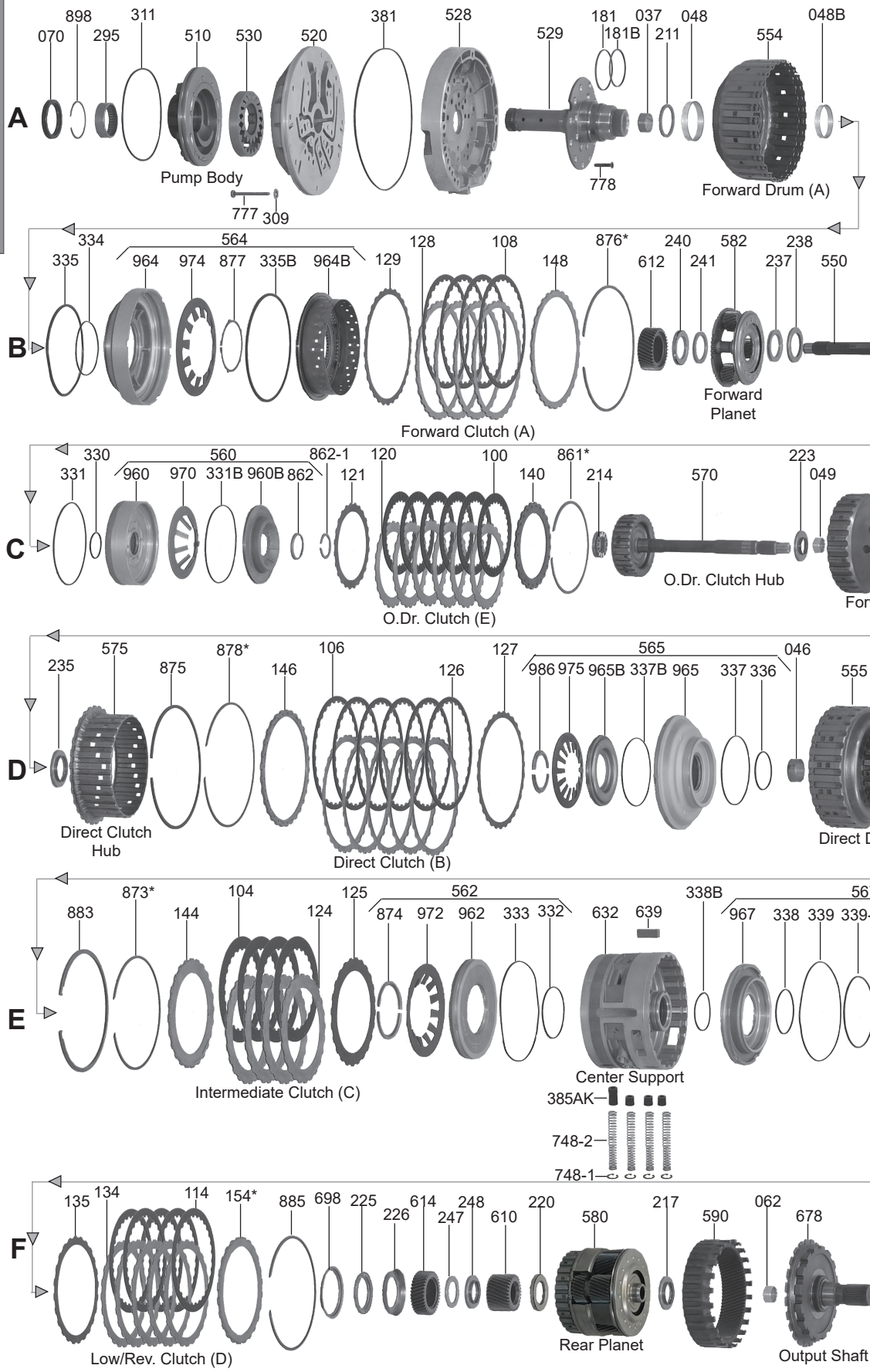

002 Overhaul Kit
004 Master L/Steels Kit
006 Master W/Steels Kit
030 Bushing Kit
175 Ring Kit
400 Technical Manual

© Whatever It Takes Transmission Parts. Inc.

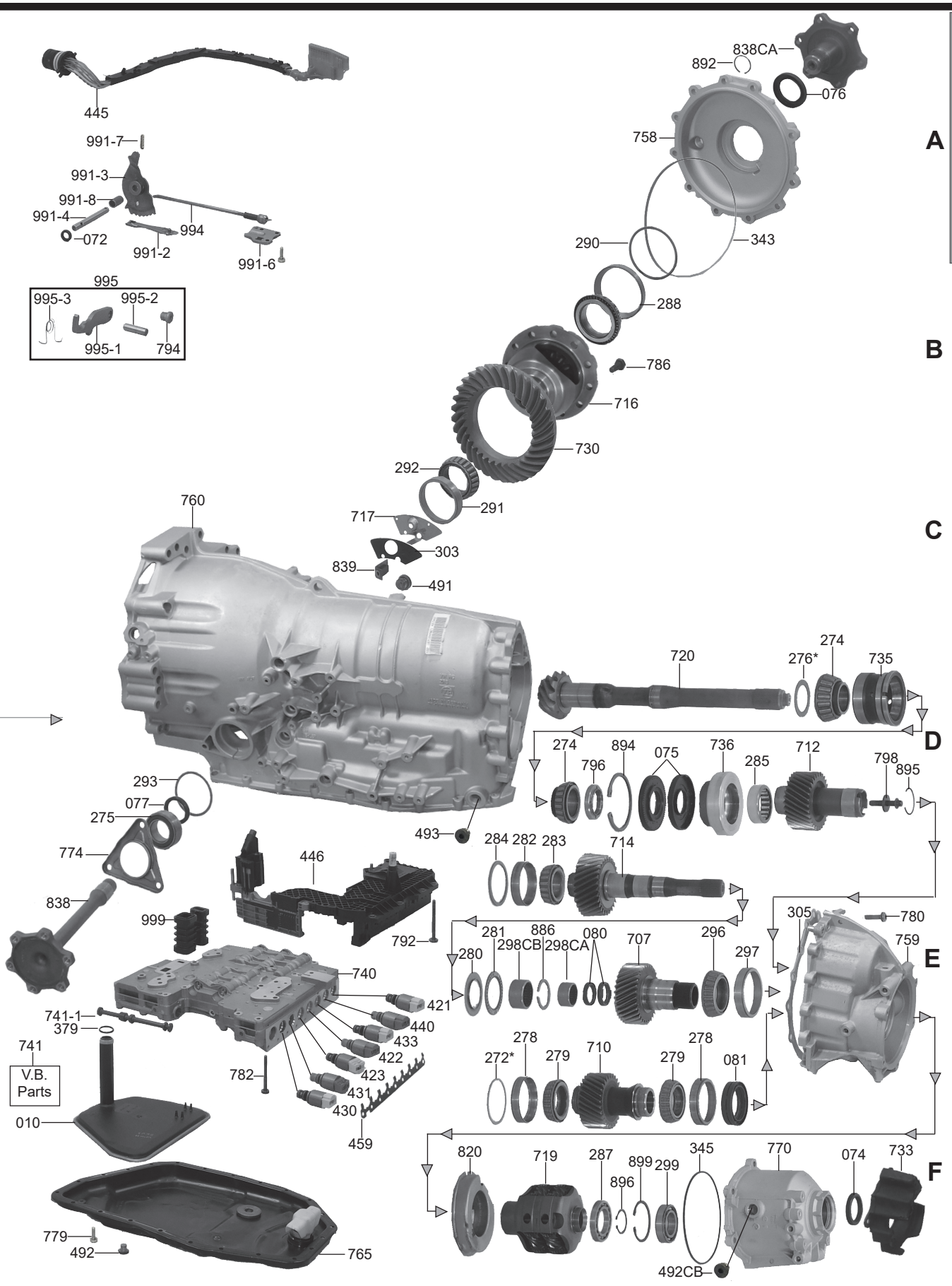

© Whatever It Takes Transmission Parts. Inc.

ZF

PART #	OVERHAUL KITS	QTY	REFERENCE #
209002A	Overhaul Kit, ZF6HP19/19X/21/21X(Audi & BMW) 2004-Up	1	
209002AA	Overhaul Kit, ZF6HP19A(Audi) 2004-Up	1	
209002AX	Overhaul Kit, ZF6HP19/19X/21/21X (Audi/BMW/Hyundai/Jaguar) 2004-Up	1	

PART #	MASTER L/STEELS KITS	QTY	REFERENCE #
209004A	Master L/Steels Kit, ZF6HP19/19X	1	
209004AA	Master L/Steels Kit, ZF6HP19A(Audi) 2004-Up	1	
209004AX	Master L/Steels Kit, ZF6HP19/19X/21/21X (AUDI/BMW) 2004-Up	1	
209004D	Master L/Steels Kit, ZF6HP21/21X 2006-Up	1	

PART #	MASTER W/STEELS KITS	QTY	REFERENCE #
209006A	Master W/Steels Kit, ZF6HP19/19X	1	
209006AA	Master W/Steels Kit, ZF6HP19X (Fits Units Ending In; 008)	1	
209006AB	Master W/Steels Kit, ZF6HP19A(Audi) 2004-Up	1	
209006D	Master W/Steels Kit, ZF6HP21/21X	1	
209006DA	Master W/Steels Kit, ZF6HP21/21X	1	

PART #	FILTERS	QTY	REFERENCE #
209010AA	Filter, ZF6HP19A (VW/Audi) AWD (4 3/4" Neck) 2004-Up	1	

PART #	BUSHINGS	QTY	REFERENCE #
209030A	Bushing Kit, ZF6HP19/21 RWD 2002-Up (10 Pieces)	1	
209034AA	Bushing, ZF6HP19A (VW/AUDI) Pump 2004-Up	1	
209036A	BushingZF6HP19/HP21 Stator Support (Front) 2004-Up	1	
209037A	Bushing, ZF6HP19/19X/21 Stator Tube (Rear)(1.020"ID)(Bronze)	1	
209037AK	Bushing, ZF6HP19//6HP21 Stator Tube (Rear)(Fits 1.023" Input Shaft Only	1	
209038A	Bushing, ZF6HP19/19X/21 Overdrive Clutch Drum (.755"OD)(Brass)(.420"Wide) 2004-Up (Also Fits ZF6HP19/19X/21 O.P. Shaft 2004-Up)	1	
209045A	Bushing, ZF6HP19/19X/21 Direct Clutch Drum (Rear)(1.343"OD)(Brass) 2004-Up	1	
209046A	Bushing, ZF6HP19/19X/21 Direct Clutch Drum (Front)(1.519"OD)(Brass) 2004-Up	1	
49048A	Bushing, ZF6HP19/19X/21 Forward Clutch Drum (Front)(2.350"ID) 2004-Up	1	
49048B	Bushing, ZF6HP19/19X/21 Forward Clutch Drum (Rear)(1.970"ID) 2004-Up	1	
209049A	Bushing, ZF6HP19/19X/21 Forward Clutch Hub (Front)(1.027"OD) 2004-Up	1	
209049B	Bushing, ZF6HP19/19X/21 Forward Clutch Hub (Rear)(.973"OD)(.907"ID) 2004-Up	1	

PART #	METAL CLAD SEALS	QTY	REFERENCE #
209070A	Seal, ZF6HP19/21 Front Pump 2000-Up	1	
69072	Seal, ZF6HP19/19X/21 Linkage 2004-Up	1	
209074A	Seal, ZF6HP19/21 Rear (2WD)(2.840"OD)(.310"Thick)(Cast # ZF0734 319 633) 2004-Up	1	
209074C	Seal, ZF6HP19X Rear (AWD)(2.050"OD)(.280"Thick) 2004-Up	1	
209075C	Seal, ZF6HP19X Pinion (3.475"OD)(.455"Thick)(1.455"ID)(Cast # 0234 318 528) 2004-Up	1	
209076C	Seal, ZF6HP19X Axle (Pass. Side)(2.375"OD)(1.530"ID)(Cast # 0734 319 645) 2004-Up	1	
209077C	Seal, ZF6HP19X Axle (Driver Side)(1.855"OD)(.315"Thick)(Cast # 0734 319 703) 2004-Up	1	
209080C	Seal, ZF6HP19X Inside Transfer Gear (1.516"OD)(Back To Back)(.330"Thk At Pads) 2004-Up	2	
209081C	Seal, ZF6HP19X Drive Gear (Rear)(2.485"OD)(Back To Back)(.590"Thick Snapped Together) 2004-Up	1	
209084A	Seal, ZF6HP19/21 Yoke (2WD)(1.400"OD)(.210"Thick)(Cast # ZF0734 310 418) 2004-Up	1	

PART #	FRICTION CLUTCHS	QTY	REFERENCE #
209100A	Fri, ZF6HP19 Overdrive Clutch (E)(30 Teeth)(.062"Thick)(56 Grooves) 2004-06	4	
209100C	Fri, ZF6HP19X/21 Overdrive Clutch (E)(30 Teeth)(.062"Thick)(40 Grooves) 2004-Up	6	
209104A	Fri, ZF6HP19/19X/21 Intermediate Clutch (C)(6.095"OD)(.062"Thick) 2004-Up	4	
209106A	Fri, ZF6HP19/19X/21 Direct Clutch (B)(6 5/8"OD)(.084"Thick)(30 Teeth) 2004-Up	5-6	
209108A	Fri, ZF6HP19/19X/21 Forward Clutch (A)(.062"Thick)(30 Teeth)(6 5/8"OD) 2004-Up	4	
209114A	Fri, ZF6HP19/19X/21 Low/Rev Clutch (D)(5.935"OD)(.062"Thick)(30 Teeth) 2004-Up	5	
209119A	Fri Module, ZF6HP19/19A/19X 2004-Up	1	
209119D	Fri Module, ZF6HP21/21X 2006-Up	1	

PART #	STEEL CLUTCHS	QTY	REFERENCE #
209120A	Steel, ZF6HP19 Overdrive Clutch (E)(.083"Thick) 2004-Up	4	
209120C	Steel, ZF6HP19X/21 Overdrive Clutch (E)(.058"Thick)(24 Teeth)(3.816"ID) 2004-Up	6	

© Whatever It Takes Transmission Parts. Inc.

209121A ..... Cushion, ZF6HP19/19X/21 Overdrive Clutch (E)(Waved)(.030"Thick)(3.978"ID)(24 Teeth) 2004-Up 1
209124A ..... Steel, ZF6HP19/19X/21 Intermediate Clutch (C)(4.680"ID)(24 Teeth)(.098"Thick) 2004-Up 4
209125A ..... Cushion, ZF6HP19/19X/21 Intermediate Clutch (C)(4.725"ID)(Waved)(24 Teeth)(.039"Thick) 2004-Up 1
209126A ..... Steel, ZF6HP19/19X/21 Direct Clutch (B)(6.055"ID)(30 Teeth)(.093"Thick) 2004-Up 4-5
209127A ..... Cushion, ZF6HP19/19X/21 Direct Clutch (B)(6.055"ID)(Waved)(30 Teeth)(.041"Thick) 2004-Up 1
209128A ..... Steel, ZF6HP19/19X/21 Forward Clutch (A)(6.055"ID)(30 Teeth)(.118"Thk) 2004-Up (Also Fits ZF6HP19/19X/21 Forward Pressure Plate (Rear) 2004-Up) 5
209129A ..... Cushion, ZF6HP19/19X/21 Forward Clutch (Waved)(6.060"ID)(30 Teeth)(.041"Thick) 2004-Up 1
209134A ..... Steel, ZF6HP19/19X/21 Low/Reverse Clutch (D)(5.083"ID)(.070"Thick)(24 Teeth) 2004-Up 1
209135A ..... Cushion, ZF6HP19/19X/21 Low/Reverse Clutch (D)(5.130"ID)(.033"Thk)(24 Teeth) 2004-Up 1
209139A ..... Steel Module, ZF6HP19 2004-Up 1
209139AA ..... Steel Module, ZF6HP19A/19X/21/21X 2004-Up 1

PART #	PRESSURE PLATES	QTY	REFERENCE #

209140A ..... Pressure Plate, ZF6HP19 Overdrive Clutch (E)(24 Teeth)(.137"Thick)(No Dimples) 2004-06 1
209140C ..... Pressure Plate, ZF6HP19X/21 Overdrive Clutch (E)(24 Teeth)(.126/.166"Thick)(24 Dimples) 2004-Up 1
209144A ..... Pressure Plate, ZF6HP19/19X/21 Intermediate Clutch (C)(4.680"ID)(24 Teeth)(.137"Thick) 2004-Up 1
209146A ..... Pressure Plate, ZF6HP19 Direct Clutch (B)(Top)(6.060"ID)(.116"Thick)(No Dimples) 2004-06 1
209146C ..... Pressure Plate, ZF6HP19X/21 Direct Clutch (B)(Top)(6.060"ID)(.116"/.163"Thick)(Dimpled) 2004-Up 1
209154A ..... Pressure Plate, ZF6HP19/19X/21 Low/Reverse Clutch (D)(5.085"ID)(.137"Thick)(24 Teeth) 2004-Up 1

PART #	SEALING RINGS	QTY	REFERENCE #

209175A ..... Ring Kit, ZF6HP19/19X/21/21X 2000-Up (8 Teflon/2 Metal) 1
209175AA ..... Ring Kit, ZF6HP19A(VW/Audi) 2004-Up 1
209177A ..... Ring, ZF6HP19/19X/21 Input Shaft (Overdrive Drum W/Shaft)(.975"OD)(Double Lap Joint) 2004-Up 3
209180A ..... Ring, ZF6HP19/19X/21 Direct Clutch Drum (1.760"OD)(.104"Thick) 2004-Up 2
209181A ..... Ring, ZF6HP19/19X/21 Stator To Forward Drum (2.383"OD)(Metal)(.098"Thick)(Lock Tabs) 2004-Up 1
209181B ..... Ring, ZF6HP19/19X/21 Stator To Forward Drum (2.215"OD)(Metal)(.098"Thick)(Lock Tabs) 2004-Up 1

PART #	WASHERS & BEARINGS	QTY	REFERENCE #

49211AA ..... Shim, ZF6HP19/19X/21 Stator To Forward Sun Gear (.100"Thick)(1.930"OD)(1.600"ID) 2004-Up 1
49211AB ..... Shim, ZF6HP19/19X/21 Stator To Forward Sun Gear (.108"Thick)(1.930"OD)(1.600"ID) 2004-Up 1
49211AC ..... Shim, ZF6HP19/19X/21 Stator To Forward Sun Gear (.116"Thick)(1.930"OD)(1.600"ID) 2004-Up 1
49211AD ..... Shim, ZF6HP19/19X/21 Stator To Forward Sun Gear (.124"Thick)(1.930"OD)(1.600"ID) 2004-Up 1
209214A ..... Bearing W/Race, ZF6HP19/19X/21 Overdrive Drum To Overdrive Clutch Hub (1.390"OD) (.283"Thick)(14 Needles) 2004-Up 1
209223A ..... Bearing W/Race, ZF6HP19/19X/21 Overdrive Clutch Hub To Forward Hub (1.755"OD)(.908"ID) 2004-Up 1
209225A ..... Bearing W/Race, ZF6HP19/19X/21 Center Support To Rear Planet (2.415"OD)(.137"/.264"Thick) 2004-Up 1
209226A ..... Race, ZF6HP19/19X/21 Bearing To Front Sungear (2.800"OD)(.038"/.415"Tall)(Cupped) 2004-Up 1
209229A ..... Race, ZF6HP19/19X/21 Direct Clutch Drum To Center Support Bearing (2.550"OD) (.039"/.172"Thick) 2004-Up 1
209299C ..... Ball Bearing, ZF6HP19X Flange To Extension Housing (11 Balls)(2.440"OD)(.550"Thick) (Cast # SKF 6007/C3) 2004-Up 1
209230A ..... Bearing W/Race, ZF6HP19/19X/21 Direct Drum To Center Support (2.670"OD)(2.008"ID) 2004-Up 1
209235A ..... Bearing W/Race, ZF6HP19/19X/21 Forward Hub To Direct Drum (2.155"OD)(1.440"ID) 2004-Up 1
209237A ..... Race, ZF6HP19/19X/21 Forward Planet To Bearing (1.315"ID)(1.905"OD) 2004-Up 1
209238A ..... Bearing W/Race, ZF6HP19/19X/21 Forward Planet To Overdrive Drum (2.035"OD)(22 Needles) (.159"Thick) 2004-Up 1

© Whatever It Takes Transmission Parts. Inc.

PART #	WASHERS & BEARINGS (Continued)	QTY	REFERENCE #
209240A	Bearing W/Races, ZF6HP19/19X/21 Forward Sun Gear To Planet (2.035”OD)(.160”Thick) 2004-Up	1	
209241A	Race, ZF6HP19/19X/21 Bearing To Planet (2.035”OD)(.030”/.142”Thick) 2004-Up	1	
209247A	Race, ZF6HP19/19X/21 Between Rear Sun Gears (1.870”OD)(.122”Thick) 2004-Up	1	
209248A	Bearing W/Races, ZF6HP19/19X/21 Between Rear Sun Gears (1.950”OD)(.196”Thick) 2004-Up (Also Fits ZF6HP19/19X/21 Sungear To Planet 2004-Up)(Also Fits ZF6HP19/19X/21 Planet To Output Shaft 2004-Up)	1	
209263A	Caged Needle Bearing, ZF6HP19/21 Case To Ball Bearing (2.480”OD)(.780”Thick) (Cast # INA F-233285.1) 2004-Up	1	
209270A	Shim, ZF6HP19/19X/21 Output Shaft To Case Bearing (.069”Thick)(1.730”OD)(1.385”ID) 2004-Up	1	
209270AA	Shim, ZF6HP19/19X/21 Output Shaft To Case Bearing (.078”Thick)(1.730”OD)(1.385”ID) 2004-Up	1	
209270AB	Shim, ZF6HP19/19X/21 Output Shaft To Case Bearing (.086”Thick)(1.730”OD)(1.385”ID) 2004-Up	1	
209272A	Ball Bearing, ZF6HP19/21 Rear Case (2.835”OD)(9 Balls)(.665”Thick)(Cast #s 6207,6207CS11 & 031123) 2004-Up	1	
209272C	Shim, ZF6HP19X Case To Drive Gear Race (.055”Thick)(2.920”OD) 2004-Up	1	
209273A	Shim, ZF6HP19/21 Ball Bearing To Yoke (1.735”OD)(.039”Thick) 2004-Up	1	
209274C	Bearing, ZF6HP19X Pinion Shaft (Tapered)(18 Rollers)(1.625”ID) 2004-Up	1	
209274CA	Bearing, ZF6HP19X Pinion Shaft (Tapered)(19 Rollers)(1.625”ID) 2004-Up	1	
209275C	Ball Bearing, ZF6HP19X Axle Flange To Case (2.440”OD)(.865”Thick)(Driver Sides) (Cast # FAG 805281) 2004-Up	1	
209276C	Shim, ZF6HP19X Pinion To Bearing (2.350”OD)(.055”Thick) 2004-Up	1	
209278C	Race, ZF6HP19X Case To Drive Gear (2.952”OD)(.550”Thick)(Cast # SKF LM503310/9CL7C) 2004-Up (Also Fits 6HP19X Drive Gear To Rear Case 2004-Up)	1	
209279C	Bearing, ZF6HP19X Case To Drive Gear (25 Rollers)(1.810”ID)(Cast # SKF LM503349/9CL7C) 2004-Up (Also Fits 6HP19X Drive Gear To Rear Case 2004-Up)	1	
209280C	Race, ZF6HP19X Driven Gear To Transfer Gear (2.547”OD)(.031”/.142”Thick) 2004-Up	1	
209281C	Needle Brg, ZF6HP19X Driven Gear To Transfer Gear (.118”Thick)(2.545”OD) 2004-Up	1	
209282C	Race, ZF6HP19X Driven Gear To Rear Case (2.562”OD)(.550”Thick) 2004-Up	1	
209283C	Bearing, ZF6HP19X Driven Gear To Case (Tapered)(1.375”ID)(19 Rollers) 2004-Up	1	
209284C	Shim, ZF6HP19X Case To Drive Gear (2.540”OD)(.088”Thick) 2004-Up	1	
209285C	Roller Bearing, ZF6HP19X Driven Gear (18 Rollers)(.780”Thick)(2.540”OD) 2004-Up	1	
209287C	Ball Bearing, ZF6HP19X Torsen To Extension Housing (16 Balls)(2.675”OD)(.353”Thick) (Cast # SKF 16008163) 2004-Up	1	
209288C	Race, ZF6HP19X Differential To Cover (Tapered)(.535”Thick)(3.500”OD) 2004-Up	1	
209289C	Roller Bearing, ZF6HP19X Differential To Cover (Tapered)(22 Rollers)(2.125”ID) (Cast # LM806649) 2004-Up	1	
209290C	Shim, ZF6HP19X Differential To Cover (3.482”OD)(.058”Thick) 2004-Up	1	
209291C	Race, ZF6HP19X Case To Differential (Tapered) (2.890”OD)(.620”Thick) 2004-Up	1	
209292C	Roller Bearing, ZF6HP19X Case To Differential (23 Rollers)(1.780”ID)(Cast # LM102949) 2004-Up	1	
209293C	Shim, ZF6HP19X Differential Bearing To Case (2.870”OD)(.064”Thick) 2004-Up	1	
209295A	Caged Needle Bearing, ZF6HP19/19X /21 Pump Body To Converter (2.045”ID)(40 Needles) 2004-Up	1	
209296C	Bearing, ZF6HP19X Transfer Gear To Rear Case (25 Rollers)(1.968”ID)(Cast # SKF 32010X1Q) 2004-Up	1	
209297C	Race, ZF6HP19X Transfer Gear To Rear Case (3.150”OD)(.608”Thick)(Cast # SKF 22055B) 2004-Up	1	
209298C	Roller Bearing, ZF6HP19X Inside Transfer Gear (1.655”OD)(.781”Thick)(Cast # INA F-238368) 2004-Up	1	
209298CA	Roller Bearing, ZF6HP19X Inside Transfer Gear (1.537”OD)(.782”Thick)(Cast # INA F-84227) 2004-Up	1	
209298CB	Roller Bearing, ZF6HP19X Inside Transfer Gear (.540”OD)(Cast # INA HK1012) 2004-Up	1	
209299C	Ball Bearing, ZF6HP19X Flange To Extension Housing (11 Balls)(2.440”OD)(.550”Thick) (Cast # SKF 6007/C3) 2004-Up	1	

PART #	GASKETS & RUBBER COMPONENTS	QTY	REFERENCE #
209300A	Gasket, ZF6HP19 (BMW) Bottom Pan (Rubber)	1	
209303C	Gasket, ZF6HP19X Case To Differential (Rubber)(3 3/4”Long) 2004-Up	1	
209305C	Gasket, ZF6HP19X Case To AWD Case (17 Holes) 2004-Up	1	
209309A	Seal/Washer, ZF6HP19/19X/21 Pump Bolt (10 Pieces)(.055”Thick)(.585”OD) 2004-Up	1	
209311A	O-Ring, ZF6HP19/19X/21 Pump Body To Stator (5.728”OD)(.115”Thick) 2004-Up	1	
209311B	O-Ring, ZF6HP19/19X/21 Pump Housing To Case 2000-Up	1	
209330A	O-Ring, ZF6HP19/19X/21 Overdrive Piston (Inner)(1.560”OD)(.105”Thick) 2004-Up	1	
209331A	O-Ring, ZF6HP19/19X/21 Overdrive Piston (Outer)(4.635”OD)(.110”Thick) 2004-Up	1	

© Whatever It Takes Transmission Parts. Inc.

209331B .....O-Ring, ZF6HP19/19X/21 Overdrive Piston Retainer (Outer) 4.585”OD)(.105”Thick) 2004-Up.....1 .....
209332A .....O-Ring, ZF6HP19/19X/21 Intermediate Clutch Piston (Inner)(2.860”ID) 2004-Up .....1 .....
209333A .....O-Ring, ZF6HP19/19X Intermediate Clutch Piston (Outer)(5.799”OD) 2004-Up.....1 .....
209333D .....O-Ring, ZF6HP21 Intermediate Clutch Piston (Outer)(5.120”OD) 2004-Up .....1 .....
209334A .....O-Ring, ZF6HP19/19X/21 Forward Drum (Inner)(3.220”OD)(.110”Thick) 2004-Up.....1 .....
209335A .....D-Ring, ZF6HP19/19X/21 Forward Drum (Outer)(5.405”OD)(.105”Thick) 2004-Up.....1 .....
209335B .....D-Ring, ZF6HP19/19X/21 Forward Retainer (Outer)(6 3/8”OD)(.110”Thick) 2004-Up .....1 .....
209336A .....O-Ring, ZF6HP19/19X/21 Direct Clutch Piston (Inner)(2.295”OD) 2004-Up .....1 .....
209337A .....O-Ring, ZF6HP19/19X/21 Direct Clutch Piston (Outer)(4.120”OD) 2004-Up .....1 .....
209337B .....O-Ring, ZF6HP19/19X/21 Direct Clutch Piston (Outer)(4.173”OD) 2004-Up .....1 .....
209338A .....O-Ring, ZF6HP19/19X/21 Low/Reverse Piston (Inner)(2.405”OD)(.107”Thick) 2004-Up .....1 .....
209338B .....O-Ring, ZF6HP19/19X/21 Low/Reverse Piston (Inner)(2.270”OD)(.105”Thick) 2004-Up .....1 .....
209339-1A.....O-Ring, ZF6HP19/19X/21 Low/Reverse Piston (Inner)(3.980”ID)(.103”Thick) 2004-Up .....1 .....
209339A .....O-Ring, ZF6HP19/19X/21 Low/Rev Piston (Outer)(5.910”OD)(.107”Thick) 2004-Up.....1 .....
209343C .....O-Ring, ZF6HP19X Differential Cover (8 1/8”OD)(.127”Thick) 2004-Up .....1 .....
209345C .....O-Ring, ZF6HP19X AWD Extension Housing To AWD Case (5 13/16”OD)(.113”Thick) 2004-Up ..1 .....
209381A .....O-Ring, ZF6HP19/19X/21 Cover To Case (8 1/2”OD) 2004-Up .....1 .....
209385AK.....Oil Tub Kit, ZF6HP19/21 In Case (4 Pieces)(1-1.875”Long)(1-1.365”Long)(2-1.185”Long)
.....2004-Up .....1 .....
209385CK.....Oil Tub Kit, ZF6HP19/21 In Center Support (12 Pieces)(1-1”Long Tube)(3-.485”Long Tubes)
.....(4-Springs 3.400”Long)(4-Snap Rings .660”OD) 2004-Up.....1 .....

PART #	TECHNICAL MANUALS	QTY	REFERENCE #

209400D .....Tech Guide,ZF6HP21-28 (ATSG).....1 .....

PART #	ELECTRONICAL COMPONENTS	QTY	REFERENCE #

209420A .....Solenoid Assembly, ZF6HP19/A/X (7 Solenoids).....1 .....
209420AA.....Solenoid Assembly, ZF6HP19 (9 Solenoids W/Harness & Park Cyl).....1 .....
209420D .....Solenoid Assy, ZF6HP21/X (7 Solenoids).....1 .....
T-95430-VTK ..Solenoid Test Manifold Kit ZF6HP19/21 (Contains Blue, Yellow & Orange Manifolds)(Allows Quick
.....& Easy Pass/Fail Verification Of The Solenoids Internal Sealing Integrity)(Sonnax)
.....(Must Be Used With T-VACTEST).....1 .....
209420DA.....Solenoid Assy, ZF6HP21/X (9 Solnoids W/Harness & Park Cyl) .....1 .....
209430A .....Solenoid, ZF6HP19/19X/21 1st/Reverse (EDS6)(.675”OD)(Yellow)(Cast # 0501 213 960)
.....2004-Up (Also Fits ZF6HP19/21 Only 4,5,6 (EDS4) & 2,6 (EDS5) 04-Up)(Also Fits ZF6HP19X
.....Only 1,2,4,6 (EDS3) & 1,2,3,4 (EDS1) 2004-Up).....1 .....
209431A .....Solenoid, ZF6HP19/21 All Range (EDS7) & 1,2,3,4 (EDS3)(Blue)(Cast # 0501 213 959) 2004-Up
.....(Also Fits ZF6HP19X 4,5,6 (EDS4) / 2,6 (EDS5) / 1,2,3,4,5,6 (EDS2) 2004-Up) .....1 .....
209431C .....Solenoid, ZF6HP19X All Range (EDS6)(.690”OD)(2.215”Long)(Black)(Cast # 0501 319 037 &
.....0260 120 039) 2004-Up .....1 .....
209431A .....Solenoid, ZF6HP19/21 All Range (EDS7) & 1,2,3,4 (EDS3) (Blue)(Cast # 0501 213 959) 2004-Up
.....(Also Fits ZF6HP19X 4,5,6 (EDS4) / 2,6 (EDS5) / 1,2,3,4,5,6 (EDS2) 2004-Up) .....1 .....
209440A .....Solenoid, ZF6HP19/21 1,2,3,4,5 ,6 (EDS2) & 1,2,3,4 (EDS1)(Brown)(Cast # 0501 214 958)
.....2004-Up .....1 .....
49444A .....Connector, ZF6HP19/21 Case (Plastic, Pass-Thru)(1.920”Long)(Includes 3 O-Rings) 2004-Up ...1 .....
209445C .....Wire Harness, ZF6HP19X (30 Wires 15 Female/15 Male)(Male Has 16 Pin Connector)
.....(24 3/4”Long) 2004-Up .....1 .....
209446A .....Circuit Board, ZF6HP19/21 Control Module (16 Pin Round Connector) 2004-Up .....1 .....
209446C .....Circuit Board, ZF6HP19X Control Module (16 Flat Long Connector) 2004-Up .....1 .....

PART #	MISCELLANOUS COMPONENTS	QTY	REFERENCE #

209459A .....Bracket, ZF6HP19/19X/21 Solenoid (9 Holes)(9”Long) 2004-Up .....1 .....
209491C .....Drain Plug, ZF6HP19X Differential (8mm Allen) 2004-Up.....1 .....
209492C .....Drain Plug, ZF6HP19X Pan (5mm Allen) 2004-Up .....1 .....
209492CB.....Fill Plug, ZF6HP19X Extension Housing (8mm Allen) 2004-Up.....1 .....
209493A .....Fill Plug, ZF6HP19/19X/21 (Rear)(Driver Side)(8mm Allen) 2004-Up .....1 .....
209495-3 .....Oil Sealing Sleeve, ZF6HP19/19X/21/21X Passage In Transmission Housing .....1 .....

PART #	HARD PARTS	QTY	REFERENCE #

209510A .....Pump Body W/Gears, ZF6HP19/19X/21 (2.280”OD Front Seal)(Cast # 1068 410 063) 2004-Up .1 .....
209520A .....Pump Cover, ZF6HP19 (Cast # 1071410116)(Aluminum) 2004-06.....1 .....
209520C .....Pump Cover, ZF6HP19X (Cast # 1071410118)(Aluminum) 2004-Up.....1 .....
209520D .....Pump Cover, ZF6HP21 (Cast # 1071410116)(Aluminum) 2004-Up .....1 .....
209528A .....Stator Hsg, ZF6HP19 (Cast # 1071 410 115) 2004-06 .....1 .....
209528C .....Stator Hsg, ZF6HP19X (Cast # 1071 410 121) 2004-Up.....1 .....
209528D .....Stator Hsg, ZF6HP21 (Cast # 1071 410 135) 2004-Up .....1 .....

© Whatever It Takes Transmission Parts. Inc.

PART #	HARD PARTS (Continued)	QTY	REFERENCE #
209529A	Stator, ZF6HP19/19X/21 (7”Tall)(5.235”OD)(43 Splines)(17 Bolt Holes) 2004-Up	1	
209530A	Pump Gear Set, ZF6HP19/19X/21 (17 Teeth Inner Gear)(21 Teeth Outer Gear)(.550”Thick) 2004-Up	1	
209550A	Drum W/Shaft, ZF6HP19/19X/21 Overdrive Clutch (E)(3 Ring Shaft)(11 3/4”Tall)(Stamp Steel) 2004-Up	1	
209554A	Drum, ZF6HP19/19X/21 Forward Clutch (A)(7 1/8”OD)(3.280”Tall)(Stamped Steels)(4 Clutch) 2004-Up	1	
209555A	Drum, ZF6HP19/19X/21 Direct Clutch (B)(7”Tall)(30 Teeth Steels)(2 Rings & 2 Bushings) 2004-Up	1	
209570A	Hub W/Shaft, ZF6HP19/19X/21 Overdrive Clutch (10 1/4”Long)(Stamp Steel)(32 Teeth) 2004-Up	1	
209574A	Hub W/Shaft, ZF6HP19/19X/21 Forward Clutch (10 1/8”Tall)(15 Round Holes)(15 Square Holes) (30 Clutch Teeth) 2004-Up	1	
209575A	Hub, ZF6HP19/19X/21 Direct Clutch Hub (2.225”Tall)(30 Clutch Teeth)(5.607”ID) 2004-Up	1	
209580A	Planet, ZF6HP19/19X/21 Rear (6 Gear)(4.540”Tall)(6 Pin)(24 Teeth Short Gears)(23 Teeth Long Gears) 2004-Up	1	
209580AK	Planet Kit, ZF6HP19/19X/21 Rear (4.540”Tall)(6 Pin)(6 Gear With 1 #610 Sun Gear)(Also Includes #220 Bearing) 2004-Up	1	
209582A	Planet, ZF6HP19/19X Forward (3 Gear)(1.430”ID)(1.575”Thick)(6 Sets Of 5 Outer Teeth) 2004-Up	1	
209582D	Planet, ZF6HP19/19X Forward (4 Gear)(1.430”ID)(1.575”Thick)(6 Sets Of 5 Outer Teeth) 2004-Up	1	
209590A	Ring Gear, ZF6HP19 Rear Planet (.620”Long Park Lugs)(85 Teeth)(Left Angle)(Light Duty) 2004-06 (Can Retro To Heavy Duty)	1	
209590C	Ring Gear, ZF6HP19X/21 Rear Planet (1 1/4”Long Park Lugs)(85 Teeth)(Left Angle)(Heavy Duty) 2004-Up	1	
209610A	Sun Gear, ZF6HP19/19X/21 Rear Planet (Rear)(2.130”OD)(2 Grooves)(Right Angle)(31 Teeth) 2004-Up	1	
209612A	Sun Gear, ZF6HP19/19X/21 Forward (37 Teeth)(1 Groove)(Splined ID)(Right Angle)(2.485”OD) 2004-Up	1	
209614A	Sun Gear, ZF6HP19/19X/21 Rear Planet (Front)(2.560”OD)(3 Grooves)(Left Angle)(38 Teeth) 2004-Up	1	
209632A	Center Support, ZF6HP19 (Aluminum)(5 Opening on Each Side)(Both Pistons Are Large) (Cast # 1071 475 040) 2004-Up	1	
209632C	Center Support, ZF6HP19X (Aluminum)(5vs6 Openings On Sides) (Both Have Large Pistons) (Cast # 1071 475 046) 2004-Up	1	
209632D	Center Support, ZF6HP21 (Aluminum)(5vs6 Opening On Sides)(Intermediate Pistons Is Small & Low/Reverse Piston Is Large) 2004-Up	1	
49639A	Keyway Lug, ZF6HP19/19X/21 Center Support To Case (.240”Thick)(.472”Wide)(1.175”Long) 2004-Up	2	
209678A	Shaft, ZF6HP19/21 Output (2WD)(7 1/16”Long Shaft)(16 Park Lugs)(2.165”Bearing Land) 2004-Up	1	
209678C	Shaft, ZF6HP19X Output (4WD)(4”Long Shaft)(16 Park Lugs)(1.375”Bearing Land) 2004-Up	1	
209698C	Oil Deflector, ZF6HP19X/21 Center Support To Bearing (2.742”OD)(.039”/.220”Thick) 2004-Up	1	
209707C	Transfer Gear, ZF6HP19X (33 Teeth)(3.990”OD Gear)(Left Angle)(4.690”Long) 2004-Up	1	
209710C	Gear, ZF6HP19X (Drive Transfer (29 Teeth)(Right Angle)(4.963”Long)(3.500”Gear OD) 2004-Up	1	
209712C	Gear, ZF6HP19X Driven Transfer (31 Teeth)(5.565”Tall)(Right Angle)(3.655”OD Gear) 2004-Up	1	
209714C	Gear, ZF6HP19X Driven (8 7/8” Long)(29 Teeth)(Left Angle)(3.400”OD Gear) 2004-Up	1	
209716C	Housing, ZF6HP19X Differential (12 Bolt)(4 3/4”Tall) 2004-Up	1	
209717C	Bracket, ZF6HP19X Differential Gasket To Case (1 Tab)(Five Holes)(1 Bolt) 2004-Up	1	
209719C	Torsen 2 Assembly, ZF6HP19X (AWD)(3 Windows With 6 Gears)(5 1/4”Tall) 2004-Up	1	
209720C	Pinion, ZF6HP19X Differential (11 Teeth)(16 3/8”Long)(Right Angle) 2004-Up	1	
209720CK	Differential, ZF6HP19X Pinion & Ring Gear 2004-Up	1	
209730C	Ring Gear, ZF6HP19X Differential (4.407”ID)(32 Teeth)(Left Angle)(12 Bolt) 2004-Up	1	
209733C	Vibration Damper, ZF6HP19X Extension Housing 2004-Up	1	
209735C	Race Assembly, ZF6HP19X Pinion Bearing (Double Tapered)(2.245”Tall)(3.452”OD/3.250”OD) 2004-Up	1	
209736C	Retainer, ZF6HP19X Driven Cup Race (Aluminum)(3.940”OD)(.620”Tall) 2004-Up	1	
209740AAK	Valve Body, ZF6HP19 (Contains Ill#’s: 420, 444, 446, 698, 740 & 765) (Fits 1071 010 Units Ending in 024/025/027/029) Also Fits ZF6HP19X (Fits 1071 020 Units Ending In 006/007)	1	
209740ABK	Valve Body, ZF6HP19 (Contains Ill#’s: 420, 444, 446, 698, 740 & 765)(Fits 1071 010 Units Ending In: 005/006/007)(Fits 1071 012 024)	1	
209740ACK	Valve Body, ZF6HP21 (Contains Ill#’s: 420, 444, 446, 698, 740 & 765)(Fits 1071 030 Units Ending In: 019/020/021)(Fits 1071 050 Units Ending In: 001/008/010/016/022)	1	
209740ADK	Valve Body, ZF6HP21 (Contains Ill#’s: 420, 444, 446, 698, 740 & 765)(Fits 1071 030 Units Ending In: 026/027/037/072/074/075)(Fits 1071 050 Units Ending In 017/036)	1	
209740AEK	VB, ZF6HP21 (Contains Ill#’s: 420, 444, 446, 698, 740 & 765)(Fits 1071 030 Units Ending In:		

© Whatever It Takes Transmission Parts. Inc.

049/063/071) 1

209740AFK ... VB, ZF6HP21 (Contains Ill#'s: 420, 444, 446, 698, 740 & 765)(Fits 1071 030 Units Ending In: 003) 1

209740AGK ... VB, ZF6HP21 (Contains Ill#'s: 420, 444, 446, 698, 740 & 765) 1

209740AHK ... VB, ZF6HP21 (Contains Ill#'s: 420, 444, 446, 698, 740 & 765)(Fits 1071 030 Units Ending In 004) 1

PART #	VALVE BODY COMPONENTS	QTY	REFERENCE #

49741AC-6K ... End Plug Kit, ZF6HP19 Valve Body(Contains; 6 Large End Plugs W/O-Rings & Washer, 1 Small End Plug W/O-Ring & Washer, & 1 Pressure Regulator Support Sleeve)(Superior) 1

49741L ... Valve Kit, ZF6HP19 Solenoid & Lube Regulator (Without Tool)(Transgo) 1

49741LK ... Valve Kit, ZF6HP19 Solenoid & Lube Regulator (With Tool)(Transgo) 1

209741D-6K ... End Plug Kit, ZF6HP21 (Single O-Ring)(Contains: 2 Large 15mm End Plugs, 4 Large O-Rings, 6 Small 13mm End Plugs, & 9 Small O-Rings)(Sonnax) 1

209741DA-6K ... End Plug Kit, ZF6HP21 (Double O-Ring)(Contains: 7 12mm End Plugs & 20 O-Rings)(Sonnax) 1

49741ABK ... Valve Kit, ZF6HP19 Bypass Clutch Control (Oversized) 2002-Up (Sonnax)(Must Use Tool T-F-95740-TL13 & T-VB-FIX) 1

49741AC-6K ... End Plug Kit, ZF6HP19 2004-06 (Sonnax)(Contains; 6 Large & 6 Small Pluge W/O-Rings) 1

49741ACK ... Valve Kit, ZF6HP19 Converter Release Regulator(Oversized) 2002-Up (Sonnax) (Must Use Tool T-F-95740-TL5 & T-VB-Fix) 1

49741AD-6K ... End Plug Kit, ZF6HP19 2004-06 (Sonnax)(Contains; 4 Internal Plugs W/O-Rings) 1

49741AFK ... Valve Kit, ZF6HP19 Lube Control(Oversized) 2006-Up (Sonnax)(Must Use Tool T-F-95740-TL11 & T-VB-FIX) 1

49741AGK ... Valve Kit, ZF6HP19 Clutch A Control(Oversized) 2004-06 (Sonnax) (Must Use Tool T-F-95740-TL8 & T-VB-FIX) 1

49741AJK ... Valve Kit, ZF6HP19 Clutch D1 Or E Control(Oversized) 2004-06 (Sonnax) (Must Use Tool T-F-95740-TL8 & T-VB-FIX) 1

49741ALK ... Valve Kit, ZF6HP19 Sol Pressure Regulator(Oversized) 2004-06 (Sonnax) (Must Use Tool T-F-95740-TL17 & T-VB-Fix) 1

49741AP-2 ... Sleeve, ZF6HP19 Pressure Regulator 2004-06 (Sonnax) 1

49741APK ... Valve Kit, ZF6HP19 Pressure Regulator (Oversized) 2004-06 (Sonnax) (Must Use Tool T-F-95740-TL & T-VB-FIX) 1

49741ATK ... Valve & Sleeve Kit, ZF6HP19 Clutch A Control Boost 2004-06 (Sonnax) 1

49741GK ... Zip Kit, ZF6HP21 (Sonnax)(Contains: Pressure Reg. Sleeve,Clu A & E Control Boost Valve & Sleeve Kit,Valve Body Accum. Piston & Spring Kit, O-Ringed End Plug Kit,Valve Body Accumulator Piston & Spring Kit, O-Ringed End Plug Kit, Solenoid O-Rings) 1

49741PK ... Valve Kit, ZF6HP21 Solenoid Pressure Regulator (Oversized)(Contains: O-Ringed End Plug, 2-O-Rings, Spring, & Valve)(Must Use T-F-95740-TL17 & T-VB-Fix) 1

49741SK ... ZIP KIT, ZF6HP19 (Sonnax)(Contains: S49741AP-2, S49741TK, S49741AD-6K, S49741AC-6K, S49940AK, Replacement O-Rings & Testing Parts) 1

49741SKA ... Zip Kit,ZF6HP19 W/053 Separator Plate Only 1

209741-1A ... Manual Valve, ZF6HP19/19X/21 (5.393"Long)(.588"OD)(5 Lands) 2004-Up 1

PART #	HARD PARTS (Continued)	QTY	REFERENCE #

209758C ... Cover, ZF6HP19X Differential (Aluminum)(4 Threaded Bosses)(Drain Plug)(11 Bolt) (Cast # 1068 435 032) 2004-Up 1

209759C ... Rear Case, ZF6HP19X (AWD)(5 3/8"Tall)(8 Threaded Boses)(15 To Bolts To Main Case)(6 Bolts To Extension Housing) 2004-Up 1

209760A ... Case, ZF6HP19 (25"Long)(2WD)(6 Rear Bosses) 2004-06 1

209760C ... Case, ZF6HP19X (23 1/4"Long)(AWD) 2004-Up 1

209760D ... Case, ZF6HP21 (25"Long)(2WD)(4 Rear Bosses) 2004-Up 1

209765A ... Pan W/Filter, ZF6HP19/21 (BMW)(Plastic)(With Gasket) (24 Bolt) 2004-Up 1

209765C ... Pan, ZF6HP19X (AUDI) (Metal)(2 Drain Plugs)(23 Bolt) 2004-Up 1

209770C ... Extension Housing, ZF6HP19X (AWD)(Fill Plug)(6 Bolts To Rear Case)(9 Threaded Bosses) 2004-Up 1

209774C ... Retainer, ZF6HP19X Axle Seal (Alum)(Triangle)(.313"Thick)(Driver Side) 2004-Up 1

209777AK ... Bolt Set, ZF6HP19/19X/21 Pump To Case (10 Pieces)(T27 x 2.327"Long) 2004-Up 1

209778AK ... Bolt Set, ZF6HP19/19X/21 (6 Pieces T27 x 1.100"Long)(11 Pieces T27 x 2.045"Long) 2004-Up 1

209779AK ... Bolt Set, ZF6HP19/21 Pan To Case (24 Pieces)(T40 x 1.307"Long) 2004-Up 1

209779CK ... Bolt Set, ZF6HP19X Pan To Case (23 Pieces)(T27 x 1.060"Long) 2004-Up 1

209780CK ... Bolt Set, ZF6HP19X AWD Case To Main Case (15 Pieces)(T40 x 1.430"Long) 2004-Up 1

209782AK ... Bolt Set, ZF6HP19/21 Valve Body To Case (10Pieces) (T40 x 2.510"Long) 2004-Up (Can Use These For ZF6HP19X Valve Body Bolts) 1

209782CK ... Bolt Set, ZF6HP19/21 Valve Body To Case (7 Pieces)(T40 x 2.510"Long) 2004-Up 1

209786CK ... Bolt Set, ZF6HP19X Ring Gear To Differential Housing (12Pieces)(17mm Hex x 1.125"Long) 2004-Up 1

209790CK ... Bolt Set, ZF6HP19X AWD Extension Housing To AWD Case (6 Pieces)(T40 x 1.430"Long) 2004-Up 1

© Whatever It Takes Transmission Parts. Inc.

ZF

PART #	HARD PARTS (Continued)	QTY	REFERENCE #
209792AK	Bolt Set, ZF6HP19/21 Circuit Board To Valve Body (T27 x 2.310”Long)(6 Pieces) 2004-Up	1	
209792CK	Bolt Set, ZF6HP19X Circuit Board To Valve Body (6 Pieces)(1-T27 x 4.060”Long) (5-T27 x 2.310”Long) 2004-Up	1	
209794A	Plug, ZF6HP19/19X/21 Park Pin Retainer (6mm Allen) 2004-Up	1	
175796A	Nut, ZF6HP19 Pinion (2.200”OD) (1.515”ID)(4 Holes) 2004-Up	1	
209798A	Nut, ZF6HP19/21 Hold (2WD) Yoke To Output Shaft (12 Point)(.570”Tall) 2004-Up	1	
209798C	Bolt, ZF6HP19C Driven Gear To Pinion (E12 Head)(2.180”Long) 2004-Up	1	
209820C	Flange Plate, ZF6HP19X Oil Defector (Tin)(5 3/4”OD)(1.975”ID) 2004-Up	1	
209838C	Axle Flange, ZF6HP19X Drivers Side (12 1/2”Long)(1.377”OD Bearing) 2004-Up	1	
209838CA	Axle Flange, ZF6HP19X Pass. Side (3 1/8”Tall)(1.572”OD Bearing) 2004-Up	1	
209839C	Magnet, ZF6HP19X Differential (L Shaped Bracket) 2004-Up	1	
209841A	Yoke, ZF6HP19/21 (2WD)(3 Bolt) 2004-Up	1	
209861A	Snap Ring, ZF6HP19/19X/21 Holds Overdrive Clutch In Drum (5.325”OD)(.157”Wide)(.076”Thick) 2004-Up	1	
209861AA	Snap Ring, ZF6HP19/19X/21 Holds Overdrive Clutch In Drum (5.325”OD)(.157”Wide)(.083”Thick) 2004-Up	1	
209861AB	Snap Ring, ZF6HP19/19X/21 Holds Overdrive Clutch In Drum (5.325”OD)(.157”Wide)(.092”Thick) 2004-Up	1	
209862-1A	Retainer/Spacer, ZF6HP19/19X/ 21 Sets On Snap Ring (1.565”OD)(.137”Thick) 2004-Up	1	
209862A	Snap Ring, ZF6HP19/19X/21 Holds Overdrive Clutch Piston Retainer In Drum (.1.460”OD) (.097”Thick) 2004-Up	1	
209873A	Snap Ring, ZF6HP19/19X/21 Holds Intermediate Clutch To Center Support (Top)(6 1/2”OD) (.081”Thick) 2004-Up	1	
209873AA	Snap Ring, ZF6HP19/19X/21 Holds Intermediate Clutch To Center Support (Top)(6 1/2”OD) (.091”Thick) 2004-Up	1	
209873AB	Snap Ring, ZF6HP19/19X/21 Holds Intermediate Clutch To Center Support (Top)(6 1/2”OD) (.095”Thick) 2004-Up	1	
209874A	Clips, ZF6HP19/19X/21 Intermediate Clutch Pistons (3.165”Long) 2004-Up	2	
209875A	Snap Ring, ZF6HP19/19X/21 Holds Direct Hub To Forward Drum (7 3/8”OD)(.194”Wide) 2004-Up	1	
209876A	Snap Ring, ZF6HP19/19X/21 Holds Forward Clutch In (7 1/8”OD)(.091”Thick) 2004-Up	1	
209877A	Snap Ring, ZF6HP19/19X/21 Holds Forward Clutch Return Spring In (2.775”ID)(.056”Thick) (4 Outer Notches) 2004-Up	1	
209878A	Snap Ring, ZF6HP19/19X/21 Top Direct Clutch (.075”Thick) 2004-Up	1	
209878AA	Snap Ring, ZF6HP19/19X/21 Top Direct Clutch (.084”Thick) 2004-Up	1	
209883A	Snap Ring, ZF6HP19/19X/21 Center Support To Case (7”OD)(.172”Thick)(Beveled) 2004-Up	1	
209885A	Snap Ring, ZF6HP19/19X/21 Holds Low/Reverse Clutch To Center Support (6 1/2”OD) (.091”Thick)(.153”Wide) 2004-Up	1	
209886C	Snap Ring, ZF6HP19X Holds Transfer Gear In (1.725”OD)(.057”Thick)(.088”Wide) 2004-Up	1	
209889A	Snap Ring, ZF6HP19/19X/21 Holds Output Shaft To Ring Gear (6 1/2”OD)(.076”Thick)(.155”Wide) 2004-Up	1	
209892C	C-Clip, ZF6HP19X Axle Flange (1.215”OD)(.100”Thick) 2004-Up	1	
209893A	Snap Ring, ZF6HP19/19X/21 Holds Low/Reverse Piston To Center Support (2.365”OD) (.076”Thick) 2004-Up	1	
209894A	Snap Ring, ZF6HP19/21 Holds Needle Bearing To Case (2.590”OD)(.056”Thick) 2004-Up	1	
209894C	Snap Ring, ZF6HP19X Holds Pinions Seals To Case (3.715”OD)(.162”Thick)(2 Eyelets) 2004-Up	1	
209895A	Snap Ring, ZF6HP19/21 Holds Ball Bearing To Case (.094”Thick)(Beveled)(3.055”OD) 2004-Up	1	
209895C	C-Clip, ZF6HP19X Holds Driven Axle Flange To Bearing (.075”Thick)(1.405”OD) 2004-Up	1	
209896C	Snap Ring, ZF6HP19X Holds Rear Output Flange To Housing (1.570”OD)(2 Eyelets)(.057”Thick) 2004-Up	1	
209898A	Snap Ring, ZF6HP19/19A/19X/21 Holds Front Bearing To Pump Body (2.140”OD)(.056”Thick) 2004-Up	1	
209899C	Snap Ring, ZF6HP19X Holds Bearing To Extension Housing (2 Eyelets)(2.600”OD)(.076”Thick) 2004-Up	1	
209960A	Piston, ZF6HP19 Overdrive Clutch (Aluminum)(4.860”OD)(1.445”Thick)(4 Clutch) (Cast # 1071 471 056) 2004-06	1	
209960B	Piston, ZF6HP19/19X/21 Overdrive Clutch Retainer (Steel)(4.575”OD)(1.300”ID)(8 Notches) 2004-Up	1	
209960C	Piston, ZF6HP19X/21 Overdrive Clutch (Aluminum)(4.860”OD)(1.290”Thick)(6 Clutch) (Cast # 1071 471 005) 2004-Up	1	
209962A	Piston, ZF6HP19/19X Intermediate Clutch (Aluminum)(5.775”OD)(.530”Thick) (Cast # 1071 475 036) 2004-Up	1	
209962D	Piston, ZF6HP21 Intermediate Clutch (Aluminum) (5.780”OD)(2.890”ID)(Cast # 1071 475 054) 2004-Up	1	
209964A	Piston, ZF6HP19/19X/21 Forward Clutch (Aluminum)(6 5/8”OD)(1.755”Tall)(Cast # 1071 470 087) 2004-Up	1	

© Whatever It Takes Transmission Parts. Inc.

209964B ..... Piston, ZF6HP19/19X/21 Forward Clutch Retainer (Steel)(6 5/16”OD)(1.695”Thick) 2004-Up ..... 1 .....
209965A ..... Piston, ZF6HP19 Direct Clutch (6 5/8”OD)(5 Clutch)(1.835”Thick)(Cast # 1071 472 053)
..... 2004-06 ..... 1 .....
209965B ..... Piston, ZF6HP19/19X/21 Direct Clutch (4.155”OD)(Inner)(.503”Thick) 2004-Up ..... 1 .....
209965C ..... Piston, ZF6HP19X/21 Direct Clutch (6 5/8”OD)(1.685”Thick)(Cast # 1071 472 052)(6 Clutch)
..... 2004-Up ..... 1 .....
209967A ..... Piston, ZF6HP19/19X/21 Low/Reverse Clutch (Aluminum)(5.890”OD)(Cast # 1071 473 010)
..... 2004-Up ..... 1 .....
209967B ..... Piston, ZF6HP19/19X/21 Low/Reverse Clutch (Inner)(3.980”OD)(Steel) 2004-Up ..... 1 .....
209970A ..... Spring, ZF6HP19/19X/21 Overdrive Clutch Return (4.200”OD)(9 Fingers)(.072”Thick) 2004-Up .. 1 .....
209972A ..... Spring, ZF6HP19/19X Intermediate Clutch Piston Return (5.402”OD)(12 Fingers)(.444”Tall)
..... 2004-Up ..... 1 .....
209972D ..... Spring, ZF6HP21 Intermediate Clutch Piston Return (4.810”OD)(12 Fingers)(.310”Tall) 04-Up .... 1 .....
209974A ..... Spring, ZF6HP19/19X/21 Forward Clutch Return (5.700”OD)(12 Fingers)(.077”Thick) 2004-Up .. 1 .....
209975A ..... Spring, ZF6HP19/19X/21 Direct Clutch Return (4.490”OD)(14 Fingers)(.070”Thick) 2004-Up ..... 1 .....
209977A ..... Spring, ZF6HP19/19X/21 Low/Reverse Clutch Return (4.545”OD)(.059”Thick) 2004-Up ..... 1 .....
209986A ..... Clips, ZF6HP19/19X/21 Direct Clutch Pistion (Horse Shoe)(2.232”Long)(.174”Thick) 2004-Up .... 2 .....
209987A ..... Retainer/Spacer, ZF6HP19/19X/21 Low/Reverse Clutch Piston (2.950”OD)(.078”/.125”Thick)
..... 2004-Up ..... 1 .....
209991-2A ..... Detent Spring, ZF6HP19/19X/21 (3.687”Long)(.051”Thick)(.196”OD Roller)(2 Bent Ears)
..... (2 Bolt Holes) 2004-Up ..... 1 .....
209991-3A ..... Rooster Comb, ZF6HP19/19X/21 (7 Detents)(.550”Thick)(Cast # 1068 306 018) 2004-Up ..... 1 .....
209991-4A ..... Linkage Shaft, ZF6HP19/21 Manual (3.360”Long)(Threaded)(One Hole) 2004-Up ..... 1 .....
209991-4C ..... Linkage Shaft, ZF6HP19X Manual (3.535”Long)(Two Holes) 2004-Up ..... 1 .....
209991-6A ..... Acuator, ZF6HP19/19X/21 Park (3 Bolt Holes)(.194”Thick)(One .198”Alignment Pin) 2004-Up .... 1 .....
209991-7A ..... Roll Pin, ZF6HP19/19X/21 Rooster Comb To Shaft (.875”Long)(.202”OD) 2004-Up ..... 1 .....
209991-8A ..... Spacer, ZF6HP19/19X/21 Linkage Shaft (.885”Long)(.550”OD) 2004-Up ..... 1 .....
209994A ..... Park Rod, ZF6HP19/19X/21 (3 Bends)(8 3/4”Long)(.548”Ball OD) 2004-Up ..... 1 .....
209995A ..... Park Pawl Assy, ZF6HP19/19X/21 (3 Pieces) 2004-Up (Contains: Spring, Pin & Park Pawl) ..... 1 .....
209999A ..... Oil Sleeve Kit, ZF6HP19/21 Valve Body To Pump (Plastic)(Dual Squares)(.750”Tall)
..... (1.170” x 2.670”) 2004-Up ..... 1 .....

© Whatever It Takes Transmission Parts. Inc.

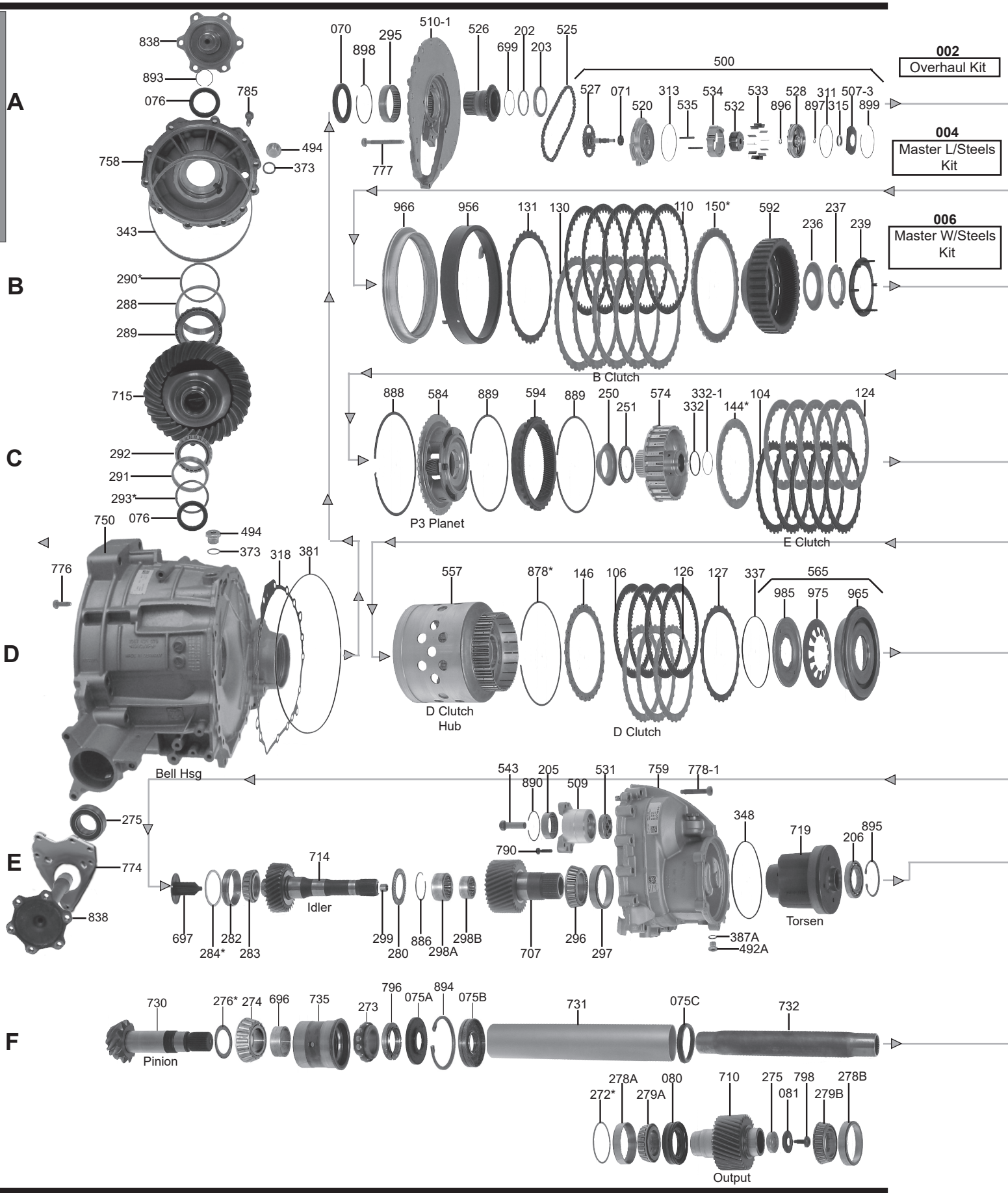
A
B
C
D
E
F
838
893
076
785
758
494
373
343
070
898
295
510-1
526
699
202
203
525
500
527
071
520
313
535
534
532
533
896
528
897
311
315
507-3
899
777
002
Overhaul Kit
004
Master L/Steels Kit
006
Master W/Steels Kit
966
956
131
130
110
150*
592
236
237
239
B Clutch
290*
288
289
715
888
584
889
594
889
250
251
574
332
332-1
144*
104
124
P3 Planet
E Clutch
292
291
293*
750
076
494
373
318
381
776
557
878*
146
106
126
127
337
565
985
975
965
D Clutch Hub
D Clutch
Bell Hsg
543
205
890
509
531
759
778-1
348
719
206
895
790
275
774
838
714
Idler
697
284*
282
283
299
280
886
298A
298B
707
296
297
387A
492A
Torsen
730
276*
274
696
735
273
796
075A
894
075B
731
075C
732
Pinion
278A
272*
279A
080
710
275
081
798
279B
278B
Output

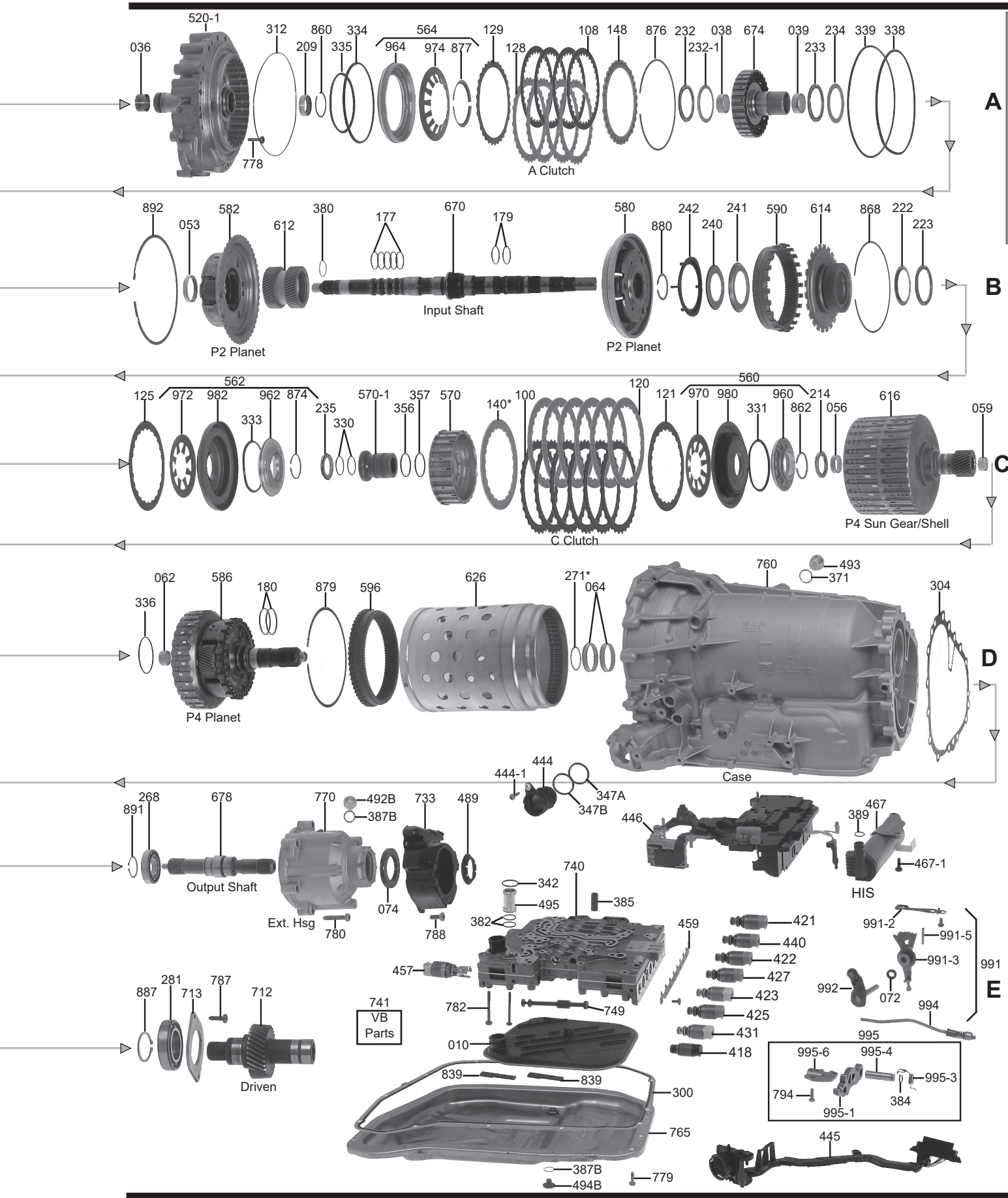

1-800-940-0197

© Whatever It Takes Transmission Parts. Inc.

PART #	OVERHAUL KITS	QTY	REFERENCE #
309002A	Overhaul Kit, ZF8HP55 2009-Up	1	

PART #	MASTER L/STEEL KIT	QTY	REFERENCE #
309004A	Master L/Steels Kit, ZF8HP55 2009-Up	1	

PART #	MASTER W/STEEL KIT	QTY	REFERENCE #
309006A	Master W/Steels Kit, ZF8HP55 2009-Up	1	

PART #	FILTERS	QTY	REFERENCE #
309010A	Filter, ZF8HP55 2009-Up (1/2 Metal & 1/2 Plastic) (Rectangle Inlet)	1	

PART #	BUSHINGS	QTY	REFERENCE #
309036A	Bushing, ZF8HP55 Stator (Front) (.600"Wide)(1.208"OD) 2009-Up	1	
309038A	Bushing, ZF8HP22 A Clutch Hub (Front)(Brass)(1.445"OD) (1.315"ID)(.275"Wide) 2009-Up	1	
309039A	Bushing, ZF8HP55 A Clutch Hub (Rear)(Brass)(1.445"OD) (1.305"ID)(.450"Wide) (2 Straight Grooves) 2009-Up	1	
309053A	Bushing, ZF8HP55 P1 Planet (1.810"OD)(1.675"ID) (.390"Wide) 2009-Up	1	
309056A	Bushing, ZF8HP55 P4 Planet Sun Gear (Front)(.400" Wide) (1.040"ID) 2009-Up	1	
309059A	Bushing, ZF6HP22 P4 Planet Sun Gear (Rear)(.400" Wide) (1.00"OD)(.875"ID) 2009-Up	1	
309062A	Bushing, ZF8HP55 P4 Planet (.340"Wide)(.875"ID) 2009-Up	1	
309064A	Bushing, ZF8HP55 Case (.370" Wide)(1.890"ID) 2009-Up	2	

PART #	METAL CLAD SEALS	QTY	REFERENCE #
309070A	Seal, ZF8HP55AF Front (2.795"OD)(2.0"ID)(.285"Thick) 2009-Up	1	
309071A	Seal, ZF8HP55 Driven Pump Shaft (.830"OD)(.432"ID) 2009-Up	1	
309072A	Seal, ZF8HP55 External Linkage (.715"OD)(.390"ID)(.195"Thick) 2009-Up	1	
309074A	Seal, ZF8HP55 Extension Housing (4x4) (2.032"OD) 2009-Up	1	
309075A	Seal, ZF8HP55 Pinion (Inner) (Rubber Coated)(3.788"OD) (1.450"ID) 2009-Up	1	
309075B	Seal, ZF8HP55 Pinion (3.788"OD)(1.485"ID)(Rubber Coated) 2009-Up	1	
309075C	Seal, ZF8HP55 Rear Case (Rubber)(2.835"OD)(2.235"ID) (.365"Thick) 2009-Up	1	
309076A	Seal, ZF8HP55 Axle (Differential Side) (1.860"OD)(1.265"ID) (.272"Thick)(ACM 0734 319 837) 2009-Up	1	
309076B	Seal, ZF8HP55 Differential Cover (2.170"OD)(1.535"ID)(.288"Thick) (SLRKFX37) 2009-Up	1	
309080A	Seal, ZF8HP55 Output Gear (Rear)(Double Lip)(3.040"OD) (.725"Thick)(2.00"ID) 2009-Up	1	
309081A	Seal, ZF8HP55 Output Gear (Rear)(1.585"OD)(.220"Thick) 2009-Up	1	

PART #	FRICTIONS	QTY	REFERENCE #
309104A	Friction, ZF8HP55 E Clutch (.085"Thick) (32 Outer Teeth)(5.340"ID) 2009-Up (Takes 5) (Also Fits ZF8HP55 C Clutch)(Takes 6)	5-11	
309106A	Friction, D Clutch (.085")(63 Teeth) (6.775"OD) 2009-Up	4	
309108A	Friction, ZF8HP55 A Clutch (.061") (32 Teeth)(5.740"OD) 2009-Up	4	
309110A	Friction, ZF8HP55 B Clutch (.080") (38 Teeth)(7.810"OD) 2009-Up	5	
309119A	Friction Module, ZF8HP55 2011-Up	1	

PART #	STEELS	QTY	REFERENCE #
309121A	Steel, ZF8HP55 C Clutch (.015") (24 Inner Teeth)(6.360"OD) 2009-Up	1	
309124A	Steel, ZF8HP55 E Clutch (.080"Thick)(24 Inner Teeth)(6.430"OD) 2009-Up (Also Fits ZF8HP55 C Clutch)(Takes 6)	5-11	
309125A	Steel, ZF8HP55 E Clutch (.015") (22 Inner Teeth)(6.360"OD) 2009-Up	1	
309126A	Steel, ZF8HP55 D Clutch (.076") (30 Teeth)(5.720"ID) 2009-Up	3	
309127A	Steel, ZF8HP55 D Clutch (.018") (30 Teeth)(5.825"ID)(Waved) 2009-Up	1	
309128A	Steel, ZF8HP55 A Clutch (.070") (30 Teeth)(6.020"OD) 2009-Up	4	
309129A	Steel, ZF8HP55 A Clutch (.026") (30 Teeth)(Waved)(Bottom) 2009-Up	1	
309130A	Steel, ZF8HP55 B Clutch (.069") (35 Teeth)(6.802"ID) 2009-Up	5	
309131A	Steel, ZF8HP55 B Clutch (Bottom) (34 Teeth)(.026"Thick)(Waved) 2009-Up	1	
309139A	Steel Module, ZF8HP55 2013-Up	1	

PART #	PRESSURE PLATES	QTY	REFERENCE #
309144A	Pressure Plate, ZF8HP55 E Clutch (Top) (Selective)(6.425"OD) (24 Inner Teeth) 2009-Up (Also Fits ZF8HP55 C Clutch)	1-2	

© Whatever It Takes Transmission Parts. Inc.

309146A ..... Pressure Plate, ZF8HP55 D Clutch (.115" Thick)(30 Teeth)(5.720"ID) 2009-Up ..... 1 .....
309148A ..... Pressure Plate, ZF8HP55 A Clutch (Top) (30 Teeth)(4.837"ID) 2009-Up ..... 1 .....
309150A ..... Pressure Plate, ZF8HP55 B Clutch (Top) (36 Teeth)(Selective)(6.805"ID) 2009-Up ..... 1 .....

PART #	OIL SEALING RINGS	QTY	REFERENCE #

309177AT ..... Sealing Ring, ZF8HP55 Input Shaft (Front)(.076"Thick)(1.230"OD) 2009-Up ..... 5 .....
309179AT ..... Sealing Ring, ZF8HP55 Input Shaft (Rear)(.076"Thick)(1.230"OD) 2009-Up ..... 2 .....
309180AT ..... Sealing Ring, ZF8HP55 Output Shaft (1.870"OD)(.103" Wide)(Teflon) 2009-Up ..... 2 .....

PART #	WASHERS & BEARINGS	QTY	REFERENCE #

309202A ..... Spacer Ring, ZF8HP55 Pump Drive To Stator (1.795"OD)(1.600"ID)(.116"Thick) 2009-Up ..... 1 .....
309203A ..... Cup Race, ZF8HP55 Pump Drive To Stator Retainer (2.185"OD)(1.630"ID) 2009-Up ..... 1 .....
309205A ..... Needle Bearing, ZF8HP55 Rear Pump (2.045"OD) 2009-Up ..... 1 .....
309206A ..... Ball Bearing, ZF8HP55 Torsen (Rear)(15 Balls)(2.675"OD)(1.575"ID)(.350"Thick) 2009-Up ..... 1 .....
309209A ..... Needle Bearing, ZF8HP55 Stator (Rear)(1.515"OD)(.450"Thick) 2009-Up ..... 1 .....
309214A ..... Bearing W/Races, ZF8HP55 C Clutch Hub To P4 Sun Gear (.195"Thick)(1.900"OD)(1.245"ID)
..... 2009-Up ..... 1 .....
309222A ..... Race, ZF8HP55 P3 Sun Gear To Planet (Stepped)(2.860"OD)(2.235"ID) 2009-Up ..... 1 .....
309223A ..... Bearing W/Race, ZF8HP55 Sun Gear To P3 Planet (.155"Thick)(2.855"OD)(2.250"ID) 2009-Up 1 .....
309232-1A ..... Cupped Race, ZF8HP55 Bearing To A Clutch Hub (2.705"OD) 2009-Up ..... 1 .....
309232A ..... Bearing W/Race, ZF8HP55 A Clutch Hub (Front)(2.653"OD)(.156"Thick) 2009-Up ..... 1 .....
309233A ..... Bearing W/Race, ZF8HP55 A Clutch Hub To P1 Planet Ring Gear (2.654"OD)(2.008"ID)
..... (.156"Thick) 2009-Up ..... 1 .....
309234A ..... Race, ZF8HP55 A Clutch Hub To P1 Planet Ring Gear (.101"Thick)(2.788"OD)(2.082"ID)
..... 2009-Up ..... 1 .....
309235A ..... Bearing W/Races, ZF8HP55 E Clutch Hub To C Clutch Hub (.195"Thick)(1.895"OD)(1.245"ID)
..... 2009-Up ..... 1 .....
309236A ..... Race, ZF8HP55 Ring Gear To P1 Planet (Front)(Cupped)(3.485"OD) 2009-Up ..... 1 .....
309237A ..... Bearing W/Race, ZF8HP55 Ring Gear To P1 Planet (Front)(3.180"OD)(2.005"ID)(.240"Thick)
..... 2009-Up ..... 1 .....
309239A ..... Washer, ZF8HP55 Ring Gear To P1 Planet (Rear)(Plastic)(6 Tabs)(3.085"ID)(Stepped) 2009-Up 1
309240A ..... Race, ZF8HP55 P2 Planet (Rear)(Cupped)(3.185"OD)(1.920"ID) 2009-Up ..... 1 .....
309241A ..... Bearing W/Race, ZF8HP55 P2 Planet To Sun Gear (Rear)(Cupped)(3.510"OD)(2.275"ID)
..... (.245"Thick) 2009-Up ..... 1 .....
309242A ..... Washer, ZF8HP55 P2 Planet To Sun Gear (Rear)(Plastic)(6 Tab)(Stepped)(3.085"ID) 2009-Up 1 .....
309250A ..... Race, ZF8HP55 P3 Planet To E Clutch Hub (Top Hat)(3.030"OD)(1.980"ID)(.565"Tall) 2009-Up 1 .....
309251A ..... Bearing W/Race, ZF8HP55 P3 Planet To E Clutch Hub (.155"Thick)(2.650"OD)(2.010"ID)
..... 2009-Up ..... 1 .....
309268A ..... Ball Bearing, ZF8HP55 In Rear Housing (11 Balls)(2.445"OD)(1.380"ID)(.545"Thick) 2009-Up .1 .....
309271A ..... Shim, ZF8HP55 Output Shaft To Gear (Selective)(1.730"OD) 2009-Up ..... 1 .....
309272A ..... Shim, ZF8HP55 Case To Output Gear Bearing/Race (Selective) (2.935"OD) 2009-Up ..... 1 .....
309273A ..... Ball Bearing, ZF8HP55 Pinion Shaft (14 Balls)(1.140"Thick)(1.624"ID)(SKF BKH-0005 AD/O)
..... 2009-Up ..... 1 .....
309274A ..... Cone Bearing, ZF8HP55 Pinion Shaft (19 Rollers)(1.625"ID) 2009-Up ..... 1 .....
309275A ..... Spacer, ZF8HP55 Output Gear To Seal (.295"Thick)(1.460"OD)(.710"ID) 2009-Up ..... 1 .....
309276A ..... Shim, ZF8HP55 Pinion To Bearing (Selective)(2.350"OD)(1.640"ID) 2009-Up ..... 1 .....
309278A ..... Race, ZF8HP55 Case To Output Gear Bearing (Tapered) 2009-Up ..... 1 .....
309278B ..... Race, ZF8HP55 Output Gear To Rear Housing (Tapered)(3.145"OD) 2009-Up ..... 1 .....
309279A ..... Bearing, ZF8HP55 Case To Output Gear (Tapered)(23 Rollers) 2009-Up ..... 1 .....
309279B ..... Bearing, ZF8HP55 Output Gear To Rear Housing (Tapered)(24 Rollers) 2009-Up ..... 1 .....
309280A ..... Bearing W/Race, ZF8HP55 Between Idler & Drive Gear (2.545"OD)(1.715"ID)(.149"Thick)
..... 2009-Up ..... 1 .....
309281A ..... Ball Bearing, ZF8HP55 Driven Gear (3.545"OD)(.785"Thick)(10 Balls)
..... (SKF Explorer 6210/C3 063037) 2009-Up ..... 1 .....
309282A ..... Cup Race, ZF8HP55 Idler To Case (Tapered)(2.565"OD)(.547"Thick) 2009-Up
..... (FAG# F-567255TR1-DZ) ..... 1 .....
309283A ..... Cone Bearing, ZF8HP55 Idler To Case (19 Rollers) 2009-Up (FAG# F-567255-TR1-DZ) ..... 1 .....
309284A ..... Shim, ZF8HP55 Idler To Case (2.543"OD)(2.170"ID)(Selective) 2009-Up ..... 1 .....
309288A ..... Cup Race, ZF8HP55 Differential To Cover (3.500"OD)(2.403"ID)(.527"Thick) 2009-Up ..... 1 .....
309289A ..... Cone Bearing, ZF8HP55 Differential To Cover (22 Rollers)(2.125"ID) 2009-Up ..... 1 .....
309290A ..... Shim, ZF8HP55 Differential To Cover (3.482"OD)(3.153"ID)(Selective) 2009-Up ..... 1 .....
309291A ..... Cup Race, ZF8HP55 Differential Bearing To Bell (2.890"OD)(2.475"ID)(.615"Thick) 2009-Up ...1 .....
309292A ..... Cone Bearing, ZF5HP55 Differential To Bell (23 Rollers)(1.780"ID) 2009-Up ..... 1 .....
309293A ..... Shim, ZF8HP55 Differential Bearing To Bell (2.869"OD)(2.522"ID)(Selective) 2009-Up ..... 1 .....
309295A ..... Caged Needle Bearing, ZF8HP55 Front Cover (.475"Thick)(2.350"OD)(Cast # F-560471)
..... 2009-Up ..... 1 .....
309296A ..... Bearing, ZF8HP55 Idler Gear To Rear Housing (Tapered)(24 Rollers)(FAG# H0909-2113-18)
..... (F-567256TR1-DY) 2009-Up ..... 1 .....

© Whatever It Takes Transmission Parts. Inc.

PART #	WASHERS & BEARINGS	QTY	REFERENCE #
309297A	Race, ZF8HP55 Idler To Rear Housing (Tapered)(3.145"OD)(.605"Thick) 2009-Up	1	
309298A	Needle Bearing, ZF8HP55 Idler Gear (Inner)(Front)(1.850"OD)(INA F-556238) 2009-Up	1	
309298B	Needle Bearing, ZF8HP55 Idler Gear (Inner)(Rear)(1.535"OD)(.810"Wide) 2009-Up	1	
309299A	Needle Bearing, ZF8HP55 Idler Gear (Inner)(INA F-562932) 2009-Up	1	

PART #	GASKETS & RUBBER COMPONENTS	QTY	REFERENCE #
309300AW	Gasket, ZF8HP55 Bottom Pan (Bonded Aluminum)(12 Bolt Holes)(3 Small Assembly Holes) 2009-Up	1	
309304A	Gasket, ZF8HP55 Case To Extention Housing (Metal)(18 Round Holes) 2009-Up	1	
309311A	O-Ring, ZF8HP55 Pump (Rear Cover)(.075"Thick)(2.345"OD) 2009-Up	1	
309312A	O-Ring, ZF8HP55 Stator (Outer) (8 1/8")(.107"Thick) 2009-Up	1	
309313A	O-Ring, ZF8HP55 Pump (Front Cover)(2.665"OD)(.074"Thick) 2009-Up	1	
309315A	Seal, ZF8HP55 Pump (Rear Cover)(Teflon W/Bonded Rubber) (.124"Thick)(.755"OD)(.600"ID) 2009-Up	1	
309318A	Gasket, ZF8HP55 Case To Bell Housing (Metal)(19 Bolt Holes)(.015"Thick) 2009-Up	1	
309330A	O-Ring, ZF8HP55 C Clutch Inner Hub (.105"Thick) 2009-Up	2	
309331A	Lip Seal, ZF8HP55 C Clutch Piston (Outer) 2009-Up	1	
309332-1A	O-Ring, ZF8HP55 E Clutch Hub (Rear)(1.765"OD)(.060"Thick) 2009-Up	1	
309332A	O-Ring, ZF8HP55 E Clutch Hub (Rear)(1.805"OD)(.105"Thick) 2009-Up	1	
309333A	Lip Seal, ZF8HP55 E Clutch Piston (Outer) 2009-Up	1	
309334A	Lip Seal, ZF8HP55 A Clutch Piston (Outer) 2009-Up	1	
309335A	Lip Seal, ZF8HP55 A Clutch Piston (Inner) 2009-Up	1	
309336A	O-Ring, ZF8HP55 D Clutch Piston (Inner) 2009-Up	1	
309337A	O-Ring, ZF8HP55 D Clutch Piston Retainer (Outer) 2009-Up	1	
309338A	O-Ring, ZF8HP55 B Clutch Piston (Inner)(7"OD) 2009-Up	1	
309339A	O-Ring, ZF8HP55 B Clutch Piston (Outer)(9 1/4"OD) 2009-Up	1	
309342A	O-Ring, ZF8HP55 Valve Body Neck To Stator (1.215"OD)(.124"Thick)(Top) 2009-Up	1	
309343A	O-Ring, ZF8HP55 Differential Cover To Bell Housing (8 1/16"OD)(.118"Thick) 2009-Up	1	
309347A	O-Ring, ZF8HP55 Case Connector (Inner)(Ribbed)(1.410"OD)(.097"Thick) 2009-Up	1	
309347B	O-Ring, ZF8HP55 Case Connector (Outer)(Ribbed)(1.555"OD)(.130"Thick) 2009-Up	1	
309348A	O-Ring, ZF8HP55 Rear Cover To Rear Housing (5.565"OD)(.120"Thick) 2009-Up	1	
309356A	O-Ring, ZF8HP55 C Clutch Inner Hub (.082"Thick)(1.210"ID) 2009-Up	1	
309357A	O-Ring, ZF8HP55 C Clutch Inner Hub (.082"Thick)(1.190"ID) 2009-Up	1	
309371A	Seal, ZF8HP55 Fill Plug (Case)(Passenger Side)(.970"OD) 2009-Up	1	
309373A	Seal, ZF8HP55 Fill Plug To Bell (.840"OD)(.625"ID)(.059" Thick) 2009-Up	2	
309379A	O-Ring, ZF8HP55 Filter Neck (1.315"OD)(.170"Thick) 2009-Up	1	
309380A	O-Ring, ZF8HP55 Input Shaft (Front) 2009-Up	1	
309382A	O-Ring, ZF8HP55 Valve Body Tube To Stator (Bottom)(.930"OD) 2009-Up	2	
309385A	Tube, ZF8HP55 Valve Body To Case (Rubber)(1.210"Long)(.465"OD) 2009-Up	1	
309387A	Seal, ZF8HP55 Drain Plug To Rear Housing (4x4)(Lathe Cut)(.057"Thick)(.570"OD) 2009-Up (Also Fits ZF8HP55 Extension Housing Drain Plug)	1	
309387B	O-Ring, ZF8HP55 Drain Plug To Pan (.760"OD)(.068"Thick) 2009-Up	1	
309389A	O-Ring, ZF8HP55 H.I.S. Pump to Case (.695"OD)(.095"Thick) 2009-Up	1	

PART #	TECHNICAL MANUALS	QTY	REFERENCE #
319400A	Technical Manual, ZF8HP55 (ATSG)	1	

PART #	ELECTRICAL COMPONENTS	QTY	REFERENCE #
309418A	Solenoid, ZF8HP55 Solenoid Valve (Brown/Black Connector) (8V/Q-550KPA)(2.220" Long) 2009-Up	1	
309421A	Solenoid, ZF8HP55 EPC Clutch A (Orange Connector) 2009-Up (2.595"Long)	1	
309422A	Solenoid, ZF8HP55 EPC Clutch B (Orange Connector) 2009-Up (2.595"Long)	1	
309423A	Solenoid, ZF8HP55 EPC Clutch C (White Connector) 2009-Up (2.595" Long)	1	
309425A	Solenoid, ZF8HP55 EPC Lock-Up (Orange Connector) 2009-Up (2.595"Long)	1	
309427A	Solenoid, ZF8HP55 EPC Clutch E (Orange Connector) 2009-Up (2.595" Long)	1	
309431A	Solenoid, ZF8HP55 EPC (System Pressure)(White Connector) 2009-Up (2.595"Long)	1	
309440A	Solenoid, ZF8HP55 EPC Clutch D (Orange Connector) 2009-Up (2.595"Long)	1	
309444A	Case Connector, ZF8HP55 (1 Bolt Bracket)(Hollow Twist Lock)(2 Ribbed Rubber Seals) 2009-Up	1	
309445A	Wire Harness, ZF8HP55 2009-Up (Has 16 Pin Round Connector, 11 Wire Flat Connector) (Enclosed In Plastic)	1	
309446A	Wire Harness, ZF8HP55 W/Input, Output & Temp Sensor 2009-Up (Has One-2 Wire, One-16 Blade & Eight-2 Blade Connectors)	1	
309467-1A	Bolt Set, ZF8HP55 H.I.S. Pump To Case (T40)(3 Pieces) 2009-Up (2 Bolts .975"Long & 1 Bolt 2.505"Long)	1	

© Whatever It Takes Transmission Parts. Inc.

309467A .....H.I.S., ZF8HP55 (Hydraulic Impulse Oil Storage)(Electric Pump) 2009-Up .....1 .....

PART #	MISCELLANEOUS COMPONENTS	QTY	REFERENCE #

309489A .....Dust Boot, ZF8HP55 (Rear Seal)(Plastic)(2.215"OD)(1.390"ID)(.385"Thick)(8 Notches) .....2009-Up .....1 .....
309492A .....Drain Plug, ZF8HP55 Rear Housing (4x4) (6mm Allen)(.565"Long) 2009-Up .....1 .....
309492B .....Drain Plug, ZF8HP55 Rear Housing (Alum)(8mm Hex)(.675"Long) 2009-Up (Use 309494A) ....1 .....
309493A .....Fill Plug, ZF8HP55 (In Case) (Passenger Side)(10mm Hex) 2009-Up .....1 .....
309494A .....Fill Plug, ZF8HP55 (Aluminum) On Top Of Bell (8mm Hex)(.675" Long) 2009-Up .....2 .....
309494B .....Drain Plug, ZF8HP55 Pan (5mm Hex)(.535"Long)(.865"OD Head) 2009-Up .....1 .....
309495A .....Connector Tube, ZF8HP55 Valve Body To Stator (1.570"Long) (Aluminum) 2009-Up .....1 .....

PART #	HARDPARTS	QTY	REFERENCE #

309507-3A .....Spring, ZF8HP55 Pump (Rear Cover)(Dished) 2009-Up .....1 .....
309509A .....Pump Housing, ZF8HP55 (Rear)(Aluminum)(4 Bolt)(Cast #1084437020) 2009-Up .....1 .....
309520-1A .....Stator, ZF8HP55 Aluminum W/Tube (Cast# 1087-410-161) 2009-Up (45 Spline)(5.810"Tall) .....
309520A .....Cover, ZF8HP55 Pump (Front)(Alum) 2009-Up .....1 .....
309525A .....Chain, ZF8HP55 Pump Drive (33 Links)(.240"Thick)(Mouse Ear Links) 2009-Up .....1 .....
309526A .....Sprocket, ZF8HP55 Pump Drive (34 Teeth W/53 Spline Hub) (2.095" Long) 2009-Up .....
309527A .....Sprocket, ZF8HP55 Pump Driven W/Shaft (31 Teeth)(2.145"Long) (4 Slots)(2 Snap Ring .....Grooves)(18 Splines) 2009-Up .....
309528A .....Cover, ZF8HP55 Pump (Rear) (Aluminum) 2009-Up .....1 .....
309531A .....Pump Gear Set, ZF8HP55 Rear Pump Housing (4 Teeth Inner / 5 Teeth Outer Lobe)(.380"Thick) .....(1.745"OD) 2009-Up .....1 .....
309532A .....Rotor, ZF8HP55 Pump (.590"Thick) (12 Vane Slots) 2009-Up (2 Outer Grooves) .....1 .....
309533A .....Vane, ZF8HP55 Pump Rotor (.039"Thick)(.284"Wide) 2009-Up .....1 .....
309534A .....Outer Slide, ZF8HP55 Pump (.591"Thick)(2 Outer Lugs) 2009-Up .....1 .....
309535A .....Pin, ZF8HP55 Pump Outer Slide (1.082"Long)(.157"OD) 2009-Up.....2 .....
309543A .....Drive Pin, ZF8HP55 Rear Pump Housing (1.850" Long)(.500"OD) 2009-Up .....1 .....
309557A .....Hub, ZF8HP55 D Clutch (Aluminum)(Cast #1087-478-030)(6 7/8"Tall) 2009-Up .....1 .....
309562A .....Piston Kit, ZF8HP55 E Clutch 2009-Up .....1 .....
309564A .....Piston Kit, ZF8HP55 A Clutch (Piston Cast #1087 470 023) 2009-Up .....1 .....
309570-1A .....Hub, ZF8HP55 C Clutch (Inner) (W/2 Inner & 2 Outer O-Rings) 2009-Up .....1 .....
309570A .....Hub, ZF8HP55 C Clutch (Outer) (Alum)(Cast #1087 475 012) 2009-Up .....1 .....
309574A .....Hub, ZF8HP55 E Clutch (Aluminum) (Cast #1087-471-023)(24 Outer Clutch Teeth)(38 Splines) .....2009-Up .....1 .....
309580A .....Planet, ZF8HP55 P2 (3 Gear) (48 Teeth Sun Gear) 2009-Up .....1 .....
309582A .....Planet, ZF8HP55 P1 (3 Gear) (48 Teeth Sun Gear) 2009-Up .....1 .....
309584A .....Planet, ZF8HP55 P3 (3 Gear) (Aluminum)(69 Teeth Sun Gear) 2009-Up .....1 .....
309586A .....Planet, ZF8HP55 P4 W/Output Shaft (3 Gear)(9 1/2"Long) (Bolt On Gear) 2009-Up .....1 .....
309590A .....Ring Gear, ZF8HP55 P2 Planet (24 Lugs) 2009-Up .....1 .....
309592A .....Ring Gear, ZF8HP55 P1 Planet W/Hub (40 Teeth Clutch Hub) 2009-Up .....1 .....
309594A .....Ring Gear, ZF8HP55 P3 Planet (32 Tabs) 2009-Up .....1 .....
309596A .....Ring Gear, ZF8HP55 P4 Planet (104 Teeth)(60 Outer Splines)(1.085"Thick) 2009-Up .....1 .....
309612A .....Sun Gear, ZF8HP55 P1/P2 Planet (48 Teeth)(2.450"Long) 2009-Up .....1 .....
309614A .....Sun Gear, ZF8HP55 P3 Planet (W/24 Tab Hub)(69 Teeth) 2009-Up .....1 .....
309616A .....Sun Gear, ZF8HP55 P4 Planet With C & D Clutch Housing (28 Teeth)(7 7/8"Tall)(32 Clutch .....Splines) 2009-Up .....1 .....
309626A .....Output Shell, ZF8HP55 (Aluminum)(9 15/16"Long) 2009-Up .....1 .....
309670A .....Input Shaft, ZF8HP55 (20 1/2" Long)(32 Converter Splines) 2009-Up .....1 .....
309674A .....Hub, ZF8HP55 A Clutch (32 Clutch Splines)(3.155"Tall)(4.740"OD) 2009-Up .....1 .....
309678A .....Output Shaft, ZF8HP55 4x4 (8 5/8"Long)(48/25 Splines)(.440"OD Pilot) 2009-Up .....1 .....
309696A .....Crush Sleeve, ZF8HP55 Pinion (1.890"OD)(1.635"ID)(1.633"Thick) 2009-Up .....1 .....
309697A .....Oil Deflector, ZF8HP55 Case To Idler Gear (Plastic)(2.205"OD)(1.983"Long) 2009-Up .....1 .....
309699A .....Waved Spring, ZF8HP55 Pump Drive To Stator (1.840"OD)(1.635"ID)(.012"Thick) 2009-Up .....1 .....
309707A .....Gear, ZF8HP55 Drive Gear (32 Teeth)(5" Tall)(43 Splines)(3.735"OD)(No Groove) 2009-Up .....1 .....
309710A .....Gear, ZF8HP55 Output (33 Teeth)(4.970"Long) 2009-Up .....1 .....
309712A .....Gear, ZF8HP55 Driven (31 Teeth)(3.845"OD)(7 1/2"Long) 2009-Up (Transfer Gear) .....1 .....
309713A .....Flange, ZF8HP55 Driven Gear (2 Bolt)(2.480"ID)(.235"Thick)(Two ID Notches) 2009-Up .....1 .....
309714A .....Gear, ZF8HP55 Idler W/Shaft (29 Teeth)(8 1/2"Long)(38 Spline) 2009-Up .....1 .....
309715A .....Differential Assembly, ZF8HP55 (34 Teeth Right Angle)(4.840"Tall Housing)(1.785"OD Nose & .....2.127"OD Nose) 2009-Up .....1 .....
309719A .....Torsen, ZF8HP55 4x4 (4.925" Tall)(4 Holes/8 Pins) 2009-Up .....1 .....
309730A .....Pinion, ZF8HP55 (11 Teeth)(7 7/8" Long)(32 Splines)(Left Hand Threads)(1.626"OD Shaft) .....2009-Up .....1 .....
309731A .....Housing/Tube, ZF8HP55 Side Shaft (Pinion)(13 5/8" Long) (Aluminum)(2.560"OD)(2.400"ID) .....2009-Up .....1 .....
309732A .....Side Shaft, ZF8HP55 Pinion To Output Gear (Hollow) (W/ID Splines)(13 9/16"Long) 2009-Up ..1 .....

© Whatever It Takes Transmission Parts. Inc.

ZF

PART #	HARDPARTS (Continued)	QTY	REFERENCE #
309733A	Vibration Damper, ZF8HP55 Bolts To Extension Housing (Rubber) (3 Bolt) 2009-Up	1	
309735A	Race Assembly, ZF8HP55 Pinion Bearing Retainer (2.990" Long) (3.606"/3.350"OD)(2 Holes) 2009-Up	1	
309740A	Valve Body, ZF8HP55 (9 Solenoids)(HIS Type)(B071 & A071 On Plate)(Cast # 1087 427 177 On Case Side)(Cast # 1087 427 124 On Filter Side) 2009-Up	1	
309749A	Manual Valve, ZF8HP55 In Valve Body (Aluminum)(4 Lands)(4.940"Long) (.588"OD) 2009-Up	1	
309750A	Bell Housing, ZF8HP55 (8 1/8"Thick) (3 3/4"Top Bolts) (9:00 Starter)(11 Differential Cover Bolts) (1087 435 079) 2009-Up	1	
309758A	Cover, ZF8HP55 Differential (Aluminum) (11 Bolt To Bell)(3 Threaded Holes & 1 Drain Plug) (1087 435 041) 2009-Up	1	
309759A	Rear Housing, ZF8HP55 (Aluminum) 4x4 (15 Bolts To Case)(6 Bolt Rear Cover) (Cast #1084 437 086A)(5 3/4" Long) 2009-Up	1	
309760A	Case, ZF8HP55 (15 Bolts To Bell Housing)(12 Pan Bolts)(15 Bolts To Extension Housing) 2009-Up	1	
309765A	Pan, ZF8HP55 Bottom (Aluminum)(Cast #0501216377) 2009-Up	1	
309770A	Extension Housing, ZF8HP55 (6 Bolt)(Aluminum)(5 7/8" Long)(5 Threaded Bosses) (2.032"OD Seal)(Cast #1084 436 007) 2009-Up	1	
309776AK	Bolt Set, ZR8HP55AF Bell To Case (Aluminum)(T40)(15 Pieces) (1-1.490"Long & 14-1.185"Long) 2009-Up	1	
309777AK	Bolt Set, ZF8HP55 Pump To Case (15 Pieces)(14 Pieces T50 x 3.170" Long (Aluminum) & 1 Piece T30 x 1.730"Long (Steel) 2009-Up	1	
309778-1AK	Bolt Set, ZF8HP55 Rear Housing To Case (15 Pieces)(4-Steel x 2.310 Long) (11-Aluminum x 1.985"Long)(T40) 2009-Up	1	
309778AK	Bolt Set, ZF8HP55 Stator To Cover (7 Pieces)(Aluminum)(6 Pieces T40 x 1.142"Long) (1 Piece T40 x 1.730"Long) 2009-Up	1	
309779AK	Bolt Set, ZF8HP55 Pan To Case (T40)(Aluminum)(.960"Long)(.468"OD)(12 Pieces) 2009-Up	1	
309780A	Bolt Set, ZF8HP55 Extension Housing To Rear Housing (6 Pieces)(T40)(Aluminum)(1.985"Long) 2009-Up	1	
309782AK	Bolt Set, ZF8HP55 Holds Valve Body To Case (14 Pieces)(T40) 2009-Up (2.510" Long)	1	
309785AK	Bolt Set, ZF8HP55 Holds Differential Cover To Bell Housing (11 Pieces)(T40 x 1.775"Long) 2009-Up	1	
309787AK	Bolt Set, ZF8HP55 Holds Driven Flange To Case (T40)(1.385" Long) 2009-Up	2	
309788AK	Bolt Set, ZF8HP55 Vibration Damper To Tail Housing (Steel)(T40)(1.025"Long)(3 Pieces) 2009-Up	1	
309790AK	Bolt Set, ZF8HP55 Rear Pump Housing To Rear Housing (T40 Torx)(1.170" Long)(4 Pieces) 2009-Up	1	
309796A	Nut, ZF8HP55 Pinion (1.540"ID)(.468"Thick)(55mm, 6pts Left Hand Threads) 2009-Up	1	
309798A	Bolt, ZF8HP55 Output Gear To Output Shaft (T50 Torx)(1.210"Long) 2009-Up	1	
309838A	Axle Flange, ZF8HP55 Differential Side (3.150"Tall)(37 Splines)(6 Threaded Holes) 2009-Up	1	
309839A	Magnet, ZF8HP55 Pan (.760"Tall x 1.275"OD Neck)(No Bolt Holes)(Cast #0501217.777) 2009-Up	2	
309860A	Snap Ring, ZF8HP55 Holds Needle Bearing In Stator (Rear)(1.615"OD)(.069"Thick) 2009-Up	1	
309862A	Snap Ring, ZF8HP55 Holds C Clutch Piston In (.094"Thick)(1.905"OD) 2009-Up	1	
309868A	Snap Ring, ZF8HP55 Holds P3 Sun Gear To Ring Gear (.073" Thick)(6.480"OD) 2009-Up	1	
309874A	Snap Ring, ZF8HP55 E Clutch Piston To Hub (.113"Thick)(1.830"OD) 2009-Up	1	
309876A	Snap Ring, ZF8HP55 Holds A Clutch Pressure Plate In (Selective) 2009-Up	1	
309877A	Retainer, ZF8HP55 A Clutch Piston Spring (2 Piece) 2009-Up	1	
309878A	Snap Ring, ZF8HP55 Holds D Clutch Pressure Plate In (Selective)(7 3/8"OD) 2009-Up	1	
309879A	Snap Ring, ZF8HP55 Holds P4 Ring Gear To Output Shell (.050"Thick)(7 1/4"OD)(.230"Wide) (2 Eyelets) 2009-Up	1	
309880A	Snap Ring, ZF8HP55 Holds Input Shaft To P2 Planet (.071"Thick)(1.860"OD) 2009-Up	1	
309886A	Snap Ring, ZF8HP55 Holds Front Bearing In Drive Gear (1.950"OD)(.058"Thick)(.090"Wide) 2009-Up	1	
309887A	Snap Ring, ZF8HP55 Holds Ball Bearing On Driven Gear (.118"Thick)(2 Eyelets)(2.085"OD) 2009-Up	1	
309888A	Snap Ring, ZF8HP55 P3 Planet To D Clutch Hub (.072"Thick)(7.365"OD) 2009-Up	1	
309889A	Snap Ring, ZF8HP55 Holds Ring Gear To E/C Clutch Drum (.075"Thick)(6.900"OD) 2009-Up	2	
309890A	Snap Ring, ZF8HP55 Holds Bearing In Rear Pump Housing (2.145"OD)(.055"Thick)(.085"Wide) 2009-Up	1	
309891A	Snap Ring, ZF8HP55 Holds Output Shaft Bearing To Rear Housing (.075"Thick)(2.575"OD) 2009-Up	1	
309892A	Snap Ring, ZF8HP55 P1 Planet To Output Shell (7.770"OD)(.075"Thick) 2009-Up	1	
309893A	Snap Ring, ZF8HP55 Holds Axle Flange To Spider Gears (1.220"OD)(.096"Thick) 2009-Up	1	
309894A	Snap Ring, ZF8HP55 Holds Race Assembly To Bell (3.867"OD)(.154"Thick)(2 Eyelets) 2009-Up	1	
309895A	Snap Ring, ZF8HP55 Output Shaft To Torsen Bearing (.055"Thick)(1.530"OD)(2 Eyelets) 2009-Up	1	
309896A	Snap Ring, ZF8HP55 Holds Rotor To Pump Shaft (.032"Thick)(.362"OD) 2009-Up	1	

© Whatever It Takes Transmission Parts. Inc.

309897A.....Snap Ring, ZF8HP55 Holds Rear Pump Cover To Pump Shaft (.032"Thick)(.316"OD) 2009-Up 1
309898A.....Snap Ring, ZF8HP55 Holds Bearing In Pump Cover (2.485"OD)(.056"Thick) 2009-Up 1
309899A.....Snap Ring, ZF8HP55 Holds Dished Spring To Pump Cover (.039"Thick)(2.360"OD)(.051"Wide)
.....2009-Up 1
309956A.....Housing, ZF8HP55 B Clutch Piston (Bonded)(1.130"Thick)(9 1/4"OD) 2009-Up 1
309960A.....Piston, ZF8HP55 C Clutch (Aluminum)(3.765"OD)(1.760"ID)(.735"Thick) 2009-Up 1
309962A.....Piston, ZF8HP55 E Clutch (Aluminum)(Cast #1087 471 019) 2009-Up 1
309964A.....Piston, ZF8HP55 A Clutch (Aluminum)(Cast # 1087 470 023)(5.678"OD (3.923"ID)(.835"Thick)
.....2009-Up 1
309965A.....Piston, ZF8HP55 D Clutch (6.677"OD)(2.450"ID)(1.215"Thick) 2009-Up 1
309966A.....Piston, ZF8HP55 B Clutch (Aluminum)(Cast #1087 472 044) 2009-Up 1
309970A.....Spring, C Clutch Piston Return (.065"Thick)(4.495"OD) 2009-Up 1
309972A.....Spring, ZF8HP55 E Clutch Piston Return (.070"Thick)(4.510"OD)(8 Lugs) 2009-Up 1
309974A.....Spring, ZF8HP55 A Clutch Piston Return (5.240"OD) 2009-Up 1
309975A.....Spring, ZF8HP55 D Clutch Return (.077")(4.960"OD)(12 Fingers) 2009-Up 1
309980A.....Piston/Retainer, ZF8HP55 C Clutch (Bonded)(6.150"OD) 2009-Up 1
309982A.....Piston/Retainer, ZF8HP55 E Clutch (Bonded) 2009-Up 1
309985A.....Retainer, ZF8HP55 D Clutch Piston (Steel)(5.015"OD) 2009-Up 1
309991AK.....Linkage Assembly, ZF8HP55 2009-Up (Contains: 991-2, 991-3, 991-5, 992).....1
309991-2A.....Spring, ZF8HP55 Rooster Comb Detent (3.700"Long Tapered Body)(.196"OD Roller) 2009-Up 1
309991-3A.....Rooster Comb, ZF8HP55 (.393" ID Hole)(1.513"Long)(Cast # 1087306072)(5 Positions)
.....2009-Up 1
309991-5A.....Roll Pin, ZF8HP55 Holds Manual Shaft To Rooster Comb 2009-Up 1
309992A.....Linkage, ZF8HP55 External (.392"Ball)(.392"Shaft)(3.033"Long) 2009-Up 1
309994A.....Park Rod Actuator, ZF8HP55 (8 7/8"Long) 2009-Up 1
309995A.....Park Pawl Assembly, ZF8HP55 (Internal)(6 Pieces) 2009-Up 1

© Whatever It Takes Transmission Parts. Inc.

Miscellaneous Filters (General Motors)

	14018A ..... Filter, 4T40E/4T45E In Valve Body (Round Tube W/O-Ring)
	24015..... Filter, 4L30E PWM Solenoid (In Vave Body)
	34016..... Sceen, 4L80E TCC/PWM Solenoid (Thimble Type) 1991-Up
	34018..... Sceen, 4L80E Force Motor/ Pressure Control 1991-Up
	34018A ..... Screen, 4L80E Shift Solenoid 1991-Up (With O-Ring)
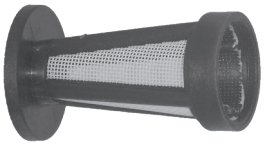	44012..... Screen, 250/250C/350/350C Pump 1969-86
	44014..... Screen, 250/250C/350/350C Governor 1969-86 ..... (Also Fits 700R4 Governor & TCC)
	54016B ..... Filter, 200-4R Pump Solenoid (Tapered) 1981-90 ..... (Also Fits 180/180C/400 Governor)
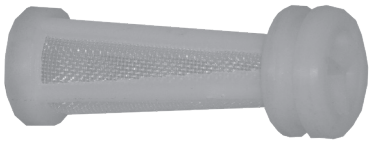	74014..... Screen, 700R4/4L60E/4L65E/4L70E Pump 1982-Up
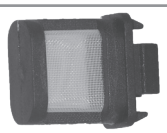	74016A ..... Filter, 4L60E/4L65E/4L70E Solenoid (Small Rectangular) ..... Snaps On Valve Body Plate
	74016P ..... Filter, 4L60E/4L65E/4L70E Pressure Control Solenoid ..... (Large Rectangular) Snaps On Valve Body Plate
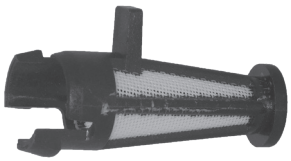	84012..... Screen, 440-T4/4T60E/4T65E Oil Pump Pressure 1983-Up
	84016E ..... Screen, 4T60E Shift Solenoid 1991-Up 84016EK.... Screen Kit, 4T60E Force Motor Solenoid ..... (4 Piece Kit) 1991-Up

© Whatever It Takes Transmission Parts, Inc.

1-800-940-0197

Miscellaneous Filters (General Motors)

	84016PA .... Screen, 440-T4/4T60E TCC Solenoid L1985-Up
	84017A ..... Screen, 4T60E/4T65E 2-1 Servo (Goes In #904 Housing) 1991-Up
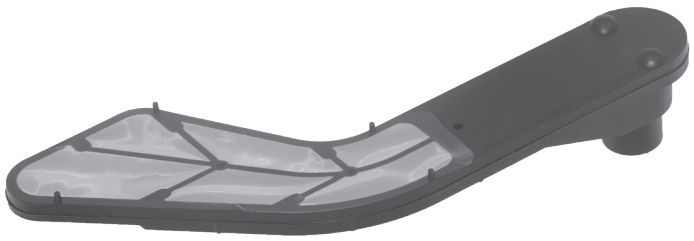	94013A ..... Filter, 4T80E Left Scavenger ..... 1993-Up 94379B ..... Boot, 4T80E Left & Right Scavenger ..... Filter 1993-Up 94013BK.... Filter Set, 4T80E LEft & Right ..... Scavengers & Boots 1993-Up
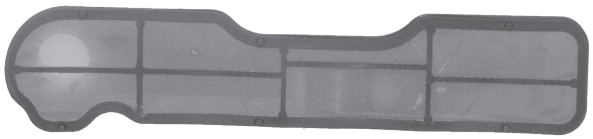	94013B ..... Filter, 4T80E Right Scavenger ..... 1993-Up 94379B ..... Boot, 4T80E Left & Right Scavenger ..... Filter 1993-Up
	116013A..... Filter, 1000 Series Allison (Spin-On) External

Miscellaneous Filters (Chrysler)

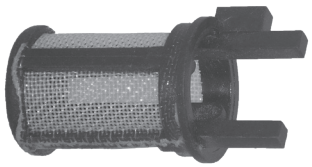	12018..... Screen, 904/A500/A727/A518/A618/48RE Valve Body ..... Regulator Feed Line (Also Fits A604/606)
	32014..... Filter, A404/413/470/670 Governor (Thimble Type)
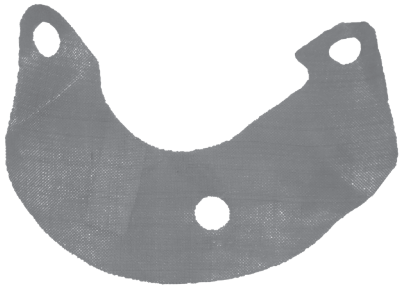	32014A ..... Screen, A404/413/470/670 (Bolts Under Governor) ..... (Flat)(3 Bolts)

© Whatever It Takes Transmission Parts, Inc.

Miscellaneous Filters (Chrysler)

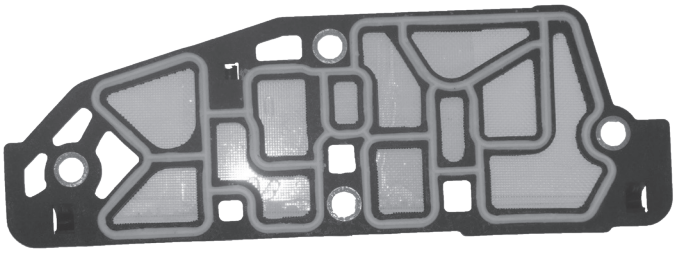

62016..... Filter/Plate, A606 Solenoid Assembly To
..... Valve Body



72013A ..... Filter, 45RFE/68RFE
..... Cooler (Spin-On)
..... 1999-Up

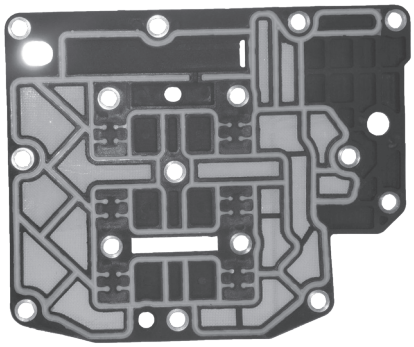

72016A ..... Screem, 45RFE/5-45RFE Solenoid
..... Assembly 1999-03

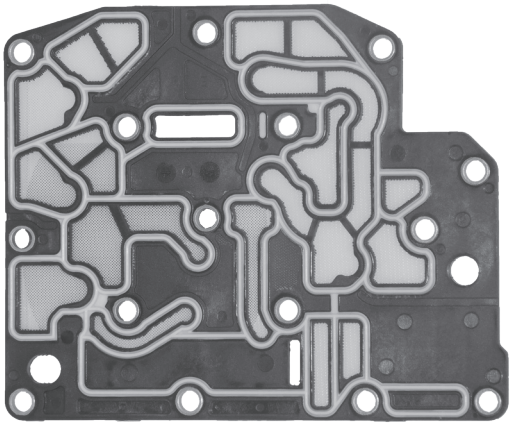

72016B ..... Screen, 45RFE/5-45RFE/68RFE
Solenoid Assembly 2004-Up

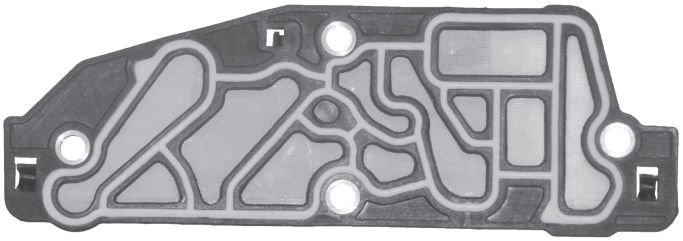

82016A ..... Filter/Plate, 42RLE Solenoid Assembly To Valve Body 2003-Up

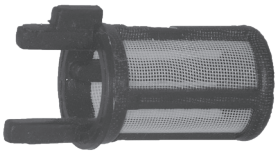

92015..... Screen, A604/A606 Low/Reverse Piston
..... Feed (Orifice, Black) (Also Fits 42RLE)

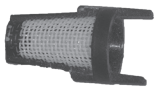

92016..... Screen, A604 Solenoid

© Whatever It Takes Transmission Parts. Inc.

Miscellaneous Filters (Ford)

	16014A ..... Screen, 5R55N/5R55S/5R55W Reverse Servo Housing ..... (# 914) 1999-Up
	25016A ..... Filter Plate, 6F50/55 6T70/75 ..... Solenoid Assembly To Valve ..... Body Plastic Beaded) 2007-Up
	36016..... Screen, E4OD/4R100 Solenoid
	36018..... Screen With Spring, E40D Intermediate Accumulator 1991-96
	56016..... Screen, A4LD TCC Solenoid
	76012H ..... Screen, 4R70W /4R75W/4R70E/4R75E Pump (In Case ..... Above Valve Body) 2004-Up
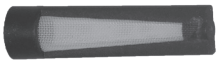	76014..... Screen, AOD Governor
	76016..... Screen, AODE/4R70W/4R75W/4R70E/4R75E Solenoid ..... Feed 1992-Up (In Valve Body)
	86015A ..... Filter, 4F50N/AX4N In Valve Body (Black Retangle Box)
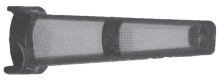	86016..... Screen, AXOD/AXODE/AX4S/AX4N Bypass Solenoid ..... 1986-Up (Thimble Type)
	13013A ..... Cartridge Filter, 5R110W(“ The Trap”)(External)(2003-Up) 136013AK.. Filter, 5R110W By-Pass (Cartridge Element)(With O-Ring) ..... 2003-Up 136013B .... Filter, 5R110W Inline (Metal) (Uses 2 Inlet Lines & ..... 2 Outlines) 2007-Up

© Whatever It Takes Transmission Parts, Inc.

Miscellaneous Filters (Honda)



20013E ..... Filter, BAYA/ BGFA/ BGHA/ BVGA-5 /
..... BVGA-6 / BVGA-7 / BYBA / B7WA /
..... MFYA MGFA /MGHA / MGSA / M7WA /
..... PVGA (SCREW-IN)



20013EA.... Filter, BAYA / BGRA / BYBA / BVGA-5 /
..... BVGA-6 / BVGA-7 / PVGA Cartridge
..... Type (Under A 3 Bolt Cover)(Acura TL
..... 2004-06, BDGA 2006-07)



70018C ..... Screen, MPWA (In Valve Body & In Pump) (.570"OD)(.125"Thick Rubber
..... Boot) (Also Fits Some 20/30/60/80/90 Series Valve Bodies)
70018CA.... Screen, MPWA (In Valve Body & In Pump) (.662"OD)(.315" Thick Rubber
..... Boot) (Also Fits Some 20/30/40/60/80/90/170 Series Valve Bodies)



140013A .... Filter, M4VA/MHTA/SZCA (CVT)
..... (Cartridge Type) 1996-Up

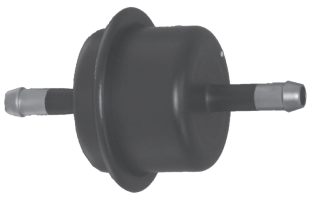

180013A .... Filter, B8BA/B90A/B97A/BCLA/BRZA/
..... M8EA/M91A/M9RA/MCLA/MCTA/MNZA/
..... MPCA/MT4A/SMLA/SMRA/SPCA/SPSA
..... (Cartridge Type) 2004-Up

Miscellaneous Filters (Toyota)

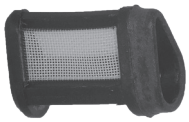

97015B ..... Filter, A340 Accumulator (Goes In The
..... Valve Body) 2000-Up



97015C ..... Filter, A340 Regulator (Goes In The Valve
..... Body) 2000-Up

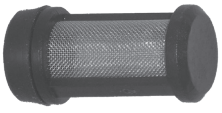

Filter, U340E/U341E/U341F Inside Valve Body (W/O-Ring)

© Whatever It Takes Transmission Parts. Inc.

Miscellaneous Filters (Foreign)



10013A ..... Filter, Saturn (Spin-On) 1991-Up



23013E ..... Filter, EC8(Subaru) Spin-On 1999-Up



41013A ..... Filter, F4A41/42/51 (Spin-On) (Some
..... Early) 1996-Up



42015A ..... Filter, A4AF1/A4AF2/
..... A4AF3/ A4BF1/A4BF2/
..... A4BF3 In Valve Body
..... (Flat Plastic)(L Shaped)



206013A .... Filter, CFT30 (ZF, CVT) Cartridge
..... 2005-Up



212013A .... Cartridge Filter, RE0F10A (JF011E)
..... (Nissan)(Under Cooler)(2.485"Tall)
..... (1.435"OD)
212013B .... Cartridge Filter, RE0F10A (JF011E)
..... (Nissan)(Under Cooler) (1.915"Tall)
..... (1.705"OD)



323013A .... Filter, RE0F11A (JF015E) Auxiliary
..... External (1.435"OD) (2.560"Long)
..... (Cartridge Type W/ Seal) 2013-16
..... (Also Fits RE0F10D(JF016E) Auxiliary
..... External Filter 2013-Up)

© Whatever It Takes Transmission Parts, Inc.

Inline Filters





M010F ..... Filter, Inline (3/8” Hose) (Ford OE)
M010M..... Filter, Inline (5/16” Hose) “MAGNEFINE”
M010MG..... Filter, Inline (3/8” Hose) “MAGNEFINE”
M010MJ..... Filter, Inline (1/2” Hose) “MAGNEFINE”
M010S ..... Filter, Inline (5/16” Hose) “SEALED POWER” (Contains; Filter, 2 Hoses, & ..... 4 Clamps)
M010SG ..... Filter, Inline (3/8” Hose) “SEALED POWER” (Contains; Filter, 2 Hoses, & ..... 4 Clamps)
M010SJ ..... Filter, Inline (1/2” Hose) “SEALED POWER” (Contains; Filter, 2 Hoses, & ..... 4 Clamps)
OC-Watch Dog ..... Superior Watch Dog Plus Monitor & Drain Back Valve/Filter (Use On 3/8” & ..... 5/16” Return Cooler Line)(Superior)

Vaccum T’s, Clamps & Hoses

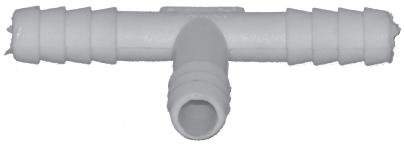

44487D ..... Plastic T (3 Way) 3/16”
44487E ..... Plastic T (3 Way) 1/4”
44487F ..... Plastic T (3 Way) 5/16”

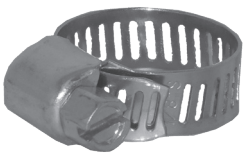

M460HC .... Mini Hose Clamp 5/16” - 7/8” (10 Per Pack)(Must Sell 10)
M460HD .... Mini Hose Clamp 7/16” - 1” (10 Per Pack)(Must Sell 10)



M460A-50 .. Hose, Vacuum (7/32”)(50’ Roll)
M460CA..... Hose, Cooler (11/32” X 25’)(Gas Applications Only)
M460DA..... Hose, Cooler (3/8” X 25’)(Gas Applications Only)
M460FA ..... Hose, Cooler (1/2” X 25’)

© Whatever It Takes Transmission Parts, Inc.

Grommets



22487B ..... Grommet, 904/A727 Cross Shaft Link(Chrysler)



22487C ..... Grommet, 904/A727 Manual Shaft



26487 ..... Grommet, C-4/C-5 Linkage Grommet 5/16" ID
..... (Also Fits BW8-12/FMX/C-3 A4LD/4R44E/4R55E/5R55E/C-6/AOD/
..... ATX) (.670"OD)(.470"Groove)(.220"ID)(.480"Tall)



26487A ..... Grommet, C-4/C-5 Linkage Grommet 5/8" ID
..... (Also Fits C-6/AOD/ATX/AX4S/AX4N)
..... (.715"OD)(.530"Groove)(.265"ID) (.505"Tall)



26487BA .... Grommet, Ford Passing Gear (Wide Groove)(Black)(.588"OD)
..... (.415"Groove)(.215"ID)(.415"Tall)



26487BW ... Grommet,Ford Passing Gear (Narrow Groove) (.565"OD)
..... (.410"Groove)(.230"ID)(.355"Tall)

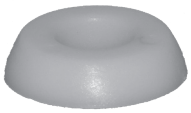

44487B ..... Grommet, GM Linkage (Round, Plastic)



54487A ..... Grommet, 200/200C/200-4R Shift Lever (Black Oval) 1976-Up
..... (Also Fits Some 350/350C)
54487DAK . Grommet Set, 325/325-4L Shift Lever (Black,Round) 79-85
..... (Contains; 1 Grommet & 1 Plastic Sleeve) (Also Fits NP241DHD)



T74498-1 ... Grommet, 4L60E/4L65E/4L70E Shift Cable End To Manual Lever
..... (Also Fits CD4E Cable)((Fits Shift Levers That Have A Groove Cut
..... Into A Straight Shaft)



T74498-1A. Grommet, 4L60E/4L65E/4L70E Shift Cable End To Manual Lever
..... (Also Fits CD4E Cable)(Fits Shift Levers That Have A Bell Or Ball
..... Shaped Shaft)

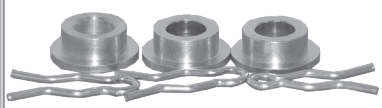

76487AK .... Bushing, AOD Carburator End Of T.V. Rod (Steel Replacement)
..... (3 Per Pack)
D76487AK . Bushing W/Clip, AOD Carburator End Of Linkage(4 Per Pack)



T76498-1 ... Grommet, Ford Shift Cable Repair (Fits Most 1997-08 Trucks &
..... 2002-05 Explorer, Expedition, Navigator & Mountaineer)



T92498-1 ... Grommet, Chrysler Shift Cable Repair (Fits Most 2005-15
..... Chrysler, Dodge, Jeep With 41TE Or 62TE Transmissions)

© Whatever It Takes Transmission Parts, Inc.

Cup / Orifice Plugs







General Motors

45483C ..... Cup Plug, 6L80/6L90 Rear Case 2WD Only (Steel)(1/2"Diameter) (4x4 Does Not Use
..... These, If 4x4 Is Used In A 2WD, These Must Be Installed)
46480H ..... Ball & Capsule, 6T40 Hybrid In Case Under Pump Gasket (.725"Long)(.550"OD) 2012-Up
54480A ..... Ball & Capsule, 200-4R Input Drum 1981-90 (Also Fits 700R4/4L60E Input Shaft)
54483A ..... Cup Plug, 200/200C Park Pawl 1976-87
64484A ..... Cup Plug, 125/125C Servo (Orfice)(In Case) 1980-Up
74480C ..... Ball & Capsule, 700R4/4L60E 3-4 Accumulator (In Case Under Valve Body) 1987-Up
S74480D..... Ball & Capsule Replacement, 700R4/4L60E 3rd Accumulator (Sonnax) (Improve 2-3 Shift Feel)
..... (In Case Under Valve Body)
74480E ..... Ball & Capsule, 700R4/4L60E Under Low/Reverse Piston (In Rear Of Case)
74480F ..... Ball & Capsule, 700R4/4L60E Forward Clutch Piston (.305" Tall)
74480FA ..... Ball & Capsule, 700R4/4L60E Forward Clutch Piston (.250" Tall)
T74481 ..... Orifice Plug, 700R4/4L60E (Used To Modify # 966 Piston) (10 Pieces)(Teckpak)(.178"OD)
74482A ..... Ball & Capsule, 700R4/4L60E Input Drum 1987-Up (Fits Under Piston)
74482AA..... Ball & Capsule, 700R4/4L60E (W/Spring) Input Drum 1987-Up (Fits Under Piston)
..... (3-4 Clutch Rapid Relief Valve)(Superior)
74482B ..... Orifice Plug, 7004R/4L60E Input Drum (Under #230 Spacer)(.173"OD)
74483B ..... Cup Plug, 700R4/4L60E Park Pawl Shaft (Also Fits 200/200C/350/350C/400/4L80E)(.385"OD)
74484S ..... Orifice Plug, 700R4/4L60E Stator (4.3mm)(.170"OD)
T74484T ..... Orifice Plug, 4L60E TCC (In Stator) (.200"/.210"OD) 1996-Up
84480DA..... Capsule W/Check Ball, 440-T4/4T60E Input Drum 1987-Up

Chrysler

12483P ..... Park Reaction Plug, A904/A727
12484..... Orifice Screen, A500/A518/A618 For Overdrive Piston Retainer
72480A ..... Ball & Capsule, 45RFE Drainback Ck Valve 1999-Up (Inside Input Shaft(Rear)
82483A ..... Plug, 42RLE Case(Presses In Top Rear Of Case)2003-Up
92483B ..... Cup Plug, A604 Holds Parking Pawl In Case 1989-03
92484..... Screened Orifice, A604 In Overdrive/Reverse Clutch Piston 1989-Up
..... (Also Fits A606/42RLE/62TE)

Ford

36484G..... Lube Orifice Plug, 4R100 In Rear Of Case 1999-Up (Also Fits 5R110W)
46480H ..... Ball & Capsule, 6T40 Hybrid In Case Under Pump Gasket (.725"Long)(.550"OD) 2012-Up

Nissan

212488A ..... Plug, RE0F10A(JF011E) Nissan/Dodge Pressure In Rear Cover (10mm Allen Head)
..... (.755"Long)(1.095"/.860"OD) 2007-09
333488A ..... Plug, RE0F10D(JF016E) Pressure On Rear Cover (10mm Allen Head)(.925"OD)
..... (.750"Long)(.700"OD RH Threads) 2013-Up

© Whatever It Takes Transmission Parts. Inc.

1-800-940-0197

Pins / Clips



T12497-1 ... Detent Cable Repair Clip (Upper) For Chrysler, Dodge, Plymouth
..... & Jeep Detent Cables 1992-04 RWD Vehicles (Teckpak)



S22487 ..... E-Clip, Chrysler Shift Linkage (10 Per Pack)(Sonnax)



26487C ..... E-Clip, C-4/C-5



34487..... E-Clips, 400 Accumulator Piston Retainer (10 Per Bag)



36495E ..... Clip, E4OD/4R100 Filter(Holds Filter)(2 Per Pack)



44487..... E-Clip, GM



T76496C.... Retaining Clip, AOD/AODE/4R70W Cooler Line Fitting (Plastic,
..... Push-In Type)(For T76996/T76996A/T86996)(Teckpak)



78493-1A... Dipstick Lock Pin, 722.6

Output Shaft Seals



74475..... Seal, 700R4
..... (W/Splines) Input
..... Housing To Output
..... Shaft (Plastic)



74475A ..... Seal, 4L60E
..... (W/Splines) Input
..... Housing To Output
..... Shaft (Viton)

© Whatever It Takes Transmission Parts, Inc.

Torque Converter Nuts & Bolts



General Motors

44775A ..... Converter Nut, 250/250C/350/350C Coarse Thread (No Flange) 1969-86
44775AA..... Converter Nut, 250/250C/350/350C Fine Thread (Self Locking)
44775B ..... Converter Bolt, 250/250C/350/350C/400 Coarse Thread (W/Flange) 1969-86
44775BA..... Converter Bolt, 250/250C/350/350C Fine Thread (No Flange) 1969-86
44775C ..... Converter Bolt, 250C/350C/400/4L80E/700R4/4L60E/4L65E Metric (15mm Hex Head) 1980-00
44775D ..... Converter Bolt, 250/250C/350/350C Coarse Thread(No Flange) 1979-86
64775..... Converter Bolts, 125/125C/440-T4/4T60E (Metric)
74775G..... Bolt, 4L60E/4L65E/4L80E Converter (Metric) (Allen/Hex Head) 2001-Up (Has Both The Allen
..... & The Hex Head)(Longer Thicker Head)

Chrysler

22775..... Bolt, A727/A518/A618/48RE/904/A500 Flex Plate To Converter
32775..... Bolt, A404/A413/A470/A670/A604/A606 Flex Plate To Converter (Sonnax)
44775BA..... Converter Bolt, 250/250C/350/350C/A618/48RE Fine Thread (No Flange) 1969-86

Ford

26775..... Converter Nut, C-4/C-5/C-6/E4OD/AOD/AODE/A4LD/4R44E/4R55E/5R44E/5R55E/5R55N/
..... 5R55S/5R55W) Flange Type (Standard Thread)
26775A ..... Converter Nut, C-4/C-5/C-6/E4OD/AOD/AODE Self Locking (Standard Thread)
26775C ..... Converter Plug, C-4/C-5/C-6 Allen Head
26775D ..... Converter Plug, C-4/C-5/C-6 7/16” Hex Head
66775A ..... Converter Nut, ATX/AXOD/AXODE/AX4S/AX4N/CD4E/G4A Metric

Hyundai / Mitsubishi

42775A ..... Bolt, KM Series Converter (10mm X 1.50” Thread)(Fits CT11 & CT16 Converter)
42775E ..... Bolt, KM Series Converter (10mm X 1.25” Thread)(Fits CT11B & CT16B Converter)

Toyota

57775..... Bolt, A40 Series/A130/A140/A340H/A440F/A440L/A540E Converter (8 X 1.25mm)(Sonnax)
67775..... Bolt, A130/A140/A40 Series/A340H/A440L/A540E Converter (9 X 1.25mm)(Sonnax)

Vent Tubes

32490A ..... Vent, 413/470/670 Case 1995-Up
34490..... Vent, 400/4L80E/200/200C/200-4R/700R4/4L60E Case 1964-Up
44490..... Case Vent Tube, 42RLE/45RFE/68RFE GM Plastic
74490E ..... Vent, 4L60E Case (Metal) 1992-Up
86490-1G... Vent Cap, AXODE/AX4S/AX4N (Rubber)(Fits On The D86490G Vent Tube)1995-99 (This Retro-Fits
..... The Later Vent Tube With The Metal Cap)(Must Use D86490G & D86490-1G Together)
86490G..... Vent Tube, AXODE/AX4S/AX4N (Metal)(Presses In Case Cover) (Uses A Rubber Cap #
..... D86490-1G)1995-99 (This Retro-Fits The Later Vent Tube W/Metal Cap)(Must Use D86490G &
..... D86490-1G Together)
86490H..... Vent, AX4N/4R100 Case 1999-Up
331490A .... Vent Tube, A8LR1 (Rubber)(4 1/4”Tube) 2011-Up

© Whatever It Takes Transmission Parts. Inc.

General Motors Drive Speed-O Gears



Aluminum Powerglide / ST300 (Spline Type)

Tooth Count	Color	Part #	Reference #
7 Teeth	Blue	103847A	6264073
8 Teeth	Natural	103847B	3708144
9 Teeth	Red	103847C	6261796



Aluminum Powerglide / 200 / 400 (Metal Type)

Tooth Count	ID	Part #	Reference #
8 Teeth	1.175"ID	103847PB	
14 Teeth	1.190"ID	54847PB	
15 Teeth	1.380"ID	34847	8629547
16 Teeth	1.190"ID	54847PD	
21 Teeth	1.380"ID	34847AF	

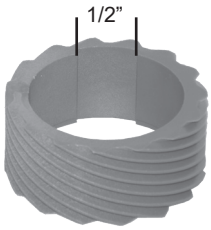

375 /400 (1/2" Wide Slot) (Plastic Type)

Tooth Count	Color	Part #	Reference #
15 Teeth	Grey	34847A	
16 Teeth	Orange	34847B	8623311
17 Teeth	Red	34847C	8629548
18 Teeth	Yellow	34847D	8629549
19 Teeth	White	34847E	8629550
21 Teeth	Black	34847G	8623316

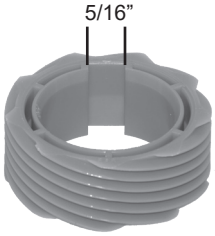

Aluminum Powerglide / 180 / 180C / 250 / 350 / 700R4 (5/16" Wide Slot)

Tooth Count	Color	Part #	Reference #
7 Teeth	Pink	44847	6271537
8 Teeth	Black	44847AD	6261783
8 Teeth	Orange	44847A	12338033
9 Teeth	Green	44847B	6261782
10 Teeth	Blue	44847BD	6261785
15 Teeth	Grey	74847A	8642620
17 Teeth	Red	44847CA	8640517
18 Teeth	Blue	44847DD	1246222
19 Teeth	Yellow	44847DZ	8640519

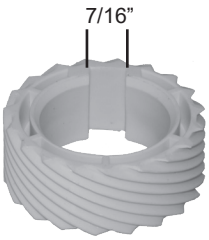

250 / 250C / 350 / 350C (7/16" Wide Slot)

Tooth Count	Color	Part #	Reference #
18 Teeth	Green	44847D	6260037
19 Teeth	Natural	44847DY	8640188

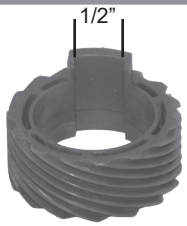

200 / 200C (1/2" Wide Slot)

Tooth Count	Color	Part #	Reference #
15 Teeth	Grey	54847AB	8628794
17 Teeth	Red	54847C	8628793
19 Teeth	Yellow	54847DD	8628891
20 Teeth	Brown	54847E	8628894

© Whatever It Takes Transmission Parts, Inc.

General Motors Drive Speed-O Gears



125 / 125C / 325 / 325-4L / 440-T4

Tooth Count	Color	Part #	Reference #
9 Teeth	Yellow	84847B	8632648
10 Teeth	Green	64847	8632646
12 Teeth	Red	84847C	



4L30E

Tooth Count	Color	Part #	Reference #
7 Teeth	Yellow	24847EA	



400 / 700R4 / 4L60E

Tooth Count	ID	Part #	Reference #
40 Teeth	1.380"ID	34847R	8655315
40 Teeth	1.190"ID	74847P	24202711



125C / 440-T4

Tooth Count	Color	Part #	Reference #
8 Teeth	Metal	64847P	8666642
11 Teeth	Metal	64847PA	8666643
13 Teeth	Metal	64847PB	8664478
14 Teeth	Metal	64847PC	8666644
15 Teeth	Metal	64847PD	8666645

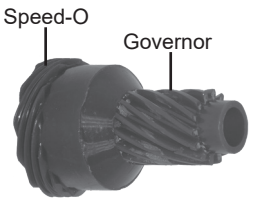

200-4R (Governor / Speed-O Gear)

Tooth Count	Color	Part #	Reference #
10 Teeth	Green	54684BC	8639906
11 Teeth	Orange	54684BA	8634965
12 Teeth	Red	54684B	8634935
13 Teeth	Yellow	54684BB	8634934
14 Teeth	Natural	54684BE	

Speed-O Drive Gear Clips



34849..... Clip, 400 Speed-O Gear
..... 1964-Up



54849A ..... Clip, 200/200C 1976-Up



44849A Clip,250/250C/350/350C
..... Speed-O Drive Gear
..... (Long Narrow Type)
..... 1969-86
..... (Also Fits 700R4)



44849B ..... Clip, 250/250C/350/350C
..... Speed-O Drive Gear
..... (Short Wide Type)
..... 1969-86

© Whatever It Takes Transmission Parts. Inc.

1-800-940-0197

General Motors Driven Speed-O Gears

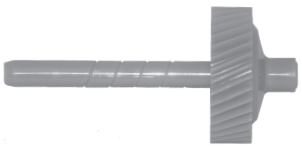

200 / 200C / 375 / 400 / 350 / 350C / 700R

Tooth Count	Color	Part #	Reference #
34 Teeth	Green	34848A	9774413
35 Teeth	Orange	34848B	9780367
36 Teeth	White	34848C	1359270
37 Teeth	Red	34848D	1359271
38 Teeth	Blue	34848E	1359272
39 Teeth	Brown	34848F	1359273
40 Teeth	Black	34848G	1362048
41 Teeth	Yellow	34848H	1362195
42 Teeth	Green	34848HA	1362049
43 Teeth	Purple	34848J	1362196
44 Teeth	Grey	34848K	9780470
45 Teeth	Light Blue	34848L	9775187



TH350 / 250C / 350 / 350C / 180 / 200 / 200C

Tooth Count	Color	Part #	Reference #
18 Teeth	Brown	54848A	3967918
19 Teeth	White	44848	3967919
20 Teeth	Blue	44848A	3967920
21 Teeth	Red	44848B	3967921
22 Teeth	Grey	44848C	3967922
23 Teeth	Black	44848D	3860346
24 Teeth	Yellow	44848E	3860347
25 Teeth	Orange	44848F	3860348



125 / 325 / 325-4L / 200-4R / 440-T4

Tooth Count	Color	Part #	Reference #
27 Teeth	Black	54848BA	410731
28 Teeth	Yellow	54848BB	416765
29 Teeth	Green	54848BC	403999
30 Teeth	Blue	54848BD	561035
31 Teeth	White	54848BE	403417



700R4 (Steel Shaft Type)

Tooth Count	Color	Part #	Reference #
35 Teeth	Orange	74848BA	25513042
36 Teeth	White	74848C	25513043
37 Teeth	Red	74848D	25513044
38 Teeth	Blue	74848EA	25513045
39 Teeth	Brown	74848F	25513046
40 Teeth	Black	74848G	25513047
41 Teeth	Yellow	74848H	25513048
42 Teeth	Green	74848HA	25513049
43 Teeth	Purple	74848J	25513050
44 Teeth	Grey	74848K	25513051
45 Teeth	Blue	74848L	25513052



440-T4 / 125C (Steel Shaft Type)

Tooth Count	Color	Part #	Reference #
27 Teeth	Black	64848D	
28 Teeth	Yellow	64848	
29 Teeth	Dark Green	64848A	
30 Teeth	L Green/Blue	64848B	

© Whatever It Takes Transmission Parts, Inc.

Cooler Adapter / Fittings / Accessories






Cooler Adapters & Fittings

M462AB.....Fitting, 5/16” Male Flared To 1/8” Pipe Thread To Case
M462BR.....Cooler Line Drain Back Valve For All 3/8” Lines
M462F .....Fitting, 5/16” Compression Union (For 5/16” Tube)
M462FA .....Fitting, 3/8” Compression Union (For 3/8” Tube)
M462G.....Fitting, 5/16” Compression To 1/4” Male Pipe Thread
M462K .....Fitting, Compression 3/8” Hose Barb To 5/16” ID Hose
M462KA.....Fitting, Compression 3/8” Hose Barb To 3/8” ID Hose
M462U .....Universal Drain Plug Kit
OC-2001F-1.....Adapter, 3/8” Line W/6” Long Hose(Cooler Flush To Push-In Line Types)(Use W/M465F18 .....& M465KD)
OC-2001F-8.....Adapter, Banjo Fitting(For Smart Blend Cooler Flush)
OC-2001FK .....Cooler Line Fittings Kit (8 Pc Kit For Flushing)(Life)(Smart Blend Fits M465F18)
OC-250.....QUICK-CONNECT Coupler Fits Most 5/16” Trans-lines With 1/2-20 Thread
T-8000 .....Pressure Gauge Fitting Kit Import
T-PG-600.....Pressure Gauge, 600 Lb.
TCR1001 .....5/16” Compression 1/4” NPT Male
TCR1002 .....3/8” Compression 1/4” NPT Male
TCR1003 .....3/8” Hose Barb To 1/4” NPT Male Fitting
TCR1004 .....5/16” Hose Barb To 1/4” NPT Male Fitting
TCR1005 .....5/16” Compression/Union
TCR1006 .....3/8” Compression/Union
TCR1007 .....1/2” Compression 1/4”NPT Male
TCR1008 .....1/4” NPT Fitting Tee
TCR1009 .....1/2” Compression/Union
TCR1010 .....3/8” Hose Barb To 1/2” Compression Fitting
TCR1011 .....3/8” Hose Barb To 3/8” Compression Fitting
TCR1012 .....5/16” Compression/Union (W/One Way Valve Or Drain Back Valve)
TCR1015 .....5/16” Hose Barb To 5/16” Compression Fitting
TCR1016 .....1/2” Compression/Union W/1 Way Valve
TCR1017 .....1/2” Hose Barb To 1/2” Compression Fitting
TCR1018 .....10mm Compression/Union
TCR1019 .....12mm Compression/Union
TCR1020 .....10mm Compression To 3/8” Hose Barb
TCR1021 .....12mm Compression To 1/2” Hose Barb

Cooler Accessories

M460A-50 ..... Hose, Vacuum (7/32”)(50’ Roll)
M460CA..... Hose, Cooler (11/32” X 25’)(Gas Applications Only)
M460DA..... Hose, Cooler (3/8” X 25’)(Gas Applications Only)
M460FA ..... Hose, Cooler (1/2” X 25’)
M460HC ..... Mini Hose Clamp 5/16” - 7/8” (10 Per Pack)(Must Sell 10)
M460HD ..... Mini Hose Clamp 7/16” - 1” (10 Per Pack)(Must Sell 10)
M461A ..... Steel Cooler Line (5/16”)(60” Long)
M461B ..... Steel Cooler Line (3/8”)(60” Long)
OC-163..... Oil Thermostat (Hayden)(For Use With Engine Oil & Transmission Fluid)
OC-251..... Cooler Installation Kit (Hayden)
OC-253..... Metal Mounting Bracket Kit, For 3/4” Thick Coolers
OC-3651 ..... Adjustable Thermostatic Fan Control Thread In Probe (Used With “The Dawg”)
OC-391..... Line Fitting Kit, 5/8” x 18 (45 Degree Fittings)(Jeep)
OC-392..... Line Fitting Kit, 3/8” x 3/8” Hose Splicers (Dodge/Jeep)
OC-394..... Line Fitting Kit, 1/2” x 20 Inverted Flare (Partial Thread)
OC-K210..... Cooler Quik-Mount Kit
OC-K250..... Cooler Quik-Connect Coupler
OC-K252..... Line Fitting Kit, Ford 1983-Up (1/4” x 3/8” NPT Fitting)
OC-K390..... Line Fitting Kit, 5/8” x 18 Inverted Flare
S75998A-4K ..... Remote Cooler Adapter Kit, Volkswagen 096/097/098 (Sonnax)(Replaces Oil Cooler On Top Of ..... Transmission For Use With External Cooler)

© Whatever It Takes Transmission Parts, Inc.

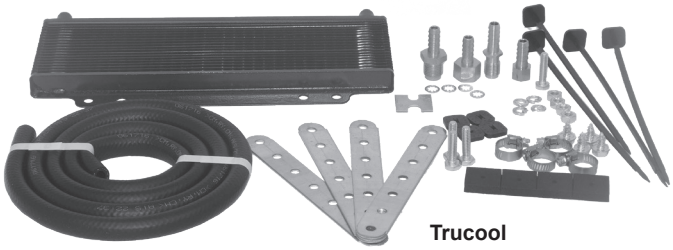

Trucool

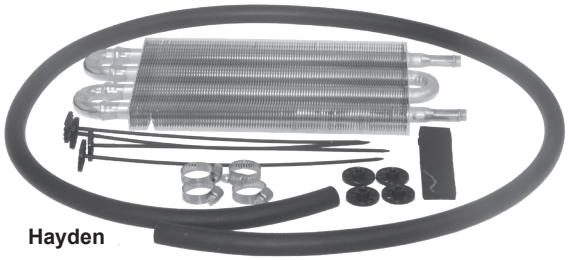

Hayden

Part #	Description
OC-1009	Oil Cooler, Power Steering (Hayden)
OC-1240	Cooler, Heavy Duty 6" X18" X1-1/2"" (One Pass) Hayden
OC-1241	Cooler, Heavy Duty 8"x21"x1-1/2" (One Pass)
OC-1260	Cooler, Allison Heavy Duty One-Pass (12 3/4" x24 x1 1/2")
OC-1268	Cooler, Allison Heavy Duty One-Pass (12 3/4" x18" x1 1/2")
OC-1290	Cooler, Allison Heavy Duty One-Pass (18 3/4" x24" x1 1/2")
OC-1292	Cooler, Allison Heavy Duty One-Pass (25" x24" x 1 1/2")
OC-1298	Cooler, One Pass Heavy Duty (37 1/4" x 40" x 1 1/2")
OC-1299	Cooler, Allison Heavy Duty Two-Pass (22-1/8" 24" x1-1/2")
OC-1401	Cooler, 12,000 LB. 3/4" x5" x12.5" Light Duty
OC-1402	Cooler, 16,000 LB. 3/4" x5" x15-7/8" Medium Duty
OC-1403	Cooler, 18,000 LB. 3/4" x7.5" x12.5" Medium Duty
OC-1404	Cooler, 22,000 LB. 3/4" x7.5" x15-7/8"" Heavy Duty
OC-1405J	Cooler, 26,000 LB. 3/4" X10" X15 7/8"" Heavy Duty
OC-1676	Cooler, Transaver Plus 18,000 3/4" x5 7/8" x11" Lt. Duty
OC-1677	Cooler, Transaver Plus 24,000 3/4" x9.5" x11" Hvy. Duty
OC-1678	Cooler, Transaver Plus 24,000 3/4" x9.5" x11" Hvy. Duty
OC-1679	Cooler, Transaver Plus 30,000 3/4" x11 5/8" x11" Ex.HD
OC-4334	Cooler, 4" X11" X3/4"" (11000 Lb) 3/8"" Hose (Barb Long) Trucool
OC-4451	Cooler, 4" X 11" X3/4 (7,500 BTU) 11/32 Hose (Barb Long) Trucool
OC-4452	Cooler, 5-3/4" X11" X3/4"" (9800 BTU) 11/32"" Hose (Barb Long) Trucool
OC-4454	Cooler, 7-1/4" X11" X3/4"" (13000 BTU) 11/32"" Hose (Barb Long) Trucool
OC-4490	Cooler, 12" X 11" X 3/4"" (20000 BTU) 11/32"" Hose (Barb Long) Trucool
OC-4541	Cooler, 3-3/4" X11" X3/4 (9,000 BTU) 3/8 Hose (Barb Long) Trucool
OC-4542	Cooler, 5-1/2" X11" X3/4"" (12,000 BTU) 3/8"" Hose (Barb Long) Trucool
OC-4543	Cooler, 7-1/4" X11" X3/4"" (15,000 BTU) 3/8"" Hose (Barb Long) Trucool

Part #	Description
OC-4544	Cooler, 9-1/2" X11" X3/4"" (20,000 BTU) 3/8"" Hose (Barb Long) Trucool
OC-4588	Cooler, 5-3/4" X11" X1-1/2 (15000 BTU) 11/32 Hose (Barb Long) Trucool
OC-4589	Cooler, 8" X 11" X1-1/2 (21,800 BTU) 11/32 Hose (Barb Long) Trucool
OC-4590	Cooler, 11" X 11" X1-1/2 (25,000 BTU) 11/32 Hose (Barb Long) Trucool
OC-4598	Cooler, 4" X 4" Power Steering (Long) Trucool
OC-4707	Cooler, 8-1/4" x 11" x 3/4" (16,000 BTU) 5/16" Inverted Flare (Hex) Trucool
OC-4711	Cooler, 8-1/4" X11" X3/4 (16,000 BTU) 3/8 Inverted Flare (Hex) Trucool
OC-4739	Cooler, 8-1/2" x 22" x 1-1/4" (45,000 BTU) W/Cold Bypass (3/8" Inverted) Hex (Trucool)
OC-47391	Cooler, 8-1/2" X22" X1-1/4"" (45,000 BTU) W/O Cold Bypass (3/8" Inverted) Hex (Trucool)
OC-4920	Cooler, 4" X23" X3/4"" (22,000 BTU) W/Cold Bypass (3/8"" Barb) Trucool
OC-49201	Cooler 4" X23" 3/4"" (22,000 BTU) W/O Cold Bypass (3/8"" Barb) Trucool
OC-4921	Cooler 6" X23" X3/4"" (34,000 BTU) W/Cold Bypass (3/8"" Barb) Trucool
OC-49211	Cooler, 6" X23" X3/4 (34,000 BTU) W/O Cold By pass (3/8 Barb)
OC-512	Cooler, Medium Duty (Hi-Perf) Black (3/4" X7-1/2" X12-3/4"")
OC-514	Cooler, HD (Hi-Perf) Black (3/4" X 7-1/2" X 15-1/2") (Hayden)
OC-525	The Dawg, Cooling System, Hi-Perf (525 Model) By Hayden
OC-526	The Dawg, Cooling System, Rapid Cool (526 Model) By Hayden
OC-708-4739	Cold Weather Bypass (Remote Thermal Bypass)(3/8" Hose Barb) (Long Tru-Cool)
OC-778	Cooler, (12 15/16" x 8 7/8" x 1 3/4")(Fitting 7/8-14 Female) (Hayden)
OC-B7B	Cooler, 2 3/4" X11" X1 1/2"" (7,500 BTU) 1/2"" NPT (Trucool)
OC-H7B	Cooler, 11" X11" X1 1/2 (29,200 BTU) 1/2 NPT (Hi-Perf) Trucool
OC-L7B	Cooler, 5 3/4" X11" X1 1/2"" (15,000 BTU) 1/2"" NPT (Trucool)
OC-M7B	Cooler, 8" X11" X1 1/2"" (20,500 BTU) 1/2"" NPT (HD) Trucool

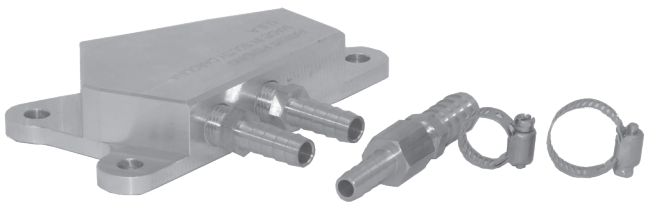

30998B ..... External Cooler Adapter, Acura Honda (Replaces The OEM)

© Whatever It Takes Transmission Parts, Inc.

Pressure Riser

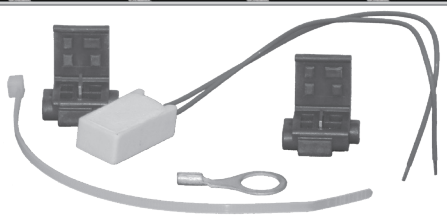

PR201..... Pressure Riser, 4L60E/4L80E Standard Duty
PR202..... Pressure Riser, 4L60E/4L80E/RE4/KM (Heavy Duty) Through 2005
PR204..... Pressure Riser, Standard Duty For E4OD (Gas) 1989-E93, AODE/4R70W/AXODE/AX4N/
..... RE4/KM Through 1997, Fits Heavy Duty 4L60E/4L80E Through 1997
PR205..... Pressure Riser, E4OD (Gas)(Heavy Duty) 1989-E93
PR206..... Pressure Riser, E4OD (Gas)(Heavy Duty) 1989-E93 / E4OD (Diesel)(Standard Duty)
..... 1989-93 / AXODE/AX4N (Heavy Duty) Through 1997
PR207..... Pressure Riser, E4OD (Diesel)(Heavy Duty) 1989-93 / AODE/4R70W (Heavy Duty) Thru 1997 /
..... AXODE/AX4N (Heavy Duty +) Thru 1997
PR209..... Pressure Riser, E4OD (All)(Standard Duty) L1993-98
PR210..... Pressure Riser, E4OD (All)(Heavy Duty) L1993-98
PR211..... Pressure Riser, E4OD (All)(Heavy Duty Plus) L1993-98
PR230..... Pressure Riser, 4L60E Driver Adjustable
PR231..... Pressure Riser, E4OD Driver Adjustable
PR232..... Pressure Riser, AODE Driver Adjustable
PR233..... Pressure Riser, AXODE/AX4N Driver Adjustable
PR235..... Pressure Riser, E4OD L1993-98 (Also Fits 4R100 Thru 2001)
PR260..... Master Pressure Riser Assortment (12 Total)(Contains 10 Different Pressure Riser With
..... 2 Each Of The 2 Most Popular)
PR261..... Pressure Riser Selector Box
PR262..... Pressure Riser Master Kit
PR280..... Pressure Riser, 4L80E/4L60E (GM Overdrive Lockout)(For Fleets With Various Drivers)
..... (Keeps Tranny Out Of HIgh Gear)
PR281..... Pressure Riser, E4OD/AODE/4R70W (Ford Overdrive Lockout)(For Fleets With Various
..... Drivers)(Keeps Tranny Out Of High Gear)
PR282..... Pressure Riser, A500/A618 (RH & RE)(Chrysler Overdrive Lockout)(For Fleets With Various
..... Drivers)(Keeps Tranny Out Of HIgh Gear) Thru 1998

Silcone & Gasket Maker



M469AB.....Aerosol (Gasket Maker) RTV Silicon
.....(7.25 oz)(Red) High Temperature (Cheese Whiz)
M469B .....Silicone, Tube (3 oz) (Black)
DM469BA .....Silicone Ultra Sealant (Ford)(2.4 oz)
M469BB.....Aerosol (Gasket Maker) RTV Silicone
.....(7.25 oz)(Black)(Sensor Safe)(Cheese Whiz)
M469BLA.....Silicone, (Black)(11 oz Tube) (Dynatex)
M469BLU.....Silicone, (Blue)(11 oz Tube) (Dynatex)
M469BLU-3 .....Silicone, (Blue)(3 oz Tube) (Dynatex)
M469CGE.....Loctite 518, Gasket Eliminator (Part #51831)
.....(1.69 oz Tube)(Used Like A Silicone Gasket Maker)
M469R.....Silicone, Red (11 oz Tube)(Dynatex)
M469RE.....Silicone, Red (3 oz Tube)(Dynatex)
M469RF.....Rapid Fix, Instant Adhesive & Welding Powder
.....(Dual Adhesive)(Bonds Metals,Rubber, Glass &
.....Most Plastics)(Toledo Driveline)
M465W .....Dynatex, Gasket Remover Spray

© Whatever It Takes Transmission Parts. Inc.

Electrical

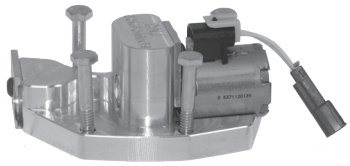

A12432BK .... Conversion Kit, A500/A518/A618/48RE Governor Solenoid
..... (Converts The Governor Solenoid To Use The GM #34435B
..... Solenoid)(Contains: Solenoid With Adapter Harness, Manifold
..... Block, 4 Bolts & Gasket) 1994-Up

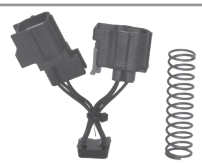

S72445PK .... Wire Harnes Kit, 45RFE/545RFE/65RFE/66RFE/68RFE
..... Line Pressure Booster (Sonnax)(Goes Between Line Pressure
..... Transducer & Wire Harness)(Contains: Wire Harness With
..... Connectors & Pressure Regulator Spring)



5L2Z-9E731B .. Speed Sensor, Rear Axle Housng (Output Speed) 2002-Up
..... (Aviator, Explorer & Mountaineer)



86445EBK .... Repair Kit, AXODE/AX4S/AX4N/4R70W External Wire
..... Harness (Rostra)



86445ECK .... Repair Kit, AXODE/AX4N Speed Sensor Wire Harness
..... Connector (Fits 36438, 36774D, 86774B, 86774C, 86774H,
..... F85Z-2L373AB)



8F85Z-2L373AB ..... Speed Sensor, Rear Axle Housing (Output Speed)
..... (Aerostar 1990-97)(Bronco II 1990)(E150/250/350
..... 1990-06)(F150 1990-03)(Expedition/Mountaineer
..... 1991-01)(F250 1990-99)(F250-F450 1999-04)
..... (Excursion 2000-09)(Ranger 1990-03)(Sport Trac
..... 2000-01)(Expedition 1997-02)



NF-27..... EMI Filter, A518/48RE (Wires Into TPS Signal)(Diesel Trucks)
..... (Fixes TCC Cycling)(ATSG)

Paint & Markers



M471AY .....Industrial Paint Marker (Yellow)(Heavy Duty)
.....(High Capacity Barrel)(Marks on Metal,
.....Rubber, Masonry, Some Plastic, Glass)
.....(Temperature Range: -20 to 150 Degrees F)
.....(California Compliant)
M471ABLU .....Industrial Paint Marker (Blue)(Heavy Duty
.....High Capacity Barrel)(Marks On Metal,
.....Rubber, Masonry, Glass & Some Plastic)
M471Y .....Keep-Track Marker (Yellow)
M473B .....Spray Paint, Universal Black
M473CA.....Spray Paint, Alumi Blast
M473CB.....Spray Paint, Cast Blast
M473CHR.....Spray Paint, Chrome Aluminum

© Whatever It Takes Transmission Parts, Inc.

Cleaners



M470-35 .....Transmission Cleaning Compound (35 lb)
.....(In a Square WIT Pail)
M470-HC .....Cleaner, Hand (All Natural)(12 oz Bottle)
M470-HW .....Wipes, Hand Cleaner (Pre-Moistened)(72 Count)
M470-32OZ .....Cleaner, RV & Boat (Crown) General Purpose Cleaner
M470-450 .....Transmission Cleaning Compound (450 lb)
.....(Transbrite 7000 Powder)
M470-50 .....Transmission Cleaning Compound (50 lb)
.....(Transbrite Cleaning Compound)
M470-50-TEST.....Test Kit, For Transbrite 7000 & 9000 Powder
M470-55GAL .....Transmission Cleaning Compound (55 Gallon
.....Liquid)(Transbrite 9000 Liguid)
M470-5GAL .....Transmission Cleaning Compound (5 Gallon
.....Liquid)(Transbrite 9000 Liquid)
M470U-55GAL.....Transmission Cleaning Compound (55 Gallon
.....Liquid)(Transbrite Ultrasonic)
M470U-5GAL.....Transmission Cleaning Compound (5 Gallon
.....Liquid)(Transbrite Ultrasonic)

Gloves

M475MB .....Gloves, (Medium) (5 Mil Thick) Nitrile
.....Disposable, Powder Free(100 Gloves)
M475MC.....Gloves, (Large) (5 Mil Thick) Nitrile
.....Disposable, Powder Free (100 Gloves)
M475MD.....Gloves, (Extra Large) (5 Mil Thick) Nitrile
.....Disposable, Powder Free (100 Gloves)
M475MH.....Gloves(Medium)(8 Mil Thick, Nitrile Disposable,
.....Powder Free, Tube Of 50 Gloves)
M475MJ.....Gloves, (Large) (8 Mil Thick) Nitrile
.....Disposable, Powder Free (50 Gloves)
M475MK.....Gloves, (Extra Large) (8 Mil Thick) Nitrile
.....Disposable, Powder Free (50 Gloves)
T-HYARC-GB.....Hyarc Glove Bag (W/Magnet)(For Hybrid
.....Vehicle Technicians)
T-HYARC-LG.....Linesman Leather Gloves (Size 11)(For
.....Hybrid Vehicle Technicians)
T-HYARC-RG .....Electrical Rubber Gloves (Size 11)(For Hybrid
.....Vehicle Technicians)
T-HYARC-SB.....Hyarc Storage Bag (Gear Bag)(For Hybrid
.....Vehicle Technicians)
T-HYARC-SG.....Safety Goggles (Magid)(For Hybrid Vehicle
.....Technicians)
T-HYARCKIT9H.....Hybric Vehicle Protection Kit (For Hybrid
.....Vehicle Technicians)
T-ESD-STP.....ESD Protection Wrist Strap (BlueReach)



Light Bulbs



M472-50 .....Light Bulb, Rough Service (50 Watt)
.....(24 Bulbs Per Case)
M472-75 .....Light Bulb, Rough Service (75 Watt)
.....(2 Bulbs Per Case)
M472-100 .....Light Bulb, Rough Service (100 Watt)
.....(30 Bulbs Per Case)

© Whatever It Takes Transmission Parts, Inc.

Thread Locker & Repair

M465LE .....Smart Blend (Epoxy)(Anti-Slip)
M469LG.....Smart Blend Threadlocker (Red)(1.7 oz)
.....High Strength
208-104 .....Coarse Thread Insert (1/4-20) Perma-Coil
208-105 .....Coarse Thread Insert (5/16-18) Perma-Coil
208-106 .....Coarse Thread Insert (3/8-16) Perma-Coil
208-107 .....Coarse Threar Insert (7/16-14) Perma-Coil
208-108 .....Coarse Thread Insert (1/2-13) Perma-Coil
1182-104.....Perma-Coil Installation Tool (1/4-20)
1182-105.....Perma-Coil Installation Tool (5/16-18)
1182-106.....Perma-Coil Installation Tool (3/8-16)
1182-107.....Perma-Coil Installation Tool (7/16-14)
1182-108.....Perma-Coil Installation Tool (1/2-13)
1208-104 .....Coarse Thread Repair Kit (1/4-20) Perma-Coil
1208-105 .....Coarse Thread Repair Kit (5/16-18) Perma-Coil
1208-106 .....Coarse Thread Repair Kit (3/8-16) Perma-Coil
1208-107 .....Coarse Thread Repair Kit (7/16-14) Perma-Coil
1208-108 .....Coarse Thread Repair Kit (1/2-13) Perma-Coil
206-306 .....Metric Thread Insert (M6 x 1.0) Perma-Coil
206-308 .....Metric Thread Insert (M8 x 1.25) Perma-Coil
206-310 .....Metric Thread Insert (M10 x 1.5) Perma-Coil
3221-M10F .....Metric Thread Repair Kit (M10 x 1.25) Perma-Coil
3221-M12C.....Metric Thread Repair Kit (M12 x 1.75) Perma-Coil
3221-M12F .....Metric Thread Repair Kit (M12 x 1.25) Perma-Coil





Assembly Lubricants



M465DT.....Dynatex, (Blue) Assembly Lube
M465S .....Dynatex, Silicone Lubricant (16 oz)(Aerosol)
M465TG.....Lubegard, (Green) Assembly Goo (16 oz)(Tub)
M465TH.....Lubegard, Assembly Aid (8 oz)(For Seals & Pistons)
M465TJ.....Transjel, (Red) Assembly Lube (Sealed Power)
M465TJG.....Transjel, (Gold) Assembly Lube (Sealed Power)
SM465TJS.....Sonnax, Lube Stick (Slippery Stick O-Ring Lube)
M465TP .....Smart Blend, (Blue) Trans-Prep Lube
M465TPS.....Smart Blend, (White) Synthetic Assembly Lube
M465S .....Dynatex Silicone Lubricant (16 oz)(Aerosol)
M465VS.....Lubegard Valve & Assembly (16 oz Pump Spray)(For Sticking Valves)
M465VSG.....Lubegard Valve & Assembly (1 Gallon)(For Sticking Valves)
SM465TJS.....Lube Stick (Slippery Stick O-Ring Lube)(Sonnax)

© Whatever It Takes Transmission Parts, Inc.

Transmission Fluids









M465ATF-1D ..... Transmission Fluid, (Dexron III/Mercon)(1 Quart)(Multi-Guard)
M465ATF-4D ..... Transmission Fluid, (Dexron III/Mercon)(1 Gallon)(Multi-Guard)
M465ATF-1D6 ..... Transmission Fluid, (Dexron 6)(1 Quart)(Multi-Guard)
M465ATF-4D6 ..... Transmission Fluid, (Dexron 6)(1 Gallon)(Multi-Guard)
M465ATF-1H ..... Transmission Fluid, (Type H)(Engineered For Honda Z1 Specs)
..... (1 Quart)
M465ATF-1LCVT..... Transmission Fluid, CVT Fluid (1 Quart)(Lubegard)(For Use In Any
..... Belt Type CVT Transmission)
M465ATF-4LCVT..... ATF (Lubegard) CVT Fluid (1.25 Gallon)(For Use In Any Belt Type
..... CVT Transmission)
M465ATF-1LS ..... Transmission Fluid, (Synthetic)(Lubegard) Complete (32 oz)
M465ATF-22LS ..... Transmission Fluid, (Synthetic)(Lubegard) Complete (6 Gallon)
M465ATF-1M..... Transmission Fluid, (Mercon V)(Motorcraft)(1 Quart)
M465ATF-1PS..... Transmission Fluid, (Pentosin ATF-1)(Synthetic)(1 Liter)(European)
..... (For All ZF Transmissions, Volkswagen/Audi 1996-Up, BMW (5 Speed)
..... 1995-Up, And Nag-1 & Nag-2)
M465ATF-1S ..... Transmission Fluid, (Synthetic)(Valvoline Max Life)(1 Quart)
M465ATF-20S ..... Transmission Fluid, (Synthetic)(5 Gallon)(Valvoline Max-Life)
M465ATF-55S ..... Transmission Fluid, (Synthetic)(55 Gallon)(Valvoline Max-Life)
M465ATF-4D ..... Transmission Fluid, (Dexron III/Mercon)(1 Gallon)(Multi-Guard)
M465ATF-20D ..... Transmission Fluid, (Dexron III/Mercon)(5 Gallon)(Multi-Guard)
M465ATF-55D ..... Transmission Fluid, (Dexron III/Mercon)(55 Gallon)(Multi-Guard)
M465DCT ..... Transmission Fluid, Dual Clutch (Multi-Vehicle)
M465G..... Lubegard, Gear Oil Supplement (For Manual Transmissions &
..... Differentials)(8 oz)
DM465G ..... AC/Delco Manual Transmission Fluid (Quart)(Synthetic) 75-90W)
M465GB ..... Smart Blend, Gear Oil Supplement (8 oz)
M465SBS ..... Smart Blend, SUV/Truck Transmission Fluid Supplement (16 oz)
..... (Synthetic)
M465SCVT..... Transmission Fluid, CVT (Smart Blend)(For All CVT Units)(1 Quart)
M465CVT-4 ..... Transmission Fluid, CVT (Smart Blend)(For All CVT Units)(1 Gallon)
M465ST..... Transmission Fluid, Titanium (Smart Blend)(Universal For All Except Ford
..... Type F)
M465ZF5-1L..... Transmission Fluid, ZF (Lifeguard Fluid 5)(1 Liter)(For 4HP20 &
..... All 5 Speed With Green Tag On Transmission)
M465ZF5-6L..... Transmission Fluid, ZF (Lifeguard Fluid 5)(Case Of 6 1 Liter Bottles)
..... (For 4HP20 & All 5 Speeds With Green Tag On Transmission)
M465ZF6-1L..... Transmission Fluid, ZF (Lifeguard Fluid 6)(1 Liter)(For All 6 Speeds
..... Except 6HP26A61 (Audi With W12 Engine)(6HP19A & Audi Q7
..... With 6HP19X)
M465ZF6A-20L..... Transmission Fluid, ZF (Lifeguard Fluid 6)(20 Liter)(For 6 Speed
..... ZF6HP26A61 Audi With W12 Engine)
M465ZF8-1L..... Transmission Fluid, ZF (Lifeguard Fluid 8)(1 Liter)
M465ZF8-20L..... Transmission Fluid, ZF (Lifeguard Fluid 8)(20 Liter)
M465ZFD-10L ..... ZF Differential and Transfer Case Oil (Burmah SAF AG4)(10 Liter)
M465ZFS-20L..... Transmission Fluid, ZF Shell LA 2634 (20 Liter)(ZF # S671090149)
..... (5HP30 W/Black Tag)(Units W/Tag #s 1055-000-007/010/011/015/029/030)

© Whatever It Takes Transmission Parts, Inc.

Lubegard Products



T-96000 .....Lubegard Electrolysis Tool
M465B .....Lubegard (Black) ATF Supplement (10 oz)(Honda/Chrysler)
M465BTR .....Lubegard BTR ATF Fluid Conversion (Special Order Only)
M465C .....Lubegard “Kool-It” Supreme Coolant Treatment (16 oz)
M465CF .....Lubegard “Kool-It” Radiator Flush (16 oz)
M465CF-C .....Lubegard “Kool-It” Radiator Flush & Treatment (Dual Pack)
M465CH .....Lubegard “Kool-It” Evaporator & Heater Foam Cleaner (6o z)
M465D .....Lubegard Limited Slip Supplement
M465E .....Lubegard Engine Oil Supplement (10 oz)(Bio/Tech Engine Oil Protectant)
M465EA.....Lubegard Engine Oil Supplement (15 oz)(Bio/Tech Engine Oil Protectant)
M465EC.....Lubegard 2 Cycle Engine Oil (8 oz)
M465EF .....Lubegard Engine Oil Flush (15 oz)
M465EF-EA .....Lubegard Engine Oil Flush & 15 oz Supplement (Dual Pack)
M465FSB.....Lubegard Fuel System Booster (16 oz)(Complete Fuel System Cleaner & Stabilizer (For Use
.....In Gasoline & Diesel Engines)
M465FTK.....Lubegard Fuel System “Pro II” Cleaning Kit (2 Can Kit)
M465G.....Lubegard Gear Oil Supplement (For Manual Transmissions & Differential)(8 oz)
M465HA.....Lubegard Shudder Fix (2 oz)
M465KD.....Lubegard Kooler Kleen Flush (13.25 oz)(Aerosol)
M465KDW .....Lubegard Kooler Kleen Flush (18 oz)(Water Based)
M465L.....Lubegard (Red) ATF Supplement (10 oz)
M465L-32 .....Lubegard (Red) ATF Supplement (32 oz)
M465LF .....Lubegard Flush (Use With Or Without Flush Machine)
M465LF-B.....Lubegard Flush & Black ATF Supplement (Dual Pack)
M465LF-L .....Lubegard Flush & Red ATF Supplement (Dual Pack)
M465LF-LP.....Lubegard Flush & Platinum ATF Supplement (Dual Pack)
M465LF-LV .....Lubegard Flush & Green ATF Supplement (Dual Pack)
M465LL.....Lubegard All Purpose (Lube N Loosen)(4 oz)
M465LP .....Lubegard “Platinum” (Universal Except Ford Type “F”)
M465LP-32 .....Lubegard “Platinum” (Universal Except Ford Type “F”)(32 oz)
M465LS .....Lubegard “Seal E Zee” Spray (For Difficult Seals)(7 oz)(Use With T-19600)
M465LS-16 .....Lubegard “Seal E Zee” (Spray)(16 oz)(Use With T-19600)
M465LSX.....Lubegard “Seal E Zee Extreme” (Spray)(Use With M465LS & T-19600)(7 oz)
T-19600 .....Seal-E-Zee Cones, Application Cones (Lube Gard)(Use With M465LS & M465LS-16 & M465LSX
.....Or M465LS-LSX) (6 Assorted Sizes)
T-19540 .....Seal-E-Zee Cones, 5L40E (Lubegard)(Use With M465LS, M465LS-16 And M465LSX
.....Or M465LS-LSX)
M465LV .....Lubegard (Green) (Ford Mercon V)
M465PS.....Lubegard Power Steering Fluid Supplement (4 oz)
M465PS-10.....Lubegard Power Steering Fluid (10 oz)
M465PSF.....Lubegard Power Steering Flush 94 oz)
M465PSF-PS.....Lubegard Power Steering Flush & 4 oz Supplement (Dual Pack)
M465PSS-64 .....Lubegard Power Steering Protectant & 64 oz Fluid (Dual Pack)
M465TG.....Lubegard “Green” Assembly Goo (16 oz)(Tub)
M465TH.....Lubegard Assembly Aid (8 oz)(For Seals & Pistons)
M465VS.....Lubegard Valve & Asembly (16 oz Pump Spray)(For Sticking Valves)
M465VSG .....Lubegard Valve & Assembly (1 Gallon)(For Sticking Valves)
M465WC.....Lubegard Drilling & Tapping Fluid (Bio-Tap)(15 oz)
M465WC-1G.....Lubegard Cutting Fluid HD Water Emulsifiable (1 Gallon)(For Turning, Milling, Sawing & Tapping)

© Whatever It Takes Transmission Parts, Inc.

Smart Blend (Life Automotive) Products



M465DS.....Smart Blend, Limited Slip (Synthetic)(4 oz)
M465F18 .....Smart Blend Cooler Flush (18 oz)(Aerosol)
M465GB .....Smart Blend, Gear Oil Supplement (8 oz)
M465HB.....Smart Blend, Shudder Eliminator (2 oz)
M465J.....Smart Blend, Tru-Volt Cleaner (10 oz)(Aerosol)
M465PPS .....Smart Blend, Power Steering Protectant (4 oz)
M465SB.....Smart Blend, (Red) ATF Supplement (10 oz)
M465SBA.....Smart Blend, (Black) ATF Supplement (10 oz)(Honda/Chrysler)
M465SBD .....Smart Blend, (Gold)(Dexron III & Mercon To Dexron VI)
M465SBV .....Smart Blend, (Blue) ATF Supplement (Mercon V)
M465SCVT.....Smart Blend, CVT Transmission Fluid (For All CVT Units)(1 Quart)
M465CVT-4 .....Smart Blend, CVT Transmission Fluid (For All CVT Units)(1 Gallon)
M465ST.....Smart Blend, “Titanium” (Universal Except For Ford Type F)
M465TP.....Smart Blend, (Blue) Trans-Prep Lube
M465TPS.....Smart Blend, (White) Synthetic Assembly Lube
M468.....Life Strips, (1 Package of 10) Stick On Temperature Strips
M469LE .....Smart Blend, Epoxy (Anti-Slip)
M469LG.....Smart Blend, Threadlocker (Red)(1.7 oz) High Strength

Other Products



Brake Kleen.....Brake Parts Cleaner/Degreaser (Non-Chlorinated)(14 oz)
.....(#4 Flash Point)(Very Flammable)
Brake Kleen CC.....Brake Parts Cleaner/Degreaser (Non-Chlorinated)(14 oz)(Meets VOC
.....Regulations In All 50 States)
M465BB1.....Brand One, Synthetic HFM Supplement (10 oz Bottle)
M465F14B1.....Brand One Cooler Flush (14 oz Aerosol)
M465HAB1 .....Brand One Instant Shudder Stop (2 oz Tube)
M465J.....Smart Blend Tru Volt Cleaner (10 oz)(Aerosol)
M465JP .....Transjel Bulkhead/Connector Protector (1 oz Tube)
M465LPB1.....Brand One Synthetic Universal ATF Protectant (10 oz Bottle)
M465MT8 .....Muscle Metal Treatment (MT-10)(8 oz)
M468.....Life Strips (1 Package of 10) Stick On Temperature Strips
M469RF.....Rapid Fix, Instant Adhesive & Welding Powder (Dual Adhesive)
.....(Bonds Metals,Rubber, Glass & Most Plastics)

© Whatever It Takes Transmission Parts, Inc.

1-800-940-0197

Transfer Case Gaskets



M301317A .... Gasket, 350/350C Extension Housing
..... (Adapter) To NP203 Transfer Case
..... 1973-80

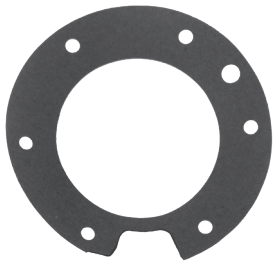

M301317B .... Gasket, NP203 Adapter (6 Bolt &
..... 1 Dowel Hole)(Also Fits NP208/
..... BW4481/BW4482 Ford/Dodge/Jeep)
..... (NP205/NP241 Dodge)

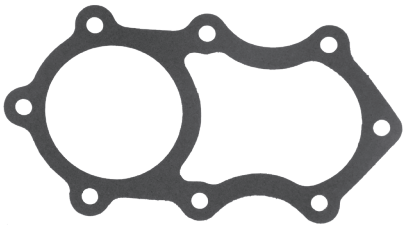

M302317A .... Gasket, 350/350C Extension Housing
..... (Adapter) To NP205 Transfer Case
..... 1969-86 (Also Fits 400)

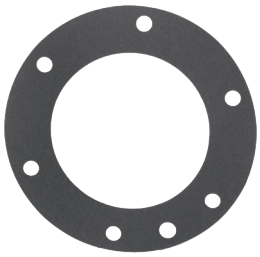

M304317A .... Gasket, NP208 (Ford/Dodge/Jeep)
..... Extension Housing (Adapter)(6 Bolt
..... & 1 Dowel Hole)(Also Fits 1345/1350/
..... 1354/1356/4406/4407/4416/4444/
..... NP271/NP273 Ford)

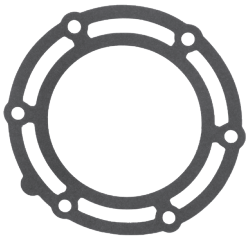

M304317B .... Gasket, 3NP208 (Chevy/Dodge)
..... Extension Housing Adapter (6 Bolt &
..... No Dowel Hole)(6 Slots)(Synchro Style)
..... (2nd Design)(Retro Fits Early)(Also Fits
..... NP119/129/144/149/231/241/242/246/
..... 247/249/261/273 & MP1225/MP3023)

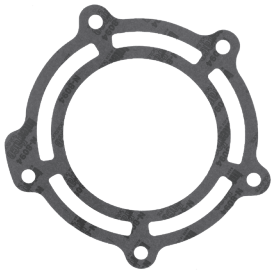

M308317..... Gasket, NP231/NP233 Adapter (5 Bolt)
..... (Also Fits NP126/136/207/226/236/
..... BW4493)(Fits 700/700R4/4L60E/A904/
..... A727/A500/A518 Transmissions)

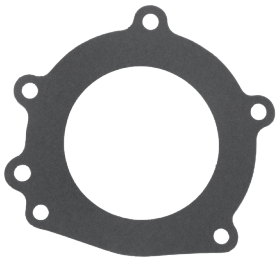

M353317A .... Gasket, 1345/1350/1354 Transfer Case
..... Adapter (Front)(5 Bolt)(Also Fits
..... 4404/4405 & Dana 28)

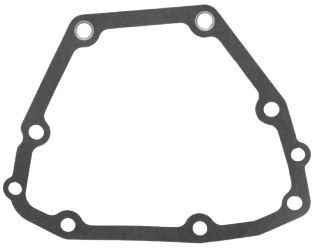

M372317A .... Gasket, BW4410/4411 Transfer Case
..... (Front)(7 Bolt) 2002-Up

© Whatever It Takes Transmission Parts, Inc.

Tools



Lip Seal Tool . WIT Lip Seal Installer Tool Black Handle



T-1260AC ..... Spanner Socket, 6R140 Output Nut
..... (Adapt-A-Case)



T-1550A..... Mortorq Bit, 4L60E, 2009-Up, 4L60E Bell
..... To Case Bolts Due To High Torque
..... Requirements And Difficulty In Removal
..... Of The Transmission Case To Converter
..... Housing Bolts Without Stripping The
..... Internal Torx, Bolt Head Is Being
..... Changed To New Mortorq Design

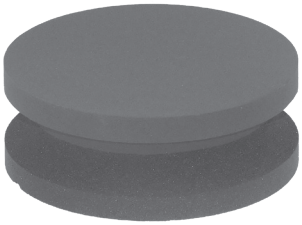

T-35289 ..... Bench Stone, Silicone Carbide (4”OD)
..... (1 Side Fine & 1 Side Coarse)(For
..... Smoothing Out High Spots On Cases,
..... VB & Etc.)

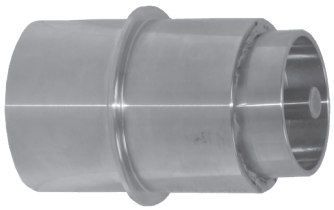

T-46624SAC ... 6F35/6F50/6T40/45/70 Teflon Ring
..... Installer/Resizer (Stainless Steel)
..... (Adapt-A-Case)

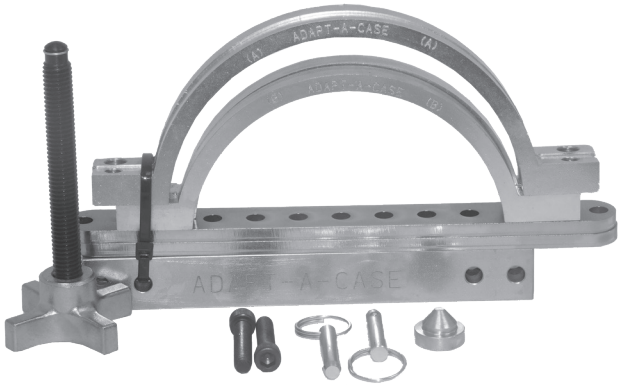

T-CVTAC ..... Tool Set, CVT Puller (Tool Set Comes Complete With All Pieces Needed To
..... Spread The Variators On Ford, Nissan, And Saturn CVT Transmissions)
..... (Adapt-A-Case)

© Whatever It Takes Transmission Parts. Inc.



T-K0110 ..... Honda/Acura Large Collar Puller Kit,
..... BCLA/BDKA/MDKA (Safely Removes
..... The Secondary Shaft Bearing And Oil
..... Collar Without Damaging The Bearing,
..... Collar Or Bell Housing) (Not For Use On
..... Small 4 Cylinder Civic/CR-V)



TJ-1 ..... Posi Lock TJ-1 Transmission Bearing Puller, 2 Jaw, 9 1/4" Reach, 2 3/4" to
..... 14 3/4" Spread Range
TJ-2 ..... Posi Lock TJ-2 Transmission Bearing Puller (3 Jaw) (Better For JF015E
..... RE0F11A Using Smaller Pulleys) (Jaw Reach is 6")(Spread Range Is 1/2" to
..... 7")

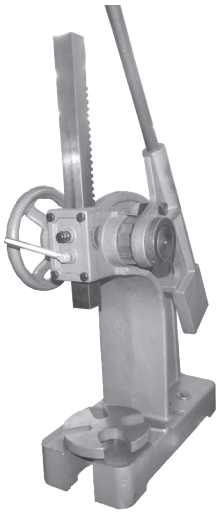

Arbor Press... Ratcheting Arbor Press With
..... 8" x 18" Base



CVT Press Plate.. Press Plate Used In Teardown &
..... Assembly Of CVT Transmission

© Whatever It Takes Transmission Parts, Inc.



T-16520A..... Pump Alignment Tool, 5R55N/S/W
..... (Also A4LD/4R44E/4R55E/5R55E)

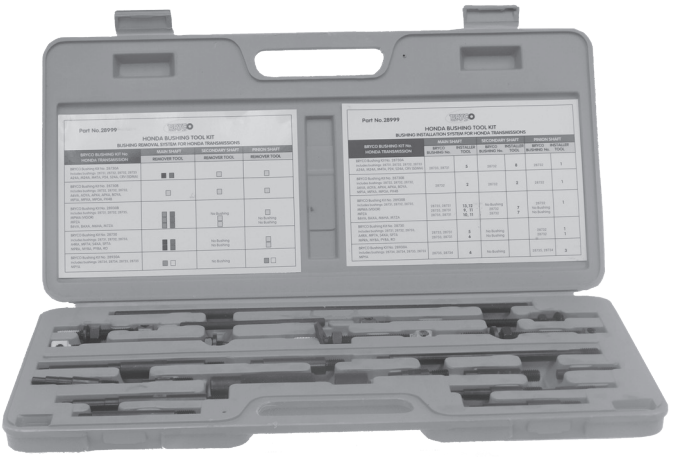

T-28999 ..... Tool Set, Acura/Honda(22 Pcs Bushing Remover & Installer) (This Set Works
..... For All Honda's W/Bushings)
T-28999ER ... Extractor Tool (Red Tip) Used in T-28999
T-28999EY.... Extractor Tool (Yellow Tip) Used In T-28999



T-6900AC ..... The Drum Buddy (Adapt-A-Case) Hand
..... Held Return Spring Compressor (Works
..... With 4T65E, AX4N, AXODE, A604, KM,
..... 5R110W, 4L60, 4L60E and Much More.
T-6900AC-Z..... Adapter (Adapt-A-Case) Used With
..... T-6900AC (Drum Buddy) Hand Held
..... Return Spring Compressor (Works With
..... ZF5HP30 And More)



T-82678B-WIT..... 42RLE 4X4 Output Shaft Remover Tool
.....(Sell D82895A Also)
82895A .....C-Clip, 42RLE Output Shaft Retainer (.135"Thick)
.....1.095"OD) 2003-Up

© Whatever It Takes Transmission Parts, Inc.



T-VACTEST ..... Vacuum Test Stand Kit (Sonnax)
..... (Vacuum Pump Not Included)
T-VACPUMP..... Vacuum Pump, 3.0 CFM
T-77754-VTP. ..... Vacuum Test Plate Kit,
..... 4L60E/4L65E/4L70E
..... (Contains: Plate, Seal, 10 Push
..... Pins, 2 Alignment Pins, 3 Bolts, 3
..... Washers, 3 Wing Nuts)(Use With
..... T-VACTEST-01K)
T-VACTEST-06. ..... Wet/Air Test Plate Pad (Use With
.... T-Swat-P1)(Sonnax)
..... (Contains;5 Pieces)
T-VACTEST-TIPS. ... Vacuum Test Tips (Replaces Worn
..... Or Lost Tips, Restoring Proper
..... Sealing (Use With T-VACTEST)
..... (Contains 6) (Sonnax)



T-6L80-PLIERS.. ..... Pliers, 6L45/6L50/6L80/6L90 Removes Center Support Snap Ring 2006-Up
..... (Also Fits 5L40E Removes Overdrive/Intermediate Housing Snap Ring 2000-Up)
..... (Also Fits AX4N/4F50N ZF6HP26/6R60/6R80/6R140)
T-6L80-PLIERS-1.. ..... Replacement Tips, For T-6L80-PLIERS



T-0177-A.....6' Work Bench W/Rear Drain Trough(12 Gauge)(ATEC)
T-0177-A-08.....8' Work Bench W/Rear Drain Trough(12 Gauge)(ATEC)
T-0177-W-6.....6' Portable Work Bench W/Drian Reservoir Tank(ATEC)
T-RB-100B.....6' Work Bench W/Rear Drain Trough (12 Gauge) Made In U.S.A.!!!!
T-RB-100B-10.....10' Work Bench W/Rear Drain Trough (12 Gauge) Made In U.S.A.
T-RB-100B-8.....8' Work Bech W/Rear Drain Trough (12 Gauge) Made In U.S.A.!!!
T-RB-102 .....In-Line Rebuilding Station (2 Work Benches & Tank)36" Wide, 34" High
.....(J-Mar)
T-RB-102T .....36"X34"X34" 55 GAL RINSE TANK

© Whatever It Takes Transmission Parts, Inc.

REQUEST THE BEST!
Order Genuine TeckPak-Fitzall

"GET IT YOUR WAY"

Master Kits

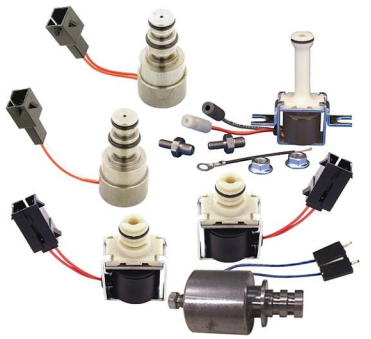

MS 4L60E
Fits '93-'95 4L60E
To include Harness Order
MS 4L60E-H

MS 4L60E '96
Fits '96-'02 4L60E
To include Harness Order
MS 4L60E '96-H

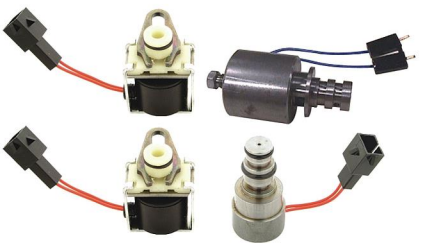

MS 4L80E
Fits '93-'03 4L80E
To include Harness Order
MS 4L80E-H



MS 4T60E
Fits '92-'98 4T60E
To include Harness Order
MS 4T60E-H



MS A4LD
Fits '87-'95 A4LD
To include Harness Order
MS A4LD-H

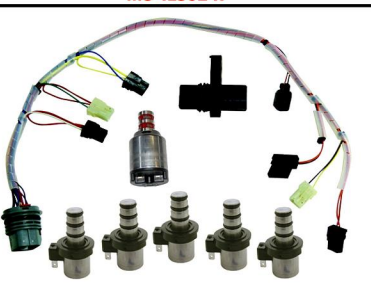

MS-KM-F4A41-05-H
Fits '05-up F4A41/42/51, F4A4B Four Speed with VFS
Includes the TOT Sensor



MS-KM-F5A51-05-H
Fits '05-up F5A51, A5HF1 Five Speed with VFS
Includes the TOT Sensor

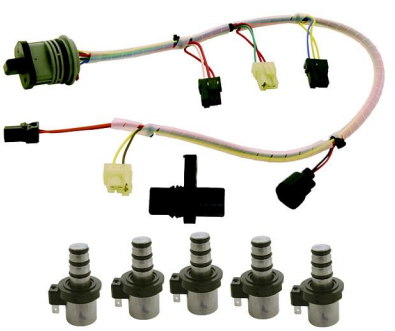

MS-KM-40/05-H
Fits '96-'04 F4A41/42/51 Four Speed
Includes the TOT Sensor

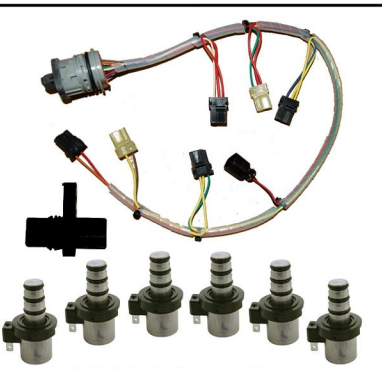

MS-KM-40/50-01-H
Fits '01-'04 F5A51 Five Speed
Includes the TOT Sensor



MS-KM-A4AF3
Fits '96-'11 A4AF3, A4BF2
Six Solenoid Valve Body



MS-ZFHP22
Fits ZFHP22/24 '84-up HP22 valve body
5 solenoid valve body only!!!



MS-A4CF1/2-H
Fits '06 up A4CF1/2
TOT Sensor built into Harness

All Genuine OEM Parts!

Toll Free: 1.800.527.2544 • www.teckpak-fitzall.com

REQUEST THE BEST!
Order Genuine TeckPak-Fitzall

fitzall™ By: TeckPak USA

Solenoids



K77929U
GM RWD MULTI-FIT LOCK-UP
Fits '81-'89 200-4R, '82-'92 700-R4, '93-up 4L60E
(20-40 Ohms)



K84856U
GM FWD MULTI-FIT LOCK-UP
Fits '82-'95 125C, '80-'97 200C, '81-'85 325-4L, '84-'92 440-T4
(20-40 Ohms)



34605U
GM EPC PRESSURE REGULATOR
Fits '90-'02 4L30E, '93-'02 4L60E, '93-'03 4L80E
(3.5 - 4.66 Ohms)

K34326U
GM RWD PWM / TCC
Fits '93-'06 TCC 4L60E, '93-'95 PWM 4L60E '91-'06 4L80E
(9-14 Ohms)



K77926
4L60E ON/OFF 3-2 DOWNSHIFT
Fits '96-'06 PWM 4L60E,
(20-31 Ohms)



K34825U
4L80E SHIFT SOLENOID
Fits '91-'06 4L80E
(20-40 Ohms)



K84825U
GM MULTI-FIT SHIFT AND LOCK-UP
Fits '93-'06 SHIFT 4L60E, '93-'99 SHIFT and TCC 4T60E
(20-40 Ohms)



K84858
4T60E PWM
Fits '93-'99 4T60E
(9-14 Ohms)



K56836
A4LD LOCK-UP
Fits '85-'95 A4LD
(26-40 Ohms)



K56836A-B
A4LD SHIFT
Fits '87-'95 A4LD
(26-40 Ohms)

76918
AODE MCCC
Fits '92-Early '95 AODE
(1-3 Ohms) Black Plug



76921
AODE / 4R70W MCCC
Fits '95-'97 AODE, 4R70W
(10-16 Ohms), White Plug



76919
AODE / 4R70W SHIFT PACK
Fits '92-'97 AODE, '95-'97 4R70W
(20-40 Ohms) per solenoid



96951U
AXOD / AXODE LOCK-UP
Fits '86-'90 AXOD, '91 Only Taurus w/AXODE
(21-36 Ohms)

96952
AXODE / AX4S / AX4N Early MCCC
Fits '91-'94 AXODE, '93-'97 AX4S, '95-'96 AX4N
(.98-1.6 Ohms) Black Plug

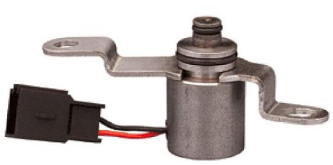

96954
AX4S / AX4N MCCC
Fits '98-'04 AX4S, '97-'07 AX4N
(13-24 Ohms) White Plug

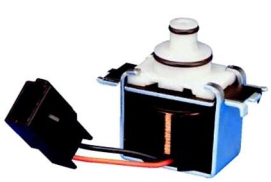

96953U
AXODE / AX4S / AX4N SHIFT
Fits '91-'94 AXODE, '95-'04 AX4S, '95-'07 AX4N
(15-25 Ohms)



56841U
4R44 SHIFT / COAST
Fits '95-up 4R44E, 4R55E, 5R55E
(22-48 Ohms)

Visit our website@www.teckpak-fitzall.com for updated product information & instructions

REQUEST THE BEST!
Order Genuine TeckPak-Fitzall

Solenoids & PRNDL



K41954
LATE KM SOLENOID
Fits '98-up F4A41/42/4B/51, A5HF1, R4A51, R5A51, V4A51, V5A51, W4A42
All positions except VFS position in '05-up units
(2.6-3.4 Ohms)
Genuine OEM Part 46313-39051



T41435A
LATE KM VFS SOLENOID
Fits '05 up F4A41/42/4B/51, F5A51, A5HF1/GF1
(4.0-4.7 Ohms)
Genuine OEM Part 46313-3A050



T131428A
VFS SOLENOID
Fits '06 up A4CF1 / A4CF2
(3.3-3.7 Ohms)
Genuine OEM Part 46313-23010

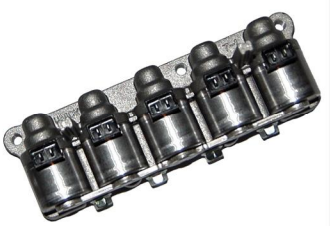

T131420A
SOLENOID 5 PACK
Fits '06-up A4CF1 / A4CF2
(3.0-3.4 Ohms)
Genuine OEM Part 46313-23000



T211421A
HYUNDAI-KIA (SS-A, SS-B) SOLENOID
Fits '09 -up A6GF / A6MF / A6LF
Genuine OEM Part 46313-3B030



T211428A
HYUNDAI-KIA (LINE PRESSURE) SOLENOID
Fits '09 -up A6GF / A6MF / A6LF
Genuine OEM Part 46313-3B600



T211425A
HYUNDAI-KIA (TCC, 2-6) SOLENOID
Fits '09 -up A6MF / A6LF
Genuine OEM Part 46313-3B675



T211427A
HYUNDAI-KIA (3-5-R, UD, OD) SOLENOID
Fits '09 -'13 A6GF / A6MF / A6LF
Genuine OEM Part 46313-3B661



T211450C
HYUNDAI-KIA (2-6) SOLENOID
Fits '09 -'13 A6GF
Genuine OEM Part 46313-3B075



T211425C
HYUNDAI-KIA (TCC) SOLENOID
Fits '09 -up A6GF / A6MF (Plastic Oil Pan)
Genuine OEM Part 46313-3B073



T211425B
HYUNDAI-KIA (TCC) SOLENOID
Fits '09 -up A6GF / A6MF (Steel Pan) & all A6LF
Genuine OEM Part 46313-3B673



T211427AA
HYUNDAI-KIA (3-5-R, UD, OD) SOLENOID
Fits '14 - up A6GF / A6MF / A6LF
Genuine OEM Part 46313-3B762



T211425CA
HYUNDAI-KIA (TCC, 2-6) SOLENOID
Fits '14 - up A6GF / A6MF / A6LF
Genuine OEM Part 46313-3B170



T211425AA
HYUNDAI-KIA (TCC, 2-6) SOLENOID
Fits '14 -up A6GF / A6MF / A6LF
Genuine OEM Part 46313-3B770



T211450CA
HYUNDAI-KIA (3-5-R, UD, OD) SOLENOID
Fits '14 -up A6GF / A6MF / A6LF
Genuine OEM Part 46313-3B160

REQUEST THE BEST!
Order Genuine TeckPak-Fitzall

fitzall™ By: TeckPak USA

Harnesses & Sensors



T211410A
HYUNDAI-KIA INHIBITOR SWITCH
Fits '09-'13 A6GF/A6MF/A6LF
Also known as PRNDL or Neutral Safety Switch
Genuine OEM Part 42700-3B000



T211410B
HYUNDAI-KIA INHIBITOR SWITCH
Fits '09-'13 A6GF/A6MF/A6LF
Also known as PRNDL or Neutral Safety Switch
Genuine OEM Part 42700-26700



K42954 SW
KM INHIBITOR SWITCH
Fits '98-'12 F4A41/42/51, R4A51, V4A51, W4A42
Also known as PRNDL or Neutral Safety Switch
Genuine OEM Part 42700-39050



T42410L
KM INHIBITOR SWITCH
Fits '01-'11 A4AF3 / A4BF1 / A4BF2
Also known as PRNDL or Neutral Safety Switch
Genuine OEM Part 45956-28010



K77929H
GM 4L60E INTERNAL WIRING HARNESS
Fits '93-'02 4L60E
(13 Pin Connector)

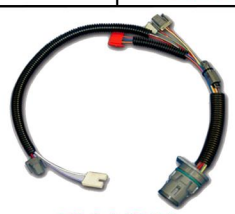

T34446AA
GM 4L80E INTERNAL WIRING HARNESS
Fits '94-'04 4L80E
(11 Pin Connector)



56837B
FORD A4LD INTERNAL WIRING HARNESS
Fits '87-'95 A4LD



T84446EC
GM 4T60E INTERNAL WIRING HARNESS
Fits '93-'99 4T60E
(7 Pin Connector)



T84446G
GM 4T65E INTERNAL WIRING HARNESS
Fits '96-'02 4T65E
(14 Pin Connector)



K41954HE
KM INTERNAL WIRING HARNESS
Fits '96-'04 F4A41/42/51 (4 - Speeds)
Genuine OEM Part 46307-39055

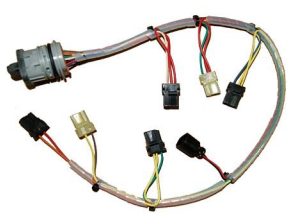

K41954HL
KM INTERNAL WIRING HARNESS
Fits '00-'04 F5A51 (5 - Speeds)
Genuine OEM Part 46308-39550



T131444A
KM INTERNAL CASE CONNECTOR
Fits '06 up A4CF1 / A4CF2
Genuine OEM Part 46307-23010



T131446A
KM INTERNAL WIRING HARNESS
Fits '06 up A4CF1 / A4CF2
Genuine OEM Part 46308-23000

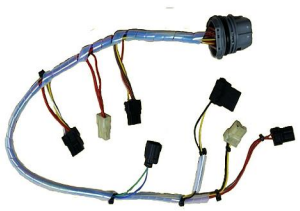

T41446AC
KM INTERNAL WIRING HARNESS
Fits '05 up F4A41/42/51, F4A4B (4 - Speeds)
Genuine OEM Part 46308-3A050

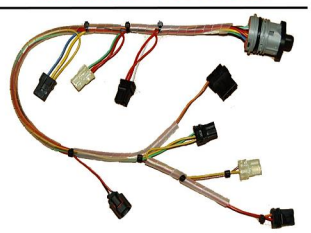

T41446CA
KM INTERNAL WIRING HARNESS
Fits '05 up F5A51, A5HF1 (5 - Speeds)
Genuine OEM Part 46308-3A550



T211446A
HYUNDAI-KIA INTERNAL WIRING HARNESS
Fits A6GF / A6MF / A6LF
(Black Connector End)
Genuine OEM Part 46307-3B650



T211446B
HYUNDAI-KIA INTERNAL WIRING HARNESS
Fits A6GF / A6MF / A6LF
(Gray Connector End)
Genuine OEM Part 46307-3B050



T211436AA
HYUNDAI-KIA SPEED SENSOR
Fits A6GF / A6MF / A6LF
(Blue Output)
Genuine OEM Part 42620-3B600



T211436AB
HYUNDAI-KIA SPEED SENSOR
Fits A6GF / A6MF / A6LF
(Natural Output)
Genuine OEM Part 42620-3B610

Visit our website@www.teckpak-fitzall.com for updated product information & instructions

REQUEST THE BEST!
Order Genuine TeckPak-Fitzall

Sensors



T211436AC
HYUNDAI-KIA SPEED SENSOR
Fits A6GF / A6MF / A6LF
(Gray Output)
Genuine OEM Part 42620-3B620



T211436B
HYUNDAI-KIA SPEED SENSOR
Fits A6GF / A6MF / A6LF
(Black Output)
Genuine OEM Part 42620-3B100



T211436BA
HYUNDAI-KIA SPEED SENSOR
Fits A6GF / A6MF / A6LF
(Green Output)
Genuine OEM Part 42620-3B110



T211436BB
HYUNDAI-KIA SPEED SENSOR
Fits A6GF / A6MF / A6LF
(Green w/Black Output)
Genuine OEM Part 42620-3B310



T42436G
EARLY KM PULSE GENERATOR
Fits 92-98 F4A23, KM-178
Genuine OEM Part 45955-38061



T42436LB
EARLY KM PULSE GENERATOR
Fits 96-02 A4AF1/F2, A4BF1/F2, F4A32
Genuine OEM Part 45955-22701



T42436M
EARLY KM PULSE GENERATOR
Fits 95-98 F4A33, W4A33
Genuine OEM Part 45955-38061



T42436P
EARLY KM PULSE GENERATOR
Fits 90-98 F4A21/22, KM-175/176/177
Genuine OEM Part 45955-37015



T41438
LATE KM INPUT PULSE GENERATOR
Fits 98-08 F4A41/42/51, F5A51, V4A51, W4A42
Genuine OEM Part 42620-39200



T41436
LATE KM OUTPUT PULSE GENERATOR
Fits 98-08 F4A41/42/51, F5A51, V4A51, W4A42
Genuine OEM Part 42621-39200



T51436A
KM PULSE GENERATOR
Fits 07 up A4AF3
Genuine OEM Part 45955-22746



42437L
KM TEMPERATURE SENSOR
Fits 93-11 A4AF1/F2, A4BF2/3
and F4A32
Genuine OEM Part 46386-22610



42437J
KM TEMPERATURE SENSOR
Fits 85-98 F4A21/22, KM-175/176
Genuine OEM Part 46386-34530



42437M
KM TEMPERATURE SENSOR
Fits 85-98 F4A33, W4A33
Genuine OEM Part 46386-38011



41437A
KM TEMPERATURE SENSOR
Fits '96-'04 F4A41/42/51,
and '00-up F5A51
Genuine OEM Part 46386-39050



T211437A
HYUNDAI-KIA TEMPERATURE SENSOR
Fits A6GF / A6MF / A6LF
Genuine OEM Part 46386-3B900

REQUEST THE BEST!
Order Genuine TeckPak-Fitzall

fitzall™ By: TeckPak USA

Automatic Cooler Line Fittings



CR-1001
5/16" Compression to Male 1/4" Pipe NPT

CR-1002
3/8" Compression to Male 1/4" Pipe NPT

CR-1007
1/2" Compression to Male 1/4" Pipe NPT



CR-1003
Male 1/4" Pipe NPT to 3/8" Hose Barb

CR-1004
Male 1/4" Pipe NPT to 5/16" Hose Barb



CR-1012
5/16" Compression Union with One Way Valve

CR-1014
3/8" Compression Union with One Way Valve

CR-1016
1/2" Compression Union with One Way Valve



CR-1005
5/16" Compression Union

CR-1006
3/8" Compression Union

CR-1009
1/2" Compression Union

METRIC

CR-1018
10MM Compression Union

CR-1019
12MM Compression Union



CR-1010
1/2" Compression to 3/8" Hose Barb

CR-1011
3/8" Compression to 3/8" Hose Barb

CR-1022
5/16" Compression to 3/8" Hose Barb

CR-1015
5/16" Compression to 5/16" Hose Barb

CR-1017
1/2" Compression to 1/2" Hose Barb

METRIC

CR-1020
10MM Compression to 3/8" Hose Barb

CR-1021
12MM Compression to 1/2" Hose Barb



CR-1008
Three Way Fitting for making parallel coolers with one line to the transmission and one each to the radiator cooler and the external cooler.

Thread Sizes are 3/8" Compression to Female 1/4" NPT with 1/4" Female NPT (on side)

RADIATOR FITTINGS

FORD '02-UP EXPLORER / TRUCK



T16996XR
Fits 3/8" Push-in Lines



T16996ZR
Fits 1/2" Push-in Lines

CHRYSLER



T22996X
1/2" Push-in for 47RE / 48RE



T22996Z
1/2" Screw In Line for '06-Up

ALLISON "QUICK CONNECT" FITTINGS



"EARLY" Line

Note: 13/16" boxed wrench will NOT slide over the Flare on the "EARLY" style Allison line!



116996FL
'01 - Early '03 5/8" Line
'01 - Early '03 Bell Housing

116996LA
'01 - Early '03 5/8" Line
Late '03 - Up Bell Housing



"LATE" Line

Note: 13/16" boxed wrench will slide over the Flare on the "LATE" style Allison line!



116996EL
Late '03 - Up 5/8" Line
'01 - Early '03 Bell Housing

116996L
Late '03 - Up 5/8" Line
Late '03 - Up Bell Housing

GM COOLER LINE FITTINGS



31284
4L60E / 4L80E
Front Clip In



31285
4L60E / 4L80E
Rear Clip In



31284G
4L60E / 4L80E
Screw In Repair



31285G
4L80E Rear
Screw In Repair



T34996GA
4L70E / 4L85E
Front Clip In



T34996G
4L85E
Rear Clip In



T34996HA
4L70E / 4L85E
Front Screw In Repair



T34996H
4L85E Rear
Screw In Repair

FORD COOLER LINE FITTINGS



FS-190
11/16"



FS-200
13/16"
5/16" Line



FS-210
11/16"



96289
13/16"
3/8" Line



T86996BR
"CASE REPAIR" Fitting
3/8" Line

CHRYSLER COOLER LINE FITTINGS



12289
3/8" Clip In

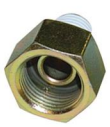

T22996D
Late 48RE
1/2" Screw In



31117C
1/2" Clip In

Visit our website@www.teckpak-fitzall.com for updated product information & instructions

REQUEST THE BEST!
Order Genuine TeckPak-Fitzall

Accessories

UNIVERSAL TRANSMISSION FILLER TUBES & STICKS

Economy TUBE and STICKS
with "LOOPED" Tops



K35999U-1
Fits all 200, 200C, 200-4R, 350, 350C and 400 transmissions, deep or shallow pan.

K77999U-1
Fits most GM's 700-R4, 4L60, 4L60E ('95 and down), plus 2.8L and 4.3L V-6 S-10 applications.

HIGH PERFORMANCE TUBE and STICKS
with "LOCKING" Tops



K35999U-HP
Fits all 200, 200C, 200-4R, 350, 350C and 400 transmissions, deep or shallow pan.

K77999U-HP
Fits most GM's 700-R4, 4L60, 4L60E ('95 and down), plus 2.8L and 4.3L V-6 S-10 applications.

FORD FILLER TUBE REPAIR END



3999U
Fits Fords only.

STEEL FILLER TUBE REPAIR END



K35999R
Fits Fords, Chrysler & GM (with GM hat seal). Made of steel so it can be braised.

UNIVERSAL DUST COVER



K35803U
Fits over 90% of GM rear wheel drive automatic transmissions, '65-'95 car and light duty trucks.

ORIGINAL EQUIPMENT & UNIVERSAL STYLE DETENT CABLES

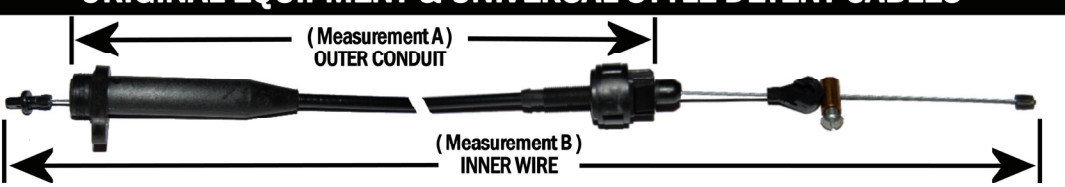

Teckpak #	Make	Style	Lower	A	B	Upper	Transmission	Engine (In Liters)
K35951	GM	OEM	Small	39	44	MS	200E 350 350C	4.1L 4.4L 5.0L 5.7L
K35955B	GM	OEM	Small	34.5	41	PT	200E 350 350C	3.2L 3.8L 4.4L 5.0L 5.7L 6.6L
K35955OEM	GM	OEM	Small	39	48	PT	200E 350 350C	3.2L 3.8L 4.4L 5.0L 5.7L 6.6L
K35955U	GM	Universal	Small	23-39	48	MS & PT	200E 350 350C	All except Late 2.5L
K65552	GM	OEM	Large	45.2	54	PT	125 200 200C 440 700	2.5E 2.8L
K65553	GM	OEM	Large	52	58	PT	125	2.8L
K65940U	GM	Universal	Large	23-44	54	PT	125 200 200C 325 440 700	All except Late 2.5L
K65950	GM	OEM	Large	26	31.5	PT	125 200 200C 325 440	1.6L 1.8L 2.0L 2.5E 2.8L 3.0L 3.8L
K77975	GM	OEM	Large	29	31.5	Metal Bar	700	Late 2.5L
K77978	GM	OEM	Large	40	48	PT	200 200C 200-4R 325 700	2.0L 2.8L 3.8L 4.3L 5.0L 5.7L 6.2L
K77978SP	GM	OEM	Large	72	84	PT	700 Mech. Modulator	
T76497B	FORD	OEM	Snap On	49	58	PT	AOD (Truck / SUV) ONLY	

SELF-ADJUSTING UNIVERSAL CABLES are AVAILABLE
K35955U-SA for 350
K65940U-SA for 700



Lower End
Small (350) = 0.458 inch Dia. Hole in Transmission
Large (700) = 0.690 inch Dia. Hole in Transmission
Snap On (AOD) = Snaps onto Detent arm on Transmission

Upper End
MS = Metal Carburetor Slide
PT = Plastic Teardrop
Metal Bar = Bar to Fit into Cam

MADE IN USA



Large GM Detent Cable Lower Repair End
K77909U
'80-Up 700-R4, 125C, 200, 200C, 200-4R, 440-T4 and 325-4L



Small GM Detent Cable Lower Repair End
K35909-1
'69-'87 350 & some 200 cables.

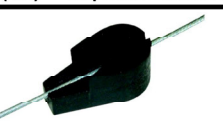

Cable End - GM Upper "Teardrop"
K35955CE
Slips over the wire and clips into place.

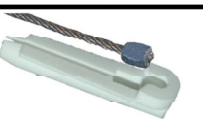

Cable End - CHRYSLER Upper "Teardrop"
T12497-1
Slips over the wire and clips into place.



Cable End Lower - Imports
67999
BM, Asian Warner, Volvo, Toyota, Jaguar, Z-F; '72-'97.

REQUEST THE BEST!
Order Genuine TeckPak-Fitzall

fitzall™ By: TeckPak USA

Detent Cables

DETENT CABLES / OEM-STYLE DETENT CABLES QUICK APPLICATION CHART

When more that one part number appears in a box, check the reference number description below for clarification.

Engine \ Trans	125	125C	200	200C	200-4R	250-250C 350-350C	440-T4	700-R4	325 325-4L	AOD Truck/Bronco
98 1.6L				K65950						
111D 1.8L				K77978						
112 1.8L		K65950								
119 1.9L				K77978						
121 2.0L		K65950		K65950				K77978		
140 2.3L						K35951				
151 2.5L	K65950	K65650(1) K65552 T77975(7)		K65650(1) K65552				K65552 T77975(7)		
178 2.8L (V6)		K65650(2) K65552 K65553		K77978			K65950(2) K65552	K77978		
181 3.0L		K65950					K65950			
189 3.1L	K65553	K65553								
196 3.2L						K35955B				
200 3.3L			K35951			K35951				
229 3.8L			K35951	K35951(3) K77978		K35955B K359550EM				
231 3.8L			K35955B(3) K35951(4)	K35955B(3) K77978	K77978	K35955B(3) K359550EM	K65950		K77978	
250 4.1L						K35951				
252 4.1L					K77978	K35955B			K77978	
260 4.1L			K35951							
262 4.3L						K35955B		K77978		
267 4.4L			K35951	K77978 K35955B	K77978	K35951 K35955B(3)				
292 4.8L						K35951				
300 (FORD)										T76497B(8)
302 (FORD)										T76497B(8)
305 5.0L			K35951	K77978 K35955B(3)		K35951(5) K35955B(6)		K77978	K77978	
307 5.0L				K77978	K77978	K35955B(6)				
350 5.7L			K35951			K35951(5) K35955B(6) K359550EM		K77978	K77978	
351 (FORD)										T76497B(8)
368 6.0L									K65950	
378D 6.2L								K77978		
400 6.6L						K35951				

(1) Export and Canada only Small
(2) Fuel Injection
(3) 1980 only
(4) 1976 and 1977 only(6)
(5) Metal carburetor attachment
(6) Plastic carburetor attachment
(7) '88-'92 (Check for Correct Length)
(8) FORD Truck / Bronco only

REQUEST THE BEST!
Order Genuine TeckPak-Fitzall

Tools



T-0162MP
FORD MODULATOR ADJUSTMENT PIN
For ALL Ford Transmissions with a modulator, gauges the exact length of pin needed.



TGM-HR
HARNESS REMOVAL TOOL
for GM & Allison Transmissions



KT3507
YOKE SEAL KIT
includes 6 seals & installation tool
Extra Seals Available 35746YS



T350-301
GM DOWEL PIN REPAIR KIT
Extra Sleeves available SM-134

T700-309
PUMP BUSHING DRIVER
200, 200C, 200-4R, 325-4L, 700-R4, 4L60 & 4L60E



T700-310
CASE BUSHING DRIVER
250, 250C, 350, 350C, 700-R4, 4L60 & 4L60E



T604-306
CHRYSLER FWD CARRIER BEARING REMOVER & INSTALLER
Fits most FWD Chryslers, 604 (41TE/41AE), A670, A470, A413 & A404.



T760
AOD SHIFT VALVE BORE SEALING TOOL



TK-56-RTD
FORD SHIFT LINKAGE PIN REMOVAL TOOL
For easy removal and replacement of Shift Pins in A4LD, 4R44, 4R55, 5R55, A0DE, AOD, 4R70W & 4R100 Transmissions.
Kit Includes (1) 3MM & (1) 1/8" Replacement Pin.

"NO MORE DAMAGED FLEXPLATES"
Stepped Pins to Fix Alignment Issues due to Worn Holes in the Case.



T518-501
TRANSMISSION ALIGNMENT PIN REPAIR
Fits: Dodge Cummins Diesel with ALLISON, 518, 48RE or 68RE Transmissions.
Pin only T22760N-P

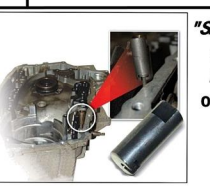

"SAVE YOUR PRNDL SWITCH" with this Slide Hammer Attachment used to Pull out those "Nailhead" type transmission pins.

T4T65-326
PIN PULLER SLIDE HAMMER ATTACHMENT
Simply INSERT, TWIST & PULL to remove those "PRNDL" pins from 4T65E, 6T70/75, 6F40/45/50/55 and other transmissions with "Nailhead" type pins.



TFD-BJR
'98-up Ford Late Model
Front Wheel Drive Ball Joint Remover
(Taurus, Windstar, Sable)



T-0154-M
MINI SLIDE HAMMER
This Slide Hammer is perfect for those tight areas! Hex shaped design allows the weigh to be used to turn the shaft. 3/8" threads on one end and 10mm on the other. Just under 2 lbs & 11 inches long.



KT12913
CHRYSLER "Steel" REVERSE PISTON PIN with INSTALLATION TOOL
Kit includes Piston Pin & Install Tool

AXLE STABILIZER INSTALLATION DRIVERS



T404-303
Fits Most Stabilizers



94125LB-TI
Fits 4T80E Stabilizer Only

SLIDE HAMMER ATTACHMENTS (3/8")



T440-308
440-T4 Servo Capsule Remover

T700-307
700 Servo Capsule Remover

T700-308
700 Servo Capsule Driver

T700-311
3/8" - 10mm Slide Hammer Adapter

SLIDE HAMMER KIT (3/8")



T350-302
For 440-T4, 4T60E & 4L60E
Remove the GM internal metal clad seals without damaging the case. This 3 piece set removes tube seals, filter seal and broken filter neck.

REQUEST THE BEST!
Order Genuine TeckPak-Fitzall

fitzall™ By: TeckPak USA

Automatic Solutions

P1870 / P1728 CODE FIT for 4L60E/65E/70E



A74741Q
For '96 - '99 with OBD / OBD II Computer

A74741QA
For '00 - '06 with OBD / OBD II Computer

A74741CB
For '05 - up with CAN-BUS Computer

SHIFT CABLE REPAIR GROMETTS



T64498-1A	GM - '07 - '13 4T60E/65E/70E (1/4" thick)
T74498-1	Early GM / Ford - Straight Pin with Groove
T74498-1A	GM - Ball/Bell Shaped Pin-head (3/8" thick)
T74498-1B	GM - '04 - '12 Colorado & Canyon
T74498-1C	GM - Ball/Bell Shaped Pin-head (1/2" thick)
T76498-1	Ford - Most '97 - '08 Trucks & '02 - '05 SUV's
T92498-1	Chrysler - Most '05 - '15 with 41TE / 62TE
T92498-T2	Chrysler / Jeep '02 - '13 Transfer Case Gromett

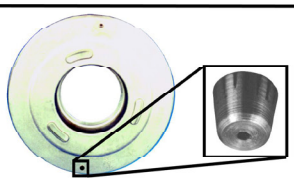

77761C
700-R4 REVERSE PISTON CAPSULE
End reverse clutch burnout & sluggish engagement.
Install our flow restricting capsule.
'87-up

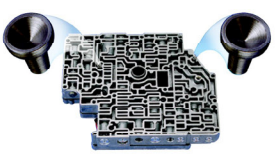

96280
CONVERTER DRAIN BACK / PRESSURE RELIEF CAPSULE
for AXODE / AX4S /AX4N
Fix for converter drain back & pressure release failures.



34446UC **76446UC**
HARNESS REPAIR CLIPS
GM 4 SPEED & ALLISON 4 & 5 SPEED
AX4S/N, AODE & 4R70W (soft wire)
Also works on Coil Packs & Injector Plugs
(Five Clips per Package)

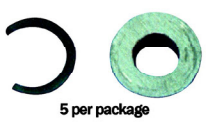

VB-101
VALVE BODY PLATE BALL SEAT
Save valve body separator plate from check ball damage. GM's & FORD with 1/4" balls.



T16494A
TRANSMISSION PAN REPAIR NUT
For 5R55S & 5R55W
Repairs the leak that developes when the drain plug spins in the case.



34270T
CASE SAVER WASHER
For TH-400, 3L80E & 4L80E
"Save a spun out case"
with the 3-Tang Case Saver Washer!

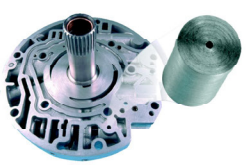

77831
TCC PUMP ORIFICE CAPSULE
For 4L60E '96- up
Prevents Lock-Up failure!



76813
ANTI-CLUNK SPRING CENTER SUPPORT
For AOD / AODE / 4R70W
Spring is curved so it rides in a different position.
Replaces OE spring / saves the center support

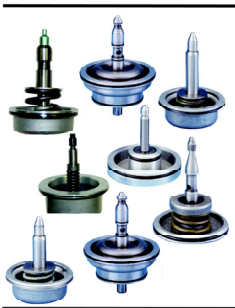

SERVO EXTENDO PINS
Extend your servo pin length in seconds!

T84908G	4T65E (Forward only)
T34913	400 & 4L80E (Reverse)
84572E	440-T4 (Both Servos)
77605E	700-R4
77605G	4L60E
65786E	200-4R (Early & Late)
96946E	AXODE (Low & Intermediate)
56605E	A4LD (Reverse only)

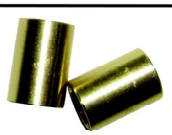

76821
4R70W VALVE BODY ALIGNMENT PIN ADAPTER
Fits: '93 - '95 Old Style Case with late model, '96-up Valve Body.



T12913
CHRYSLER REVERSE PISTON PIN
Fits: Chrysler Rear Wheel Drive.
Made of "STEEL" ... NOT Aluminum



CHRYSLER CASE BUSHING (Harness Bushing)
Allows a Late model case to be used as an Early model case.

T22916S
Fits: 40RE, 42RE, 44RE, 46RE, 47RE, 48RE, etc.



SHIFT LEVER SURE SEALS

22574SS
Fits: Chrysler 904, 727, 518, 618, 404, 417 and 470

5607SS
Fits: FORD A4LD. AODE. AOD. 4R44, 4R55, 5R55, 4R70W & 4R100



SURE SEAL BUSHING
Prevents the front seal from pushing out of the pump by retaining the fluid in the pump.

a) **65005SS**
Fits: 200, 200C, 350, 200-4R, 325-4L, 700-R4 and 4L60E.

b) **56001SS**
Fits: A4LD and C3.

REQUEST THE BEST!
Order Genuine TeckPak-Fitzall

Transmission Conversion Switch Kits

4x4 700-R4 to 350 V-8 and V-6 4.3L
NO SPEEDOMETER CHANGE NECESSARY
#7-35A '82-up
#V7-35A '82-up VAN
#7S-35C S-10 4.3L V-6, '82-up

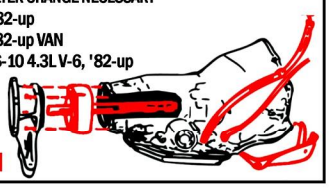

4x2 700-R4 to 350 V-8 and V-6 4.3L
NO SPEEDOMETER CHANGE NECESSARY
#7-35B '82-up
#V7-35B '82-up VAN
#7-35C '82-up CORVETTE

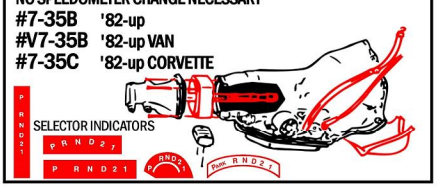

4x4 350 to 700-R4
203 TRANSFER CASE
#3-70A
Electronic Package Included

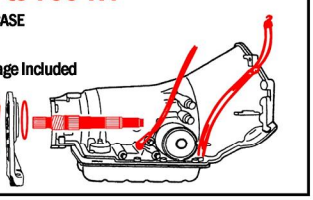

4x4 700-R4 to 400 V-8
NO SPEEDOMETER CHANGE NECESSARY
#7-40A '82- '84
#7-40C '85- up

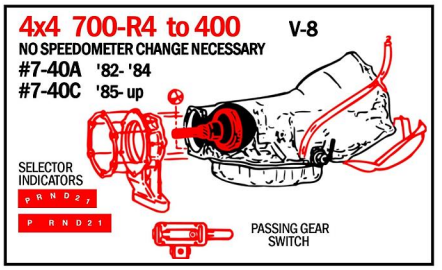

4x2 700-R4 to 400 V-8 and V-6 4.3
NO SPEEDOMETER CHANGE NECESSARY
#7-40B '82- up
#V7-40B '82- up VAN

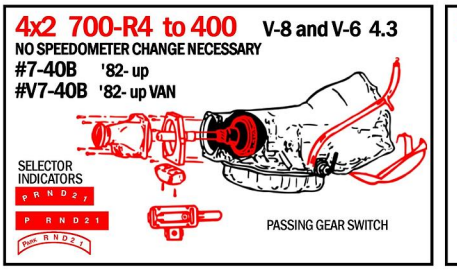

3-40C
4x4 MANUAL TRANSMISSION to 400
205 Transfer Case for
'79- '90

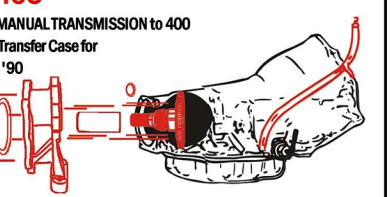

4x4 4L80E to 400
NO SPEEDOMETER CHANGE NECESSARY
#8-40A '93- '95

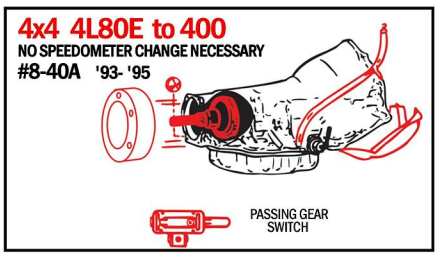

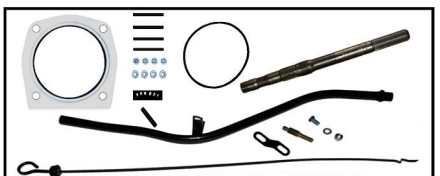

TRANS SWAP SWITCH KIT
S-350-2 (4x2)
S-350-4 (4x4)

4x2 350 to 700-R4 V-8 and V-6
ELECTRONIC PACKAGE
#3-70B

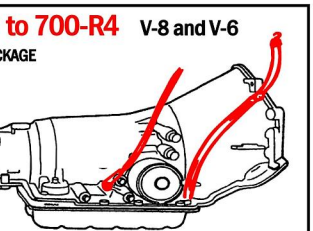

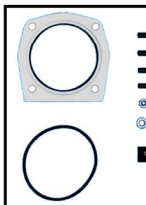

QUICK SWAP SWITCH KIT
7Q-35A (4x4)
700-R4 to NP205 Kit adds valuable inches between transfer case & transmission to allow higher angle front CV driveshaft.

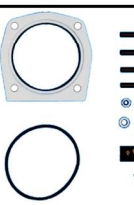

QUICK SWAP SWITCH KIT
7Q-35B (4x2)
700-R4 to 350 Kit adds valuable inches between tailhousing & transmission to allow the use of the original driveshaft.



203 ADAPTER BLOCK
3-40AB (V-8 & V-6)
4x4 350 & 400
(Transfer Case Adapter Block)



ADAPTER BLOCK
8-40AB
4x4 4L80E to 400
(Transfer Case Adapter Block)



208 ADAPTER BLOCK
7-40CB ('85- up)
4x4 400 to 208
(Transfer Case Adapter Block)



MECHANICAL MODULATOR
40M (GM)
This Mechanical Modulator is designed to take the place of the vacuum modulator on all 700-R4 to 400 6.2L diesel switch-overs.



MECHANICAL MODULATOR
C6M (FORD)
This Mechanical Modulator is designed to take the place of the vacuum modulator on C-6 and FMX applications with low or no vacuum. (Includes Mounting Hardware)

FOR KITS BELOW: Remove 700-R4, 200-4R, 200C and replace with easy to install 350 or 400.

4x4 700-R4 to 350 V-8 and V-6 4.3L
Part #7-35A '82-up, #V7-35A, '82-up VAN
Part #7S-35C S-10 4.3L V-6, '82-up

4x2 700-R4 to 350 V-8 and V-6 4.3L
Part #7-35B, '82- up #V7-35B, '82-up VAN
Part #7-35C, '82- up Corvette

200C to 350 V-8 #7-35B '82- '83 only

200-4R to 350 V-8 #2R-35A '81- up

4x4 700-R4 to 400 V-8
Part #7-40A, '82- '84 #7-40C, '85- up

4x2 700-R4 to 400
Part #7-40B, '82- up
Part #V7-40B, V-8 and V-6 4.3, '82- up VAN

4x4 700-R4 to 350 V-6 2.8 only
Part #7S-35A, '82- up, V-6 4.3, Full size kit

4x4 Manual to 400
Part #3-40C, 205 transfer case for '79- '90.

4x2 700-R4 to 350 V-6 2.8 only
Part #7S-35B, '82- up, V-6 4.3, Full size kit

4x2 200C to 350 V-6 2.8 only
Part #2S-35B, '82- '83

FOR KITS BELOW: Remove 350 & replace with easy to install 700-R4

4x4 350 to 700-R4 V-8 and V-6
Part #3-70A, 203 transfer case (Elec. Pack. Incl.)

4x2 350 to 700-R4 V-8 and V-6
Part #3-70B Electronic package only

REQUEST THE BEST!
Order Genuine TeckPak-Fitzall

fitzall™ By: TeckPak USA

Bearings

AXLE "STABILIZER" SUPPORT BEARINGS

Support Bearing & Seal Combined!

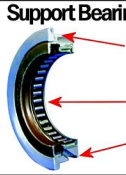

- Flange stop protects final drive housing preset
- 3000 lb. load roller bearing.
- Drain back guarantees full bearing lubrication.



COMPLETE CADILLAC AXLE KIT!

330749 (Replacement Seal)

KT94125LB
Fits: CADILLAC
Automatic:
4T80E (Left side only)

NOTE: This Complete Kit includes a New Axle. No Machining Required!



330749 (Replacement Seal)

94125LB
Fits: CADILLAC
Automatic:
4T80E (Left side only)

NOTE: Some machining of the axle's inner CV Joint is required for this unit.



L46535 (Replacement Seal)

75125LRB
Fits: GM
Automatic:
125/125C (Left & Right)
440-T4 (Right side only)
Standard:
Saginaw 4-speed & 5TM40
(Left & Right)



L46535 (Replacement Seal)

84125LB
Fits: GM
Automatic:
440-T4 '85- up
(Left side only)

NOTE: Use 75125LRB for the Right side.



330749 (Replacement Seal)

14125RB
Fits: GM
Automatic:
4T40E & 4T45E
(Right side only)

NOTE: Use 75125LRB for the Right side.



L46535 (Replacement Seal)

64125RB (Right)
84125LB-91 (Left)
Fits: GM
Automatic:
4T60E & 4T65E



15723 (Replacement Seal)

93125LRB
Fits: NISSAN
Automatic:
'82 - up Stanza, Pulsa
Standard:
'82- '90 Stanza, Pulsa



16522 (Replacement Seal)

86125LRB
Fits: FORD
Automatic & Standard:
Escort '81- up,
Topaz & Tempo '85- up,
Taurus & Sable '86- up
Lincoln Continental '89- up



330749 (Replacement Seal)

32125LRB
Fits: CHRYSLER
Automatic: (Left & Right)
A404, A413, A470, A670
Standard: (Left & Right)
A465, A525, A520, A555,
A578 - '78- up



330749 (Replacement Seal)

262125LB
Fits: CHRYSLER
Automatic:
62TE (6-speed)

INPUT SHAFT REPAIR KITS

FORD



KPBZ68HD
For 5.4L & 6.8L(V-10)
Gas Engines with
ZF Transmissions.
PBZ68HD
(Bearing & Sleeve only)



KPBZ73HD
For 6.9L & 7.3L
Diesel Engines with
ZF Transmissions.
3/4 and 1 ton only.
PBZ73HD
(Bearing & Sleeve only)

CHEVY



KPBG53HD
For 4.3, 4.8, 5.3 & 6.0L
Gas Engines '98- up
w/NP 3500 /4500
Transmissions.
PBG53HD
(Bearing & Sleeve only)



KPBC66HD
For 6.6L Diesel & 8.1L
Gas Engines '02- up
w/ZF Transmission.
PBC66HD
(Bearing & Sleeve only)



KPBG606HD
For 6.6L Diesel '98- '02
w/ZF Transmission.
PBG606HD
(Bearing & Sleeve only)

DODGE



KPBD47HD
For 3.9 & Early 4.7L Gas Engines
where the Pilot Bearing mounts
into the Flywheel.
PBD47HD
(Bearing & Sleeve only)



KPBD57HD
For 3.7L / 4.0L JEEP &
Late 4.7L / 5.2L / 5.7L / 5.9L
Dodge Gas Engines where the
Pilot Bearing mounts into the
Crank.
PBD57HD
(Bearing & Sleeve only)

Now Includes (2) Sleeves
1 = Standard size
1 = Metric size

SELF-ALIGNING PILOT BEARINGS

Avoids input shaft replacement. Installs in a new location on the damaged shaft.
Eliminates future shaft wear. Offers the smoothest shift ever!

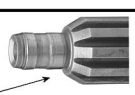

Bearing rides in a different location to avoid damaged area on shaft



PBT46HD
BMW & TOYOTA



PBH46HD
HONDA, DODGE & MITSUBISHI



PBC57HD
CHEVY RWD
4.0L & ABOVE *GAS ENGINE*

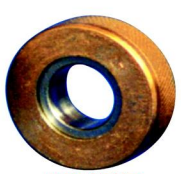

PBI46HD
ISUZU PICKUP & DODGE



PBM46HD
MERCEDES, MAZDA & VOLVO

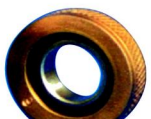

PBF50HD
FORD RWD
4.6L & ABOVE *GAS ENGINE*

Visit our website@www.teckpak-fitzall.com for updated product information & instructions

Shims Domestic Applications

Engine Size In Liters	GM Years	GM (FWD/RWD)	FORD Years	FORD FWD/RWD	CHRYSLER Years	CHRYSLER MITSUBISHI FWD/RWD	JEEP Years	JEEP
1.1								
1.2								
1.3								
1.3								
1.4					80- 84 (6 Hole)	SY46-25,50		
1.5					86- 94	SY46-25,50		
1.6			81- 85	SM420-25,50	76- 90	SY46-25,50		
1.7					78- 82	X		
1.8					88- 96	SY46-25,50		
1.9			86- 96	SF468-25,50,89 -B				
2.0	82- 89	SG628-25,50,89 -B	71- 89	SF468-25,50,89 -B	78- 90/94- 04	SY46-25,50		
2.0	87- 94 (HO)	SG643-25,50						
2.2	90- 02	SG628-25,50,89 -B	86- 92	SM420-25,50	82- 04	SY46-25,50	64- 70	X
2.2								
2.3			74- 97	SF468-25,50,89 -B				
2.3	89- 94	SG628-25,50,89 -B	01- up	SM420-25,50				
2.4	96- 02	SG628-25,50,89 -B			90- 94	SY46-25,50	02- up	SG628-25,50,89 -B
2.4					00 -06	SY46-25,50		
2.5					86- 02	SY46-25,50		
2.5	77- 90	SG628-25,50,89 -B	86- 91/98- 01	SF468-25,50,89 -B			80- 98	SG628-25,50,89 -B
2.6					78- 90	SY46-25,50		
2.7					02- up	SY46-25,50		
2.8	82- 93	SG628-25,50,89 -B					84- 86	SG628-25,50,89 -B
2.9			86- 90	SF629-25,50				
3.0			86- 97 (6 Hole)	SF468-25,50,89 -B	88- 94/02- 04 (6 Hole)	SY46-25,50		
3.0	82- 88	SC857-25,50,89 -B	98- 08 (8 Hole)	SF340-25,50	92- 96 (8 Hole)	X		
3.1	82- 93	SG628-25,50,89 -B						
3.2	62- 67	SC857-25,50,89 -B			04- 06	X		
3.3	89- 93	SC857-25,50,89 -B			90- up	SY46-25,50		
3.4	91- 97	SG628-25,50,89 -B						
3.5					93 up	SY46-25,50		
3.7					60- 86	SY852-25,50,89 -B		
3.7					02- up	X	02- up	X
3.8	78- 89	SG628-25,50,89 -B	82- 03	SF468-25,50,89 -B	92- up	SY46-25,50	07- up	X
3.9	54- 63	SC857-25,50,89 -B	65- 70	SF468-25,50,89 -B	88- 02	SY852-25,50,89 -B		
4.0			90- 97 (6 Hole)	SF629-25,50			88- 06	SY852-25,50,89 -B
4.0			98- up (8 Hole)	SF340-25,50				
4.1	75- 84	SC857-25,50,89 -B	69- 80	SF468-25,50,89 -B				
4.2			97- 07	SF468-25,50,89 -B			72- 90	X
4.2							91 -up	SY852-25,50,89 -B
4.3	98- up	SC866-25,50,89						
4.3	84- 97	SG643-25,50						
4.6			91- 97 (6 Hole)	SF468-25,50,89 -B				
4.6			98- up (8 Hole)	X				
4.7			63- 68	SF468-25,50,89 -B	00- up	SY852-25,50,89 -B	99	X
4.8	98- up	SC866-25,50,89						
4.9			65- 96	SF468-25,50,89 -B				
5.0	76- 92	SC857-25,50,89 -B	68- 00	SF468-25,50,89 -B			72- 80	X
5.2					60- 02	SY852-25,50,89 -B		
5.3								
5.3	98- up	SC866-25,50,89						
5.4	62- 69	SC857-25,50,89 -B	97- 99 (6 Hole)	SF468-25,50,89 -B			66- 70	X
5.4			99- up (8 Hole)	X				
5.6					68- 72	SY852-25,50,89 -B		
5.7	67- 04	SC857-25,50,89 -B	(WINDSOR)	SF460-25,50,89 -B	04- up	SY810-25,50,89	68- 70	X
5.8			69- 91	SF468-25,50,89 -B				
5.9			68- 76	SF460-25,50,89 -B	88- 06 Diesel	SY810-25,50,89	72- 84	SY852-25,50,89 -B
5.9					72- 04 (8 cly Gas)	SY852-25,50,89 -B		
6.0	70- 81	SC857-25,50,89 -B						
6.0	98- up	SC866-25,50,89	03- up Diesel	X				
6.2	82- 93 Diesel	SC857-25,50,89 -B						
6.3					62- 71	SY852-25,50,89 -B		
6.4			61- 75	SF460-25,50,89 -B				
6.5	65- 69	SC857-25,50,89 -B			72- 80	SY852-25,50,89 -B		
6.5	93- 01 Diesel	SC857-25,50,89 -B						
6.6	70- 72	SC857-25,50,89 -B					74- 78	X
6.6	98- up Diesel	SC866-25,50,89	68- 79	X				
6.7	70- 80	SC857-25,50,89 -B						
6.8			97- up (10 Cyl)	X				
6.9			83- 88 Diesel	SF460-25,50,89 -B				
7.0	66- 69	SC857-25,50,89 -B			68- 71	X		
7.2					70- 80	SY852-25,50,89 -B		
7.3			92- 03 Diesel	SF460-25,50,89 -B				
7.4	70- 97	SC857-25,50,89 -B (NOT 455)						
7.5			68- 86	SF460-25,50,89 -B				
8.0					92- 02	SY810-25,50,89		
8.1	98- 06	SC857-25,50,89 -B						
8.3					04- up	SY810-25,50,89		

LEGEND: X = No Shim Available **-25 = 0.025 inch thick** **-50 = 0.050 inch thick** **-89 = 0.089 inch thick**

REQUEST THE BEST!
Order Genuine TeckPak-Fitzall

fitzall™ By: TeckPak USA

Shims Import Applications

Engine Size In Liters	Honda Years	Honda	Toyota Years	Toyota	Nissan Years	Nissan	Mazda Years	Mazda
1.1							70- 82 (Wankel)	X
1.2	73- 79	SH40-25,50			72- 90	SN418-25,50	70	SM420-25,50
1.3	81- 87	SH40-25,50			74	SN418-25,50	74- 78	SM420-25,50
1.3							84- 92/04- up (Wankel)	X
1.4					76- 82	SN418-25,50	80	SM420-25,50
1.5	75- 00	SH40-25,50	80- 04	ST46-25,50 -B	80- 84	SN418-25,50	82- 84 / 96- 98	SM420-25,50
1.6	76- 00	SH40-25,50	72- 97/90- 97 Prizm, Sidekick	ST46-25,50 -B	67- 98	SN418-25,50	96- 94	SM420-25,50
1.7	01- 05	X			84- 86	SN418-25,50		
1.8	79- 85 (6 Hole)	SH40-25,50	80- 94 (6 Hole)	ST46-25,50 -B	74- 88 (6 Hole)	SN418-25,50	78 / 90- 04	SM420-25,50
1.8	06- up (8 Hole)	X	93- 97 Prizm & Vibe 94- 07 (8 Hole)	ST46-25,50 -B	00- up (8 Hole)	X		
1.9			66- 70	ST46-25,50 -B				
2.0	84- up	X	72- 88 (6 Hole)	ST46-25,50 -B	74- 00	SN418-25,50	94- up	SM420-25,50
2.0			86- 04 (8 Hole)	ST46-25,50 -B				
2.2	92- up	X	76- 86 (6 Hole)	ST46-25,50 -B	76- 82	SN418-25,50	82- 92	SM420-25,50
2.2			90- 00 (8 Hole)	ST46-25,50 -B				
2.3	92- up	X	70- 72	ST46-25,50 -B			94- 96	SM420-25,50
2.3							02- 08	SF468-25,50 -B
2.4	03- up	X	80- 94 (6 Hole)	ST46-25,50 -B	70- 02 (6 Hole)	SN418-25,50		
2.4			92- 06 (8 Hole)	ST46-25,50 -B	94- 00 (8 Hole)	X		
2.5					84- 94 (6 Hole)	SN418-25,50	94- 02	SM420-25,50
2.5			88- 90		00- 06 (8 Hole)	X		
2.6	94- up	X	72- 80	ST46-25,50 -B	74	SN418-25,50	88- 92	SM420-25,50
2.7			94- up	ST46-25,50 -B				
2.8			80- 88	ST46-25,50 -B	76- 82	SN418-25,50		
3.0	03- up	X	84- 92 (6 Hole)	ST46-25,50 -B	84- 96 (6 Hole)	SN418-25,50	88- 90	SM420-25,50
3.0			88- 00 (8 Hole)	ST46-25,50 -B	92- 00 (V-6)	X	94- up (2 Piece)	X
3.2	94- 02	X						
3.3					96- 04	SN418-25,50		
3.4			97- 04	ST46-25,50 -B				
3.5					02- 06	X		
3.9			68- 74 (LandCruiser)	X				
4.0			06- up	ST46-25,50 -B	06- up	X	92- 96	SF629-25,50
4.0							98- up	SF340-25,50
4.2			76- 86 (LandCruser)	X				

LEGEND: X = No Shim Available **-25 = 0.025 inch thick** **-50 = 0.050 inch thick** **-89 = 0.089 inch thick**

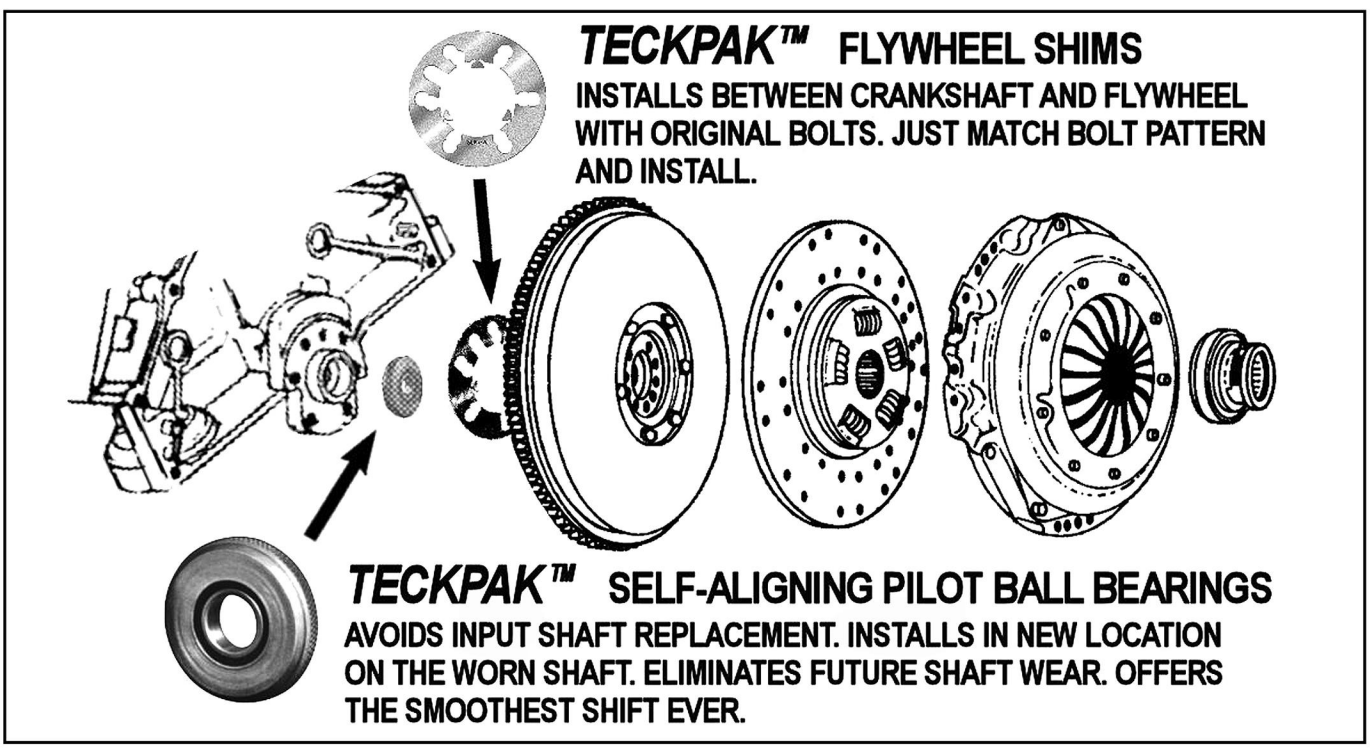

REQUEST THE BEST!
Order Genuine TeckPak-Fitzall

"CONNECT WITH THE BEST"

Posi-Products®

Posi-Lock® Connector

Posi-Lock Connectors have been put to the test worldwide since 1997. Superior In-Line splices with just hand tightening! The connector of choice from Automotive OEM's to our US Military.

EASY AS ① ② ③

① Strip wire 1/2".

② Insert

③ Hand tighten

CONNECTION COMPLETE!



TYPE	TECKPAK PRODUCT	TECKPAK#
Posi Lock	Connect 18-24 gauge wires at each end	PL1824
Posi Lock	Connect 12-18 gauge wires at each end	PL1218
Posi Lock	Connect 14-16 gauge wires at each end	PL1416
Posi Lock	Connect 8-10 gauge wires at each end	PL0810

Posi-Tap®
TAP CONNECTOR



- TAPS WIRES WITHOUT CUTTING
- TOTAL WIRE INTEGRITY IS MAINTAINED
- INSTALLS IN SECONDS BY HAND
- NO CRIMPING OR TOOLS REQUIRED
- REUSABLE OR PERMANENT
- LESS RESISTANCE
- VIBRATION PROOF
- FULLY INSULATED

POWERS UP TO (4) LEADS AT ONCE!

QUICK & EASY

① Insert Hot Wire

② Tighten

③ Strip Leads

④ Insert & Tighten



TYPE	TECKPAK PRODUCT	TECKPAK#
Posi Tap	Tap 20-22 gauge wire	PTA2022M
Posi Tap	Tap 16-18 gauge wire	PTA1618
Posi Tap	Tap 12-18 gauge wire	PTA1218
Posi Tap	Tap 10-12 gauge wire	PTA1012

Posi-Twist®
NON IN-LINE CONNECTIONS



QUICK & EASY!

① Strip wire 1/2"

② Twist

③ Insert

④ Hand tighten

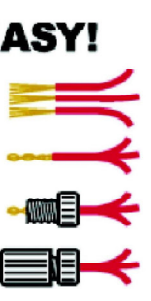



TYPE	TECKPAK PRODUCT	TECKPAK#
Posi Twist	Connect multiple 20-26 gauge wires	PT2026
Posi Twist	Connect multiple 14-24 gauge wires	PT1424
Posi Twist	Connect multiple 10-22 gauge wires	PT1022

Posi-Tite®
WATERTITE CONNECTOR



The World's First No Crimp, Reusable, Watertite Connector.

The Test Results Are In!
Posi-Tite is still exceeding our tests at over 12 months of submersion. They have been abused & re-used over 100 times.

There's More...
Did we mention this is all done without crimping or tools? A Perfect connection anywhere by anyone, guaranteed!

Don't just take our word...
We'll send you a sample in a test tube of colored water as per SAE/USCAR-2 5.6.5 Submersion Test.

QUICK & EASY

① Strip wire 3/8" & pass through cap.

② Push wire while twisting seal. Bare wire end should protrude through clear wire guide & insulation into seal.

③ Handtighten to threaded female. Repeat for other side.

④ DONE!



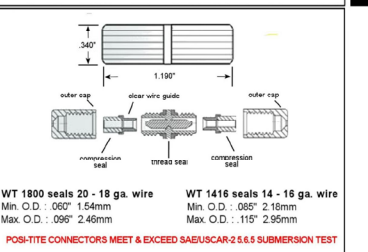

WT 1800 seals 20 - 18 ga. wire
Min. O.D. : .060" 1.54mm
Max. O.D. : .096" 2.46mm

WT 1416 seals 14 - 16 ga. wire
Min. O.D. : .085" 2.18mm
Max. O.D. : .115" 2.95mm

POSI-TITE CONNECTORS MEET & EXCEED SAE/USCAR-2 5.6.5 SUBMERSION TEST

TYPE	TECKPAK PRODUCT	TECKPAK#
Posi Tite	Connect 18-20 gauge wires at each end	WT1820
Posi Tite	Connect 14-16 gauge wires at each end	WT1416

Posi-Lock, Posi-Tap, Posi-Twist, Posi-Tite, are Registered Trademarks of Posi-Products.
ALL PRODUCTS ARE PATENTED 5,228,875 5,695,369 5,868,589 2,708,1556,568952 2,624,792 2,654,610 6,488,548B16,494,753B1 2,130,398 2,361,052 2,382,7322,481,667 6,358,103B1 2,275,493 2,570,4932,607,462 D478,555S 6,692,313 6,695,6532,840,505 6,796,863B1 6,814,630B1, 6,830,491Jap 2881414 Aus708700 729 018 761530Tia 103534 121365 152770 Can2.204.826 Mex200626 ChinaZL98805391.8 and others pending

REQUEST THE BEST!
Order Genuine TeckPak-Fitzall

fitzall™ By: TeckPak USA

NEW PARTS!

ASK FOR GENUINE fitzall PARTS

INNOVATIVE PROBLEM SOLUTION

FOR THE PROFESSIONAL TRANSMISSION REBUILDER

Top Quality Parts, Quick Easy Installation and Time Saving Applications

SHIFT CABLE REPAIR GROMETTS



GM SHIFT CABLE REPAIR GROMMET

Fits: '07-'13 4T60E, '07-'11 4T65E & 4T70E
Note: ¼" thick cable head and the hole in the cable is larger than 13/32"

T64498-1A



GM SHIFT CABLE REPAIR GROMMET

Fits: GM vehicles that have a 3/8" thick head and a "Ball" or "Bell" shaped tip on the shift lever pin.

T74498-1A



GM SHIFT CABLE REPAIR GROMMET

Fits: GM '04 - '12 Colorado & Canyon
Note: will have a "Ball" or "Bell" shaped tip on the shift lever pin.

T74498-1B



GM SHIFT CABLE REPAIR GROMMET

Fits: GM vehicles with a 1/2" thick head and a "Ball" or "Bell" shaped tip on the shift lever pin.

T74498-1C



GM/FORD SHIFT CABLE REPAIR GROMMET

Fits Earlier GM and some FORD Vehicles with a Grooved Straight Type Pin on the Shift Lever.

T74498-1



FORD SHIFT CABLE REPAIR GROMMET

Fits Most ('97-'08) FORD Trucks & ('02-'05) Explorer, Expedition, Navigator & Mountaineer

T76498-1



CHRYSLER SHIFT CABLE REPAIR GROMMET

Fits Most ('05-'15) CHRYSLER, DODGE & JEEP with 41TE or 62TE Transmission.

T92498-1



CHRYSLER TRANSFER CASE REPAIR GROMMET

4x4 TRANSFER CASE LINKAGE REPAIR CLIP...
Fits '02 - '13 CHRYSLER, DODGE & JEEP

T92498-T2

PROBLEM SOLVED!

DETENT CABLE - REPAIR CLIP for CHRYSLER, DODGE, PLYMOUTH & JEEP!
('92 -'04 RWD Vehicles)

DON'T REPLACE THE CABLE... FIX IT!
Just slides over the wire and clips into place!

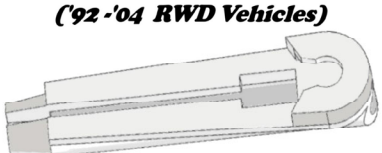

T12497-1

"Upper" REPAIR CLIP

Visit our website@www.teckpak-fitzall.com for updated product information & instructions

ELECTRONIC SOLUTIONS

fitzall™ By: TeckPak USA

HYUNDAI-KIA 6-SPEED TRANSMISSIONS

A6GF, A6MF & A6LF

Available for 2009 - up

SOLENOIDS









T211425A
TCC, 2-6 ('09-up)
OE# 46313-3B675

T211450C
2-6 ('09-'13)
OE# 46313-3B075

T211425B
TCC, 2-6 ('09-up)
OE# 46313-3B673

T211425AA
TCC, 2-6 ('14-up)
OE# 46313-3B770

T211425C
TCC, 2-6 ('09-up)
OE# 46313-3B073

T211425CA
TCC, 2-6 ('14-up)
OE# 46313-3B170

T211428A
LINE PRESSURE ('09-up)
OE# 46313-3B600

T211421A
A/B SHIFT ('09-up)
OE# 46313-3B030
NOTE: also fits A8LR

T211427A
OD, UD, 3-5 / R ('09 - '13)
OE# 46313-3B661

T211427AA
OD, UD, 3-5 / R ('14 - up)
OE# 46313-3B762

T211450CA
OD, UD, 3-5 / R ('14 - up)
OE# 46313-3B160

SPEED SENSORS

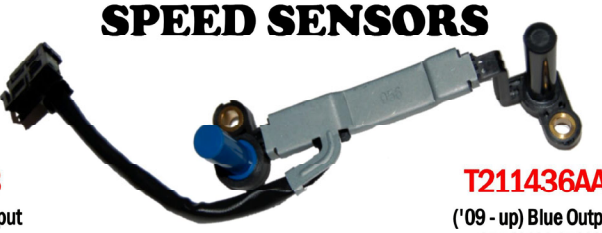

T211436B
('09 - up) Black Output
OE# 42620-3B100

T211436BA
('09 - up) Green Output
OE# 42620-3B110

T211436BB
('09 - up) Gn/Blk Output
OE# 42620-3B310

T211436AA
('09 - up) Blue Output
OE# 42620-3B600

T211436AB
('09 - up) Natural Output
OE# 42620-3B610

T211436AC
('09 - up) Gray Output
OE# 42620-3B620

INHIBITOR SWITCHES



T211410A
('09 - up)
5 pins
OE# 42700-3B000

T211410B
('09 - up)
8 pins
OE# 42700-26700

TEMPERATURE SENSORS



T211437A
('09 - up)
OE# 46386-3B900

HARNESSES



T211446A
('09 - up)
Black Connector End
OE# 46307-3B650

T211446B
('09 - up)
Gray Connector End
OE# 46307-3B050

NOTES

© Whatever It Takes Transmission Parts. Inc.

NOTES

© Whatever It Takes Transmission Parts. Inc.

SUPERIOR Innovation
Simple 5R110W Solutions

NOW AVAILABLE: 2 Superior 5R110W Pump Upgrade Kits

The "Original" part # STL-5R110W Pump Upgrade Kit and the NEW part # STL-5R110W-OS for oversized* P.R. bore both with Patent Pending Sure-Cool® Flow~Control Technology
*Part # STL-5R110W-OS (fits approx. bore size .768")

TransLab Engineered® 5R110W Sure-Cool® Flow~Control System replaces the failing OEM Thermal Bypass and provides full time cooler flow while achieving much lower average fluid temperatures via our patent pending and proprietary Flow~Teck® flow calibration system. Built-in high pressure safety bypasses into the lube circuit (if restricted) thus saving critical parts on meltdown due to cooler/flow blockage. Moreover immediate cooler flow allows an accurate ATF level check w/o warm-up and it SAVES TECHNICIANS wait time to check and recheck fluid level (approx. 45 min per unit).

Patent pending, our proprietary Pressure Regulator Valve design Provides: Stabilized, Fine-tuned regulation which shortens valve cycling for reduced bore wear (eliminates 20-60 PSI needle bounce on gauge) features Drop-in and GO™ design utilizes unworn part of bore for "NO~REAM"™ Installation. Includes Modified TC & cooler flow (especially at high PSI demand) re-calibrated TC limit and TCC Control for improved L/U, and increased Tow-haul capacity when hot. Universal EPC Relief prevents runaway line, case breakage and combats uncontrolled boost from pump cross-leaks.



PART# STL-5R110W

STL008 5R110W Internal Upgrade Kit

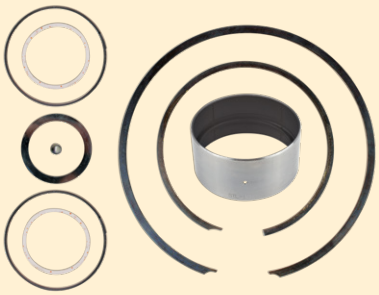

PART# STL008

The NEW STL008 features:
- Patent-pending Super-sized Direct Drum Bushing w/CT-101 coating
- State-of-the-art lube flow design, making it unique and non-obvious
- Includes proprietary direct drum sealing rings, solid fwd. drum sealing rings, 2 SuperTuff® snap rings, support shim and cup plug for clearing debris build-up in the blind hole passage.

5R110W SuperTuff® Output Shaft Pilot Bushings



PART# K0143



Our New K0143 for 5R110W SuperTuff® Output shaft pilot bushings w/ Teflon® coating (Inc. 3 fixes per kit) Replaces the forward drum pocket bushing to output shaft pilot and utilizes a Teflon® coated, steel backed SuperTuff® bushing.

SUPERIOR
TRANSMISSION PARTS, INC.®
THE SIMPLE SOLUTION

VISIT OUR NEW INTERACTIVE WEBSITE:
www.superiortransmission.com
Superior Transmission Parts, Inc. superiortrans1
Phone: 1-800-451-3115 x207 sales
International: 850-574-2369 x207 sales

ASK FOR

Hi-Per Blue®



Superior thermal and chemical resistance with better fit and performance.

Hi-Per Blue® pistons, engineered exclusively by Seal Aftermarket Products, are manufactured with blue AEM (ethylene acrylic elastomer) , a very high performance material offering superior compressive stress relaxation, dynamic fatigue resistance, vibration dampening, and resistance to acid condensates.

Seal Aftermarket Products portfolio:

SEAL AFTERMARKET PRODUCTS · TOLEDO TRANS-KIT · VOLT Electronics · THE BEAST · Hi-Per Blue · TK MAXX



THE SYSTEM IS SONNAX

Sonnax products and the people that stand behind them are part of a unique system trusted for decades to overcome even the most challenging transmission problems.

Don't risk a comeback with parts that can't deliver reliable, effective, top-quality repairs. From innovative components to top-notch product support, you can always rely on Sonnax to get you through your next rebuild.

sonnax®

Visit www.sonnax.com for details. • 800-843-2600 • 802-463-9722

MARMON A Marmon/Berkshire Hathaway Company